COMMITTENTE:

RFI RETE FERROVIARIA ITALIANA
GRUPPO FERROVIE DELLO STATO ITALIANE

DIREZIONE LAVORI:

ITALFERR
GRUPPO FERROVIE DELLO STATO ITALIANE

APPALTATORE:

webuild Implenia
CONSORZIODOLOMITI

PROGETTAZIONE:

MANDATARIA:

SWS

MANDANTI:

PINI ITALIA
GDP GEOMIN
S.I.F.E.L. S.p.A.
SISt Studio di Ingegneria Strutturale Organte & Bortot

IL DIRETTORE DELLA PROGETTAZIONE:
Ing. Paolo Cucino

Responsabile integrazione fra le varie prestazioni specialistiche

ORDINE DEGLI INGEGNERI DELLA PROV. DI TRENTO
Dott. Ing. PAOLO CUCINO
ISCRIZIONE ALBO N° 2216

PROGETTO ESECUTIVO

PROGETTAZIONE ESECUTIVA ED ESECUZIONE DEI LAVORI DI REALIZZAZIONE DEL LOTTO 1 DEL QUADRUPLICAMENTO DELLA LINEA FERROVIARIA FORTEZZA-VERONA

TRATTA "FORTEZZA – PONTE GARDENA"

RELAZIONE

11 - OPERE CIVILI

C2-INTERVENTI DI INSERIMENTO PAESAGGISTICO INFRASTRUTTURA A PONTE GARDENA

STRUTTURALI - Adeguamento BA su Ponte Rio Gardena

Relazione di calcolo - Opere in elevazione

APPALTATORE		SCALA:
IL DIRETTORE TECNICO Ing. Pietro Gianvecchio		-

COMMESSA	LOTTO	FASE	ENTE	TIPO DOC.	OPERA/DISCIPLINA	PROGR.	REV.
IB0U	1B	E	ZZ	CL	BA0900	002	C

Rev	Descrizione	Redatto	Data	Verificato	Data	Approvato	Data	Autorizzato Data
C	Emissione	D.Neri	15/12/2021	L.Paone	31/12/2021	D.Buttafoco (Dolomiti)	19/01/2022	IL PROGETTISTA P.Cucino
B	Emissione a seguito di commenti Committenza	D. Neri	18/07/2022	L. Paone	19/07/2022	D. Buttafoco (Dolomiti)	20/07/2022	
C	Emissione a seguito di commenti Committenza	C. Pepe	03/03/2023	L. Paone	03/03/2023	D. Buttafoco (Dolomiti)	03/03/2023	30/07/2022
File: IB0U1BEZZCLBA0900002B.docx								n. Elab.: -

ORDINE DEGLI INGEGNERI DELLA PROV. DI TRENTO
Dott. Ing. PAOLO CUCINO
ISCRIZIONE ALBO N° 2216

SOMMARIO

1. PREMESSA E DESCRIZIONE DELL'OPERA 5

2. SCOPO E CONTENUTI DEL DOCUMENTO 9

2.1 UNITÀ DI MISURA 9

2.2 SINTESI DELLE ANALISI E DELLE VERIFICHE RIPORTATE 9

3. NORMATIVA, ELABORATI DI RIFERIMENTO E SOFTWARE UTILIZZATI 10

3.1 DOCUMENTI DI RIFERIMENTO 10

3.2 SOFTWARE IMPIEGATI 11

3.3 ELABORATI DI RIFERIMENTO 11

4. MATERIALI 13

4.1 CALCESTRUZZO SOLETTA PASSERALLA 14

4.2 BASAMENTI: SPALLA E MENSOLA 15

4.3 CALCESTRUZZO MAGRO 16

4.4 ACCIAIO IN BARRE PER OPERE IN C.A. 16

4.5 ACCIAIO PER CARPENTERIA METALLICA 17

4.6 CONNETTORI A PIOLO 17

4.7 CLASSI DI ESPOSIZIONE E COPRIFERRI 18

5. CARATTERIZZAZIONE GEOTECNICA 21

6. CARATTERIZZAZIONE SISMICA 21

7. DESCRIZIONE DEL SOFTWARE IMPIEGATO 24

7.1 STRAUS RELEASE 2.4.6 24

7.1.1 Fasi generali di calcolo 24

7.1.2 Elementi "BEAM" 25

7.1.3 Elementi "PLATE" 27

8. CRITERI GENERALI DI VERIFICA 30

8.1 STRUTTURE IN CALCESTRUZZO ARMATO 30

8.1.1 Valutazione della sicurezza e metodo di analisi 30

8.1.2 Coefficienti di sicurezza lato materiale 30

8.1.3 Resistenze di calcolo dei materiali e caratteristiche meccaniche 30

8.1.4 Verifiche agli SLU delle sezioni per flessione e sforzo normale retta (elementi monodimensionali) ... 31

8.1.5 Verifiche agli SLU delle sezioni per taglio con armatura 32
8.1.6 Verifiche agli SLU per mensole tozze 33
8.1.7 Verifiche agli SLE per tensioni 34
8.1.8 Verifiche agli SLE per fessurazione 34
8.2 STRUTTURE IN CARPENTERIA METALLICA 36
8.2.1 Valutazione della sicurezza e metodo di analisi 36
8.2.2 Coefficienti di sicurezza lato materiale 36
8.2.3 Verifiche agli SLU delle membrature 36
8.2.4 Verifiche agli SLU delle saldature 36
8.2.5 Verifiche agli SLU delle unioni bullonate 36
9. DESCRIZIONE DEL MODELLO FE 38
9.1 IPOTESI 38
9.2 CARATTERISTICHE GEOMETRICHE E VINCOLI 39
9.2.1 Modello R10 39
9.2.2 Modello R12 42
9.3 ANALISI DEI CARICHI E APPLICAZIONE AL MODELLO FE 44
9.3.1 Carichi permanenti 44
9.3.2 Carichi variabili 46
9.3.3 Q02 – Azione del Vento 50
9.3.4 Effetti aerodinamici associati al passaggio dei convogli 54
9.3.5 T00 e T01 – Azioni Termiche 62
9.3.6 Combinazioni Di Carico 64
10. RISULTATI DELLE ANALISI E VERIFICHE STRUTTURE DI ELEVAZIONE 72
10.1 RISULTATI DELL'ANALISI SISMICA 72
10.2 VERIFICHE DI RESISTENZA 77
10.2.1 Piastra portante getto 77
10.2.2 Soletta 78
10.2.3 Trave principale 80
10.2.4 Montante Barriera Antirumore 89
10.2.5 Trave di copertura Barriera Antirumore 93
10.2.6 Controvento longitudinale di piano 95

10.2.7 Controvento diagonale di piano 97
10.3 VERFICHE DI DEFORMABILITÀ 99
10.3.1 Montanti 99
10.3.2 Travi di copertura 100
10.3.3 Travi principali 101
11. VERIFICHE APPARECCHI DI APPOGGIO E RITEGNI SISMICI 104
11.1 PREMESSA 104
11.2 FORZE SUGLI APPOGGI 105
11.3 VERIFICA APPARECCHIO DI APPOGGIO 109
11.4 SPOSTAMENTI AGLI APPOGGI 110
11.5 VERIFICA BAGGIOLI 111
11.6 VERIFICA RITEGNI SISMICI 112
12. VERIFICHE SOTTOSTRUTTURE 116
12.1 PREMESSA 116
12.2 AZIONI ALLA BASE DELLE SPALLE 117
12.3 MENSOLA BA-01 120
12.4 SPALLA BA-03, BA-04 121
12.5 SPALLA BA-02 123
13. SCALE IN C.A. 124
13.1 DESCRIZIONE GENERALE DELLE STRUTTURA 124
13.2 ANALISI E VERIFICHE 124
13.2.1 Caratteristiche meccaniche dei materiali 124
13.2.2 Modellazione delle strutture ed analisi 125
13.2.3 Verifica sezione in mezzeria della soletta 129
13.2.4 Incidenza di armatura 130
14. APPENDICE – OUTPUT DI CALCOLO 131

1. PREMESSA E DESCRIZIONE DELL'OPERA

La presente relazione ha per oggetto le verifiche strutturali delle opere di scavalco del Rio Gardena previste nell'ambito dei lavori di "Quadruplicamento ferroviario della linea Fortezza – Verona – Lotto 1 Fortezza – Ponte Gardena". Lo scavalco si colloca tra le progressive 172+274.31 e 172+302.12 (Binario Pari).

Lo scavalco viene realizzato in corrispondenza del ponte esistente, tra il muro Zona 1 e la galleria artificiale.

La struttura in progetto è realizzata per consentire il montaggio delle nuove barriere antirumore e l'accesso alla massicciata ferroviaria per scopi manutentivi o similari.

Si riporta di seguito uno stralcio planimetrico per la localizzazione dell'opera.

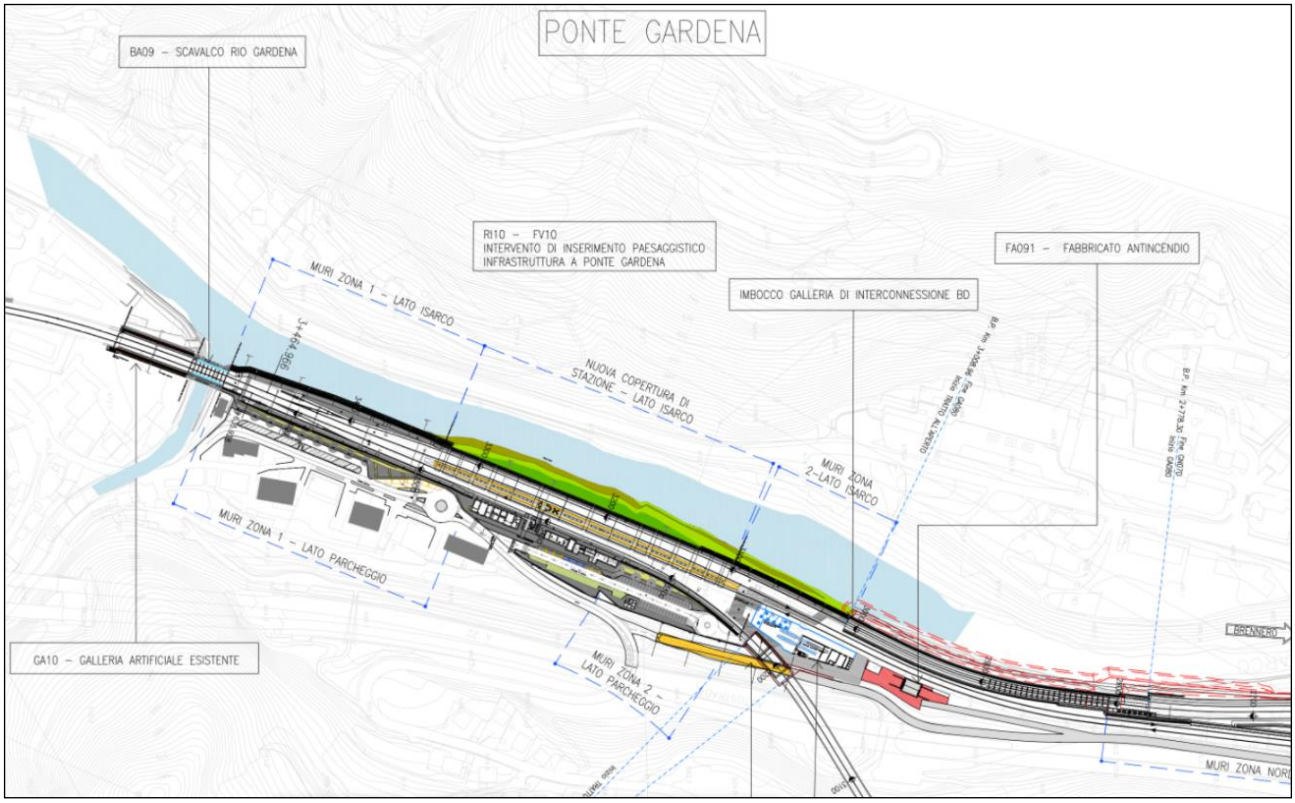

Figura 1-1: *Planimetria.*

Lo scavalco Rio Gardena viene realizzato in corrispondenza del ponte esistente, tra il muro zona 1 e la galleria artificiale GA10.

L'opera è composta da n. 10 portali posti ad interasse di 3m composti da montanti sono realizzati con profilati HEM 360 mentre la trave di copertura è realizzata con profilati HEB 360.

Tali portali sono collegati a livello della copertura da un sistema di controventamento di piano costituito controventi longitudinali UPN300 e controventi a corce L60x6.

I portali poggiano su una coppia di travi di lunghezza complessiva pari a 28m (luce appoggi 27m) e realizzate con sezione a doppio T, composta e saldata, con le seguenti caratteristiche geometriche:

- Altezza totale = 1400 mm;
- Larghezza piattabanda superiore = 500 mm;
- Larghezza piatabanda inferiore = 500 mm;
- Spessore piattabanda superiore = 40 mm;
- Spessore piattabanda inferiore = 40 mm;
- Spessore anima = 20 mm.

Le due travi principali sono a loro volta collegate da traversi composti da piatti saldati posti ad interasse di 3 metri a formare una struttura reticolare viereendel per sollecitazioni nel piano.

Le dimensioni dei traversi sono:

- Altezza totale = 1400 mm;
- Larghezza piattabanda superiore = 500 mm;
- Larghezza piatabanda inferiore = 500 mm;
- Spessore piattabanda superiore = 30 mm;
- Spessore piattabanda inferiore = 30 mm;
- Spessore anima = 20 mm.

Le travi longitudinali poggiano da un lato su spalle in calcetruzzo armato fondate su micropali, mentre dall'altro lato su mensole in c.a. realizzate sul muro della galleria.

Le travi principali sostengono, oltre alla barriera fonoassorbente, anche una soletta in c.a. di spessore 15 cm.

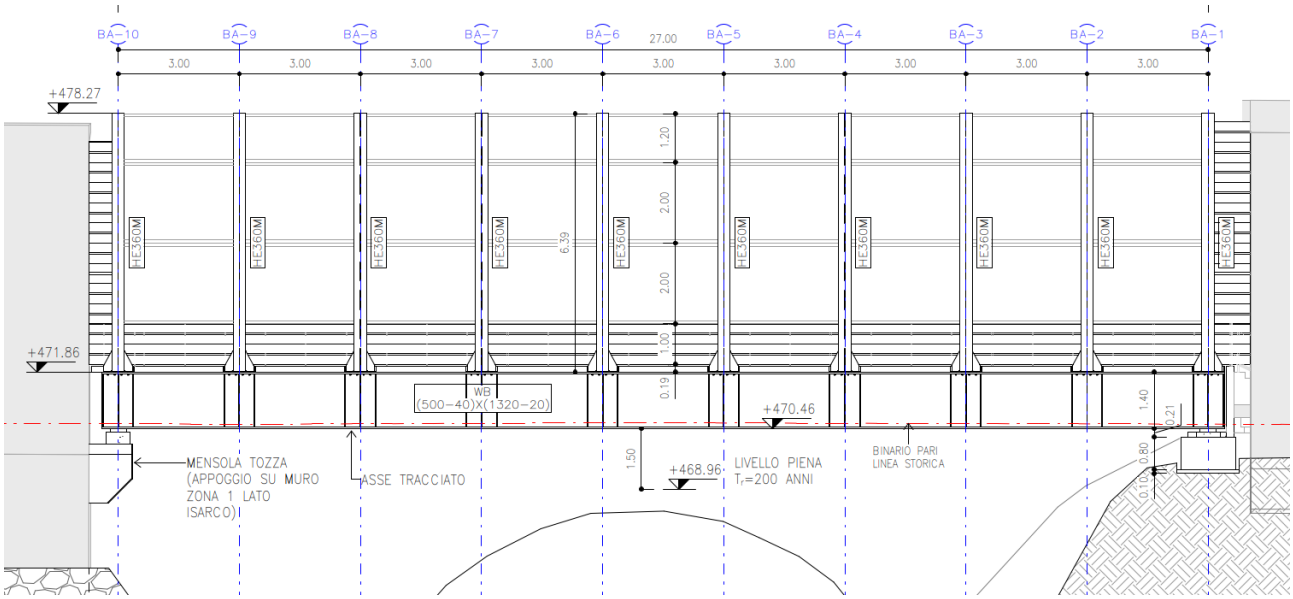

Figura 1-2: *Prospetto Lato Isarco*

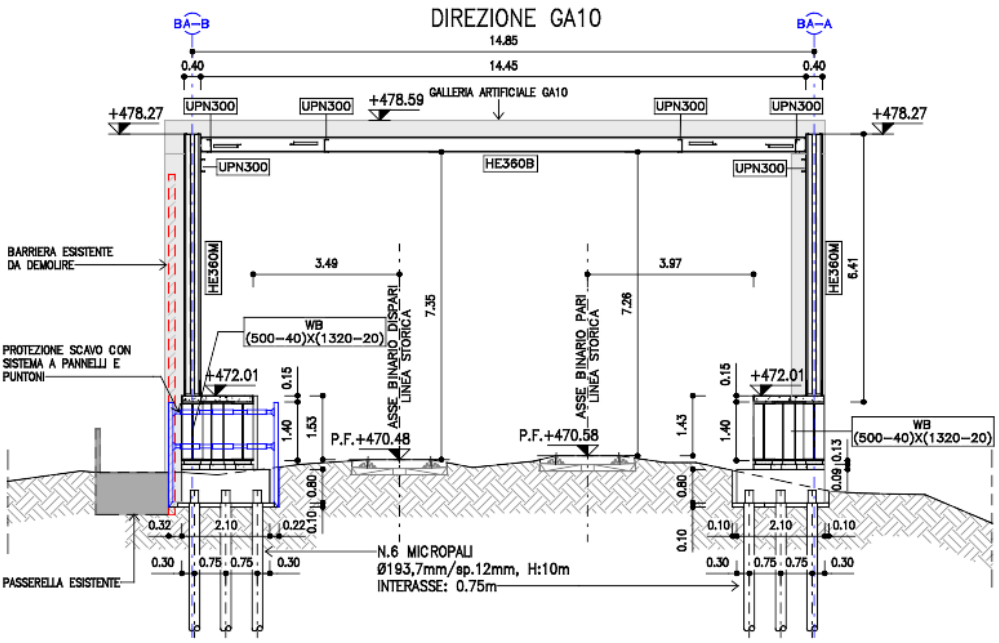

Figura 1-3: *Sezione Trasversale*

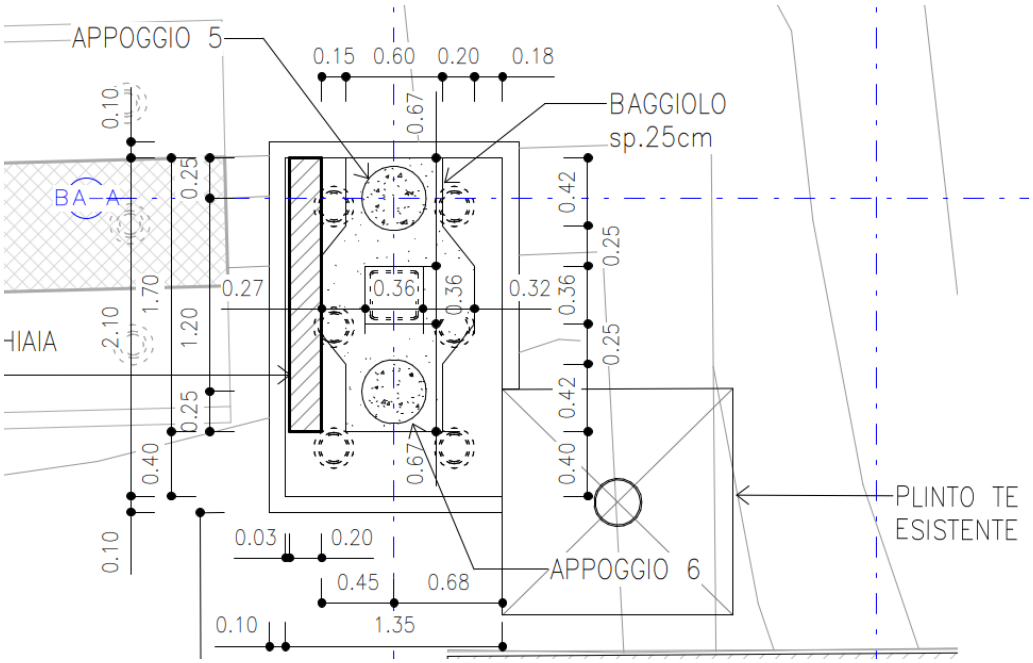

Figura 1-4: *Pianta spalla fissa*

Si noti che i micropali non sono disposti simmetricamente rispetto agli appoggi in quanto non è stato possibile allargare la fondazione verso l'esterno ma solo verso l'interno.

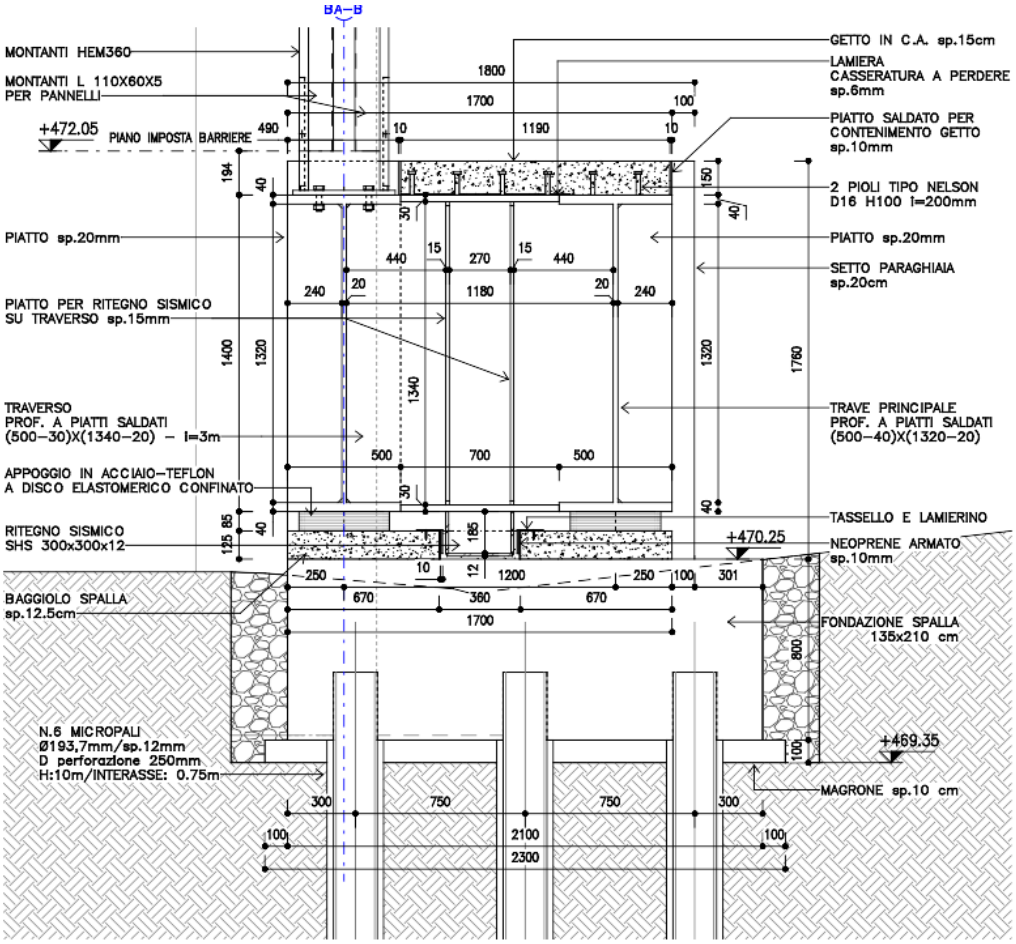

Figura 1-5: *Sezione su spalla fissa*

2. SCOPO E CONTENUTI DEL DOCUMENTO

Lo scopo principale del documento è quello di riportare i calcoli di dimensionamento e verifica di tutti gli elementi strutturali in acciaio e dei principali collegamenti che compongono la struttura. Successivamente saranno descritte le azioni di carico, le combinazioni ed i risultati utili per le verifiche strutturali.

2.1 UNITÀ DI MISURA

Nel seguito si adotteranno le seguenti unità di misura:

- lunghezze ⇒ m, mm
- carichi ⇒ kN, kN/m^2, kN/m^3
- azioni di calcolo ⇒ kN, kNm
- tensioni ⇒ N/mm^2

2.2 SINTESI DELLE ANALISI E DELLE VERIFICHE RIPORTATE

Nella presente relazione di calcolo, lo scavalco è stato implementato in un modello FE 3D.

I carichi sono stati applicati secondo le normative vigenti e sono brevemente riassunti di seguito:

- **Carichi Permanenti (G)**
  - G00 Peso Proprio: i carichi sono generati dalle caratteristiche geometriche della struttura e dal peso specifico del materiale;
  - G01 Carico permanente sbalzo;
  - G02 Carico permanente dei pannelli fonoassorbenti;

- **Carichi Accidentali (Q)**
  - Q00 Sovraccarico Accidentale sui marciapiedi;
  - Q01 Azione della Neve;
  - Q02 Azione del Vento;
  - Q03 Effetti aerodinamici associati al passaggio dei convogli;

- **Azioni Sismiche (E)**
  - E00 Inerzia Sismica Orizzontale;
  - E01 Inerzia Sismica Verticale;

- **Azioni Termiche (T)**
  - T00 Azione termica sulla struttura.

La descrizione del modello di calcolo FE è riportata al capitolo §9.

I carichi applicati sono descritti dettagliatamente nel capitolo §0.

Gli approcci progettuali e le combinazioni di carico e gli approcci progettuali sono descritti nei capitoli §9.3.6.

Le verifiche di progetto sono riportate ai capitoli 10, 10.3 e 12.

3. NORMATIVA, ELABORATI DI RIFERIMENTO E SOFTWARE UTILIZZATI

3.1 DOCUMENTI DI RIFERIMENTO

[1] Decreto Ministero delle Infrastrutture e Trasporti 14/01/2008, "Approvazione delle nuove norme tecniche per le costruzioni";

[2] C.S.LL.PP., Circolare n°617 del 02/02/2009, "Istruzioni per l'applicazione delle "nuove norme tecniche per le costruzioni" di cui al DM 14/01/2008";

[3] Manuale di Progettazione delle Opere Civili: PARTE I / Aspetti Generali (RFI DTC SI MA IFS 001 B);

[4] Manuale di Progettazione delle Opere Civili: PARTE II – Sezione 1 / Ambiente e Geologia (RFI DTC SI AG MA IFS 001 B – rev 22/12/2017);

[5] Manuale di Progettazione delle Opere Civili: PARTE II – Sezione 2 / Ponti e Strutture (RFI DTC SI PS MA IFS 001 B – rev 22/12/2017);

[6] Manuale di Progettazione delle Opere Civili: PARTE II – Sezione 3 / Corpo Stradale (RFI DTC SI CS MA IFS 001 B – rev 22/12/2017);

[7] Manuale di Progettazione delle Opere Civili: PARTE II – Sezione 4 / Gallerie (RFI DTC SI GA MA IFS 001 B – rev 22/12/2017);

[8] Manuale di Progettazione delle Opere Civili: PARTE II – Sezione 6 / Sagome e Profilo minimo degli ostacoli (RFI DTC SI CS MA IFS 003 B – rev 22/12/2017);

[9] UNI 11104: Calcestruzzo: Specificazione, prestazione, produzione e conformità - Istruzioni complementari per l'applicazione della EN 206-1;

[10] CNR n.10024 dell'ottobre 1986. Analisi di strutture mediante elaboratore: impostazione e redazione delle relazioni di calcolo.

[11] UNI EN 1990:2006: Eurocodice 0 – Criteri generali di progettazione strutturale;

[12] UNI EN 1991-1-1:2004 Parte 1-1: Eurocodice 1 – Azioni in generale – Pesi per unità di volume, pesi proprio e sovraccarichi per gli edifici;

[13] UNI EN 1991-1-1:2004 Parte 1-5: Eurocodice 1 – Azioni in generale - Azioni termiche;

[14] UNI EN 1991-2:2005 Parte 2: Eurocodice 1 – Carichi da traffico sui ponti;

[15] UNI EN 1992-1-1:2015 Parte 1-1: Eurocodice 2 – Regole generali e regole per gli edifici;

[16] UNI EN 1992-1-2:2019 Parte 1-2: Eurocodice 2 – Regole generali – Progettazione strutturale contro l'incendio;

[17] UNI EN 1992-2:2006 Parte 2: Eurocodice 2 – Ponti in calcestruzzo – Progettazione e dettagli costruttivi;

[18] UNI EN 1993-1-1:2005 Parte 1: Eurocodice 3 – Progettazione delle strutture di acciaio;

[19] UNI EN 1997-1:2013 Parte 1: Eurocodice 7 – Progettazione geotecnica – Regole generali;

[20] UNI EN 1998-1:2013 Parte 1: Eurocodice 8 – Progettazione delle strutture per la resistenza sismica – Regole generali, azioni sismiche e regole per gli edifici;

[21] UNI EN 1998-5:2005 Parte 5: Eurocodice 8 – Fondazioni, strutture di contenimento ed aspetti geotecnici.

3.2 SOFTWARE IMPIEGATI

Per la redazione del Progetto sono stati impiegati ii seguenti software di calcolo:

- Straus7 Versione 2.4.6 Strand7 Pty Ltd

3.3 ELABORATI DI RIFERIMENTO

Sono stati utilizzati come input per il presente documento i seguenti elaborati:

[1] U.O. Stazione e territorio, documento n.° IBL11BD44RGSN1000001A "Relazione tecnico descrittiva";

[2] U.O. Stazione e territorio, documento n.° IBL11BD44P8SN1000001A "Planimetria generale di inquadramento ante operam - (Pianta coperture)";

[3] U.O. Stazione e territorio, documento n.° IBL11BD44P8SN1000002A "Planimetria generale di inquadramento post operam - (Pianta coperture)";

[4] U.O. Stazione e territorio, documento n.° IBL11BD44P9SN1000003A "Pianta quota copertura 1/2";

[5] U.O. Stazione e territorio, documento n.° IBL11BD44P9SN1000004A "Pianta quota copertura 2/2";

[6] U.O. Stazione e territorio, documento n.° IBL11BD44P9SN1000005A "Prospetto Lato città";

[7] U.O. Stazione e territorio, documento n.° IBL11BD44P9SN1000006A "Prospetto Lato Isarco";

[8] U.O. Infrastrutture Nord, documento n.° IBL11BD26BZBA0900001A "Adeguamento ba su ponte Rio Gardena – Pianta fondazioni";

[9] U.O. Infrastrutture Nord, documento n.° IBL11BD26BZBA0900002A "Adeguamento ba su ponte Rio Gardena – Dettagli costruttivi";

[10] U.O. Infrastrutture Nord, documento n.° IBL11BD26CLBA0900001A "Adeguamento ba su ponte Rio Gardena – Relazione di calcolo";

[11] U.O. Infrastrutture Nord, documento n.° IBL11BD26PZBA0900001A "Adeguamento ba su ponte Rio Gardena – Planimetria e sezioni".

4. MATERIALI

Nella Tabella che segue si riportano in sintesi le Classi dei materiali impiegati per l'analisi strutturale:

ELEMENTO	CALCESTRUZZO
Soletta	32/40
Fondazione Plinto	C25/30
Magroni di pulizia	C12/15
ELEMENTO	**ACCIAIO IN BARRE A.M.**
Tutti	B450C
ELEMENTO	**CARPENTERIA METALLICA**
Tutti	S275

Tabella 1: Lista Materiali.

Le specifiche tecniche dei materiali, sopra descritti, sono ricavate nel seguente paragrafo, dove il riferimento principale per le verifiche SLE è stato assunto nelle Prescrizioni del Manuale RFI Parte 2 – Sezione 2 – 2.5.1.8.3.2.1.

4.1 CALCESTRUZZO SOLETTA PASSERALLA

Valore Caratteristico Resistenza Cubica a 28gg:	R_{ck}=	**40**	N/mm^2
Valore Caratteristico Resistenza Cilindrica a 28gg:	f_{ck}=	**32**	N/mm^2
Resistenza a compressione cilindrica media:	$f_{cm}= f_{ck} + 8 =$	40	N/mm^2
Resistenza a trazione assiale:	$f_{ctm} = 0.30 * f_{ck}^{2/3} =$	3.51	N/mm^2
	$f_{ctk.0.05} = 0.70 * f_{ctm} =$	2.46	N/mm^2
Resistenza a trazione per flessione	$f_{cfm} = 1.20 * f_{ctm} =$	4.21	N/mm^2
	$f_{cfk.0.05} = 0.70 * f_{cfm} =$	2.95	N/mm^2
Verifiche agli SLU:	γ_c=	**1.50**	
Resistenza di calcolo a compressione	$f_{cd} = 0.85 * f_{ck}/\gamma_c =$	18.13	N/mm^2
Resistenza di calcolo a trazione diretta	$f_{ctd} = f_{ctk.0.05}/\gamma_c =$	1.64	N/mm^2
Resistenza di calcolo a trazione per flessione	$f_{ctd.f} = 1.20 * f_{ctd} =$	1.97	N/mm^2
Modulo di Young secante:	$E_{cm} = 22 * [f_{cm}/10]^{0.3} =$	33346	N/mm^2
Modulo di elasticità tangenziale:	$G_{cm} = E / [2(1+\upsilon)] =$	13894	N/mm^2
Coefficiente di Poisson:	υ=	0.20	
Coefficiente di dilatazione lineare:	α =	0.000010	°C^{-1}
Tensione di aderenza acciaio-calcestruzzo:	η=	1.00	
	$f_{bd} = 2.25 * f_{ctk} * \eta/\gamma_c =$	3.69	N/mm^2
Verifiche agli SLE:			
Combinazioni Quasi Permanenti	$\sigma_{cmax.QP} = 0.40 * f_{ck} =$	12.80	N/mm^2
Combinazioni Caratteristiche	$\sigma_{cmax.R} = 0.55 * f_{ck} =$	17.60	N/mm^2
Verifiche a Fessurazione	$\sigma_t = f_{ctm} / 1.2 =$	2.93	N/mm^2

4.2 BASAMENTI: SPALLA E MENSOLA

Valore Caratteristico Resistenza Cubica a 28gg:	R_{ck}=	**35**	N/mm^2
Valore Caratteristico Resistenza Cilindrica a 28gg:	f_{ck}=	**28**	N/mm^2
Resistenza a compressione cilindrica media:	$f_{cm}= f_{ck} + 8 =$	36	N/mm^2
Resistenza a trazione assiale:	$f_{ctm} = 0.30 * f_{ck}^{2/3} =$	2.77	N/mm^2
	$f_{ctk.0.05} = 0.70 * f_{ctm} =$	1.94	N/mm^2
Resistenza a trazione per flessione	$f_{cfm} = 1.20 * f_{ctm} =$	3.32	N/mm^2
	$f_{cfk.0.05} = 0.70 * f_{cfm} =$	2.32	N/mm^2
Verifiche agli SLU:	γ_c=	**1.50**	
Resistenza di calcolo a compressione	$f_{cd} = 0.85 * f_{ck}/\gamma_c =$	15.87	N/mm^2
Resistenza di calcolo a trazione diretta	$f_{ctd} = f_{ctk.0.05}/\gamma_c =$	1.55	N/mm^2
Resistenza di calcolo a trazione per flessione	$f_{ctd.f} = 1.20 * f_{ctd} =$	1.86	N/mm^2
Modulo di Young secante:	$E_{cm} = 22 * [f_{cm}/10]^{0.3} =$	32308	N/mm^2
Modulo di elasticità tangenziale:	$G_{cm} = E / [2(1+\upsilon)] =$	13462	N/mm^2
Coefficiente di Poisson:	υ=	0.20	
Coefficiente di dilatazione lineare:	α =	0.000010	°C^{-1}
Tensione di aderenza acciaio-calcestruzzo:	η=	1.00	
	$f_{bd} = 2.25 * f_{ctk} * \eta/\gamma_c =$	2.91	N/mm^2
Verifiche agli SLE:			
Combinazioni Quasi Permanenti	$\sigma_{cmax.QP} = 0.40 * f_{ck} =$	10.00	N/mm^2
Combinazioni Caratteristiche	$\sigma_{cmax.R} = 0.55 * f_{ck} =$	13.75	N/mm^2
Verifiche a Fessurazione	$\sigma_t = f_{ctm} / 1.2 =$	2.13	N/mm^2

4.3 CALCESTRUZZO MAGRO

Valore Caratteristico Resistenza Cubica a 28gg:	R_{ck}=	**12**	N/mm^2
Valore Caratteristico Resistenza Cilindrica a 28gg:	f_{ck}=	**15**	N/mm^2
Resistenza a compressione cilindrica media:	$f_{cm}= f_{ck} + 8 =$	23	N/mm^2

4.4 ACCIAIO IN BARRE PER OPERE IN C.A.

Tensione caratteristica di rottura (frattile 5%)	f_{tk}=	540	N/mm^2
Tensione caratteristica di snervamento (frattile 5%)	f_{yk}=	450	N/mm^2
Fattore di sovra resistenza	$K = f_{tk}/f_{yk} =$	1.20	N/mm^2

Verifiche agli SLU:

Allungamento a rottura	ε_{uk}=	7.50	%
	$\varepsilon_{ud}= 0.9 * \varepsilon_{uk} =$	6.75	%
Coefficiente parziale per le verifiche agli SLU:	γ_s=	1.15	
Resistenza di calcolo allo SLU:	$f_{yd} = f_{yk}/\gamma_s =$	391.3	N/mm^2
Modulo di elasticità:	$E_f =$	210000	N/mm^2

Verifiche agli SLE:

Combinazioni Caratteristiche	$\sigma_{smax}= 0.75 * f_{yk} =$	337.5	N/mm^2

4.5 ACCIAIO PER CARPENTERIA METALLICA

Grado dell'acciaio		S275	
Tensione caratteristica di snervamento	f_{yk}=	275	N/mm^2
Tensione caratteristica di snervamento	f_{tk}=	430	N/mm^2
Coefficienti parziali di sicurezza:	γ_{M0}=	1.00	
	γ_{M1}=	1.00	
	γ_{M2}=	1.25	
Modulo di elasticità:	E_s=	210000	N/mm^2
Modulo di elasticità trasversale:	G=	8077	N/mm^2
Coefficiente di Poisson:	υ=	0.30	
Coefficiente di espansione termica lineare:	$\alpha =$	$12 \cdot 10^{-6}$	°C^{-1}
Densità:	$\delta =$	7850	kg/m^3

4.6 CONNETTORI A PIOLO

I connettori a piolo utilizzati per le travi composte acciaio-calcestruzzo dovranno infine essere conformi alle indicazioni riportate nelle normative EN ISO 13918 ed avere le seguenti caratteristiche meccaniche:

- Classe di resistenza: SJ2G3+C450 (St 37-3k)
- Resistenza caratteristica a rottura: ftk > 450 MPa
- Resistenza caratteristica a snervamento: fyk = 350 MPa

4.7 CLASSI DI ESPOSIZIONE E COPRIFERRI

Con riferimento alle specifiche di cui alla norma UNI 11104, si definiscono di seguito le classi di esposizione del calcestruzzo delle diverse parti della struttura oggetto dei dimensionamenti di cui al presente documento:

Elemento	Classe CLS	Classe di Esp.ne	Ambiente	Copriferro
				[mm]
Soletta impalcato	C30/37	XC3 + XF1	ordinario	50
Spalla e mensola	C28/35	XC4	aggressivo	40
Fondazione	C25/30	XC2	ordinario	50

Classe esposizione norma UNI 9858	Classe esposizione norma UNI 11104 UNI EN 206 –1	Descrizione dell'ambiene	Esempio	Massimo rapporto a/c	Minima Classe di resisenza	Contenuto minimo in aria (%)
4 Corrosione indotta da cloruri presenti nell'acqua di mare						
4 a 5 b	XS1	Esposto alla salsedine marina ma non direttamente in contatto con l'acqua di mare .	Calcestruzzo armato ordinario o precompresso con elementi strutturali sulle coste o in prossimità.	0,50	C 32/40	
	XS2	Permanentemente sommerso.	Calcestruzzo armato ordinario o precompresso di strutture marine completamente immersi in acqua.	0,45	C 35/45	
	XS3	Zone esposte agli spruzzi o alle marea.	Calcestruzzo armato ordinario o precompresso con elementi strutturali esposti alla battigia o alle zone soggette agli spruzzi ed onde del mare.	0,45	C 35/45	
5 Attacco dei cicli di gelo/disgelo con o senza disgelanti *						
2 b	XF1	Moderata saturazione d'acqua,in assenza di agente disgelante.	Superfici verticali di calcestruzzo come facciate e colonne esposte alla pioggia ed al gelo. Superfici non verticali e non soggette alla completa saturazione ma esposte al gelo, alla pioggia o all'acqua.	0,50	C 32/40	
3	XF2	Moderata saturazione d'acqua, in presenza di agente disgelante.	Elementi come parti di ponti che in altro modo sarebbero classificati come XF1 ma che sono esposti direttamente o indirettamente agli agenti disgelanti.	0,50	C 25/30	3,0
2 b	XF3	Elevata saturazione d'acqua, in assenza di agente disgelante	Superfici orizzontali in edifici dove l'acqua può accumularsi e che possono essere soggetti ai fenomeni di gelo, elementi soggetti a frequenti bagnature ed esposti al gelo.	0,50	C 25/30	3,0
3	XF4	Elevata saturazione d'acqua, con presenza di agente antigelo oppure acqua di mare.	Superfici orizzontali quali strade o pavimentazioni esposte al gelo ed ai sali disgelanti in modo diretto o indiretto, elementi esposti al gelo e soggetti a frequenti bagnature in presenza di agenti disgelanti o di acqua di mare.	0,45	C 28/35	3,0
6 Attacco chimico**						
5 a	XA1	Ambiente chimicamente debolmente aggressivo secondo il prospetto 2 della UNI EN 206-1	Contenitori di fanghi e vasche di decantazione. Contenitori e vasche per acque reflue.	0,55	C 28/35	
4 a 5 b	XA2	Ambiente chimicamente moderatamente aggressivo secondo il prospetto 2 della UNI EN 206-1	Elementi strutturali o pareti a contatto di terreni aggressivi.	0,50	C 32/40	
5 c	XA3	Ambiente chimicamente fortemente aggressivo secondo il prospetto 2 della UNI EN 206-1	Elementi strutturali o pareti a contatto di acque industriali fortemente aggressive. Contenitori di foraggi, mangimi e liquame provenienti dall'allevamento animale. Torri di raffreddamento di fumi di gas di scarico industriali.	0,45	C 35/45	

*) Il grado di saturazione della seconda colonna riflette la relativa frequenza con cui si verifica il gelo in condizioni di saturazione:
- moderato: occasionalmente gelato in condizione di saturazione;
- elevato: alta frequenza di gelo in condizioni di saturazione.

**) Da parte di acque del terreno e acque fluenti.

Classe esposizione norma UNI 9858	Classe esposizione norma UNI 11104 UNI EN 206 –1	Descrizione dell'ambiene	Esempio	Massimo rapporto a/c	Minima Classe di resisenza	Contenuto minimo in aria (%)
1 Assenza di rischio di corrosione o attacco						
1	X0	Per calcestruzzo privo di armatura o inserti metallici: tutte le esposizioni eccetto dove c'è gelo/disgelo, o attacco chimico. Calcestruzzi con armatura o inserti metallici:in ambiente molto asciutto.	Interno di edifici con umidità relativa molto bassa. Calcestruzzo non armato all'interno di edifici. Calcestruzzo non armato immerso in suolo non aggressivo o in acqua non aggressiva. Calcestruzzo non armato soggetto a cicli di bagnato asciutto ma non soggetto ad abrasione, gelo o attacco chimico.	-	C 12/15	
2 Corrosione indotta da carbonatazione Nota - Le condizioni di umidità si riferiscono a quelle presenti nel copriferro o nel ricoprimento di inserti metallici, ma in molti casi su può considerare che tali condizioni riflettano quelle dell'ambiente circostante.In questi casi la classificazione dell'ambiente circostante può essere adeguata.Questo può non essere il caso se c'è una barriera fra il calcestruzzo e il suo ambiente.						
2 a	XC1	Asciutto o permanentemente bagnato.	Interni di edifici con umidità relativa bassa. Calcestruzzo armato ordinario o precompresso con le superfici all'interno di strutture con eccezione delle parti esposte a condensa, o immerse i acqua.	0,60	C 25/30	
2 a	XC2	Bagnato, raramente asciutto.	Parti di strutture di contenimento liquidi,fondazioni. Calcestruzzo armato ordinario o precompresso prevalentemente immerso in acqua o terreno non aggressivo.	0,60	C 25/30	
5 a	XC3	Umidità moderata.	Calcestruzzo armato ordinario o precompresso in esterni con superfici esterne riparate dalla pioggia, o in interni con umidità da moderata ad alta.	0,55	C 28/35	
4 a 5 b	XC4	Ciclicamente asciutto e bagnato.	Calcestruzzo armato ordinario o precompresso in esterni con superfici soggette a alternanze di asciutto ed umido. Calcestruzzi a vista in ambienti urbani. Superfici a contatto con l'acqua non comprese nella classe XC2.	0,50	C 32/40	
3 Corrosione indotta da cloruri esclusi quelli provenenti dall'acqua di mare						
5 a	XD1	Umidità moderata.	Calcestruzzo armato ordinario o precompresso in superfici o parti di ponti e viadotti esposti a spruzzi d'acqua contenenti cloruri.	0,55	C 28/35	
4 a 5 b	XD2	Bagnato, raramente asciutto.	Calcestruzzo armato ordinario o precompresso in elementi strutturali totalmente immersi in acqua anche industriale contenete cloruri (Piscine).	0,50	C 32/40	
5 c	XD3	Ciclicamente bagnato e asciutto.	Calcestruzzo armato ordinario o precompresso, di elementi strutturali direttamente soggetti agli agenti disgelanti o agli spruzzi contenenti agenti disgelanti. Calcestruzzo armato ordinario o precompresso, elementi con una superficie immersa in acqua contenente cloruri e l'altra esposta all'aria. Parti di ponti, pavimentazioni e parcheggi per auto.	0,45	C 35/45	

Figura 4-1: *Classi di esposizione secondo UNI-EN 206-2006.*

La scelta delle classi di resistenza dei conglomerati riportate in precedenza viene di seguito verificata impiegando il Prospetto 4 della UNI-EN 11104 il quale prescrive, in funzione delle Classi di Esposizione, la resistenza minima delle miscele da adottare:

UNI 11104:2004

prospetto 4 **Valori limiti per la composizione e le proprietà del calcestruzzo**

	Classi di esposizione																	
	Nessun rischio di corrosione dell'armatura	Corrosione delle armature indotta dalla carbonatazione				Corrosione delle armature indotta da cloruri						Attacco da cicli di gelo/disgelo				Ambiente aggressivo per attacco chimico		
						Acqua di mare			Cloruri provenienti da altre fonti									
	X0	XC1	XC2	XC3	XC4	XS1	XS2	XS3	XD1	XD2	XD3	XF1	XF2	XF3	XF4	XA1	XA2	XA3
Massimo rapporto *a/c*	-	0,60		0,55	0,50	0,50	0,45		0,55	0,50	0,45	0,50	0,50		0,45	0,55	0,50	0,45
Minima classe di resistenza*)	C12/15	C25/30		C28/35	C32/40	C32/40	C35/45		C28/35	C32/40	C35/45	32/40	25/30		28/35	28,35	32/40	35/45
Minimo contenuto in cemento (kg/m^3)	-	300		320	340	340	360		320	340	360	320	340		360	320	340	360
Contenuto minimo in aria (%)													3,0[a)]					
Altri requisiti												Aggregati conformi alla UNI EN 12620 di adeguata resistenza al gelo/disgelo				È richiesto l'impiego di cementi resistenti ai solfati[b)]		

*) Nel prospetto 7 della UNI EN 206-1 viene riportata la classe C8/10 che corrisponde a specifici calcestruzzi destinati a sottofondazioni e ricoprimenti. Per tale classe dovrebbero essere definite le prescrizioni di durabilità nei riguardi di acque o terreni aggressivi.

a) Quando il calcestruzzo non contiene aria aggiunta, le sue prestazioni devono essere verificate rispetto ad un calcestruzzo aerato per il quale è provata la resistenza al gelo/disgelo, da determinarsi secondo UNI 7087, per la relativa classe di esposizione.

b) Qualora la presenza di solfati comporti le classi di esposizione XA2 e XA3 è essenziale utilizzare un cemento resistente ai solfati secondo UNI 9156.

Figura 4-2: *Classi di resistenza minima del calcestruzzo secondo UNI – 11104.*

I copriferri di progetto adottati per le barre di armatura, tengono infine conto inoltre delle prescrizioni di cui alla Tabella C4.1.IV della Circolare n.617 del 02-02-09 redatta dal legislatore per una Vita Nominale di 50 anni:

Vita Nominale = 50 anni			barre c.a. per Piastre		barre c.a. per altri Elem.		cavi c.a.p. per Piastre		cavi c.a.p. per altri Elem.	
Cmin	Co	ambiente	C>=Co	Cmin<=C<Co	C>=Co	Cmin<= C<Co	C>=Co	Cmin<= C<Co	C>=Co	Cmin<=C<Co
25	35	ordinario	15	20	20	25	25	30	30	35
28	40	agrressivo	25	30	30	35	35	40	40	45
35	45	molto aggr.	35	40	40	45	45	50	50	50

Figura 4-3: *Definizioni del copriferro secondo NTC 2008.*

	Soletta impalcato	Spalla e mensola	Fondazione	
fck =	32	28	25	N/mm²
AMBIENTE =	1	2	1	Ordinario
Classe di Esposizione =	XC3 + XF1	XC4	XC2	
Cmin =	25	28	25	N/mm²
Co =	35	40	35	N/mm²
VITA NOMINALE =	75	75	75	anni
Copriferro base =	30	35	30	mm
Incr. per Resistenza =	0		0	mm
Incr. per Vita Nominale =	5	5	5	mm
Incr. per Controllo Qualità =	0		0	mm
Tolleranze di posa =	10	10	10	mm
Copriferro di Calcolo =	**45**	**50**	**45**	mm
Copriferro di PE =	**50**	**50**	**50**	**mm**

5. CARATTERIZZAZIONE GEOTECNICA

Per l'inquadramento geotecnico dell'opera si rimanda all'elaborato IB0U1BEZZGEGE0006003 - "Opere parte B - Relazione geotecnica di caratterizzazione".

6. CARATTERIZZAZIONE SISMICA

Le opere in progetto per la struttura di scavalco si trovano nel comune di Ponte Gardena, in un sito con le seguenti coordinate geografiche: Latitudine (WGS84) 46.59926566°, Longitudine (WGS84) 11.53149244°.

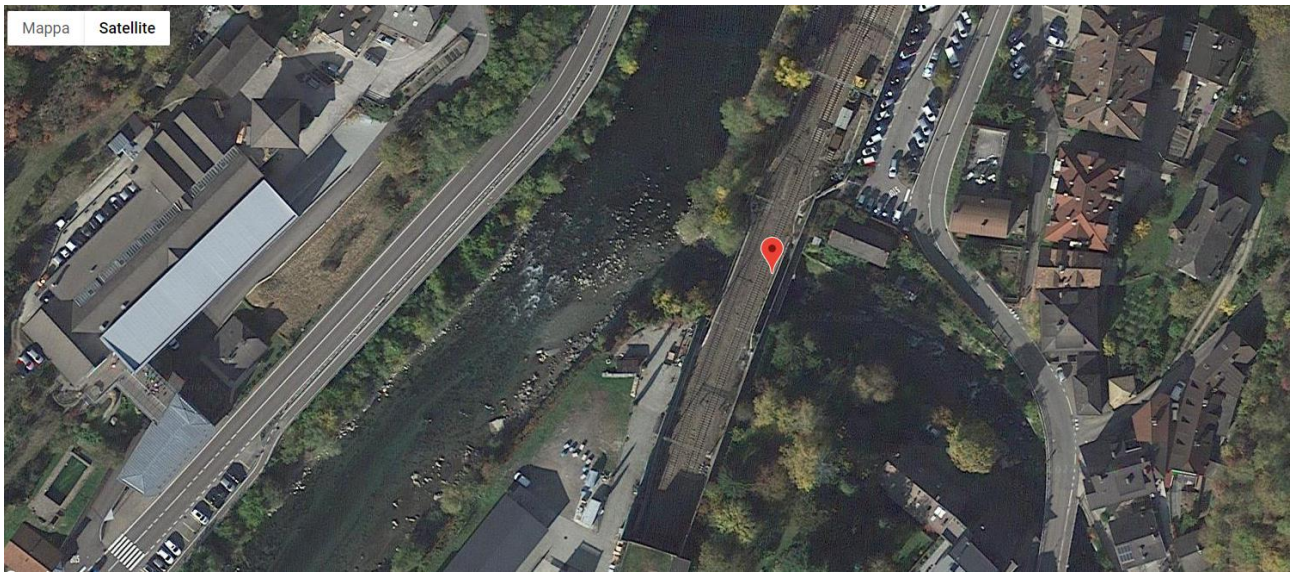

Figura 6-1: *Geo-localizzazione delle aree in esame in Google Earth.*

Si determina preliminarmente la vita di riferimento dell'azione sismica considerando in accordo con la committenza la classe d'uso III con il relativo coefficiente d'uso:

Struttura in progetto	V_N	**Classe**	C_u	V_R
Scavalco Rio Gardena	75	III	1.5	112.5

Per le opere definitive di imbocco, il periodo di ritorno si determina con l'espressione:

$$T_R = -\frac{V_R}{\ln(1 - P_{V_R})}$$

Per il caso in progetto avendo determinato la vita di riferimento si determinano i tempi di ritorno:

Stato limite azione sismica	SLE		SLU	
	SLO	SLD	SLV	SLC
P_{V_R}	0.81	0.63	0.10	0.05
Struttura in progetto	T_R			
Scavalco Rio Gardena	68	113	1068	2193

Sulla base delle coordinate geografiche del sito e del tempo di ritorno del sisma di progetto, TR, sopra definito, si ricavano i parametri che caratterizzano il sisma di progetto relativo al sito di riferimento, rigido ed orizzontale (Tabella 1 dell'allegato B del D.M. 14/01/2008):

− ag: accelerazione orizzontale massima

− Fo: valore massimo del fattore di amplificazione dello spettro in accelerazione orizzontale

− T*C: periodo di inizio del tratto a velocità costante dello spettro in accelerazione orizzontale.

Struttura in progetto											
Scavalco Rio Gardena											
Stato limite azione sismica											
SLE						SLU					
SLO			SLD			SLV			SLC		
a_g/g	F_0	$T*_c$	a_g/g	F_0	$T*_c$	a_g/g	F_0	$T*_c$	a_g/g	F_0	$T*_c$
0.027	2.470	0.202	0.033	2.456	0.243	0.066	2.669	0.391	0.079	2.771	0.423

Nel caso in esame assunti che siano la topografia T1 e la stratigrafia C si ottiene:

Stato limite azione sismica			SLE				SLU			
			SLO		SLD		SLV		SLC	
Struttura in progetto	Topografia	Stratigrafia	S_T	S_S	S_T	S_S	S_T	S_S	S_T	S_S
Scavalco Rio Gardena	T1	C	1.00	1.50	1.00	1.50	1.00	1.50	1.00	1.50
			C_c		C_c		C_c		C_c	
			1.780		1.670		1.430		1.390	

Di seguito si riportano gli spettri di progetto

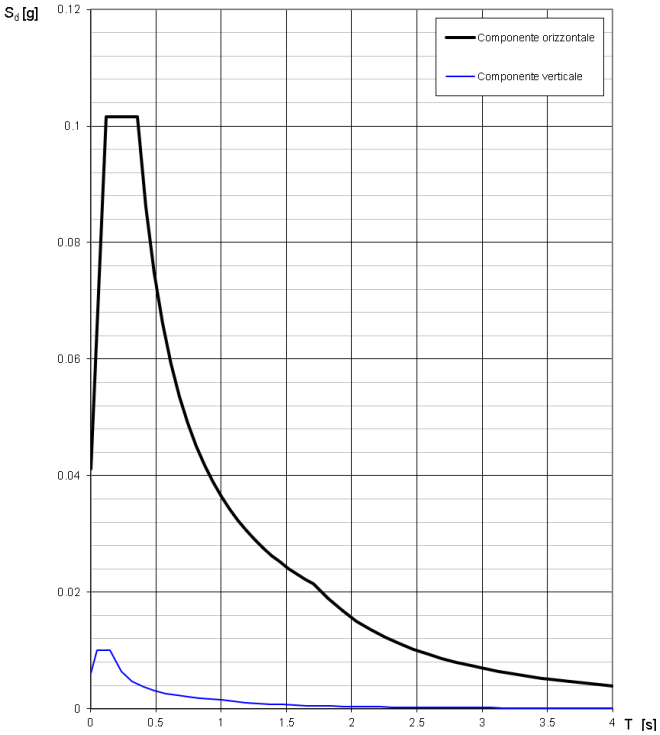

Figura 3.3 - 1: spettro di risposta (SLO)

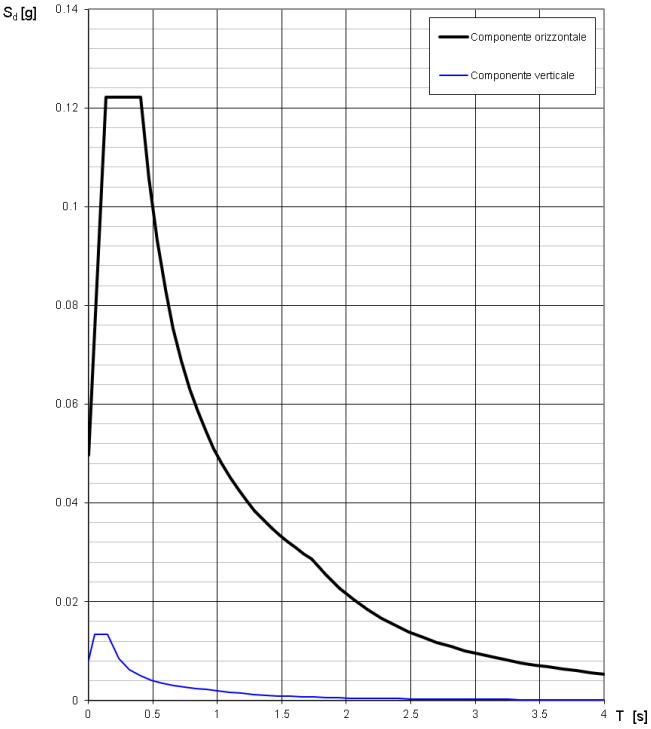

Figura 3.3 - 2: spettro di risposta (SLD)

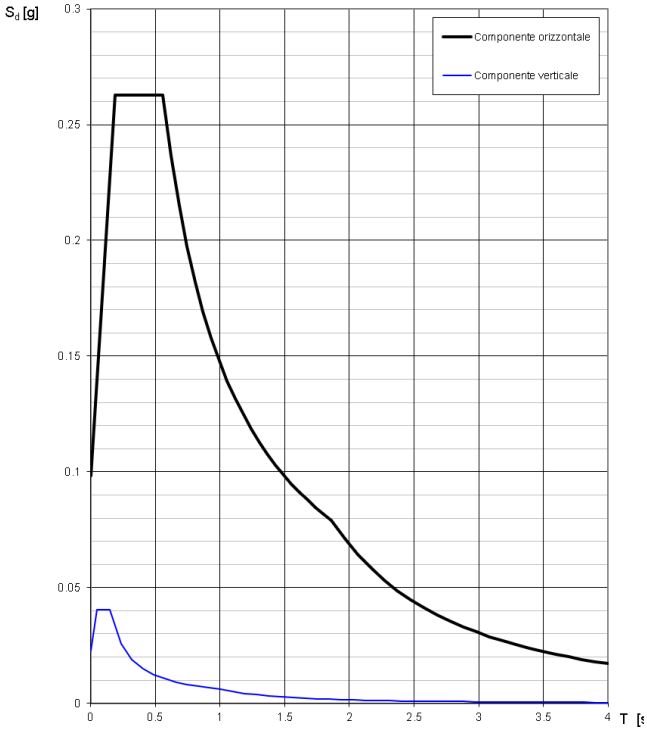

Figura 3.3 - 3: spettro di risposta (SLV)

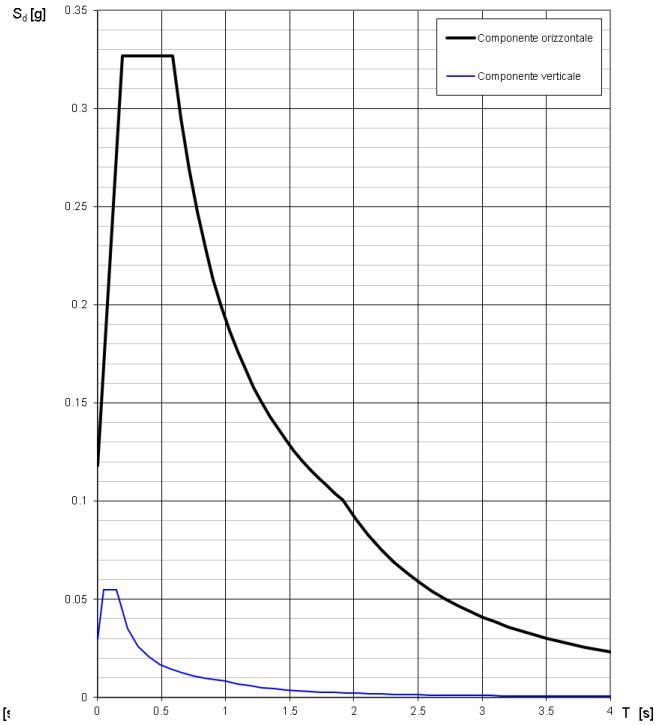

Figura 3.3 – 4: spettro di risposta (SLC)

7. DESCRIZIONE DEL SOFTWARE IMPIEGATO

Le analisi numeriche per le valutazioni degli effetti delle azioni sugli elementi strutturali sono state eseguite mediante il codice informatico Strand7, Release 2.4.6 distribuito da Strand7 Pty Ltd.

Nei paragrafi successivi viene data una breve descrizione dei codici di calcolo.

7.1 STRAUS RELEASE 2.4.6

Strand7 è un codice agli elementi finiti per l'analisi strutturale distribuito da Strand7 Pty Ltd.

Il programma calcola le forze risultanti, i momenti flettenti, lo sforzo di taglio, le forze normali, la torsione e molto altro.

Il motore di analisi Straus7 offre le seguenti funzionalità:

- Analisi statica e dinamica;
- Analisi lineare e non lineare;
- Analisi sismica dinamica e analisi push over statica;
- Analisi del carico dinamico dei veicoli per i ponti;
- Non linearità geometrica, inclusi effetti P-delta e di grande spostamento;
- Costruzione a gradini (incrementale);
- Effetti di creep, restringimento e invecchiamento;
- Analisi di instabilità;
- Analisi allo stato stazionario e densità spettrale di potenza;
- Elementi strutturali di telaio e guscio, inclusi comportamento trave-pilastro, capriata, membrana e piatto;
- Elementi con comportamento a cavo o fune;
- Elementi solidi piani e assialsimmetrici bidimensionali;
- Elementi solidi tridimensionali;
- Collegamento non lineare ed elementi di supporto;
- Collegamento dipendente dalla frequenza e proprietà di supporto.

7.1.1 Fasi generali di calcolo

I seguenti passaggi generali sono necessari per analizzare e progettare una struttura utilizzando Straus7:

1. Creare o modificare un modello che definisca numericamente la geometria, le proprietà, il carico e i parametri di analisi per la struttura;
2. Eseguire un'analisi del modello (analisi statica o modale);
3. Rivedere i risultati dell'analisi;
4. Verificare e ottimizzare il progetto della struttura con i codici standard (EC2, EC3…);

Questo è di solito un processo iterativo che può coinvolgere diversi cicli della sequenza di passaggi di cui sopra.

Gli elementi più comuni utilizzati nella progettazione civile sono gli elementi trave e gli elementi piastra. Tutti loro sono brevemente descritti di seguito.

7.1.2 Elementi "BEAM"

L'elemento "Beam" è un elemento 1D che può essere utilizzato per modellare travi, colonne, controventi e tralicci in strutture planari e tridimensionali. L'elemento "Trave" utilizza una formulazione generale, tridimensionale, trave-colonna che include gli effetti di flessione biassiale, torsione, deformazione assiale e deformazione biassiale di taglio. Un elemento "Trave" è modellato come una linea retta che collega due punti. La variazione della rigidità alla flessione può essere lineare, parabolica o cubica su ciascun segmento di lunghezza. Le proprietà assiali, di taglio, torsionali, di massa e di peso variano tutte linearmente su ogni segmento.

L'elemento trave è definito dai nodi N1 e N2 come mostrato nella figura sottostante. Questo definisce anche il sistema di coordinate principale. Il sistema di assi viene utilizzato per definire le proprietà della sezione e per definire i risultati di forza, momento, sollecitazione e deformazione.

Per una trave con un nodo di riferimento, il sistema di assi principali, mostrato in Figura 7-1 è definito come segue:

• assi diretti dal nodo N1 al nodo N2.

• normale dell'asse ai 3 assi e giace nel piano formato dai nodi N1, N2 e dal nodo di riferimento RifN. È positivo verso il lato su cui il nodo RefNlies.

• asse 1 completa il sistema di assi di destra.

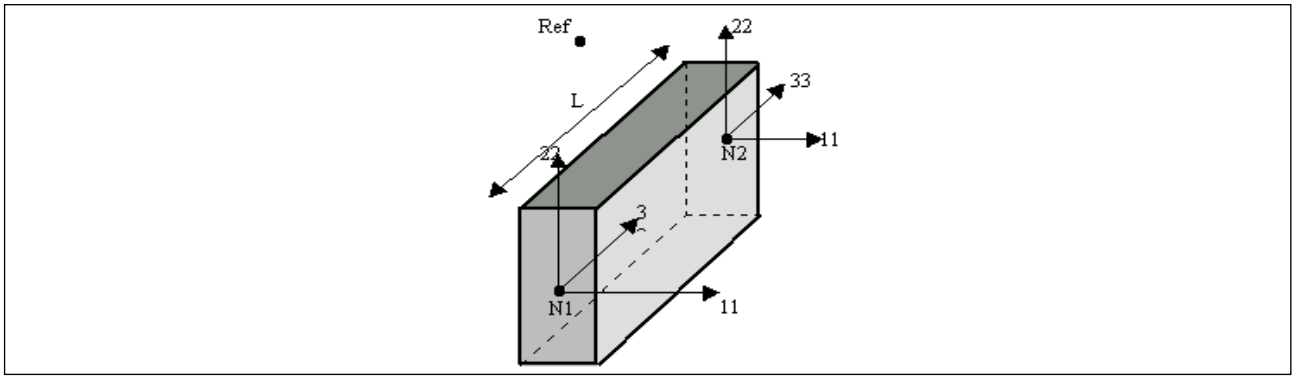

Figura 7-1: *Sistema di coordinate principali di un elemento "Beam".*

Straus7 fornisce i risultati della forza di taglio e del momento flettente per un elemento trave in due piani principali, Piano 1 e Piano 2. Il piano 1 è definito dall'asse 1 e dall'asse 3. Il piano 2 è definito dall'asse 2 e dall'asse 3.

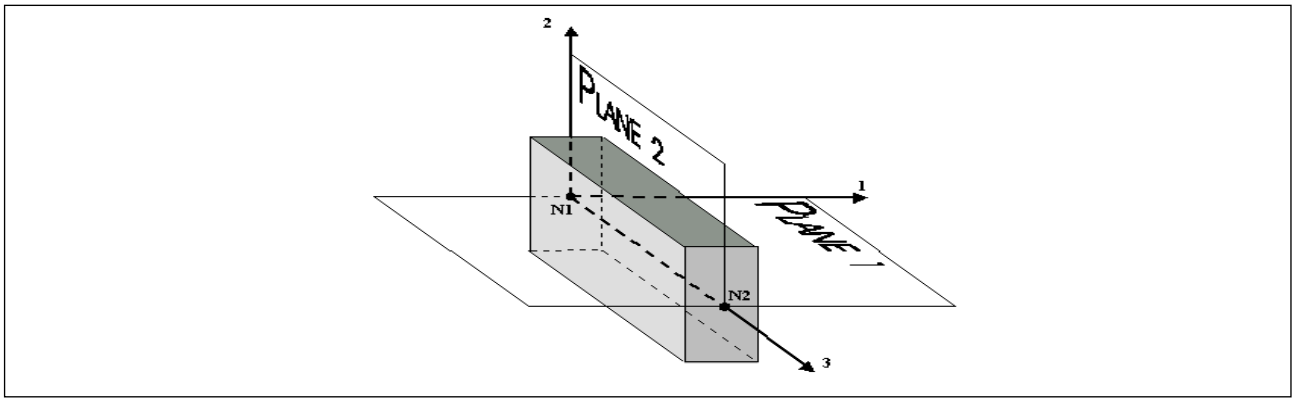

Figura 7-2: *Principali piani di un elemento "Beam".*

Di seguito sono illustrate le convenzioni di segno per le forze di taglio e i momenti flettenti in ciascun piano.

	Positive	**Negative**
Plane 1	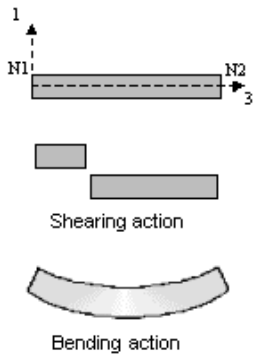	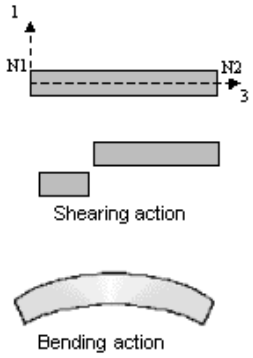
Plane 2	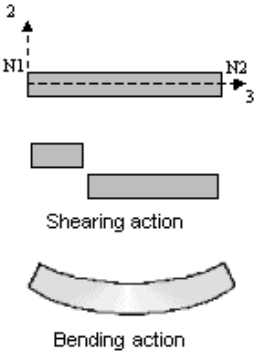	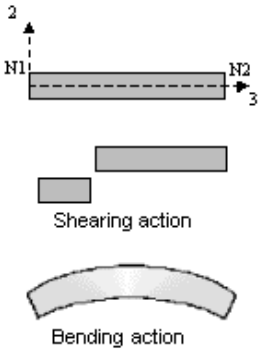

Figura 7-3: *Convenzioni di segno per lo Sforzo di Taglio e per il Momento Flettente.*

In ogni piano, una forza di taglio positiva taglia il lato N1 della trave verso il lato positivo dell'asse. Un momento flettente positivo genera una sollecitazione di compressione della fibra sul lato positivo dell'asse.

"Beam Element Property" è un insieme di proprietà materiali e geometriche che descrivono la sezione trasversale di uno o più elementi Frame. Le sezioni sono definite indipendentemente dagli elementi Frame e sono assegnate agli elementi. Le proprietà della sezione sono di due tipi fondamentali:

• Prismatico — tutte le proprietà sono costanti lungo l'intera lunghezza dell'elemento;

• Non prismatico — le proprietà possono variare lungo la lunghezza dell'elemento;

Le strutture che possono essere modellate con questo elemento includono:

• Cornici tridimensionali;

• Tralicci tridimensionali;

• Telai planari;

• Griglie planari;

• Tralicci planari;

• Cavi.

Tra i principali attributi della trave presenti nel software Strand7, quello 'taper' permette di tenere conto della variabilità delle dimensioni della sezione trasversale. Questo può essere fatto con riferimento a uno o entrambi gli assi x e y locali della trave (vedi Figura 7-1) definendo due (uno per ciascuna direzione) valori positivi non dimensionali utilizzati per specificare la dimensione della sezione trasversale alle estremità come un rapporto della sezione trasversale originale della trave (come definito nel set di proprietà). Questi numeri possono essere costanti (se esiste una variabilità lineare) o un'equazione che definisce il rapporto in funzione della posizione dell'estremità della trave.

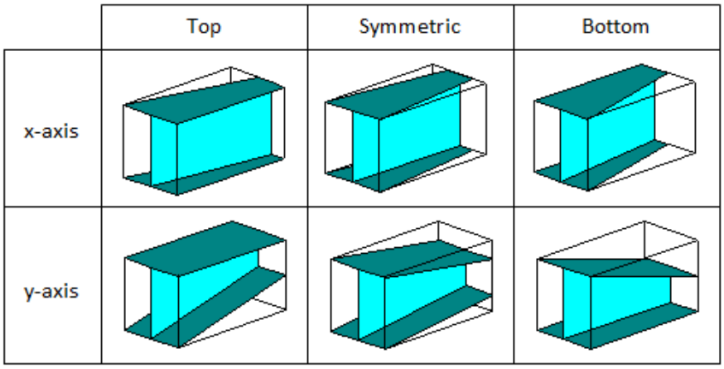

Figura 7-4: *Attributo "Taper" nel software Straus7.*

Quando si utilizzano le travi rastremate, il numero di sezioni che il solutore utilizza per le integrazioni degli elementi (che normalmente è posto pari a 5) viene utilizzato per definire per ognuna tutte le proprietà della sezione.

7.1.3 Elementi "PLATE"

"Plate" è un nome generico per un gruppo di elementi di superficie bidimensionali. Gli elementi di superficie (sempre indicati come "piastre" in Straus7) includono gli elementi triangolari a tre e sei nodi e gli elementi quadrilateri a quattro, otto e nove nodi. Questi elementi possono essere utilizzati per l'analisi di sollecitazione piana e deformazione piana, problemi solidi assialsimmetrici, analisi di piastre e shell, come pannelli di taglio, membrane 3D e per l'analisi del flusso di calore.

Il sistema di assi locale predefinito per questi elementi è mostrato nella figura seguente ed è costruito dai nodi N1, N2, N3 per il triangolo e N1, N2, N3, N4 per l'elemento quadrilatero come segue:

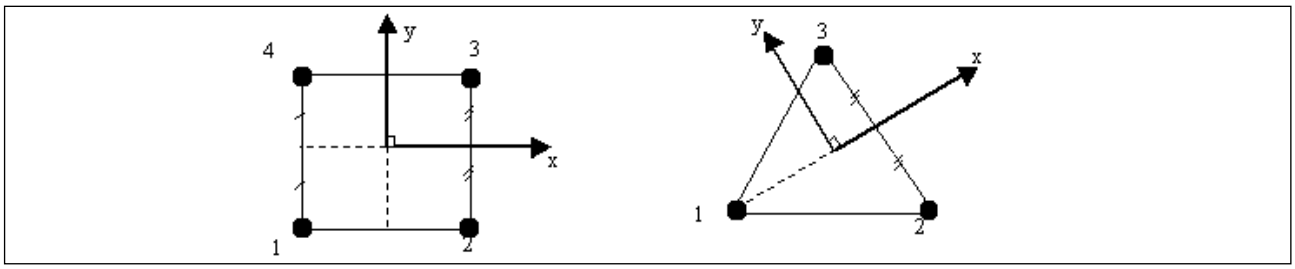

Figura 7-5: *Assi locali per elementi "Plate" a 3 e 4 nodi.*

- La x locale positiva unisce i punti medi dal lato (N1,N4) al lato (N2,N3) per l'elemento quadrilatero, o va da N1 al punto medio del lato (N2,N3) per il triangolo.
- Il locale positivo y è normale all'asse x locale diretto dal lato (N1,N2) e giace nel piano della piastra.

I pedici minuscoli x e y si riferiscono agli assi locali definiti sulla piastra e le sollecitazioni sono tensione positiva nella convenzione normale mostrata nella figura sottostante.

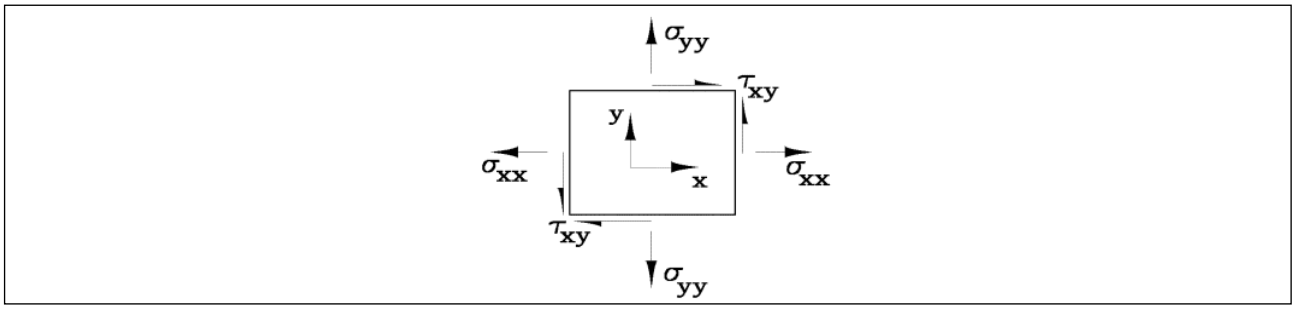

Figura 7-6: *Convenzione positiva per le sollecitazioni nel piano.*

Le convenzioni positive per i momenti sull'elemento piastra sono mostrate nella figura seguente.

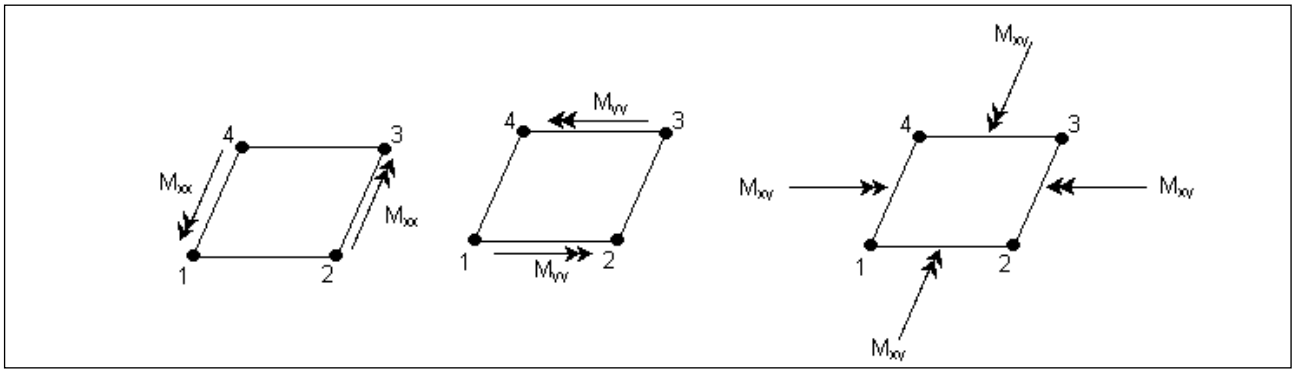

Figura 7-7: *Convenzione positiva per i momenti sull'elemento "Plate".*

Il momento Mxx dà σxx

Il momento Myy dà σyy

Il momento Mxy fornisce il taglio τyx e τxy.

Mxx e Myy positivi causano tensione sul lato z positivo della piastra e Mxy fornisce τxy positivo a z positivo. Quando sono presenti membrana e flessione, le sollecitazioni nel piano variano linearmente attraverso la direzione dello spessore (z locale). Per una lastra isotropa, assumendo un'analisi statica lineare, queste sollecitazioni sono date da:

$$\sigma_{xx}(z) = \sigma_{xx} + 12\frac{M_{xx}z}{t_B 3}$$

$$\sigma_{yy}(z) = \sigma_{yy} + 12\frac{M_{yy}z}{t_B 3}$$

$$\tau_{xy}(z) = \tau_{xy} + 12\frac{M_{xy}z}{t_B 3}$$

Qui t_B è lo spessore di piegatura. I valori di sollecitazione sopra riportati vengono utilizzati per calcolare le sollecitazioni principali sul piano medio e sulle superfici superiore e inferiore della piastra. Le risultanti delle forze di taglio sono riportate anche sulla piastra dove:

$$Q_{xz} = \frac{\partial M_{xx}}{\partial x} + \frac{\partial M_{xy}}{\partial y} \qquad Q_{yz} = \frac{\partial M_{yy}}{\partial y} + \frac{\partial M_{xy}}{\partial x}$$

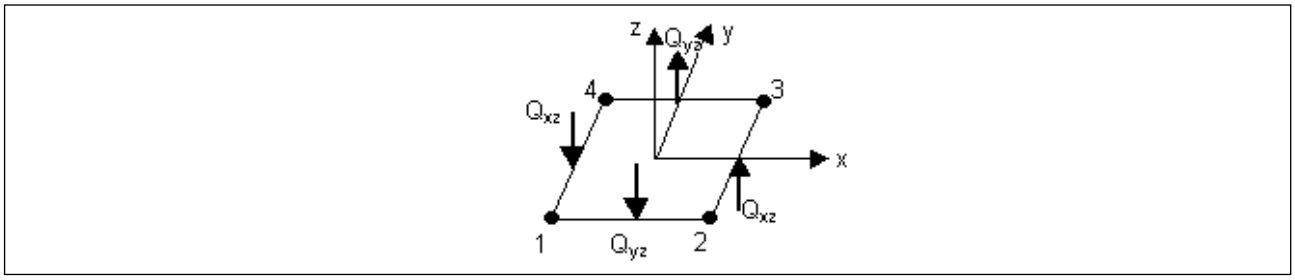

Figura 7-8: *Convenzione positiva per gli sforzi di Taglio.*

Sono consentite proprietà del materiale dipendenti dalla temperatura e ortotrope. Ogni elemento può essere caricato per gravità e carichi uniformi in qualsiasi direzione; pressione superficiale sulle facce superiore, inferiore e laterale; e carichi dovuti a deformazioni e variazioni di temperatura. Per la rigidità Shell viene utilizzata una formulazione di integrazione numerica a quattro punti. Le sollecitazioni e le forze ei momenti interni, nel sistema di coordinate locali dell'elemento, sono valutati nei punti di integrazione di Gauss 2 per 2 e possono essere estrapolati ai giunti dell'elemento.

Le strutture che possono essere modellate con questo elemento includono:

- solette;
- pareti;
- impalcati di ponti;
- Involucri curvi tridimensionali, come serbatoi e cupole;
- modelli dettagliati di travi, pilastri, tubi e altri elementi strutturali.

8. CRITERI GENERALI DI VERIFICA

8.1 STRUTTURE IN CALCESTRUZZO ARMATO

8.1.1 Valutazione della sicurezza e metodo di analisi

Per la valutazione degli effetti delle azioni in accordo al DM 14/01/2008 si è scelta di adottare l'analisi elastica lineare.

Per la determinazione degli effetti delle azioni si è assunto:

1. sezioni interamente reagenti con rigidezze valutate riferendosi al solo calcestruzzo
2. relazioni tensione deformazione lineari
3. valori medi del modulo d'elasticità

Per la determinazione degli effetti delle deformazioni termiche si è assunto:

1. per gli stati limite ultimi, rigidezze ridotte valutate ipotizzando che le sezioni siano fessurate. La rigidezza delle sezioni fessurate è stata assunta assunta pari alla metà della rigidezza delle sezioni interamente reagenti;
2. per gli stati limite di esercizio, si sono assunte rigidezze intermedie tra quelle delle sezioni interamente reagenti e quelle delle sezioni fessurate.

8.1.2 Coefficienti di sicurezza lato materiale

I coefficienti di sicurezza lato materiali adottati sono di seguito riportati:

Materiale	Coefficiente di sicurezza
Calcestruzzo	$\gamma_c = 1.5$
Armatura lenta	$\gamma_s = 1.15$

8.1.3 Resistenze di calcolo dei materiali e caratteristiche meccaniche

Per il calcestruzzo si assumerà una resistenza di calcolo a compressione data da:

$$f_{cd} = \frac{\alpha_{cc} f_{ck}}{\gamma_c}$$

essendo α_{cc} il coefficiente riduttivo a lunga durata assunto pari ad 0.85.

La resistenza di progetto a trazione sarà assunta pari a

$$f_{ctd} = \frac{f_{ctk}}{\gamma_c}$$

Essendo f_{ctk} la resistenza caratteristica a trazione data dalla seguente (frattile 5%) con :

$$f_{ctk} = 0.7 f_{ctm}$$

essendo f_{ctm} la resistenza media a trazione per calcestruzzi di classe inferiore al C50/60 data da:

$$f_{ctm} = 0.30\sqrt[3]{{f_{ck}}^2}$$

La resistenza media a trazione per flessione risulta invece data da:

$$f_{cfm} = 1.20 \cdot f_{ctm}$$

Il modulo elastico del calcestruzzo espresso in N/mm^2 sarà:

$$E_{cm} = 22.000 \cdot \left(\frac{f_{cm}}{10}\right)^{0.3}$$

dove f_{cm} rappresenta il valore medio della resistenza a compressione pari a (N/mm^2):

$$f_{cm} = f_{ck} + 8$$

Per l'acciaio ordinario essendo f_{yk} la resistenza caratteristica a trazione dell'acciaio delle barre:

$$f_{yd} = \frac{f_{yk}}{\gamma_s}$$

ed il modulo elastico si assumerà:

$$E_s = 210000\ N/mm^2$$

8.1.4 Verifiche agli SLU delle sezioni per flessione e sforzo normale retta (elementi monodimensionali)

La verifica viene condotta mediante le seguenti ipotesi di base:

1. Conservazione delle sezioni piane
2. Perfetta aderenza tra acciaio e calcestruzzo
3. Resistenza nulla a trazione del calcestruzzo
4. rottura del calcestruzzo determinata dal raggiungimento della sua capacità deformativa ultima a compressione
5. rottura dell'armatura tesa determinata dal raggiungimento della sua capacità deformativa ultima

Le tensioni nel calcestruzzo e nell'armatura sono state determinate, a partire dalle deformazioni, utilizzando i rispettivi diagrammi tensione-deformazione.

Per il calcestruzzo è stato assunto il diagramma parabola rettangolo con deformazioni limite date da per calcestruzzi di classe inferiore al C50/60:

$$\varepsilon_{c2} = 0.2\ \% \qquad \varepsilon_{cu} = 0.35\ \%$$

Per l'acciaio è stato assunto il diagramma elastico perfettamente plastico

$$\varepsilon_{yd} = \frac{f_{yd}}{E_s} \qquad \varepsilon_{yu} = 1.00\ \%$$

A partire da tali ipotesi si è costruito il diagramma di interazione nel piano NM e determinato il valore del momento resistente M_{Rd} a partire dallo sforzo normale sollecitante N_{Ed} si è verificato che risultasse:

$$M_{Rd} = M_{Rd}(N_{Ed}) \leq M_{Ed}$$

o equivalentemente in termini grafici che il punto tensione appartenesse al dominio di interazione di cui sopra.

8.1.5 Verifiche agli SLU delle sezioni per taglio con armatura

La verifica è stata condotta considerando la schematizzazione a traliccio e verificando che l'inclinazione rispetto all'asse della trave risulti contenuta entro:

$$1 \leq \cot\theta \leq 2.5$$

La verifica viene effettuata considerando la disuguaglianza:

$$V_{Rd} \geq V_{Ed}$$

Essendo V_{Ed} il taglio sollecitatante e V_{Rd} quello resistente.

In particolare per il taglio resistente sono stati considerati due tipi di rottura.

Con riferimento alla rottura dell'acciaio dell'armatura trasversale si considera la resistenza di calcolo a taglio trazione:

$$V_{Rsd} = 0.9 \cdot d \cdot \frac{A_{sw}}{s} \cdot f_{yd} \cdot (\cot\theta + \cot\alpha) \cdot \sin\alpha$$

dove α è l'inclinazione della armature a taglio rispetto all'asse della trave, A_{sw} l'area dell'armatura trasversale, s l'interasse delle armature trasversali consecutive, d l'altezza utile della sezione.

Con riferimento alla rottura delle bielle compresse (rottura taglio compressione):

$$V_{Rcd} = 0.9 \cdot d \cdot \alpha_c \cdot b_w \cdot f'_{cd} \cdot \frac{(\cot\theta + \cot\alpha)}{1 + \cot^2\theta}$$

essendo b_w la larghezza della sezione resistente a taglio, f'_{cd} la resistenza ridotta del calcestruzzo d'anima pari a $0.5 \cdot f_{cd}$. Il valore di α_c sarà dato invece dai seguenti casi:

$$\alpha_c = \begin{cases} 1, & N_{Ed} \geq 0 \\ 1 + \frac{\sigma_{cp}}{f_{cd}}, & N_{Ed} < 0 \; e \; 0 \leq \sigma_{cp} \leq 0 \\ 1.25, & N_{Ed} < 0 \; e \; 0.25 f_{cd} \leq \sigma_{cp} \leq 0.5 f_{cd} \\ 2.5(1 - \frac{\sigma_{cp}}{f_{cd}}), & N_{Ed} < 0 \; e \; 0.5 f_{cd} \leq \sigma_{cp} \leq f_{cd} \end{cases}$$

dove σ_{cp} è il valore medio della tensione di compressione.

8.1.6 Verifiche agli SLU per mensole tozze

Con riferimento alla seguente figura, in riferimento al punto C4.1.2.1.5 della circolare [2].

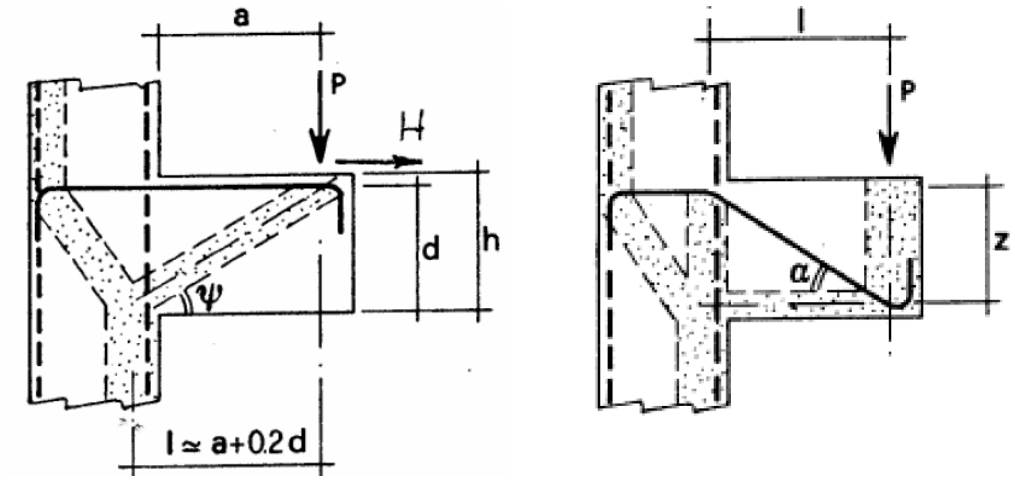

Figura 8-1: *Schema di calcolo – Mensola Tozza.*

nel caso di mensole tozze dove la dimensione $a \leq h$ si considerano due meccanismi resistenti funzionanti in parallelo qualora disposti i due tipi di armatura. Diversamente solo uno dei due.

Il primo meccanismo, sulla base dell'equilibrio al nodo conduce ad una forza resistente della parte in acciaio P_{Rs} data dall'espressione seguente:

$$P_{Rs} = (A_s f_{yd} - H_{ed})\frac{1}{\lambda}$$

dove con λ si indica:

$$\lambda = \text{cotg}\,\psi \cong \frac{l}{0.9d}$$

Dal lato del calcestruzzo possiamo scrivere la resistenza del puntone P_{Rc} data da:

$$P_{Rc} = 0.4bdf_{cd}\frac{c}{1+\lambda^2}$$

essendo $c = 1$ per sbalzi di piastre sprovvisti di armatura a taglio e $c = 1.5$ se provvisti di staffe. La verifica sarà soddisfatta qualora:

$$P_{Rc} \geq P_{Rs} \geq P_{Ed}$$

dove per P_{Ed} si intende l'ente sollecitante.

Il secondo meccanismo è relativo alla figura di destra e conduce ad una forza resistente della parte in acciaio

$$\Delta P_{Rs} = A'_s f_{yd} sin\alpha$$

lato calcestruzzo la forza resistente si determina così:

$$\Delta P_{Rc} = 0.2bdf_{cd} tan\alpha$$

Anche in questo caso dovrà risultare:

$$\Delta P_{Rc} \geq \Delta P_{Rs}$$

La verifica sarà soddisfatta qualora:

$$0.8 \cdot \Delta P_{Rc} \geq 0.8 \cdot \Delta P_{Rs} \geq P_{Ed}$$

avendo ridotto il contributo dell'armatura inclinata del 20%.

Volendo tenere in conto entrambi i meccanismi la verifica si intenderà soddisfatta qualora:

$$P_{Rs} + 0.8 \cdot \Delta P_{Rs} \geq P_{Ed}$$

Oltre alle armature come sopra definite, si disporrà una adeguata armatura trasversale.

In particolare qualora $a \leq h$ si disporrà un'armatura orizzontale pari al 25% di A_s mentre nell'altro caso l'armatura sarà verticale e pari almeno al 50% del taglio sollecitante.

8.1.7 Verifiche agli SLE per tensioni

Le verifiche sulle tensioni in esercizio saranno effettuate con riferimento alle combinazioni rara e quasi permanente. In particolare, per il calcestruzzo saranno verificate:

$$\sigma_c \leq 0.55 f_{ck} = \sigma_c^{(rara)} \qquad (rara)$$
$$\sigma_c \leq 0.40 f_{ck} = \sigma_c^{(q.p.)} \qquad (quasi\ permanente)$$

Mentre per l'acciaio sarà verificato:

$$\sigma_s \leq 0.75 f_{yk} = \sigma_s^{(rara)}$$

Nel caso di elementi piani di calcestruzzo armato ordinario con spessori inferiori ai 50mm valori di σ_c saranno ridotti del 20%.

8.1.8 Verifiche agli SLE per fessurazione

8.1.8.1. Definizione degli stati limite

Si definiscono preliminarmente tre stati limite:

Stato limite	Definizione
decompressione	stato limite di decompressione nel quale, per la combinazione di azioni prescelta, la tensione normale è ovunque di compressione ed al più uguale a 0;
formazione delle fessure	stato limite di formazione delle fessure, nel quale, per la combinazione di azioni prescelta, la tensione normale di trazione nella fibra più sollecitata è: $\sigma_t \leq \frac{f_{ctm}}{1.2}$

apertura delle fessure	stato limite di apertura delle fessure, nel quale, per la combinazione di azioni prescelta, il valore limite di apertura della fessura calcolato al livello considerato è pari ad uno dei seguenti valori nominali: $w_1 = 0.2\ mm$ $w_2 = 0.3\ mm$ $w_4 = 0.4\ mm$

ed ognuno degli stati limite sarà fissato sulla base delle condizioni ambientali. Gli stati limite saranno verificati in rapporto solo a due combinazioni: la frequente e la quasi permanente.

8.1.8.2. Condizioni ambientali

Sulla base di quanto definito nella normativa vigente, vengono definite le condizioni ambientali dell'elemento in calcestruzzo da mettere in opera:

CONDIZIONI AMBIENTALI	CLASSE DI ESPOSIZIONE
Ordinarie	X0, XC1, XC2, XC3, XF1
Aggressive	XC4, XD1, XS1, XA1, XA2, XF2, XF3
Molto aggressive	XD2, XD3, XS2, XS3, XA3, XF4

8.1.8.3. Scelta degli stati limite

La scelta dipende sia dalle condizioni ambientali, ma anche dalla sensibilità delle armature alla corrosione. Le armature ordinarie rientrano nelle poco sensibili e quelle da precompresso nelle sensibili.

Gruppi di esigenze	Condizioni ambientali	Combinazione di azioni	Armatura			
			Sensibile		Poco sensibile	
			Stato limite	w_d	Stato limite	w_d
a	Ordinarie	frequente	ap. fessure	$\leq w_2$	ap. fessure	$\leq w_3$
		quasi permanente	ap. fessure	$\leq w_1$	ap. fessure	$\leq w_2$
b	Aggressive	frequente	ap. fessure	$\leq w_1$	ap. fessure	$\leq w_2$
		quasi permanente	decompressione	--	ap. fessure	$\leq w_1$
c	Molto aggressive	frequente	formazione fessure	--	ap. fessure	$\leq w_1$
		quasi permanente	decompressione	--	ap. fessure	$\leq w_1$

8.2 STRUTTURE IN CARPENTERIA METALLICA

8.2.1 Valutazione della sicurezza e metodo di analisi

Tutte le strutture in acciaio sono state verificate in accordo a quanto prescritto dal DM 14/01/2008.

L'analisi strutturale è avvenuta considerando gli elementi in campo elastico lineare (*Metodo E*).

La capacità resistente delle sezioni è stata determinata anch'essa mediante il metodo elastico (E) considerando quindi un comportamento elastico indefinito dei materiali fino al raggiungimento della condizione di snervamento.

8.2.2 Coefficienti di sicurezza lato materiale

I coefficienti di sicurezza lato materiali adottati sono di seguito riportati:

Tipo di verifica	Coefficiente di sicurezza
Resistenza dei bulloni	$\gamma_{M2} = 1.25$
Resistenza delle saldature a cordone d'angolo	

8.2.3 Verifiche agli SLU delle membrature

Le verifiche agli SLU sono state condotte per le membrature mediante la seguente relazione:

$$\sigma_{x,Ed}^2 + \sigma_{z,Ed}^2 - \sigma_{x,Ed}\sigma_{z,Ed} - 3\tau_{Ed}^2 \leq \left(\frac{f_{yk}}{\gamma_{M0}}\right)^2$$

8.2.4 Verifiche agli SLU delle saldature

Per le unioni saldate previste a cordoni d'angolo con:

$$\sqrt{\sigma_\perp^2 + 3(\tau_\perp^2 + \tau_\parallel^2)} \leq \frac{f_{tk}}{\beta\gamma_{M2}}$$

8.2.5 Verifiche agli SLU delle unioni bullonate

Tutte le unioni bullonate sono state progettate a taglio e le verifiche condotte con i criteri previsti nel DM succitato.

In particolare, per i bulloni di classe 8.8 si assumerà una resistenza a taglio data da:

$$F_{v,Rd} = \frac{0.6 f_{tb} A_{res}}{\gamma_{M2}}$$

mentre per le resistenza a sforzo normale considerata sarà:

$$F_{t,Rd} = \frac{0.9 f_{tb} A_{res}}{\gamma_{M2}}$$

Per la resistenza a rifollamento adotteremo la seguente espressione:

$$F_{b,Rd} = \frac{k \cdot \alpha \cdot f_{tk} A_{res} \cdot d \cdot t}{\gamma_{M2}}$$

Essendo:

- d è il diametro nominale del bullone
- t lo spessore della piastra collegata
- f_{tk} la resistenza a rottura della piastra collegata
- $\alpha = \begin{cases} min\left\{\frac{e_1}{3d_0}; \frac{f_{tb}}{f_t}; 1\right\} \\ min\left\{\frac{p_1}{3d_0} - 0.25; \frac{f_{tb}}{f_t}; 1\right\} \end{cases}$

dove la prima relazione vale per bulloni esterni nella direzione del carico applicato e la seconda per bulloni interni nella direzione del carico applicato.

e_1 rappresenta la distanza tra foro e bordo piastra esterno nella direzione del carico, p_1 l'interasse tra i fori nella direzione del carico.

- $k = \begin{cases} min\left\{2.8\frac{e_2}{d_0} - 1.7; 2.5\right\} \\ min\left\{1.4\frac{p_2}{d_0} - 1.7; 2.5\right\} \end{cases}$

dove la prima relazione vale per bulloni esterni nella direzione perpendicolare del carico applicato e la seconda per bulloni interni nella direzione perpendicolare del carico applicato.

e_2 rappresenta la distanza tra foro e bordo piastra esterno nella direzione del carico, p_2 l'interasse tra i fori nella direzione del carico.

- d_0 diametro nominale del foro.

Si specifica che in accordo con la usuale pratica tecnica tutte le unioni in acciaio sono state verificate considerando non le reazioni sollecitanti effettive ma la rottura dei profilati che ivi concorrono.

9. DESCRIZIONE DEL MODELLO FE

9.1 IPOTESI

Il comportamento strutturale dello scavalco è simulato con modello FE 3D calibrato sulla carpenteria della struttura riportata nella Figura 1-2. Nel modello sono stati utilizzati elementi "Beam" e "Truss" lineari per simulare le proprietà delle strutture. L'offsett tra l'asse delle travi principali e la base dei montanti è stato modellato con elementi finiti "Rigid Link".

I carichi agenti sulla soletta sono stati applicati ad elementi plate atti solo a trasferire il carico alle travi, denominati "Load Patch".

L'azione irrigidente data dalla soletta di calcestruzzo per gli effetti flessionali nel piano orizzontale e torsionali sono stati trascurati nella modellazione. Inoltre anche la variazione inerziale della trave per effetto del comportamento a sezione mista è stato trascurato per il cacolo delle sollecitazioni.

Si è tenuto in conto della collaborazione acciaio-cls solo a livello di analisi sezionale e per il calcolo delle deformazioni sul piano verticale.

Il modello è stato redatto in due versioni come descritto a seguire:

- Modello **R10** finalizzato al dimensionamento statico, in cui i montanti sono considerati incernierati alla base anche attorno al piano debole. In tal modo non si crea collaborazione tra la copertura, i montanti e le travi principali ai fini della resistenza ai carichi verticali, cosi che il dimensionamento delle travi principali sia conservativo. I vincoli esterni in questo modello sono stati schematizzati come semplici vincoli traslazionali applicati ai nodi della trave.
- Modello **R12** finalizzato all'analisi sismica e all'estrazione delle forze sugli appoggi e in fondazione. In questo modello i montanti sono collegati con continuità flessionale attorno al piano debole in modo tale che si possa eseguire un'analisi sismica multimodale con spettro di risposta. Inoltre, è stato modellato un sistema di condensazione agli appoggi tale per cui si riescano ad estrarre agilmente le forze sugli appoggi e in fondazione.

9.2 CARATTERISTICHE GEOMETRICHE E VINCOLI

9.2.1 Modello R10

Le seguenti immagini mostrano le principali peculiarità del modello FE R10.

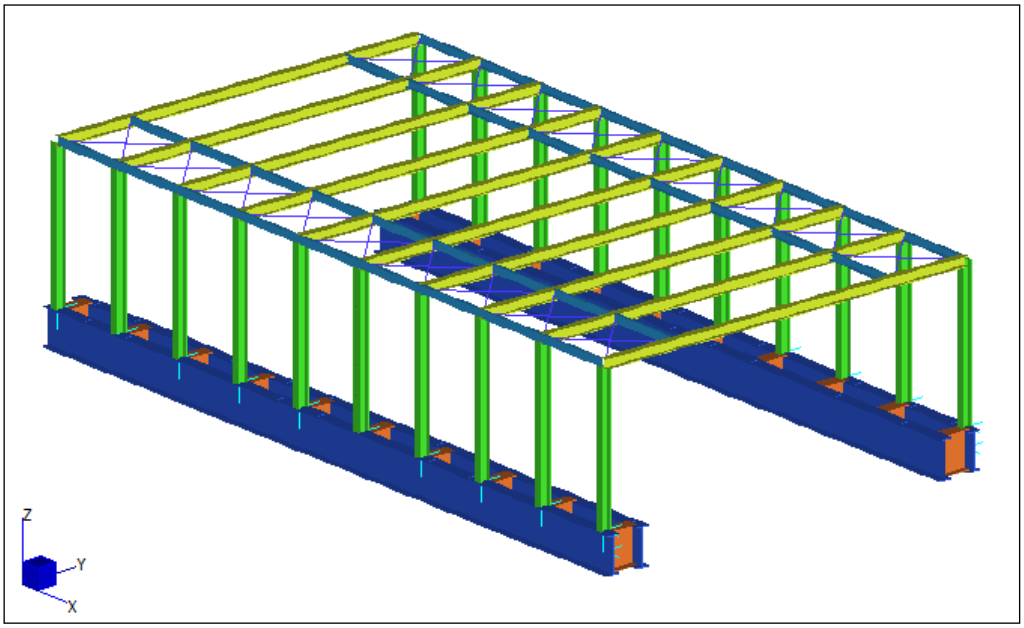

Figura 9-1: *Vista 3D del modello FE R10*

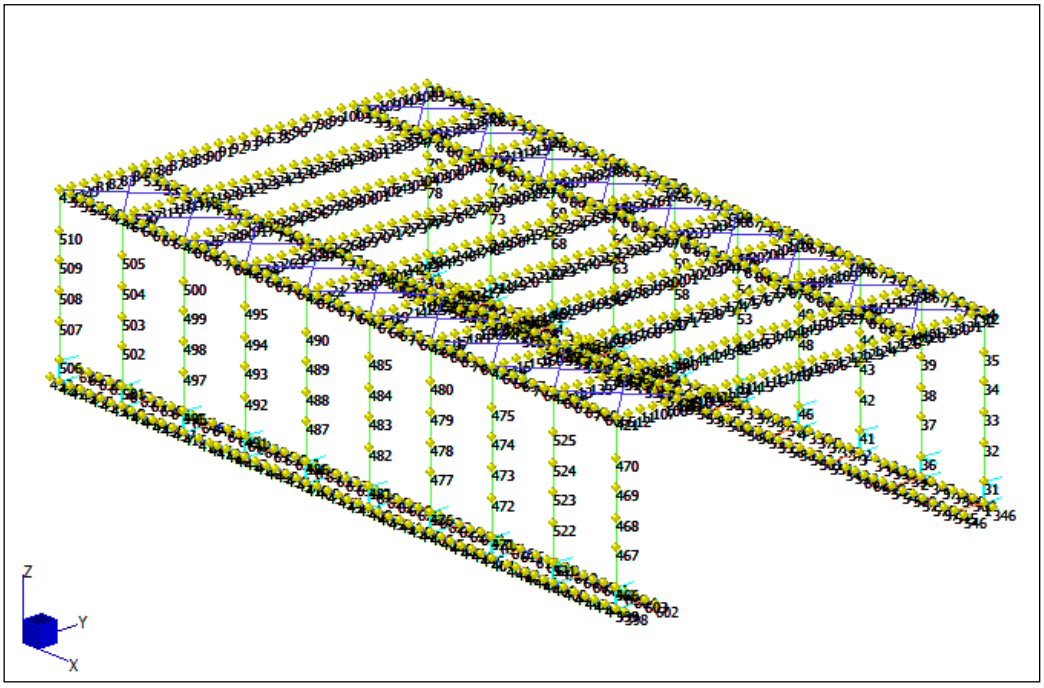

Figura 9-2: *Linea d'asse e numerazione dei nodi del modello FE R10*

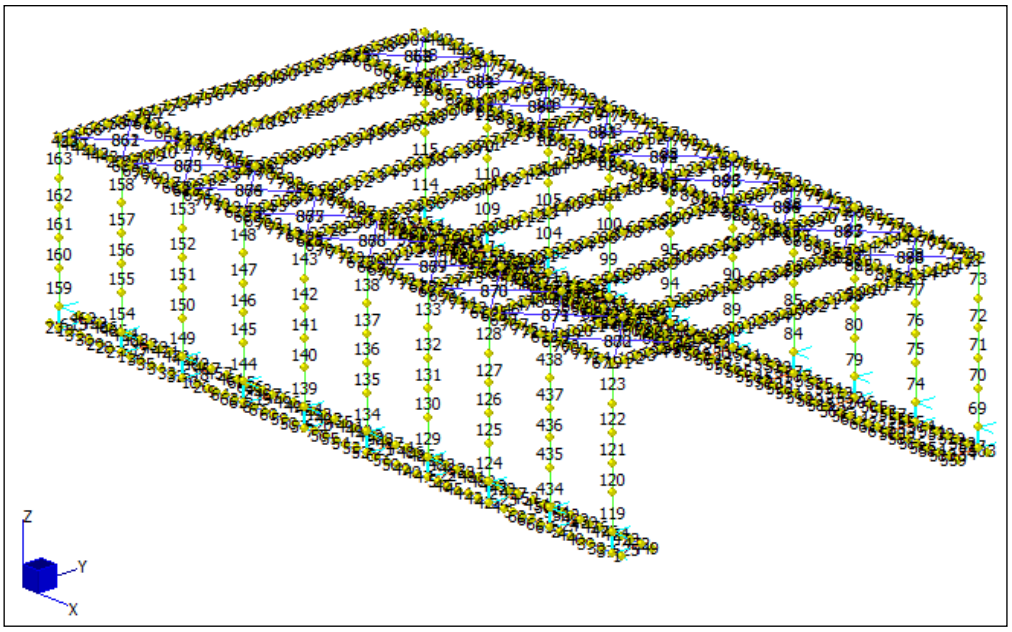

Figura 9-3: *Linea d'asse e numerazione degli elementi "Beam" del modello FE R10*

Le seguenti immagini mostrano i vincoli esterni (linee spesse nere rappresentano i vincoli traslazionali) e gli svincoli rotazionali "End release" (linee color magenta).

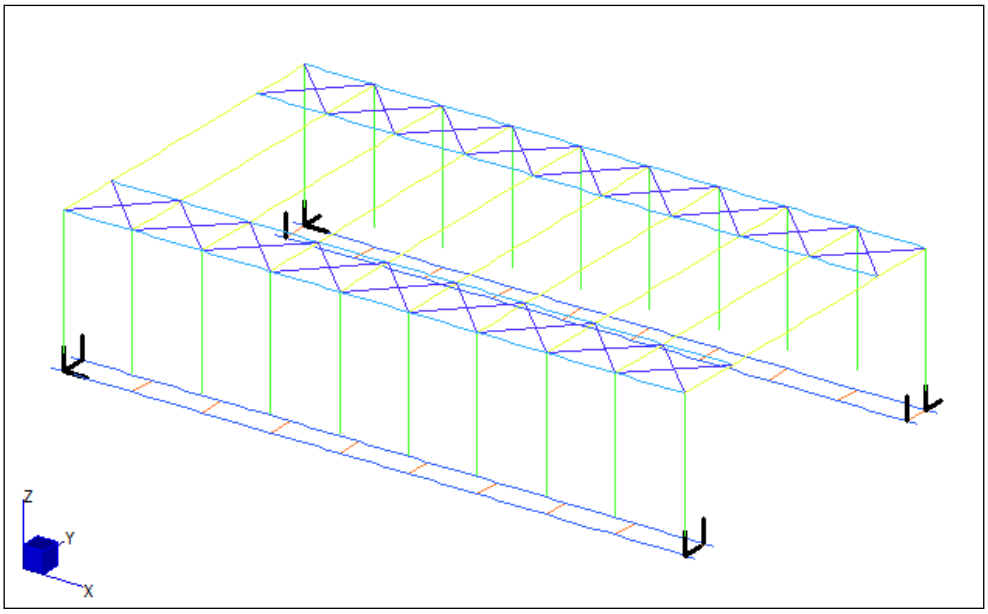

Figura 9-4: *Schema vincoli esterni modello FE R10*

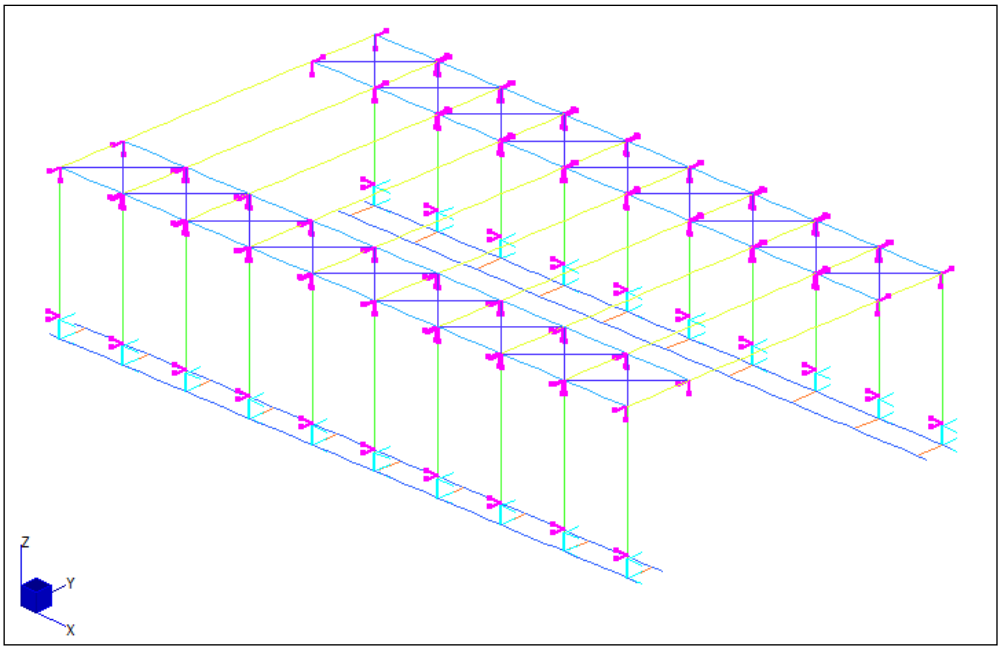

Figura 9-5: Rilasci rotazionali "*End release" assegnati agli elementi beam modello FE R10*

9.2.2 Modello R12

Le seguenti immagini mostrano le principali peculiarità del modello FE R12. In particolare si sono modellati con beam infinatemente rigidi i baggioli e la fondazione della spalla. Mentre attraverso i rigid link si sono modellati gli offsset asse-intradosso trave e tra la base dei baggioli e l'estradosso della fondazione.

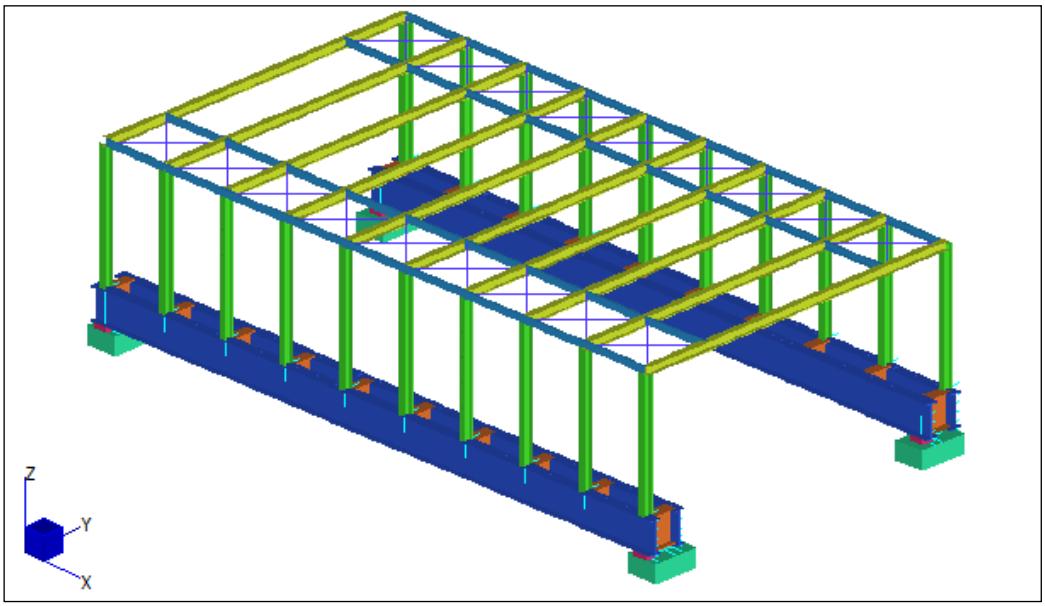

Figura 9-6: *Vista 3D del modello FE R12*

Le seguenti immagini mostrano solo la porzione del modello comprendente le travi principali e il sistema di condensazione creato, i vincoli esterni (linee spesse nere rappresentano i vincoli traslazionali, rosse i vincoli rotazionali), gli svincoli rotazionali "End release" (linee color magenta) e gli svincoli traslazionali (linee color verde).

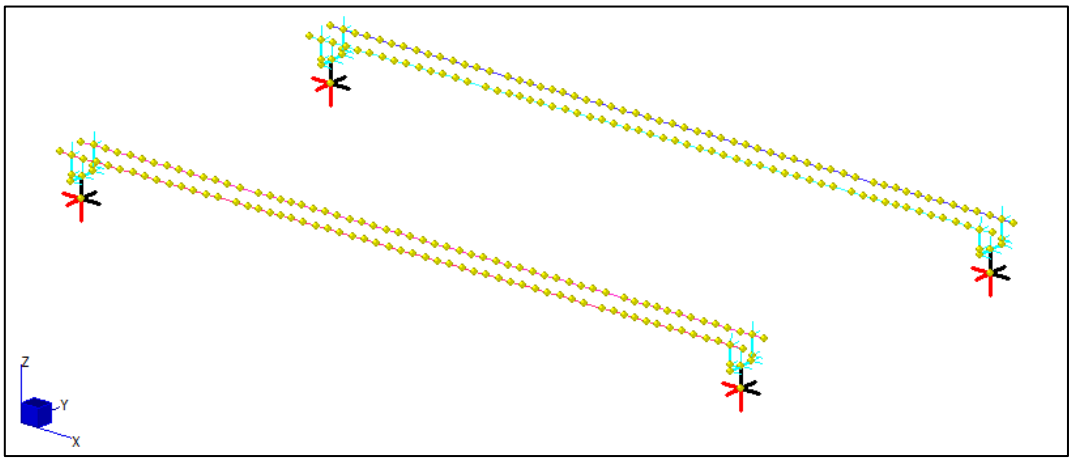

Figura 9-7: *Vista modello FE R12 assi e nodi*

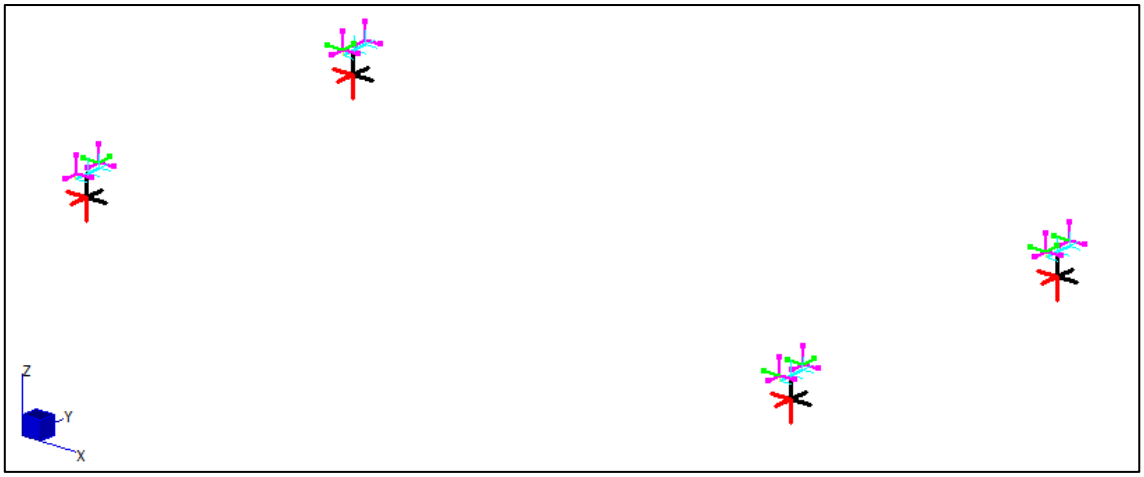

Figura 9-8: Rilasci rotazionali "*End release" assegnati agli elementi beam modello FE R12*

9.3 ANALISI DEI CARICHI E APPLICAZIONE AL MODELLO FE

9.3.1 Carichi permanenti

9.3.1.1. G00 – Peso Proprio

Il peso proprio della carpenteria metallica è stato calcolato automaticamente dal programma, una volta inserite le caratteristiche dei materiali e delle sezioni. Si è considerato il peso specitico incrementato a 90 kN/m^3 per tenere in conto del peso di piastre, bulloneria.

9.3.1.2. G01 – Carico Permanente Passerella

La passerella è realizzata con una soletta in calcestruzzo, avente spessore totale pari a 15cm. Il carico permanente della soletta è pari a:

$g_{01} = \gamma_{CLS} \cdot h_T = 25.00 \cdot 0.15 = 3.75$ kN/m^2

Si riporta di seguito lo schema di carico applicato al modello.

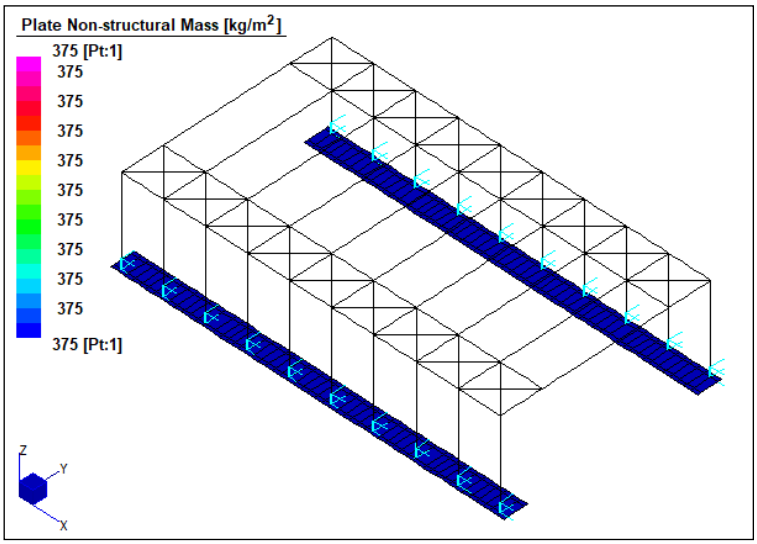

Figura 9-9: *G01 – Carico Permanente Sbalzo.*

9.3.1.3. G02 – Carico Permanente dei Pannelli Fonoassorbenti

Il peso dei pannelli fonoassorbanti è stato applicato su montanti e sui traversi ed è stato assunto pari a:

- Carico sui montanti: $1.00kN/m^2 \cdot 7.00m = 7.00kN/m$
- Carico sui traversi: $1.00kN/m^2 \cdot 3.00m = 3.00kN/m$

Il carico è stato applicato sulle travi principali interne e sui traversi. Sono stati definiti due casi di carico:

- G02a – Carico Pannelli Fonoassorbenti: l'azione è stata applicata su entrambe le travi principali interne e sui traversi;
- G02b – Carico Pannelli Fonoassorbenti DX: l'azione è stata applicata solo sulla trave principale interna, lato destro, e sui traversi.

La figura seguente riporta il carico applicato alla struttura.

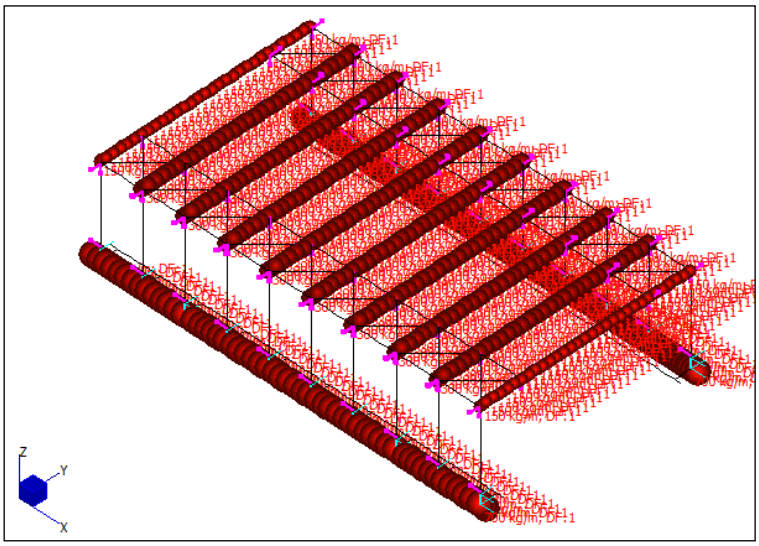

Figura 9-10: *G02a – Carico Pannelli Fonoassorbenti.*

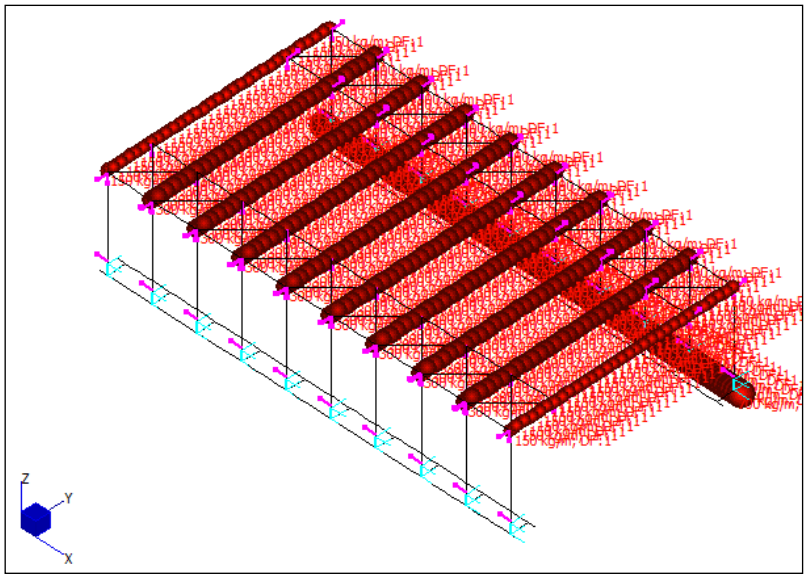

Figura 9-11: *G02b – Carico Pannelli Fonoassorbenti DX.*

9.3.2 Carichi variabili

9.3.2.1. Q00 – Sovraccarico accidentale sulla passerella

Il sovraccarico accidentale sui marciapiedi è stato fissato pari a 10kN/m^2.

Tale carico non è stato considerato contemporaneo alle azioni aerodinamiche da transito dei convogli ferroviari ed è stato applicato allo sbalzo. Per questo tipo di carico distribuito non deve applicarsi l'incremento dinamico. La figura seguente riporta il carico applicato alla struttura.

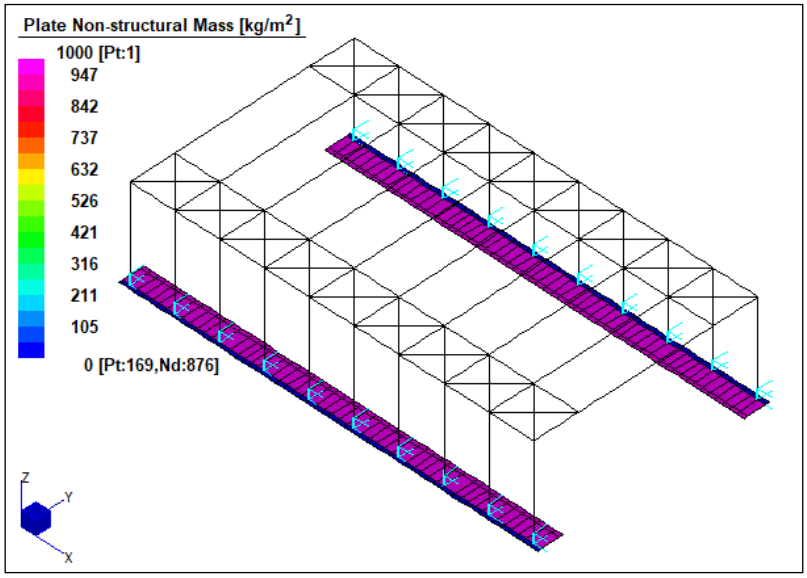

Figura 9-12: *Q00 – Sovraccarico Accidentale sul camminamento della passerella*

9.3.2.2. Q01 – Azione della Neve

9.3.2.3. Carico Neve

Il carico provocato dalla neve sulle coperture è stato valutato mediante la seguente espressione:

$$q_s = \mu_i \cdot q_{sk} \cdot C_E \cdot C_t$$

essendo q_s è il carico neve sulla copertura, μ_i è il coefficiente di forma della copertura, q_{sk} è il valore caratteristico di riferimento del carico neve al suolo, C_E è il coefficiente di esposizione, C_t è il coefficiente termico.

9.3.2.4. Valore caratteristico del carico neve al suolo

Il carico neve al suolo dipende dalle condizioni locali di clima e di esposizione, considerata la variabilità delle precipitazioni nevose da zona a zona.

		q_{sk} [KN/m^2]	
Zona I Alpina	Aosta, Belluno, Bergamo, Biella, Bolzano, Brescia, Como, Cuneo, Lecco, Pordenone, Sondrio, Torino, Trento, Udine, Verbania, Vercelli, Vicenza	1.50	$a_s \leq 200m$
		$1.39 \cdot [1 + (a_s/728)^2]$	$a_s > 200m$
Zona I Mediterranea	Alessandria, Ancona, Asti, Bologna, Cremona, Forlì-Cesena, Lodi, Milano, Modena, Novara, Parma, Pavia, Pesaro e Urbino, Piacenza, Ravenna, Reggio Emilia, Rimini, Treviso, Varese	1.50	$a_s \leq 200m$
		$1.35 \cdot [1 + (a_s/602)^2]$	$a_s > 200m$
Zona II	Arezzo, Ascoli Piceno, Bari, Campobasso, Chieti, Ferrara, Firenze, Foggia, Genova, Gorizia, Imperia, Isernia, La Spezia, Lucca, Macerata, Mantova, Massa Carrara, Padova, Perugia, Pescara, Pistoia, Prato, Rovigo, Savona, Teramo, Trieste, Venezia, Verona	1.00	$a_s \leq 200m$
		$0.85 \cdot [1 + (a_s/481)^2]$	$a_s > 200m$
Zona III	Agrigento, Avellino, Benevento, Brindisi, Cagliari, Caltanisetta, Carbonia-Iglesias, Caserta, Catania, Catanzaro, Cosenza, Crotone, Enna, Frosinone, Grosseto, L'Aquila, Latina, Lecce, Livorno, Matera, Medio Campidano, Messina, Napoli, Nuoro, Ogliastra, Olbia, Tempio, Oristano, Palermo, Pisa, Potenza, Ragusa, Reggio Calabria, Rieti, Roma, Salerno, Sassari, Siena, Siracusa, Taranto, Terni, Trapani, Vibo Valentia, Viterbo	0.60	$a_s \leq 200m$
		$0.51 \cdot [1 + (a_s/481)^2]$	$a_s > 200m$

Tabella 2: Valori caratteristici del carico neve al suolo.

9.3.2.5. Coefficiente di esposizione

Il coefficiente di esposizione invece viene fornito dalla seguente tabella

Topografia	Descrizione	C_E
Battuta dai venti	Aree pianeggianti non ostruite esposte su tutti i lati, senza costruzioni o alberi più alti.	0.90
Normale	Aree in cui non è presente una significativa rimozione di neve sulla costruzione prodotta dal vento, a causa del terreno, altre costruzioni o alberi.	1.00
Riparata	Aree in cui la costruzione considerata è sensibilmente più bassa del circostante terreno o circondata da costruzioni o alberi più alti	1.10

Tabella 3: Valori di C_E per diverse classi di topografia.

9.3.2.6. Coefficiente termico

Il coefficiente termico può essere utilizzato per tener conto della riduzione del carico neve a causa dello scioglimento della stessa, causata dalla perdita di calore della costruzione. Tale coefficiente tiene conto delle proprietà di isolamento termico del materiale utilizzato in copertura. In assenza di uno specifico e documentato studio, deve essere utilizzato $C_t = 1$.

9.3.2.7. Coefficiente di forma delle coperture

Il coefficiente di forma delle coperture viene fornito nella norma tecnica vigente [1] e nella relativa circolare [2].

9.3.2.8. Definizione del carico agente

Si determina il carico neve al suolo considerando che:

Zona = **Zona I Alpina** $\qquad a_s = \mathbf{471m} > 200m$

$$q_{sk} = 1.39 \cdot [1 + (a_s/728)^2] = 1.39 \cdot [1 + (471/728)^2] = \mathbf{1.97\ KN/m^2}$$

Assumendo il seguente coefficiente di esposizione e quello termico:

Topografia = **Normale** $\Longrightarrow C_E = 1.00 \qquad C_T = 1.00$

e trattandosi di copertura ad una falda, si valuta il coefficiente di forma della copertura:

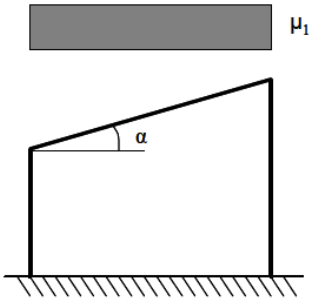

$$\alpha = 0° \implies \mu_1 = 0.8$$

ed infine il carico neve risulta pari a:

$$q_s = \mu_i \cdot q_{sk} \cdot C_E \cdot C_t = 0.8 \cdot 1.97 \cdot 1.00 \cdot 1.00 = \mathbf{1.58\ kN/m^2}$$

La copertura si consdera come se fosse completamente chiusa prevedendo una futura chiusura.

Il carico sulla singola trave di copertura vale pertanto: 1.58 kN/m^2 · 3.00m = 4.74 kN/m (la metà per la trave di bordo). Segue l'immagine del modello con il carico applicato.

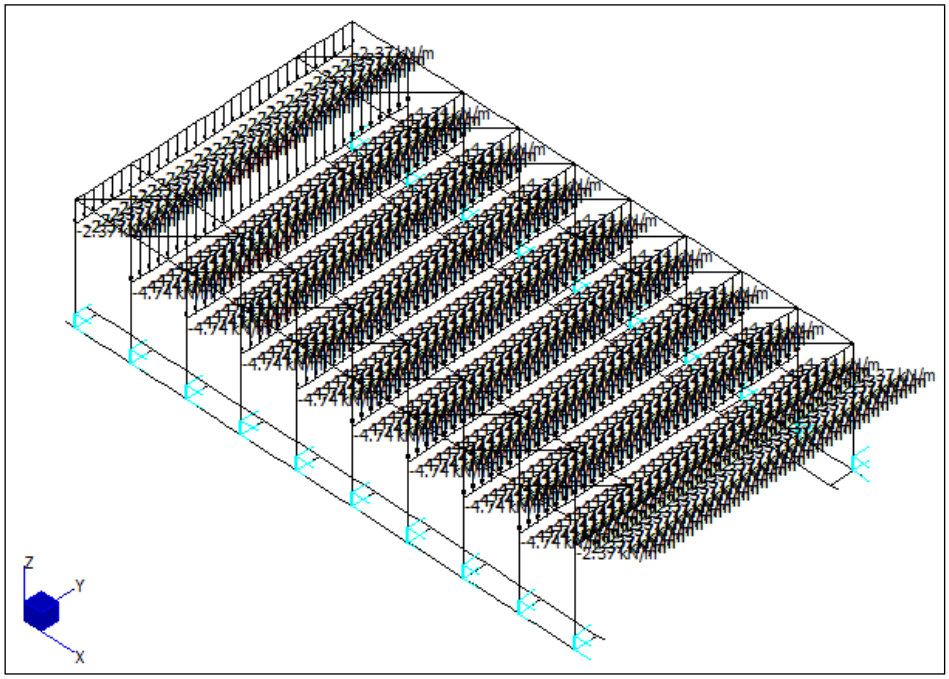

Figura 9-13: *Q01 – Carico Neve.*

9.3.3 Q02 – Azione del Vento

Il vento, la cui direzione si considera generalmente orizzontale, esercita sulle costruzioni azioni che variano nel tempo e nello spazio provocando, in generale, effetti dinamici.

Le azioni sono state ricondotte ad azioni statiche equivalenti poichè trattasi di costruzioni usuali non di notevole altezza o notevole flessibilità.

9.3.3.1. Velocità di riferimento

La velocità di riferimento $\mathrm{v_b}$ è il valore caratteristico della velocità del vento a 10 m dal suolo su un terreno di categoria di esposizione II, mediata su 10 minuti e riferita ad un periodo di ritorno di 50 anni.

Di seguito si riporta l'espressione da normativa.

$\mathrm{v}_b = \mathrm{v}_{b,0}$	per $\mathrm{a}_s \leq \mathrm{a}_0$
$\mathrm{v}_b = \mathrm{v}_{b,0} + k_a(a_s - a_0)$	per $\mathrm{a}_0 \leq \mathrm{a}_s \leq 1500m$

essendo $\mathrm{v}_{b,0}$, a_0, k_a forniti dalla norma sulla base della regione in cui sorge la costruzione in esame; a_s è invece la quota del sito sul livello del mare espressa in metri.

Zona	Descrizione	$\mathrm{v}_{b,0}$	a_0	k_a
1	Valle d'Aosta, Piemonte, Lombardia, Trentino Alto Adige, Veneto, Friuli Venezia Giulia (con l'eccezione della provincia di Trieste)	25	1000	0.010
2	Emilia Romagna	25	750	0.015
3	Toscana, Marche, Umbria, Lazio, Abruzzo, Molise, Puglia, Campania, Basilicata, Calabria (esclusa la provincia di Reggio Calabria)	27	500	0.020
4	Sicilia e provincia di Reggio Calabria	28	500	0.020
5	Sardegna (zona a oriente della retta congiungente Capo Teulada con l'Isola di Maddalena)	28	750	0.015
6	Sardegna (zona a occidente della retta congiungente Capo Teulada con l'Isola di Maddalena)	28	500	0.020
7	Liguria	28	1000	0.015
8	Provincia di Trieste	30	1500	0.010
9	Isole (con l'eccezione di Sicilia e Sardegna) e mare aperto	31	500	0.020
		[m/s]	[m]	[1/s]

Tabella 4: Valori dei parametri $v_{b,0}$, a_0 e k_a

9.3.3.2. Pressione del vento

La pressione del vento è data dalla espressione seguente:

$$p = q_b \cdot c_e \cdot c_p \cdot c_d$$

essendo q_b la pressione cinetica di riferimento, c_e il coefficiente di esposizione, $c_p$il coefficiente di forma funzione della tipologia e della geometria della costruzione e del suo orientamento rispetto alla direzione del vento, c_d il coefficiente dinamico.

9.3.3.3. Pressione cinetica di riferimento

La pressione cinetica di riferimento espressa in N/m^2 è data dall'espressione seguente:

$$q_b = \frac{1}{2} \cdot \rho \cdot v_b^2$$

essendo v_b la velocità di riferimento del vento espressa in m/s, ρ la densità dell'aria assunta convenzionalmente costante pari a 1.25 kg/m^3.

9.3.3.4. Coefficiente di esposizione

E' un coefficiente che dipende dall'altezza del filetto fluido considerato rispetto al suolo che per altezze del suolo non superiori al 200m è dato da:

$c_e(z) = k_r^2 \cdot c_t \cdot ln\left(\frac{z}{z_0}\right)\left[7 + c_t \cdot ln\left(\frac{z}{z_0}\right)\right]$	per $z \geq z_{min}$
$c_e(z) = c_e(z_{min})$	per $z < z_{min}$

dove k_r, z_0, z_{min} sono assegnati in funzione della categoria di esposizione del sito ove sorge la costruzione; c_t è il coefficiente di topografia che puà essere posto uguale ad 1.

I coefficienti suddetti sono determinati sulla base della seguente tabella:

Categoria di esposizione del sito	k_r	z_0 **(m)**	z_{min} **(m)**
I	0.17	0.01	2
II	0.19	0.05	4
III	0.20	0.10	5
IV	0.22	0.30	8
V	0.23	0.70	12

Tabella 5: Parametri per la definizione del coefficiente di esposizione.

Per definire la categoria di esposizione del sito si devono decidere sia la *classe di rugosità* che *le fascie di distanza dal mare*.

La rugosità viene determinata mediante la seguente tabella:

Classe di rugosità del terreno	Descrizione
A	Aree urbane in cui almeno il 15% della superficie sia coperto da edifici la cui altezza media superi i 15m
B	Aree urbane (non di classe A), suburbane, industriali e boschive
C	Aree con ostacoli diffusi (alberi, case, muri, recinzioni,....); aree con rugosità non riconducibile alle classi A, B, D
D	Aree prive di ostacoli (aperta campagna, aeroporti, aree agricole, pascoli, zone paludose o sabbiose, superfici innevate o ghiacciate, mare, laghi,....)
L'assegnazione della classe di rugosità non dipende dalla conformazione orografica e topografica del terreno. Affinché una costruzione possa dirsi ubicata in classe A o B è necessario che la situazione che contraddistingue la classe permanga intorno alla costruzione per non meno di 1 km e comunque non meno di 20 volte l'altezza della costruzione. Laddove sussistano dubbi sulla scelta della classe di rugosità, a meno di analisi dettagliate, verrà assegnata la classe più sfavorevole.	

Tabella 6: Classi di rugosità del terreno.

mentre le fascie sulla base della figura sotto:

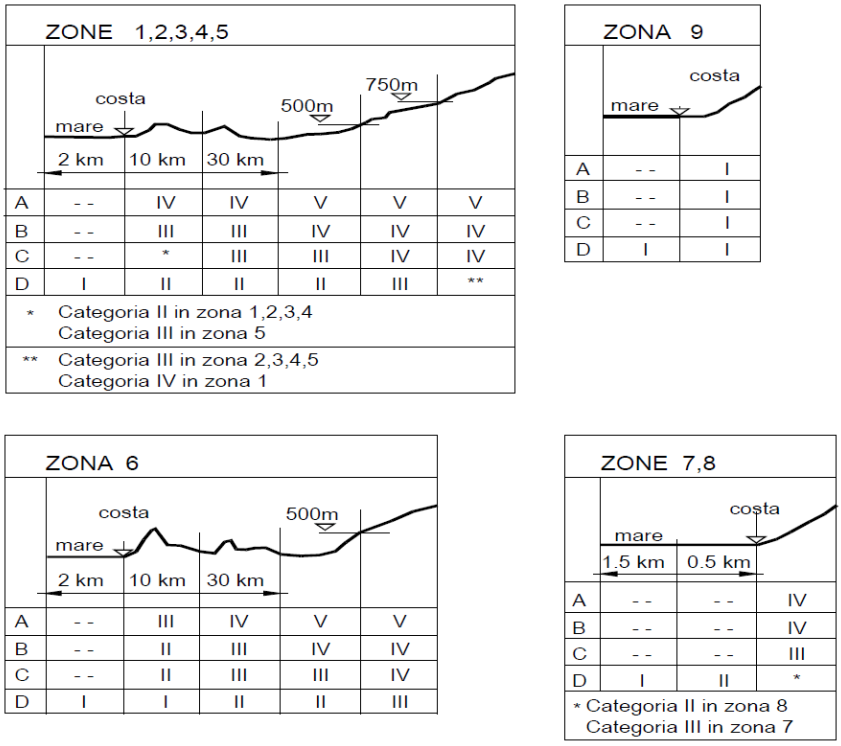

Figura 9-14: *Definizione delle categorie di esposizione.*

9.3.3.5. Coefficiente dinamico

Il coefficiente dinamico tiene in conto degli effetti riduttivi associati alla non contemporaneità delle massime pressioni locali e degli effetti amplificativi dovuti alla risposta dinamica della struttura.

Esso può essere assunto cautelativamente pari ad 1 nelle costruzioni di tipologia ricorrente, quali gli edifici di forma regolare non eccedenti 80 m di altezza ed i capannoni industriali, oppure può essere determinato mediante analisi specifiche o facendo riferimento a dati di comprovata affidabilità.

9.3.3.6. Definizione del carico agente

Definita la zona in cui sorgerà la struttura, si definisco i parametri utili per il calcolo della pressione del vento:

Zona = **Zona 1** ⇒	$v_{b,0} = 25$ m/s	$k_a = 0.010$	$a_0 = 1000\ m$

da cui la velocità e la pressione di riferimento:

$a_s = 471\ m \leq a_0$ $T_R = 50\ anni$	$\alpha_R(T_R) = 1.00073$ $v_b = \alpha_R\ v_{b,0} = 25.018\ m/s$	$q_b = \frac{1}{2} \cdot \rho \cdot v_b^2 = 0.5 \cdot 1.25 \cdot 25^2 = 0.42\ kN$ $= \mathbf{0.39\ KN/m^2}$

Il coefficiente di esposizione si determina in funzione dei seguenti parametri:

Zona = **Zona 1**	Rugosità = **D**	Fascia = **sotto i 500m**	⇒	Categoria di esposizione = **II**

Dai quali si determinano:

Categoria di esposizione = **II**	⇒	$k_r = \mathbf{0.19}$	$z_0 =$**0.05**	$z_{min} = 4$

Infine, il coefficiente di esposizione, assumento il coefficiente di topografia pari a $c_t = 1$, risulta:

$$z = 9.6\,m > z_{min} = 4 \Rightarrow \mathrm{c}_e(z) = \mathbf{2.326}$$

Assumendo il coefficiente dinamico $c_d = 1$, si ottiene:

$$\frac{\mathrm{p}}{\mathrm{c}_p} = \mathrm{q}_b \cdot \mathrm{c}_e \cdot \mathrm{c}_d = 0.39 \cdot 2.326 \cdot 1 = \mathbf{0.64}\ \boldsymbol{KN/m^2}$$

In accordo con C3.3.10.3.2 [2], si assume un coefficiente di forma pari a $c_p = 1.2$.

Lo schema di carico dell'azione del vento sarà presentato nel paragrafo successivo, a seguito delle considerazioni dovute all'effetto aerodinamico associato al passaggio dei convogli.

9.3.4 Effetti aerodinamici associati al passaggio dei convogli

Il passaggio dei convogli ferroviari induce sulle superfici situate in prossimità della linea ferroviaria (per esempio barriere antirumore) onde di pressione e depressione secondo gli schemi riportati nel seguito.

Le azioni possono essere schematizzate mediante carichi equivalenti agenti nelle zone prossime alla testa ed alla coda del treno nei casi in cui, in ragione della velocità della linea, non si instaurino amplificazioni dinamiche significative per il comportamento degli elementi strutturali investiti dalle azioni aerodinamiche.

Esse dovranno essere utilizzate per il progetto delle barriere e delle relative strutture di sostegno (cordoli, solette, fondazioni, ecc.).

I carichi equivalenti sono considerati valori caratteristici delle azioni. In ogni caso le azioni aerodinamiche dovranno essere cumulate con l'azione del vento.

9.3.4.1. Superfici verticali parallele al binario

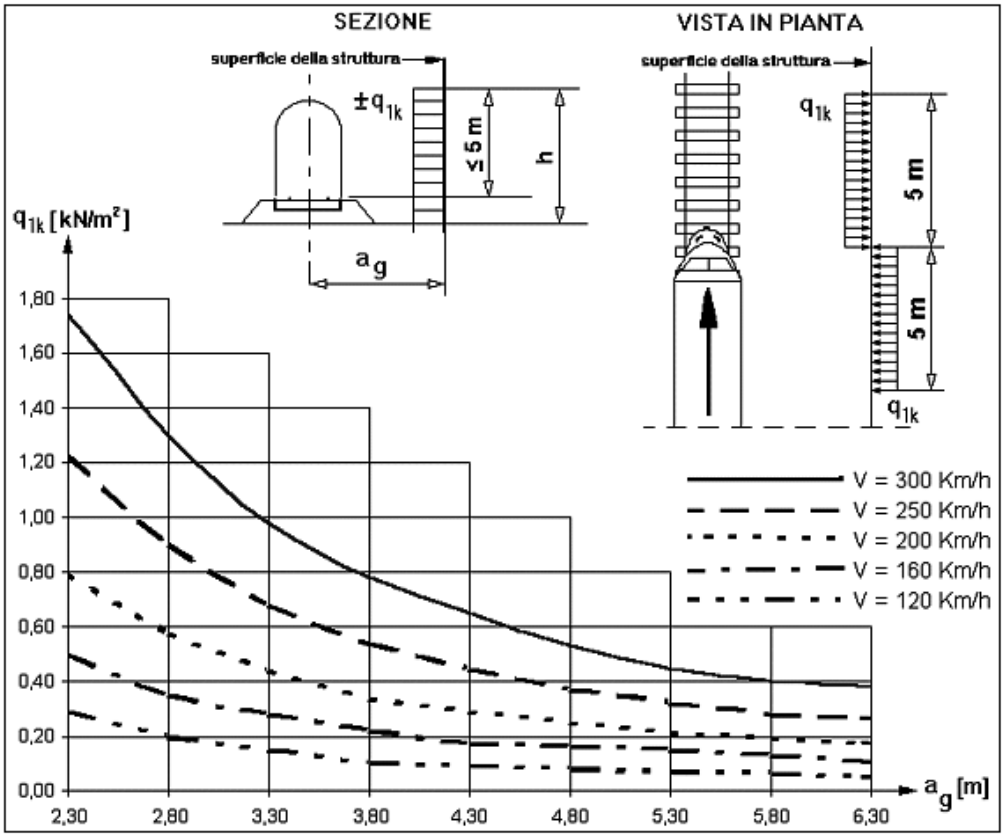

Figura 9-15: *Valori caratteristici della azioni q_{1k} per superfici verticali parallele al binario.*

Il valore dell'effetto è ricondotto a due distanze ed alla velocità di percorrenza della linea ricavando tale valore dalla figura precedente (Figura *9-15*). Scelta che sia la distanza a_g si determina il valore base dell'effetto aereodinamico q_{1k}. Tale valore può essere di pressione o di depressione ed è relativo a treni con forme aereodinamiche sfavorevoli. Il valore può essere corretto per mezzo del valore k_1 di seguito fornito:

$k_1 = 1.00$	per convogli con aereodinamiche sfavorevoli
$k_1 = 0.85$	per convogli formati da carrozze con sagome arrotondate
$k_1 = 0.60$	per treni aereodinamici

Per piccole superfici verticali (per altezza totali inferiori ad 1m o larghezze inferiori ai 2.5m) si dovrà incrementare il valore base dell'azione mediante un fattore

$k_2 = 1.30$	per piccole superfici

9.3.4.2. Superfici orizzontali al di sopra del binario

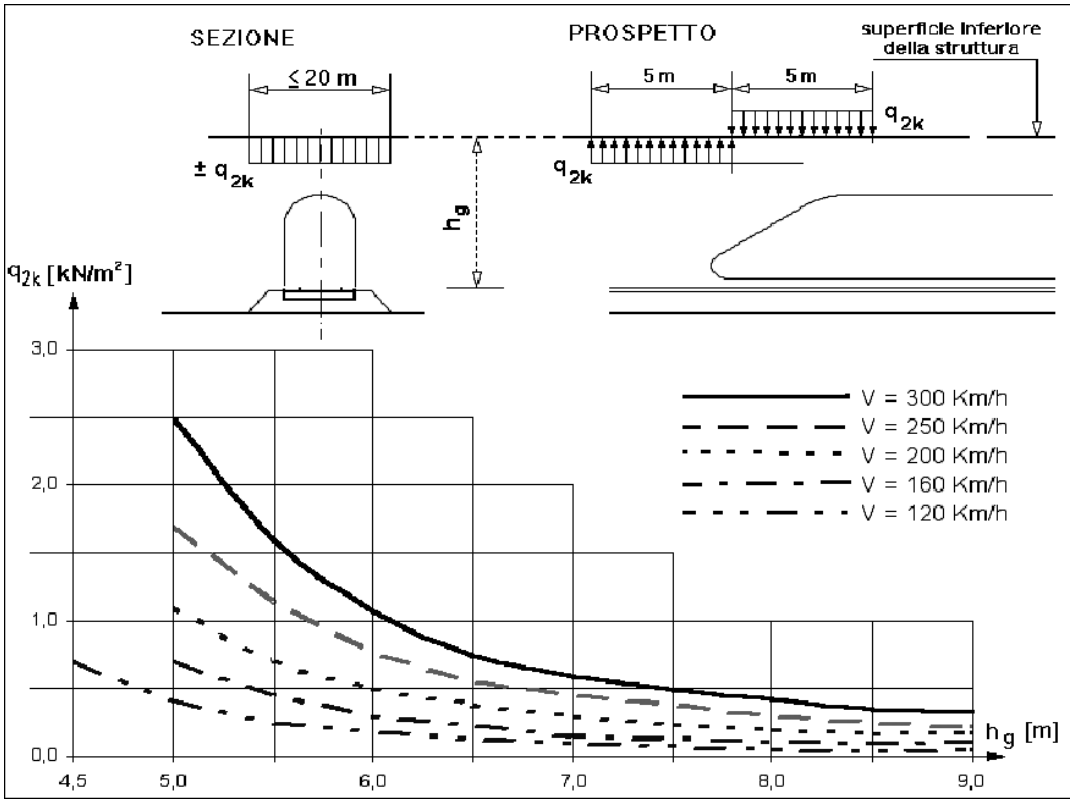

Figura 9-16: *Valori caratteristici della azioni q_{2k} per superfici orizzontali al di sopra del binario.*

La sovrappressione q_{2k} del vento si determina considerando la distanza della superficie orizzontale dal piano del ferro (PF) indicata in figura con h_g. Il caricamento andrà esteso fino a 10m oltre la mezzeria del binario per ciascun lato con indicato in Figura *9-16*. Qualora sotto la superficie transitino due binari i valori andranno cumulati. Per più di due binari si considereranno solo due di essi per volta.

L'azione aereodinamica, anche in questo caso, potrà essere ridotta con il valore k_1 fornito nel paragrafo 9.3.4.1 a seconda della tipologia di convoglio in attraversamento.

Qualora si tratti di valutare la sovrappressione su elementi nastriformi quali ad esempio passerelle sui binari, si potrà ridurre il valore fornito con un coefficiente pari a 0.75 solo per una larghezza pari a 1.5m.

9.3.4.3. Superfici orizzontali adiacenti al binario

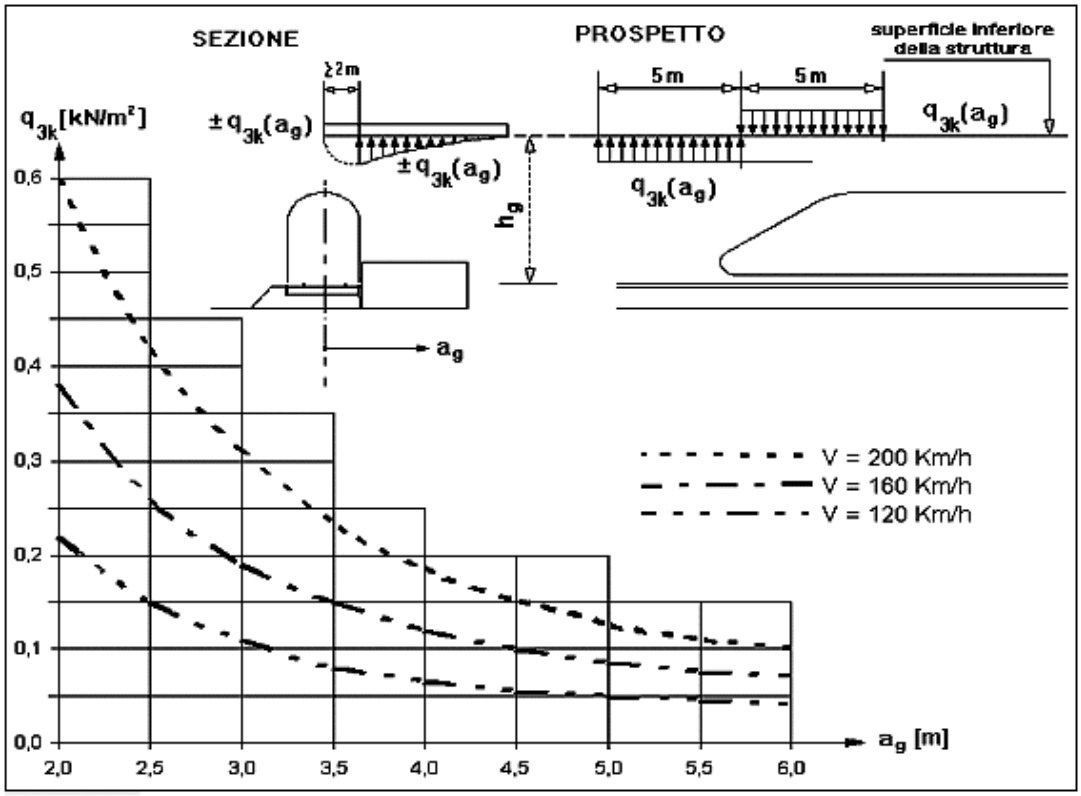

Figura 9-17: *Valori caratteristici della azioni q_{3k} per superfici orizzontali adiacenti al binario.*

I valori caratteristici q_{3k} dell'azione sono forniti in Figura *9-17* a seconda della distanza a_g dall'asse del binario. Per tali valori non si applica il coefficiente k_1 sull'aereodinamicità del convoglio. Qualora presenti più binari le azioni saranno sommate.

Per tenere conto della distanza h_g del binario (PF) dalla superficie si adotta il coefficiente riduttivo k_3:

$k_3 = 1.00$	$h_g \leq 3.80\ m$
$k_3 = \frac{(7.5 - h_g)}{3.7}$	$3.80\ m \leq h_g \leq 7.50\ m$
$k_3 = 0.00$	$7.50\ m \leq h_g$

9.3.4.4. Strutture con superfici multiple a fianco del binario sia verticali che orizzontali o inclinate

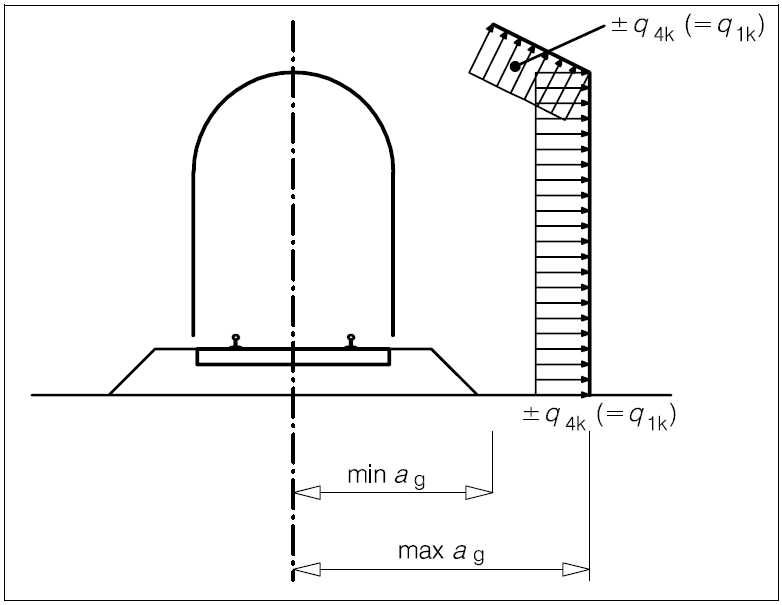

Figura 9-18: *Definiziione della distanza max a_g e min a_g dall'asse del binario.*

Il valore caratteristico q_{3k} viene fornito nella Figura *9-18* in dipendenza di una distanza fittizia a'_g data dal seguente valore:

$$a'_g = min\, a_g + max\ \ a_g$$

Per valori fino a $max\ \ a_g$ inferiori ai 6m. Per valori superiori si adotterà il valore di 6m. Possono esere usati i valori di k_1 e k_2 forniti nel paragrafo 9.3.4.1.

9.3.4.5. Strutture con superfici che circondano integralmente il binario

Indipendentemente dalla forma del treno si calcolerà il valore caratteristico q_{4k} secondo il seguente schema:

$q_{4k} = k_4 \cdot q_{1k}$	$k_4 = 2.0$	per le superfici verticali
$q_{5k} = k_5 \cdot q_{2k}$	$k_5 = 2.5$	se la struttura racchiude 1 binario
	$k_5 = 3.5$	se la struttura racchiude 2 binari

Calcolando i valori di q_{1k} e q_{2k} per come detto in precedenza.

9.3.4.6. Valore minimo delle azioni combinate da vento e aereodinamica

In accordo a quanto indicato nelle norme [1] in nessun caso l'azione combinata con l'azione del vento valutata come ai paragrafi precedenti per tutte le verifiche SLU ed SLE sarà posta al di sotto di 1.50KN/m^2.

9.3.4.7. Definizione del carico agente

Si considera il caso di superfici che circondano integralmente il binario.

Sulle superfici verticali si considera la seguente pressione:

V [km/h]	160
a_g [m]	4.87
$q_{1k}\ [kN/m^2]$	0.20
k_4	2.0

$$q_{a,v} = \pm\, k_4 \cdot q_{1k} = 0.4\ \ kN/m^2$$

Sulle superfici orizzontali si considera la seguente pressione:

V [km/h]	160
h_g [m]	7.00
$q_{2k}\ [kN/m^2]$	0.25
k_5	3.5

$$q_{a,h} = \pm k_5 \cdot q_{2k} = 0.88\ \ kN/m^2$$

Tale azione deve essere cumulata con l'azione del vento in direzione perpendicolare all'asse del binario, tenendo conto che il D.M.2008 al paragrafo 5.2.3.3.2 afferma che in ogni caso l'azione risultante dalla somma dell'azione del vento con le azioni aerodinamiche deve essere maggiore di un valore minimo, funzione della velocità della linea e comunque di 1,5 kN/m^2 sia nelle verifiche agli SLE (combinazione caratteristica), che nella verifica agli SLU con γ_Q=1.00 e γ_{Qi}=1.00.

Secondo il documento RFI DTC INC PO SP IFS 001 A, il valore minimo della combinazione del vento e dell'azione aerodinamica si assume pari a 1.50 kN/m^2 per linee percorse a velocità V≤200 km/h.

Pertanto si calcola:

- Pressione verticale totale sulla struttura:

$$q_{tot.v} = p + q_{a,v} = 0.77\frac{kN}{m^2} + 0.40\ \ kN/m^2 = 1.17\ \ kN/m^2 < 1.5\ kN/m^2$$

Tale valore risulta minore di 1.5 kN/m^2, per cui la pressione del vento viene ricalcolata come segue:

p_v = 1.50 - 0.40 = 1.10 kN/m^2.

- Pressione orizzontale totale sulla struttura:

$$q_{tot.h} = p + q_{a,h} = 0.77\ kN/m^2 + 0.88\ kN/m^2 = 1.65\ kN/m^2 \geq 1.5\ kN/m^2$$

La pressione del vento viene quindi calcolata nel modo seguente:

p_v=1.10 kN/m^2 · 1.60m = 1.76kN/m sulle travi principali;

p_v=1.10 kN/m^2 · 3.00m = 3.30kN/m sui montanti;

p_h=0.77 kN/m^2 · 3.00m = 2.31kN/m sui traversi.

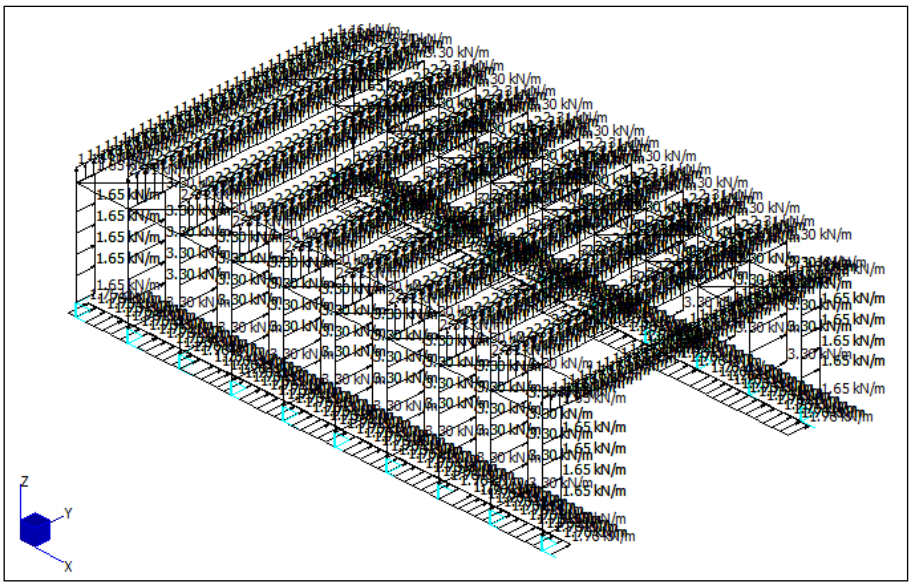

Figura 9-19: *Q02a – Carico Vento Y+.*

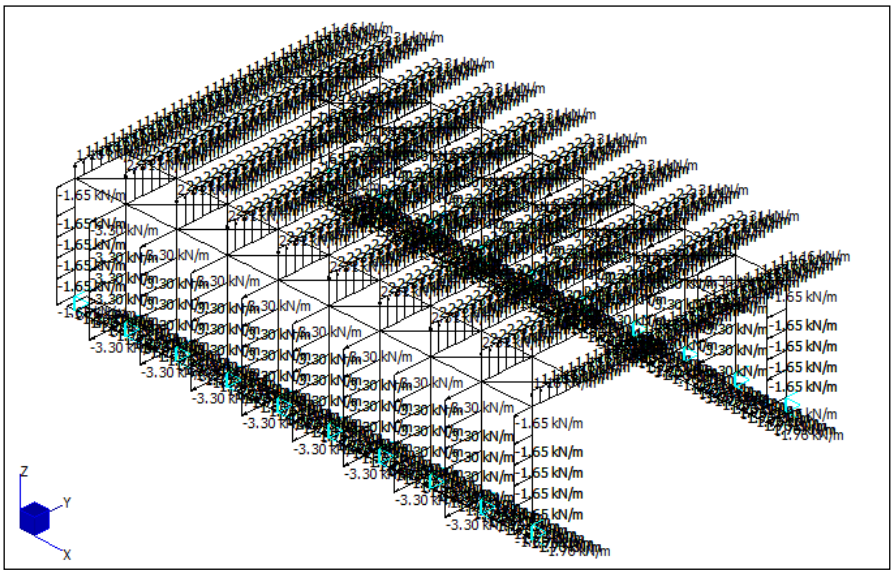

Figura 9-20: *Q02b – Carico Vento Y-.*

Gli effetti aerodinamici associati al passaggio dei convogli vengono quindi calcolati nel modo seguente:

$q_{a,v}$ =0.40 kN/m^2 · 3.00m = 1.20kN/m sui montanti;

$q_{a,h}$ =0.88 kN/m^2 · 3.00m = 2.64kN/m sui traversi.

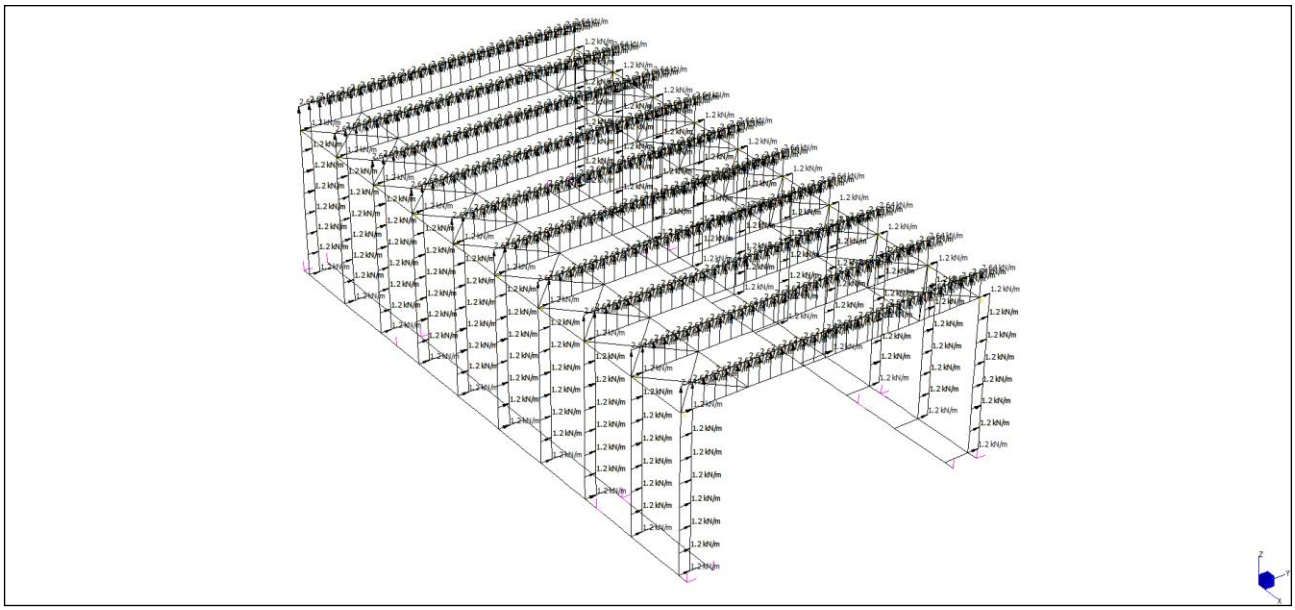

Figura 9-21: *Q32a – Effetti aerodinamici associati al passaggio dei convogli Y+.*

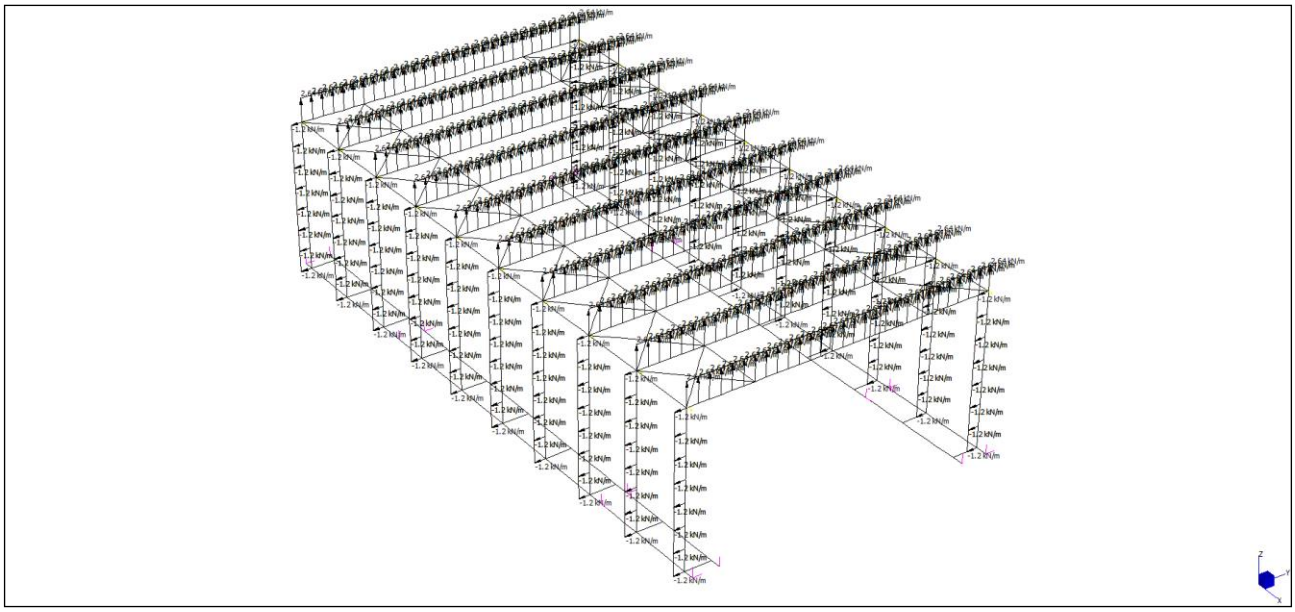

Figura 9-22: *Q32b – Effetti aerodinamici associati al passaggio dei convogli Y-.*

9.3.5 T00 e T01 – Azioni Termiche

Come prescritto al paragrafo 3.5.5 del [1], nel caso in cui la temperatura non costituisca azione fondamentale per la sicurezza o per la efficienza funzionale della struttura è consentito tener conto della sola componente ΔT_u , ricavandola direttamente dalla Tab. 3.5.II.

Tipo di struttura	ΔT_u
Strutture in c.a. e c.a.p. esposte	± 15 °C
Strutture in c.a. e c.a.p. protette	± 10 °C
Strutture in acciaio esposte	± 25 °C
Strutture in acciaio protette	± 15 °C

Tabella 7: Valori di ΔT_u.

Nel caso in esame si assume ΔT_u = ±25 °C.

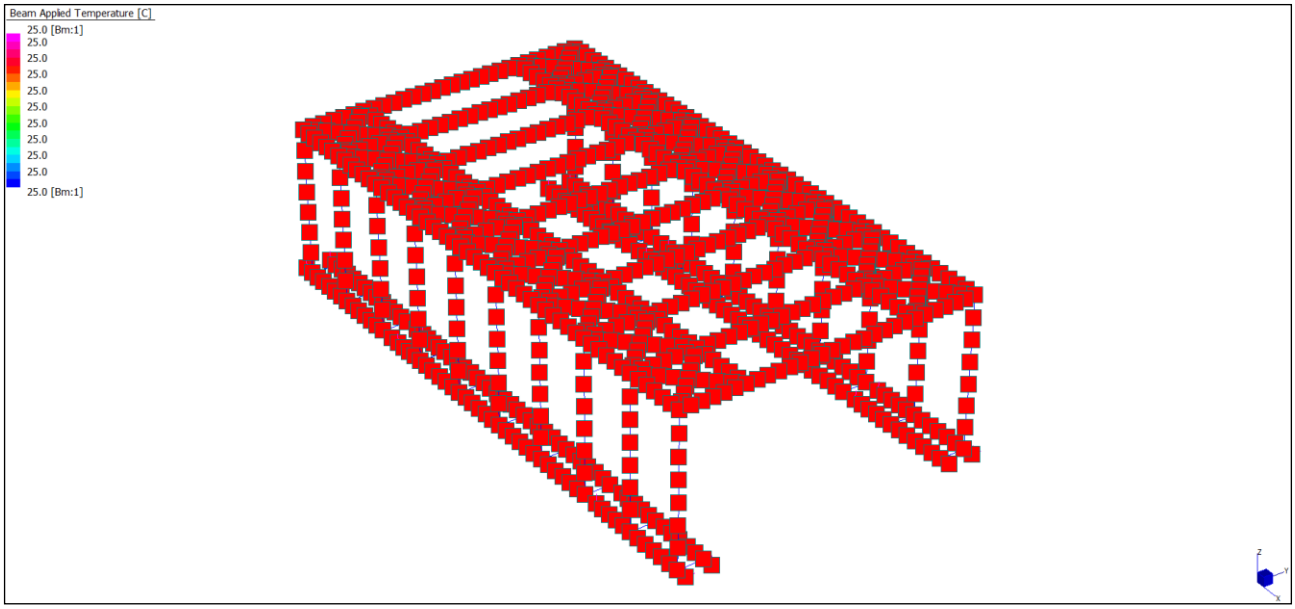

Figura 9-23: T00 – *Azione Termica – ΔT_u = +25°C*

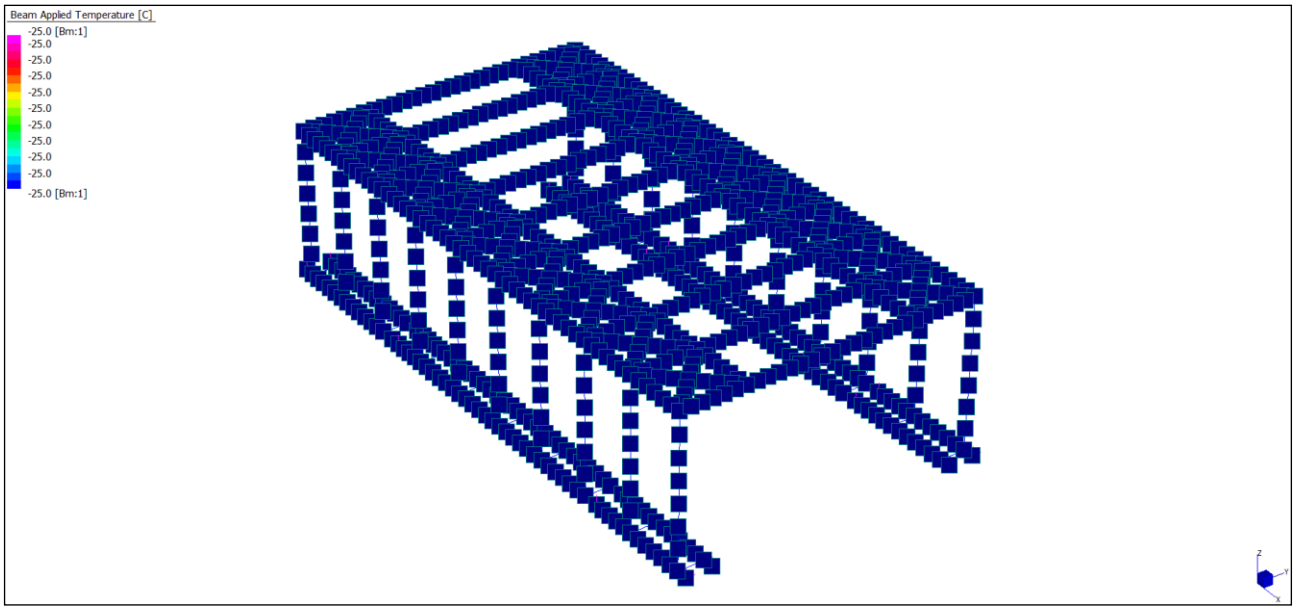

Figura 9-24: T00 – *Azione Termica* – $\Delta T_u = +25°C$

9.3.6 Combinazioni Di Carico

Ai fini della determinazione delle sollecitazioni di verifica, le azioni nominali, descritte al precedente paragrafo, vanno combinate nei vari Stati Limite di verifica previsti (SLE, SLU, SIS) in accordo a quanto previsto al punto 2.5.3 delle NTC08:

– Combinazione fondamentale, generalmente impiegata per gli stati limite ultimi (SLU):

$$\gamma_{G1}\cdot G_1 + \gamma_{G2}\cdot G_2 + \gamma_P\cdot P + \gamma_{Q1}\cdot Q_{k1} + \gamma_{Q2}\cdot \psi_{02}\cdot Q_{k2} + \gamma_{Q3}\cdot \psi_{03}\cdot Q_{k3} + \ldots \qquad (2.5.1)$$

– Combinazione caratteristica (rara), generalmente impiegata per gli stati limite di esercizio (SLE) irreversibili, da utilizzarsi nelle verifiche alle tensioni ammissibili di cui al § 2.7:

$$G_1 + G_2 + P + Q_{k1} + \psi_{02}\cdot Q_{k2} + \psi_{03}\cdot Q_{k3} + \ldots \qquad (2.5.2)$$

– Combinazione sismica, impiegata per gli stati limite ultimi e di esercizio connessi all'azione sismica E (v. § 3.2):

$$E + G_1 + G_2 + P + \psi_{21}\cdot Q_{k1} + \psi_{22}\cdot Q_{k2} + \ldots \qquad (2.5.5)$$

Le combinazioni sono state generate nel rispetto di quanto indicato dalla normativa nelle tabelle qui di seguito riportate:

		Coefficiente	EQU[1]	A1 STR	A2 GEO	Combinazione eccezionale	Combinazione Sismica
Carichi permanenti	favorevoli	γ_{G1}	0,90	1,00	1,00	1,00	1,00
	sfavorevoli		1,10	1,35	1,00	1,00	1,00
Carichi permanenti non strutturali[2]	favorevoli	γ_{G2}	0,00	0,00	0,00	1,00	1,00
	sfavorevoli		1,50	1,50	1,30	1,00	1,00
Ballast[3]	favorevoli	γ_B	0,90	1,00	1,00	1,00	1,00
	sfavorevoli		1,50	1,50	1,30	1,00	1,00
Carichi variabili da traffico[4]	favorevoli	γ_Q	0,00	0,00	0,00	0,00	0,00
	sfavorevoli		1,45	1,45	1,25	0,20[5]	0,20[5]
Carichi variabili	favorevoli	γ_{Qi}	0,00	0,00	0,00	0,00	0,00
	sfavorevoli		1,50	1,50	1,30	1,00	0,00
Precompressione	favorevole	γ_P	0,90	1,00	1,00	1,00	1,00
	sfavorevole		1,00[6]	1,00[7]	1,00	1,00	1,00

(1) Equilibrio che non coinvolga i parametri di deformabilità e resistenza del terreno; altrimenti si applicano i valori di GEO.
(2) Nel caso in cui i carichi permanenti non strutturali (ad es. carichi permanenti portati) siano compiutamente definiti si potranno adottare gli stessi coefficienti validi per le azioni permanenti.
(3) Quando si prevedano variazioni significative del carico dovuto al ballast, se ne dovrà tener conto esplicitamente nelle verifiche.
(4) Le componenti delle azioni da traffico sono introdotte in combinazione considerando uno dei gruppi di carico gr della Tab. 5.2.IV.
(5) Aliquota di carico da traffico da considerare.
(6) 1,30 per instabilità in strutture con precompressione esterna
(7) 1,20 per effetti locali

Figura 9-25: *Tabella 5.2.V – Coefficienti parziali di sicurezza per le combinazioni di carico agli SLU, eccezionali e sismica.*

Nella Tab. 5.2.V il significato dei simboli è il seguente:

γ_{G1} coefficiente parziale del peso proprio della struttura, del terreno e dell'acqua, quando pertinente;

γ_{G2} coefficiente parziale dei pesi propri degli elementi non strutturali;

γ_{B} coefficiente parziale del peso proprio del ballast;

γ_{Q} coefficiente parziale delle azioni variabili da traffico;

γ_{Qi} coefficiente parziale delle azioni variabili.

Per le verifiche agli stati limite d'esercizio si adottano i valori dei coefficienti parziali in Tab. 5.2.VI.

Azioni		ψ_0	ψ_1	ψ_2
Azioni singole da traffico	Carico sul rilevato a tergo delle spalle	0,80	0,50	0,0
	Azioni aerodinamiche generate dal transito dei convogli	0,80	0,50	0,0
Gruppi di carico	gr_1	0,80(2)	0,80(1)	0,0
	gr_2	0,80(2)	0,80(1)	-
	gr_3	0,80(2)	0,80(1)	0,0
	gr_4	1,00	1,00(1)	0,0
Azioni del vento	F_{Wk}	0,60	0,50	0,0
Azioni da neve	in fase di esecuzione	0,80	0,0	0,0
	SLU e SLE	0,0	0,0	0,0
Azioni termiche	T_k	0,60	0,60	0,50

Figura 9-26: *Tabella 5.2.VI – Coefficienti di combinazoine ψ delle azioni.*

Per la valutazione degli effetti dell'interazione si usano gli stessi coefficienti ψ adottati per le azioni che provocano dette interazioni e cioè: temperatura, carichi verticali da traffico ferroviario, frenatura.

Le combinazioni di carico SLU statiche (in assenza di azioni sismiche) sono ottenute mediante diverse combinazioni dei carichi permanenti ed accidentali in modo da considerare tutte le situazioni più sfavorevoli agenti sulla struttura. I carichi vengono applicati mediante opportuni coefficienti parziali di sicurezza, considerando l'eventualità più gravosa per la struttura.

Le azioni sismiche sono valutate in conformità a quanto stabilito dalle norme e specificato nel paragrafo sulle azioni. Vengono in particolare controllate le deformazioni allo stato limite ultimo ed allo stato limite di danno. In sede di dimensionamento sono state analizzate tutte le combinazioni, anche sismiche, impostate ai finidella verifica SLU Sono state altresì processate le specifiche combinazioni di carico introdotte per valutare lo stato limite di esercizio (tensioni, fessurazione, deformabilità).

Si riportano nelle tabelle seguenti le condizioni di carico elementari considerate e le combinazioni di carico.

Azione di carico	Descrzione
G00 – Peso Proprio	Peso proprio degli elementi strutturali
G01 – Carico Permanente Passerella	Peso permanente della passerella in ca
G02a – Carico Panelli Fonoassorbenti	Peso permanente non compiutamente definito dei pannelli fonoassorbenti
G02b – Carico Panelli Fonoassorbenti	Peso permanente non compiutamente definito dei pannelli fonoassorbenti installati solo su trave principale di destra
Q00 – Sovraccarico Accidentale	Carico accidentale applicato alla passerella
Q01 – Carico Neve	Carico neve applicato alla struttura
Q02a – Carico Vento Y+	Carico vento in direzione Y+ positiva
Q02b – Carico Vento Y-	Carico vento in direzione Y- negativa
Q03a – Effetti Aerodinamici Convogli Y+	Azione aerodinamica in direzione Y+ positiva
Q03b – Effetti Aerodinamici Convogli Y-	Azione aerodinamica in direzione Y- negativa
T00 – ΔT_u = +25°C	Azione termica (Riscaldamento)
T01 – ΔT_u = -25°C	Azione termica (Raffreddamento)

Si riportano nella pagine seguenti le combinazioni di carico utilizzate per il calcolo delle sollecitazioni.

CASES	SLU_000	SLU_001	SLU_01	SLU_02	SLU_03	SLU_04	SLU_05	SLU_06	SLU_07	SLU_08	SLU_09	SLU_10	SLU_11	SLU_12	SLU_13	SLU_14	SLU_15	SLU_16	SLU_17	SLU_18	SLU_19	SLU_20
1: G00 - Peso Proprio	1.35	1.35	1.35	1.35	1.35	1.35	1.35	1.35	1.35	1.35	1.35	1.35	1.35	1.35	1.35	1.35	1.35	1.35	1.35	1.35	1.35	1.35
2: G01 - Carico Permanente Sbalzo	1.35	1.35	1.35	1.35	1.35	1.35	1.35	1.35	1.35	1.35	1.35	1.35	1.35	1.35	1.35	1.35	1.35	1.35	1.35	1.35	1.35	1.35
3: G02a - Carico Pannelli Fonoassorbenti	1.5		1.5		1.5		1.5		1.5		1.5		1.5		1.5		1.5		1.5		1.5	
4: G02b - Carico Pannelli Fonoassorbenti DX		1.5		1.5		1.5		1.5		1.5		1.5		1.5		1.5		1.5		1.5		1.5
5: Q00 - Sovraccarico Accidentale			1.5	1.5															1.5	1.5	1.5	1.5
6: Q01 - Carico Neve					1.5	1.5																
7: Q02a - Carico Vento Y+							1.5	1.5											0.9	0.9		
8: Q02b - Carico Vento Y-									1.5	1.5											0.9	0.9
9: Q03a - Effetti Aerodinamici Convogli Y+											1.45	1.45										
10: Q03b - Effetti Aerodinamici Convogli Y-													1.45	1.45								
11: T00 - DTu = +25°C															1.5	1.5						
12: T01 - DTu = -25°C																	1.5	1.5				

CASES	SLU_21	SLU_22	SLU_23	SLU_24	SLU_25	SLU_26	SLU_27	SLU_28	SLU_29	SLU_30	SLU_31	SLU_32	SLU_33	SLU_34	SLU_35	SLU_36	SLU_37	SLU_38	SLU_39	SLU_40
1: G00 - Peso Proprio	1.35	1.35	1.35	1.35	1.35	1.35	1.35	1.35	1.35	1.35	1.35	1.35	1.35	1.35	1.35	1.35	1.35	1.35	1.35	1.35
2: G01 - Carico Permanente Sbalzo	1.35	1.35	1.35	1.35	1.35	1.35	1.35	1.35	1.35	1.35	1.35	1.35	1.35	1.35	1.35	1.35	1.35	1.35	1.35	1.35
3: G02a - Carico Pannelli Fonoassorbenti	1.5		1.5		1.5		1.5		1.5		1.5		1.5		1.5		1.5		1.5	
4: G02b - Carico Pannelli Fonoassorbenti DX		1.5		1.5		1.5		1.5		1.5		1.5		1.5		1.5		1.5		1.5
5: Q00 - Sovraccarico Accidentale	1.5	1.5	1.5	1.5	1.5	1.5	1.5	1.5												
6: Q01 - Carico Neve									1.5	1.5	1.5	1.5	1.5	1.5	1.5	1.5	1.5	1.5	1.5	1.5
7: Q02a - Carico Vento Y+					0.9	0.9			0.9	0.9										
8: Q02b - Carico Vento Y-							0.9	0.9			0.9	0.9								
9: Q03a - Effetti Aerodinamici Convogli Y+													1.16	1.16						
10: Q03b - Effetti Aerodinamici Convogli Y-															1.16	1.16				
11: T00 - DTu = +25°C	0.9	0.9			0.9	0.9											0.9	0.9		
12: T01 - DTu = -25°C			0.9	0.9			0.9	0.9											0.9	0.9

CASES	SLU_41	SLU_42	SLU_43	SLU_44	SLU_45	SLU_46	SLU_47	SLU_48	SLU_49	SLU_50	SLU_51	SLU_52	SLU_53	SLU_54	SLU_55	SLU_56	SLU_57	SLU_58	SLU_59	SLU_60
1: G00 - Peso Proprio	1.35	1.35	1.35	1.35	1.35	1.35	1.35	1.35	1.35	1.35	1.35	1.35	1.35	1.35	1.35	1.35	1.35	1.35	1.35	1.35
2: G01 - Carico Permanente Sbalzo	1.35	1.35	1.35	1.35	1.35	1.35	1.35	1.35	1.35	1.35	1.35	1.35	1.35	1.35	1.35	1.35	1.35	1.35	1.35	1.35
3: G02a - Carico Pannelli Fonoassorbenti	1.5		1.5		1.5		1.5		1.5		1.5		1.5		1.5		1.5		1.5	
4: G02b - Carico Pannelli Fonoassorbenti DX		1.5		1.5		1.5		1.5		1.5		1.5		1.5		1.5		1.5		1.5
5: Q00 - Sovraccarico Accidentale																				
6: Q01 - Carico Neve	1.5	1.5	1.5	1.5	1.5	1.5	1.5	1.5	1.5	1.5	1.5	1.5	1.5	1.5	1.5	1.5	1.05	1.05	1.05	1.05
7: Q02a - Carico Vento Y+	0.9	0.9			0.9	0.9							0.9	0.9			1.5	1.5		
8: Q02b - Carico Vento Y-			0.9	0.9			0.9	0.9							0.9	0.9			1.5	1.5
9: Q03a - Effetti Aerodinamici Convogli Y+	1.16	1.16							1.16	1.16			1.16	1.16						
10: Q03b - Effetti Aerodinamici Convogli Y-			1.16	1.16							1.16	1.16			1.16	1.16				
11: T00 - DTu = +25°C					0.9	0.9			0.9	0.9			0.9	0.9						
12: T01 - DTu = -25°C							0.9	0.9			0.9	0.9			0.9	0.9				

CASES	SLU_61	SLU_62	SLU_63	SLU_64	SLU_65	SLU_66	SLU_67	SLU_68	SLU_69	SLU_70	SLU_71	SLU_72	SLU_73	SLU_74	SLU_75	SLU_76	SLU_77	SLU_78	SLU_79	SLU_80
1: G00 - Peso Proprio	1.35	1.35	1.35	1.35	1.35	1.35	1.35	1.35	1.35	1.35	1.35	1.35	1.35	1.35	1.35	1.35	1.35	1.35	1.35	1.35
2: G01 - Carico Permanente Sbalzo	1.35	1.35	1.35	1.35	1.35	1.35	1.35	1.35	1.35	1.35	1.35	1.35	1.35	1.35	1.35	1.35	1.35	1.35	1.35	1.35
3: G02a - Carico Pannelli Fonoassorbenti	1.5		1.5		1.5		1.5		1.5		1.5		1.5		1.5		1.5		1.5	
4: G02b - Carico Pannelli Fonoassorbenti DX		1.5		1.5		1.5		1.5		1.5		1.5		1.5		1.5		1.5		1.5
5: Q00 - Sovraccarico Accidentale																				
6: Q01 - Carico Neve																	1.05	1.05	1.05	1.05
7: Q02a - Carico Vento Y+	1.5	1.5			1.5	1.5			1.5	1.5			1.5	1.5			1.5	1.5		
8: Q02b - Carico Vento Y-			1.5	1.5			1.5	1.5			1.5	1.5			1.5	1.5			1.5	1.5
9: Q03a - Effetti Aerodinamici Convogli Y+	1.16	1.16	1.16	1.16													1.16	1.16	1.16	1.16
10: Q03b - Effetti Aerodinamici Convogli Y-					1.16	1.16	1.16	1.16												
11: T00 - DTu = +25°C									0.9	0.9	0.9	0.9								
12: T01 - DTu = -25°C													0.9	0.9	0.9	0.9				

CASES	SLU_81	SLU_82	SLU_83	SLU_84	SLU_85	SLU_86	SLU_87	SLU_88	SLU_89	SLU_90	SLU_91	SLU_92	SLU_93	SLU_94	SLU_95	SLU_96	SLU_97	SLU_98	SLU_99	SLU_100
1: G00 - Peso Proprio	1.35	1.35	1.35	1.35	1.35	1.35	1.35	1.35	1.35	1.35	1.35	1.35	1.35	1.35	1.35	1.35	1.35	1.35	1.35	1.35
2: G01 - Carico Permanente Sbalzo	1.35	1.35	1.35	1.35	1.35	1.35	1.35	1.35	1.35	1.35	1.35	1.35	1.35	1.35	1.35	1.35	1.35	1.35	1.35	1.35
3: G02a - Carico Pannelli Fonoassorbenti	1.5		1.5		1.5		1.5		1.5		1.5		1.5		1.5		1.5		1.5	
4: G02b - Carico Pannelli Fonoassorbenti DX		1.5		1.5		1.5		1.5		1.5		1.5		1.5		1.5		1.5		1.5
5: Q00 - Sovraccarico Accidentale																				
6: Q01 - Carico Neve	1.05	1.05	1.05	1.05	1.05	1.05	1.05	1.05	1.05	1.05	1.05	1.05								
7: Q02a - Carico Vento Y+	1.5	1.5			1.5	1.5			1.5	1.5			1.5	1.5			1.5	1.5		
8: Q02b - Carico Vento Y-			1.5	1.5			1.5	1.5			1.5	1.5			1.5	1.5			1.5	1.5
9: Q03a - Effetti Aerodinamici Convogli Y+													1.16	1.16	1.16	1.16	1.16	1.16	1.16	1.16
10: Q03b - Effetti Aerodinamici Convogli Y-	1.16	1.16	1.16	1.16																
11: T00 - DTu = +25°C					0.9	0.9	0.9	0.9					0.9	0.9	0.9	0.9				
12: T01 - DTu = -25°C									0.9	0.9	0.9	0.9					0.9	0.9	0.9	0.9

CASES	SLU_101	SLU_102	SLU_103	SLU_104	SLU_105	SLU_106	SLU_107	SLU_108	SLU_109	SLU_110	SLU_111	SLU_112	SLU_113	SLU_114	SLU_115	SLU_116	SLU_117	SLU_118	SLU_119	SLU_120
1: G00 - Peso Proprio	1.35	1.35	1.35	1.35	1.35	1.35	1.35	1.35	1.35	1.35	1.35	1.35	1.35	1.35	1.35	1.35	1.35	1.35	1.35	1.35
2: G01 - Carico Permanente Sbalzo	1.35	1.35	1.35	1.35	1.35	1.35	1.35	1.35	1.35	1.35	1.35	1.35	1.35	1.35	1.35	1.35	1.35	1.35	1.35	1.35
3: G02a - Carico Pannelli Fonoassorbenti	1.5		1.5		1.5		1.5		1.5		1.5		1.5		1.5		1.5		1.5	
4: G02b - Carico Pannelli Fonoassorbenti DX		1.5		1.5		1.5		1.5		1.5		1.5		1.5		1.5		1.5		1.5
5: Q00 - Sovraccarico Accidentale																				
6: Q01 - Carico Neve									1.05	1.05	1.05	1.05	1.05	1.05	1.05	1.05	1.05	1.05	1.05	1.05
7: Q02a - Carico Vento Y+	1.5	1.5			1.5	1.5			1.5	1.5			1.5	1.5			1.5	1.5		
8: Q02b - Carico Vento Y-			1.5	1.5			1.5	1.5			1.5	1.5			1.5	1.5			1.5	1.5
9: Q03a - Effetti Aerodinamici Convogli Y+									1.16	1.16	1.16	1.16	1.16	1.16	1.16	1.16				
10: Q03b - Effetti Aerodinamici Convogli Y-	1.16	1.16	1.16	1.16	1.16	1.16	1.16	1.16									1.16	1.16	1.16	1.16
11: T00 - DTu = +25°C	0.9	0.9	0.9	0.9					0.9	0.9	0.9	0.9					0.9	0.9	0.9	0.9
12: T01 - DTu = -25°C					0.9	0.9	0.9	0.9					0.9	0.9	0.9	0.9				

CASES	SLU_121	SLU_122	SLU_123	SLU_124	SLU_125	SLU_126	SLU_127	SLU_128	SLU_129	SLU_130	SLU_131	SLU_132	SLU_133	SLU_134	SLU_135	SLU_136	SLU_137	SLU_138	SLU_139	SLU_140
1: G00 - Peso Proprio	1.35	1.35	1.35	1.35	1.35	1.35	1.35	1.35	1.35	1.35	1.35	1.35	1.35	1.35	1.35	1.35	1.35	1.35	1.35	1.35
2: G01 - Carico Permanente Sbalzo	1.35	1.35	1.35	1.35	1.35	1.35	1.35	1.35	1.35	1.35	1.35	1.35	1.35	1.35	1.35	1.35	1.35	1.35	1.35	1.35
3: G02a - Carico Pannelli Fonoassorbenti	1.5		1.5		1.5		1.5		1.5		1.5		1.5		1.5		1.5		1.5	
4: G02b - Carico Pannelli Fonoassorbenti DX		1.5		1.5		1.5		1.5		1.5		1.5		1.5		1.5		1.5		1.5
5: Q00 - Sovraccarico Accidentale																				
6: Q01 - Carico Neve	1.05	1.05	1.05	1.05	1.05	1.05	1.05	1.05												
7: Q02a - Carico Vento Y+	1.5	1.5							0.9	0.9			0.9	0.9						
8: Q02b - Carico Vento Y-			1.5	1.5							0.9	0.9			0.9	0.9				
9: Q03a - Effetti Aerodinamici Convogli Y+					1.45	1.45			1.45	1.45	1.45	1.45					1.45	1.45	1.45	1.45
10: Q03b - Effetti Aerodinamici Convogli Y-	1.16	1.16	1.16	1.16			1.45	1.45					1.45	1.45	1.45	1.45				
11: T00 - DTu = +25°C																	0.9	0.9	0.9	0.9
12: T01 - DTu = -25°C	0.9	0.9	0.9	0.9																

CASES	SLU_141	SLU_142	SLU_143	SLU_144	SLU_145	SLU_146	SLU_147	SLU_148	SLU_149	SLU_150	SLU_151	SLU_152	SLU_153	SLU_154	SLU_155	SLU_156	SLU_157	SLU_158	SLU_159	SLU_160
1: G00 - Peso Proprio	1.35	1.35	1.35	1.35	1.35	1.35	1.35	1.35	1.35	1.35	1.35	1.35	1.35	1.35	1.35	1.35	1.35	1.35	1.35	1.35
2: G01 - Carico Permanente Sbalzo	1.35	1.35	1.35	1.35	1.35	1.35	1.35	1.35	1.35	1.35	1.35	1.35	1.35	1.35	1.35	1.35	1.35	1.35	1.35	1.35
3: G02a - Carico Pannelli Fonoassorbenti	1.5		1.5		1.5		1.5		1.5		1.5		1.5		1.5		1.5		1.5	
4: G02b - Carico Pannelli Fonoassorbenti DX		1.5		1.5		1.5		1.5		1.5		1.5		1.5		1.5		1.5		1.5
5: Q00 - Sovraccarico Accidentale																				
6: Q01 - Carico Neve					1.05	1.05	1.05	1.05	1.05	1.05	1.05	1.05	1.05	1.05	1.05	1.05	1.05	1.05	1.05	1.05
7: Q02a - Carico Vento Y+					0.9	0.9			0.9	0.9										
8: Q02b - Carico Vento Y-							0.9	0.9			0.9	0.9								
9: Q03a - Effetti Aerodinamici Convogli Y+					1.45	1.45	1.45	1.45					1.45	1.45	1.45	1.45				
10: Q03b - Effetti Aerodinamici Convogli Y-	1.45	1.45	1.45	1.45					1.45	1.45	1.45	1.45					1.45	1.45	1.45	1.45
11: T00 - DTu = +25°C													0.9	0.9	0.9	0.9				
12: T01 - DTu = -25°C	0.9	0.9	0.9	0.9													0.9	0.9	0.9	0.9

CASES	SLU_161	SLU_162	SLU_163	SLU_164	SLU_165	SLU_166	SLU_167	SLU_168	SLU_169	SLU_170	SLU_171	SLU_172	SLU_173	SLU_174	SLU_175	SLU_176	SLU_177	SLU_178	SLU_179	SLU_180
1: G00 - Peso Proprio	1.35	1.35	1.35	1.35	1.35	1.35	1.35	1.35	1.35	1.35	1.35	1.35	1.35	1.35	1.35	1.35	1.35	1.35	1.35	1.35
2: G01 - Carico Permanente Sbalzo	1.35	1.35	1.35	1.35	1.35	1.35	1.35	1.35	1.35	1.35	1.35	1.35	1.35	1.35	1.35	1.35	1.35	1.35	1.35	1.35
3: G02a - Carico Pannelli Fonoassorbenti	1.5		1.5		1.5		1.5		1.5		1.5		1.5		1.5		1.5		1.5	
4: G02b - Carico Pannelli Fonoassorbenti DX		1.5		1.5		1.5		1.5		1.5		1.5		1.5		1.5		1.5		1.5
5: Q00 - Sovraccarico Accidentale																				
6: Q01 - Carico Neve																	1.05	1.05	1.05	1.05
7: Q02a - Carico Vento Y+	0.9	0.9			0.9	0.9			0.9	0.9			0.9	0.9			0.9	0.9		
8: Q02b - Carico Vento Y-			0.9	0.9			0.9	0.9			0.9	0.9			0.9	0.9			0.9	0.9
9: Q03a - Effetti Aerodinamici Convogli Y+	1.45	1.45	1.45	1.45	1.45	1.45	1.45	1.45									1.45	1.45	1.45	1.45
10: Q03b - Effetti Aerodinamici Convogli Y-									1.45	1.45	1.45	1.45	1.45	1.45	1.45	1.45				
11: T00 - DTu = +25°C	0.9	0.9	0.9	0.9					0.9	0.9	0.9	0.9					0.9	0.9	0.9	0.9
12: T01 - DTu = -25°C					0.9	0.9	0.9	0.9					0.9	0.9	0.9	0.9				

CASES	SLU_181	SLU_182	SLU_183	SLU_184	SLU_185	SLU_186	SLU_187	SLU_188	SLU_189	SLU_190	SLU_191	SLU_192	SLU_193	SLU_194	SLU_195	SLU_196	SLU_197	SLU_198	SLU_199	SLU_200
1: G00 - Peso Proprio	1.35	1.35	1.35	1.35	1.35	1.35	1.35	1.35	1.35	1.35	1.35	1.35	1.35	1.35	1.35	1.35	1.35	1.35	1.35	1.35
2: G01 - Carico Permanente Sbalzo	1.35	1.35	1.35	1.35	1.35	1.35	1.35	1.35	1.35	1.35	1.35	1.35	1.35	1.35	1.35	1.35	1.35	1.35	1.35	1.35
3: G02a - Carico Pannelli Fonoassorbenti	1.5		1.5		1.5		1.5		1.5		1.5		1.5		1.5		1.5		1.5	
4: G02b - Carico Pannelli Fonoassorbenti DX		1.5		1.5		1.5		1.5		1.5		1.5		1.5		1.5		1.5		1.5
5: Q00 - Sovraccarico Accidentale																				
6: Q01 - Carico Neve	1.05	1.05	1.05	1.05	1.05	1.05	1.05	1.05	1.05	1.05	1.05	1.05	1.05	1.05	1.05	1.05				
7: Q02a - Carico Vento Y+	0.9	0.9			0.9	0.9			0.9	0.9							0.9	0.9		
8: Q02b - Carico Vento Y-			0.9	0.9			0.9	0.9			0.9	0.9							0.9	0.9
9: Q03a - Effetti Aerodinamici Convogli Y+	1.45	1.45	1.45	1.45																
10: Q03b - Effetti Aerodinamici Convogli Y-					1.45	1.45	1.45	1.45	1.45	1.45	1.45	1.45								
11: T00 - DTu = +25°C					0.9	0.9	0.9	0.9					1.5	1.5			1.5	1.5	1.5	1.5
12: T01 - DTu = -25°C	0.9	0.9	0.9	0.9					0.9	0.9	0.9	0.9			1.5	1.5				

CASES	SLU_201	SLU_202	SLU_203	SLU_204	SLU_205	SLU_206	SLU_207	SLU_208	SLU_209	SLU_210	SLU_211	SLU_212	SLU_213	SLU_214	SLU_215	SLU_216	SLU_217	SLU_218	SLU_219	SLU_220
1: G00 - Peso Proprio	1.35	1.35	1.35	1.35	1.35	1.35	1.35	1.35	1.35	1.35	1.35	1.35	1.35	1.35	1.35	1.35	1.35	1.35	1.35	1.35
2: G01 - Carico Permanente Sbalzo	1.35	1.35	1.35	1.35	1.35	1.35	1.35	1.35	1.35	1.35	1.35	1.35	1.35	1.35	1.35	1.35	1.35	1.35	1.35	1.35
3: G02a - Carico Pannelli Fonoassorbenti	1.5		1.5		1.5		1.5		1.5		1.5		1.5		1.5		1.5		1.5	
4: G02b - Carico Pannelli Fonoassorbenti DX		1.5		1.5		1.5		1.5		1.5		1.5		1.5		1.5		1.5		1.5
5: Q00 - Sovraccarico Accidentale																				
6: Q01 - Carico Neve													1.05	1.05	1.05	1.05	1.05	1.05	1.05	1.05
7: Q02a - Carico Vento Y+	0.9	0.9											0.9	0.9			0.9	0.9		
8: Q02b - Carico Vento Y-			0.9	0.9											0.9	0.9			0.9	0.9
9: Q03a - Effetti Aerodinamici Convogli Y+					1.16	1.16	1.16	1.16												
10: Q03b - Effetti Aerodinamici Convogli Y-									1.16	1.16	1.16	1.16								
11: T00 - DTu = +25°C					1.5	1.5	1.5	1.5					1.5	1.5	1.5	1.5				
12: T01 - DTu = -25°C	1.5	1.5	1.5	1.5					1.5	1.5	1.5	1.5					1.5	1.5	1.5	1.5

CASES	SLU_221	SLU_222	SLU_223	SLU_224	SLU_225	SLU_226	SLU_227	SLU_228	SLU_229	SLU_230	SLU_231	SLU_232	SLU_233	SLU_234	SLU_235	SLU_236	SLU_237	SLU_238	SLU_239	SLU_240
1: G00 - Peso Proprio	1.35	1.35	1.35	1.35	1.35	1.35	1.35	1.35	1.35	1.35	1.35	1.35	1.35	1.35	1.35	1.35	1.35	1.35	1.35	1.35
2: G01 - Carico Permanente Sbalzo	1.35	1.35	1.35	1.35	1.35	1.35	1.35	1.35	1.35	1.35	1.35	1.35	1.35	1.35	1.35	1.35	1.35	1.35	1.35	1.35
3: G02a - Carico Pannelli Fonoassorbenti	1.5		1.5		1.5		1.5		1.5		1.5		1.5		1.5		1.5		1.5	
4: G02b - Carico Pannelli Fonoassorbenti DX		1.5		1.5		1.5		1.5		1.5		1.5		1.5		1.5		1.5		1.5
5: Q00 - Sovraccarico Accidentale																				
6: Q01 - Carico Neve	1.05	1.05	1.05	1.05	1.05	1.05	1.05	1.05												
7: Q02a - Carico Vento Y+									0.9	0.9			0.9	0.9			0.9	0.9		
8: Q02b - Carico Vento Y-											0.9	0.9			0.9	0.9			0.9	0.9
9: Q03a - Effetti Aerodinamici Convogli Y+	1.16	1.16	1.16	1.16					1.16	1.16	1.16	1.16	1.16	1.16	1.16	1.16				
10: Q03b - Effetti Aerodinamici Convogli Y-					1.16	1.16	1.16	1.16									1.16	1.16	1.16	1.16
11: T00 - DTu = +25°C	1.5	1.5	1.5	1.5					1.5	1.5	1.5	1.5					1.5	1.5	1.5	1.5
12: T01 - DTu = -25°C					1.5	1.5	1.5	1.5					1.5	1.5	1.5	1.5				

CASES	SLU_241	SLU_242	SLU_243	SLU_244	SLU_245	SLU_246	SLU_247	SLU_248	SLU_249	SLU_250	SLU_251	SLU_252	SLU_253	SLU_254	SLU_255	SLU_256	SLU_257	SLU_258	SLU_259	SLU_260
1: G00 - Peso Proprio	1.35	1.35	1.35	1.35	1.35	1.35	1.35	1.35	1.35	1.35	1.35	1.35	1.35	1.35	1.35	1.35	1.35	1.35	1.35	1.35
2: G01 - Carico Permanente Sbalzo	1.35	1.35	1.35	1.35	1.35	1.35	1.35	1.35	1.35	1.35	1.35	1.35	1.35	1.35	1.35	1.35	1.35	1.35	1.35	1.35
3: G02a - Carico Pannelli Fonoassorbenti	1.5		1.5		1.5		1.5		1.5		1.5		1.5		1.5		1.5		1.5	
4: G02b - Carico Pannelli Fonoassorbenti DX		1.5		1.5		1.5		1.5		1.5		1.5		1.5		1.5		1.5		1.5
5: Q00 - Sovraccarico Accidentale																				
6: Q01 - Carico Neve					1.05	1.05	1.05	1.05	1.05	1.05	1.05	1.05	1.05	1.05	1.05	1.05	1.05	1.05	1.05	1.05
7: Q02a - Carico Vento Y+	0.9	0.9			0.9	0.9			0.9	0.9			0.9	0.9			0.9	0.9		
8: Q02b - Carico Vento Y-			0.9	0.9			0.9	0.9			0.9	0.9			0.9	0.9			0.9	0.9
9: Q03a - Effetti Aerodinamici Convogli Y+					1.16	1.16	1.16	1.16	1.16	1.16	1.16	1.16								
10: Q03b - Effetti Aerodinamici Convogli Y-	1.16	1.16	1.16	1.16									1.16	1.16	1.16	1.16	1.16	1.16	1.16	1.16
11: T00 - DTu = +25°C					1.5	1.5	1.5	1.5					1.5	1.5	1.5	1.5				
12: T01 - DTu = -25°C	1.5	1.5	1.5	1.5					1.5	1.5	1.5	1.5					1.5	1.5	1.5	1.5

CASES	SLE_000	SLE_001	SLE_01	SLE_02	SLE_03	SLE_04	SLE_05	SLE_06	SLE_07	SLE_08	SLE_09	SLE_10	SLE_11	SLE_12	SLE_13	SLE_14	SLE_15	SLE_16	SLE_17	SLE_18	SLE_19	SLE_20
1: G00 - Peso Proprio	1	1	1	1	1	1	1	1	1	1	1	1	1	1	1	1	1	1	1	1	1	1
2: G01 - Carico Permanente Sbalzo	1	1	1	1	1	1	1	1	1	1	1	1	1	1	1	1	1	1	1	1	1	1
3: G02a - Carico Pannelli Fonoassorbenti	1		1		1		1		1		1		1		1		1		1		1	
4: G02b - Carico Pannelli Fonoassorbenti DX		1		1		1		1		1		1		1		1		1		1		1
5: Q00 - Sovraccarico Accidentale			1	1															1	1	1	1
6: Q01 - Carico Neve					1	1																
7: Q02a - Carico Vento Y+							1	1											0.6	0.6		
8: Q02b - Carico Vento Y-									1	1											0.6	0.6
9: Q03a - Effetti Aerodinamici Convogli Y+											1	1										
10: Q03b - Effetti Aerodinamici Convogli Y-													1	1								
11: T00 - DTu = +25°C															1	1						
12: T01 - DTu = -25°C																	1	1				

CASES	SLE_21	SLE_22	SLE_23	SLE_24	SLE_25	SLE_26	SLE_27	SLE_28	SLE_29	SLE_30	SLE_31	SLE_32	SLE_33	SLE_34	SLE_35	SLE_36	SLE_37	SLE_38	SLE_39	SLE_40
1: G00 - Peso Proprio	1	1	1	1	1	1	1	1	1	1	1	1	1	1	1	1	1	1	1	1
2: G01 - Carico Permanente Sbalzo	1	1	1	1	1	1	1	1	1	1	1	1	1	1	1	1	1	1	1	1
3: G02a - Carico Pannelli Fonoassorbenti	1		1		1		1		1		1		1		1		1		1	
4: G02b - Carico Pannelli Fonoassorbenti DX		1		1		1		1		1		1		1		1		1		1
5: Q00 - Sovraccarico Accidentale	1	1	1	1	1	1	1	1												
6: Q01 - Carico Neve									1	1	1	1	1	1	1	1	1	1	1	1
7: Q02a - Carico Vento Y+					0.6	0.6			0.6	0.6										
8: Q02b - Carico Vento Y-							0.6	0.6			0.6	0.6								
9: Q03a - Effetti Aerodinamici Convogli Y+													0.8	0.8						
10: Q03b - Effetti Aerodinamici Convogli Y-															0.8	0.8				
11: T00 - DTu = +25°C	0.6	0.6			0.6	0.6											0.6	0.6		
12: T01 - DTu = -25°C			0.6	0.6			0.6	0.6											0.6	0.6

CASES	SLE_41	SLE_42	SLE_43	SLE_44	SLE_45	SLE_46	SLE_47	SLE_48	SLE_49	SLE_50	SLE_51	SLE_52	SLE_53	SLE_54	SLE_55	SLE_56	SLE_57	SLE_58	SLE_59	SLE_60
1: G00 - Peso Proprio	1	1	1	1	1	1	1	1	1	1	1	1	1	1	1	1	1	1	1	1
2: G01 - Carico Permanente Sbalzo	1	1	1	1	1	1	1	1	1	1	1	1	1	1	1	1	1	1	1	1
3: G02a - Carico Pannelli Fonoassorbenti	1		1		1		1		1		1		1		1		1		1	
4: G02b - Carico Pannelli Fonoassorbenti DX		1		1		1		1		1		1		1		1		1		1
5: Q00 - Sovraccarico Accidentale																				
6: Q01 - Carico Neve	1	1	1	1	1	1	1	1	1	1	1	1	1	1	1	1	0.7	0.7	0.7	0.7
7: Q02a - Carico Vento Y+	0.6	0.6			0.6	0.6							0.6	0.6			1	1		
8: Q02b - Carico Vento Y-			0.6	0.6			0.6	0.6							0.6	0.6			1	1
9: Q03a - Effetti Aerodinamici Convogli Y+	0.8	0.8							0.8	0.8			0.8	0.8						
10: Q03b - Effetti Aerodinamici Convogli Y-			0.8	0.8							0.8	0.8			0.8	0.8				
11: T00 - DTu = +25°C					0.6	0.6			0.6	0.6			0.6	0.6						
12: T01 - DTu = -25°C							0.6	0.6			0.6	0.6			0.6	0.6				

CASES	SLE_61	SLE_62	SLE_63	SLE_64	SLE_65	SLE_66	SLE_67	SLE_68	SLE_69	SLE_70	SLE_71	SLE_72	SLE_73	SLE_74	SLE_75	SLE_76	SLE_77	SLE_78	SLE_79	SLE_80
1: G00 - Peso Proprio	1	1	1	1	1	1	1	1	1	1	1	1	1	1	1	1	1	1	1	1
2: G01 - Carico Permanente Sbalzo	1	1	1	1	1	1	1	1	1	1	1	1	1	1	1	1	1	1	1	1
3: G02a - Carico Pannelli Fonoassorbenti	1		1		1		1		1		1		1		1		1		1	
4: G02b - Carico Pannelli Fonoassorbenti DX		1		1		1		1		1		1		1		1		1		1
5: Q00 - Sovraccarico Accidentale																				
6: Q01 - Carico Neve																	0.7	0.7	0.7	0.7
7: Q02a - Carico Vento Y+	1	1			1	1			1	1			1	1			1	1		
8: Q02b - Carico Vento Y-			1	1			1	1			1	1			1	1			1	1
9: Q03a - Effetti Aerodinamici Convogli Y+	0.8	0.8	0.8	0.8													0.8	0.8	0.8	0.8
10: Q03b - Effetti Aerodinamici Convogli Y-					0.8	0.8	0.8	0.8												
11: T00 - DTu = +25°C									0.6	0.6	0.6	0.6								
12: T01 - DTu = -25°C													0.6	0.6	0.6	0.6				

CASES	SLE_81	SLE_82	SLE_83	SLE_84	SLE_85	SLE_86	SLE_87	SLE_88	SLE_89	SLE_90	SLE_91	SLE_92	SLE_93	SLE_94	SLE_95	SLE_96	SLE_97	SLE_98	SLE_99	SLE_100
1: G00 - Peso Proprio	1	1	1	1	1	1	1	1	1	1	1	1	1	1	1	1	1	1	1	1
2: G01 - Carico Permanente Sbalzo	1	1	1	1	1	1	1	1	1	1	1	1	1	1	1	1	1	1	1	1
3: G02a - Carico Pannelli Fonoassorbenti	1		1		1		1		1		1		1		1		1		1	
4: G02b - Carico Pannelli Fonoassorbenti DX		1		1		1		1		1		1		1		1		1		1
5: Q00 - Sovraccarico Accidentale																				
6: Q01 - Carico Neve	0.7	0.7	0.7	0.7	0.7	0.7	0.7	0.7	0.7	0.7	0.7	0.7								
7: Q02a - Carico Vento Y+	1	1			1	1			1	1			1	1			1	1		
8: Q02b - Carico Vento Y-			1	1			1	1			1	1			1	1			1	1
9: Q03a - Effetti Aerodinamici Convogli Y+													0.8	0.8	0.8	0.8	0.8	0.8	0.8	0.8
10: Q03b - Effetti Aerodinamici Convogli Y-	0.8	0.8	0.8	0.8																
11: T00 - DTu = +25°C					0.6	0.6	0.6	0.6					0.6	0.6	0.6	0.6				
12: T01 - DTu = -25°C									0.6	0.6	0.6	0.6					0.6	0.6	0.6	0.6

CASES	SLE_101	SLE_102	SLE_103	SLE_104	SLE_105	SLE_106	SLE_107	SLE_108	SLE_109	SLE_110	SLE_111	SLE_112	SLE_113	SLE_114	SLE_115	SLE_116	SLE_117	SLE_118	SLE_119	SLE_120
1: G00 - Peso Proprio	1	1	1	1	1	1	1	1	1	1	1	1	1	1	1	1	1	1	1	1
2: G01 - Carico Permanente Sbalzo	1	1	1	1	1	1	1	1	1	1	1	1	1	1	1	1	1	1	1	1
3: G02a - Carico Pannelli Fonoassorbenti	1		1		1		1		1		1		1		1		1		1	
4: G02b - Carico Pannelli Fonoassorbenti DX		1		1		1		1		1		1		1		1		1		1
5: Q00 - Sovraccarico Accidentale																				
6: Q01 - Carico Neve									0.7	0.7	0.7	0.7	0.7	0.7	0.7	0.7	0.7	0.7	0.7	0.7
7: Q02a - Carico Vento Y+	1	1			1	1			1	1			1	1			1	1		
8: Q02b - Carico Vento Y-			1	1			1	1			1	1			1	1			1	1
9: Q03a - Effetti Aerodinamici Convogli Y+									0.8	0.8	0.8	0.8	0.8	0.8	0.8	0.8				
10: Q03b - Effetti Aerodinamici Convogli Y-	0.8	0.8	0.8	0.8	0.8	0.8	0.8	0.8									0.8	0.8	0.8	0.8
11: T00 - DTu = +25°C	0.6	0.6	0.6	0.6					0.6	0.6	0.6	0.6					0.6	0.6	0.6	0.6
12: T01 - DTu = -25°C					0.6	0.6	0.6	0.6					0.6	0.6	0.6	0.6				

CASES	SLE_121	SLE_122	SLE_123	SLE_124	SLE_125	SLE_126	SLE_127	SLE_128	SLE_129	SLE_130	SLE_131	SLE_132	SLE_133	SLE_134	SLE_135	SLE_136	SLE_137	SLE_138	SLE_139	SLE_140
1: G00 - Peso Proprio	1	1	1	1	1	1	1	1	1	1	1	1	1	1	1	1	1	1	1	1
2: G01 - Carico Permanente Sbalzo	1	1	1	1	1	1	1	1	1	1	1	1	1	1	1	1	1	1	1	1
3: G02a - Carico Pannelli Fonoassorbenti	1		1		1		1		1		1		1		1		1		1	
4: G02b - Carico Pannelli Fonoassorbenti DX		1		1		1		1		1		1		1		1		1		1
5: Q00 - Sovraccarico Accidentale																				
6: Q01 - Carico Neve	0.7	0.7	0.7	0.7	0.7	0.7	0.7	0.7												
7: Q02a - Carico Vento Y+	1	1							0.6	0.6			0.6	0.6						
8: Q02b - Carico Vento Y-			1	1							0.6	0.6			0.6	0.6				
9: Q03a - Effetti Aerodinamici Convogli Y+					1	1			1	1	1	1					1	1	1	1
10: Q03b - Effetti Aerodinamici Convogli Y-	0.8	0.8	0.8	0.8			1	1					1	1	1	1				
11: T00 - DTu = +25°C																	0.6	0.6	0.6	0.6
12: T01 - DTu = -25°C	0.6	0.6	0.6	0.6																

CASES	SLE_141	SLE_142	SLE_143	SLE_144	SLE_145	SLE_146	SLE_147	SLE_148	SLE_149	SLE_150	SLE_151	SLE_152	SLE_153	SLE_154	SLE_155	SLE_156	SLE_157	SLE_158	SLE_159	SLE_160
1: G00 - Peso Proprio	1	1	1	1	1	1	1	1	1	1	1	1	1	1	1	1	1	1	1	1
2: G01 - Carico Permanente Sbalzo	1	1	1	1	1	1	1	1	1	1	1	1	1	1	1	1	1	1	1	1
3: G02a - Carico Pannelli Fonoassorbenti	1		1		1		1		1		1		1		1		1		1	
4: G02b - Carico Pannelli Fonoassorbenti DX		1		1		1		1		1		1		1		1		1		1
5: Q00 - Sovraccarico Accidentale																				
6: Q01 - Carico Neve					0.7	0.7	0.7	0.7	0.7	0.7	0.7	0.7	0.7	0.7	0.7	0.7	0.7	0.7	0.7	0.7
7: Q02a - Carico Vento Y+					0.6	0.6			0.6	0.6										
8: Q02b - Carico Vento Y-							0.6	0.6			0.6	0.6								
9: Q03a - Effetti Aerodinamici Convogli Y+					1	1	1	1					1	1	1	1				
10: Q03b - Effetti Aerodinamici Convogli Y-	1	1	1	1					1	1	1	1					1	1	1	1
11: T00 - DTu = +25°C													0.6	0.6	0.6	0.6				
12: T01 - DTu = -25°C	0.6	0.6	0.6	0.6													0.6	0.6	0.6	0.6

CASES	SLE_161	SLE_162	SLE_163	SLE_164	SLE_165	SLE_166	SLE_167	SLE_168	SLE_169	SLE_170	SLE_171	SLE_172	SLE_173	SLE_174	SLE_175	SLE_176	SLE_177	SLE_178	SLE_179	SLE_180
1: G00 - Peso Proprio	1	1	1	1	1	1	1	1	1	1	1	1	1	1	1	1	1	1	1	1
2: G01 - Carico Permanente Sbalzo	1	1	1	1	1	1	1	1	1	1	1	1	1	1	1	1	1	1	1	1
3: G02a - Carico Pannelli Fonoassorbenti	1		1		1		1		1		1		1		1		1		1	
4: G02b - Carico Pannelli Fonoassorbenti DX		1		1		1		1		1		1		1		1		1		1
5: Q00 - Sovraccarico Accidentale																				
6: Q01 - Carico Neve																	0.7	0.7	0.7	0.7
7: Q02a - Carico Vento Y+	0.6	0.6			0.6	0.6			0.6	0.6			0.6	0.6			0.6	0.6		
8: Q02b - Carico Vento Y-			0.6	0.6			0.6	0.6			0.6	0.6			0.6	0.6			0.6	0.6
9: Q03a - Effetti Aerodinamici Convogli Y+	1	1	1	1	1	1	1	1									1	1	1	1
10: Q03b - Effetti Aerodinamici Convogli Y-									1	1	1	1	1	1	1	1				
11: T00 - DTu = +25°C	0.6	0.6	0.6	0.6					0.6	0.6	0.6	0.6					0.6	0.6	0.6	0.6
12: T01 - DTu = -25°C					0.6	0.6	0.6	0.6					0.6	0.6	0.6	0.6				

CASES	SLE_181	SLE_182	SLE_183	SLE_184	SLE_185	SLE_186	SLE_187	SLE_188	SLE_189	SLE_190	SLE_191	SLE_192	SLE_193	SLE_194	SLE_195	SLE_196	SLE_197	SLE_198	SLE_199	SLE_200
1: G00 - Peso Proprio	1	1	1	1	1	1	1	1	1	1	1	1	1	1	1	1	1	1	1	1
2: G01 - Carico Permanente Sbalzo	1	1	1	1	1	1	1	1	1	1	1	1	1	1	1	1	1	1	1	1
3: G02a - Carico Pannelli Fonoassorbenti	1		1		1		1		1		1		1		1		1		1	
4: G02b - Carico Pannelli Fonoassorbenti DX		1		1		1		1		1		1		1		1		1		1
5: Q00 - Sovraccarico Accidentale																				
6: Q01 - Carico Neve	0.7	0.7	0.7	0.7	0.7	0.7	0.7	0.7	0.7	0.7	0.7	0.7	0.7	0.7	0.7	0.7				
7: Q02a - Carico Vento Y+	0.6	0.6			0.6	0.6			0.6	0.6							0.6	0.6		
8: Q02b - Carico Vento Y-			0.6	0.6			0.6	0.6			0.6	0.6							0.6	0.6
9: Q03a - Effetti Aerodinamici Convogli Y+	1	1	1	1																
10: Q03b - Effetti Aerodinamici Convogli Y-					1	1	1	1	1	1	1	1								
11: T00 - DTu = +25°C					0.6	0.6	0.6	0.6					1	1			1	1	1	1
12: T01 - DTu = -25°C	0.6	0.6	0.6	0.6					0.6	0.6	0.6	0.6			1	1				

CASES	SLE_201	SLE_202	SLE_203	SLE_204	SLE_205	SLE_206	SLE_207	SLE_208	SLE_209	SLE_210	SLE_211	SLE_212	SLE_213	SLE_214	SLE_215	SLE_216	SLE_217	SLE_218	SLE_219	SLE_220
1: G00 - Peso Proprio	1	1	1	1	1	1	1	1	1	1	1	1	1	1	1	1	1	1	1	1
2: G01 - Carico Permanente Sbalzo	1	1	1	1	1	1	1	1	1	1	1	1	1	1	1	1	1	1	1	1
3: G02a - Carico Pannelli Fonoassorbenti	1		1		1		1		1		1		1		1		1		1	
4: G02b - Carico Pannelli Fonoassorbenti DX		1		1		1		1		1		1		1		1		1		1
5: Q00 - Sovraccarico Accidentale																				
6: Q01 - Carico Neve													0.7	0.7	0.7	0.7	0.7	0.7	0.7	0.7
7: Q02a - Carico Vento Y+	0.6	0.6											0.6	0.6			0.6	0.6		
8: Q02b - Carico Vento Y-			0.6	0.6											0.6	0.6			0.6	0.6
9: Q03a - Effetti Aerodinamici Convogli Y+					0.8	0.8	0.8	0.8												
10: Q03b - Effetti Aerodinamici Convogli Y-									0.8	0.8	0.8	0.8								
11: T00 - DTu = +25°C					1	1	1	1					1	1	1	1				
12: T01 - DTu = -25°C	1	1	1	1					1	1	1	1					1	1	1	1

CASES	SLE_221	SLE_222	SLE_223	SLE_224	SLE_225	SLE_226	SLE_227	SLE_228	SLE_229	SLE_230	SLE_231	SLE_232	SLE_233	SLE_234	SLE_235	SLE_236	SLE_237	SLE_238	SLE_239	SLE_240
1: G00 - Peso Proprio	1	1	1	1	1	1	1	1	1	1	1	1	1	1	1	1	1	1	1	1
2: G01 - Carico Permanente Sbalzo	1	1	1	1	1	1	1	1	1	1	1	1	1	1	1	1	1	1	1	1
3: G02a - Carico Pannelli Fonoassorbenti	1		1		1		1		1		1		1		1		1		1	
4: G02b - Carico Pannelli Fonoassorbenti DX		1		1		1		1		1		1		1		1		1		1
5: Q00 - Sovraccarico Accidentale																				
6: Q01 - Carico Neve	0.7	0.7	0.7	0.7	0.7	0.7	0.7	0.7												
7: Q02a - Carico Vento Y+									0.6	0.6			0.6	0.6			0.6	0.6		
8: Q02b - Carico Vento Y-											0.6	0.6			0.6	0.6			0.6	0.6
9: Q03a - Effetti Aerodinamici Convogli Y+	0.8	0.8	0.8	0.8					0.8	0.8	0.8	0.8	0.8	0.8	0.8	0.8				
10: Q03b - Effetti Aerodinamici Convogli Y-					0.8	0.8	0.8	0.8									0.8	0.8	0.8	0.8
11: T00 - DTu = +25°C	1	1	1	1					1	1	1	1					1	1	1	1
12: T01 - DTu = -25°C					1	1	1	1					1	1	1	1				

CASES	SLE_241	SLE_242	SLE_243	SLE_244	SLE_245	SLE_246	SLE_247	SLE_248	SLE_249	SLE_250	SLE_251	SLE_252	SLE_253	SLE_254	SLE_255	SLE_256	SLE_257	SLE_258	SLE_259	SLE_260
1: G00 - Peso Proprio	1	1	1	1	1	1	1	1	1	1	1	1	1	1	1	1	1	1	1	1
2: G01 - Carico Permanente Sbalzo	1	1	1	1	1	1	1	1	1	1	1	1	1	1	1	1	1	1	1	1
3: G02a - Carico Pannelli Fonoassorbenti	1		1		1		1		1		1		1		1		1		1	
4: G02b - Carico Pannelli Fonoassorbenti DX		1		1		1		1		1		1		1		1		1		1
5: Q00 - Sovraccarico Accidentale																				
6: Q01 - Carico Neve					0.7	0.7	0.7	0.7	0.7	0.7	0.7	0.7	0.7	0.7	0.7	0.7	0.7	0.7	0.7	0.7
7: Q02a - Carico Vento Y+	0.6	0.6			0.6	0.6			0.6	0.6			0.6	0.6			0.6	0.6		
8: Q02b - Carico Vento Y-			0.6	0.6			0.6	0.6			0.6	0.6			0.6	0.6			0.6	0.6
9: Q03a - Effetti Aerodinamici Convogli Y+					0.8	0.8	0.8	0.8	0.8	0.8	0.8	0.8								
10: Q03b - Effetti Aerodinamici Convogli Y-	0.8	0.8	0.8	0.8									0.8	0.8	0.8	0.8	0.8	0.8	0.8	0.8
11: T00 - DTu = +25°C					1	1	1	1					1	1	1	1				
12: T01 - DTu = -25°C	1	1	1	1					1	1	1	1					1	1	1	1

Infine si riportano le combinazione sismiche allo SLV ottenute combinando i risultati dell'analisi spettrale (modi combinati secono la CQC) e i risultati dell'analisi lineare statica per i carichi permanenti.

	SLV-X	SLV-Y	SLC-X	SLC-Y
1: G00 - Peso Proprio [-]	1	1	1	1
2: G01 - Carico Permanente soletta [-]	1	1	1	1
3: G02a - Carico Pannelli Fonoassorbenti [-]	1	1	1	1
4: G02b - Carico Pannelli Fonoassorbenti DX [-]	0	0	0	0
5: Q00 - Sovraccarico Accidentale [-]	0	0	0	0
6: Q01 - Carico Neve [-]	0	0	0	0
7: Q02a - Carico Vento Y+ [-]	0	0	0	0
8: Q02b - Carico Vento Y- [-]	0	0	0	0
9: Q03a - Effetti Aerodinamici Convogli Y+ [-]	0	0	0	0
10: Q03b - Effetti Aerodinamici Convogli Y- [-]	0	0	0	0
11: T00 - DTu = +25°C [-]	0	0	0	0
12: T01 - DTu = -25°C [-]	0	0	0	0
13: SLV-X [CQC]	1	0	0	0
14: SLV-Y [CQC]	0	1	0	0
15: SLC-X [CQC]	0	0	1	0
16: SLC-Y [CQC]	0	0	0	1

10. RISULTATI DELLE ANALISI E VERIFICHE STRUTTURE DI ELEVAZIONE

10.1 RISULTATI DELL'ANALISI SISMICA

La seguente tabella estratta dal software di calcolo mostra i modi di vibrare considerati in direzione X e Y, le relative masse partecipanti (Partecipation) e accelerazione spettrale elastica (q=1) associata al modo (Spectral value).

```
EXCITATION CASE 1/2          : "SLV-X"
 DIRECTION VECTOR             : ( 9.810000E+00, 0.000000E+00, 0.000000E+00)
 SPECTRAL TABLE               : "Spettro Ponte Gardena_SLV"
```

MODAL EXCITATION

Mode	Spectral Value	Excitation	Amplitude	Participation (%)
1	2.218851E-01	4.459836E+01	1.129364E-01	0.006
2	2.405884E-01	3.568793E+03	8.341221E+00	39.975
3	2.660000E-01	4.731534E+00	7.733724E-03	0.000
4	2.660000E-01	1.015057E+02	1.340566E-01	0.032
5	2.660000E-01	3.812366E+00	4.066921E-03	0.000
6	2.660000E-01	6.582670E+00	5.189284E-03	0.000
7	2.660000E-01	2.927840E+01	1.912565E-02	0.003
8	2.660000E-01	2.362719E+01	1.319099E-02	0.002
9	2.660000E-01	1.235141E+02	5.217197E-02	0.048
10	2.660000E-01	4.602441E+01	1.724788E-02	0.007
11	2.660000E-01	1.897046E+01	6.933371E-03	0.001
12	2.660000E-01	1.045391E+01	3.786080E-03	0.000
13	2.660000E-01	5.390613E+00	1.943366E-03	0.000
14	2.660000E-01	3.118458E+00	1.121220E-03	0.000
15	2.660000E-01	1.294438E+00	4.647175E-04	0.000
16	2.660000E-01	2.368427E+02	6.623604E-02	0.176
17	2.660000E-01	4.855920E-02	1.176838E-05	0.000
18	2.649186E-01	2.745067E+00	6.357877E-04	0.000
19	2.642918E-01	2.380128E+00	5.457864E-04	0.000
20	2.639164E-01	2.527098E-02	5.760241E-06	0.000
21	2.635172E-01	7.751966E-01	1.755719E-04	0.000
22	2.633268E-01	1.069389E-02	2.414644E-06	0.000
23	2.632297E-01	2.593206E-01	5.846249E-05	0.000
24	2.631822E-01	2.916066E-03	6.569117E-07	0.000
25	2.598250E-01	2.075432E+00	4.427780E-04	0.000
26	2.598240E-01	2.309352E-01	4.926751E-05	0.000
27	2.576299E-01	7.056341E+00	1.451979E-03	0.000
28	2.426342E-01	2.482506E+02	3.939103E-02	0.193
29	2.337766E-01	3.642166E+02	4.898112E-02	0.416
30	2.317749E-01	2.369060E+01	3.064890E-03	0.002
31	2.317714E-01	4.357907E+00	5.637509E-04	0.000
32	2.317706E-01	9.485269E+00	1.227022E-03	0.000
33	2.317701E-01	1.396653E+00	1.806705E-04	0.000
34	2.317699E-01	3.758384E+00	4.861811E-04	0.000
35	2.317698E-01	5.689771E-01	7.360218E-05	0.000
36	2.317697E-01	1.445693E+00	1.870129E-04	0.000
37	2.317697E-01	1.602528E-01	2.073007E-05	0.000
38	2.317661E-01	6.792584E+01	8.786172E-03	0.014
39	2.317463E-01	2.044885E+01	2.644028E-03	0.001
40	2.297933E-01	2.415075E+00	3.005241E-04	0.000
41	2.217759E-01	2.434748E+02	2.573940E-02	0.186
42	2.145956E-01	1.618370E+02	1.466025E-02	0.082
43	2.040419E-01	6.587363E+01	4.676864E-03	0.014
44	1.990987E-01	2.014988E+02	1.266438E-02	0.127

45	1.943725E-01	2.531866E+02	1.408881E-02	0.201
46	1.810778E-01	1.269570E+03	4.857727E-02	5.059
47	1.800648E-01	6.692466E+01	2.483164E-03	0.014
48	1.768512E-01	2.628205E+01	8.824203E-04	0.002
49	1.763149E-01	1.059228E+01	3.496270E-04	0.000
50	1.757069E-01	9.148944E+00	2.961679E-04	0.000
51	1.754856E-01	3.519053E+00	1.131104E-04	0.000
52	1.753152E-01	2.405669E+00	7.690040E-05	0.000
53	1.700083E-01	9.504974E+01	2.545818E-03	0.028
54	1.678448E-01	2.593308E+01	6.440247E-04	0.002
55	1.668901E-01	2.883884E+02	6.922117E-03	0.261
56	1.659942E-01	2.966685E+00	6.894191E-05	0.000
57	1.659849E-01	5.677646E+00	1.318964E-04	0.000
58	1.659834E-01	7.057414E+00	1.639406E-04	0.000
59	1.659832E-01	4.871169E+00	1.131545E-04	0.000
60	1.659830E-01	4.812248E+00	1.117848E-04	0.000
61	1.659829E-01	1.146021E+00	2.662108E-05	0.000
62	1.659828E-01	4.782243E-01	1.110870E-05	0.000
63	1.659827E-01	3.070635E-01	7.132783E-06	0.000
64	1.659827E-01	6.474872E-02	1.504048E-06	0.000
65	1.659818E-01	1.916738E+00	4.452236E-05	0.000
66	1.630150E-01	4.732596E+01	9.847429E-04	0.007
67	1.605393E-01	3.375026E+02	6.383227E-03	0.358
68	1.600438E-01	7.532389E+01	1.397062E-03	0.018
69	1.593718E-01	1.144375E+01	2.066556E-04	0.000
70	1.588402E-01	1.253910E+01	2.216572E-04	0.000
71	1.587321E-01	3.463882E+01	6.096576E-04	0.004
72	1.583259E-01	1.622668E+01	2.809393E-04	0.001
73	1.577245E-01	1.805360E+01	3.049937E-04	0.001
74	1.576968E-01	1.129538E+01	1.906048E-04	0.000
75	1.575893E-01	2.457981E+00	4.129482E-05	0.000
76	1.575354E-01	3.353475E-01	5.621479E-06	0.000
77	1.575116E-01	2.897244E-02	4.851947E-07	0.000
78	1.553449E-01	4.929053E+01	7.539155E-04	0.008
79	1.519783E-01	2.631876E+03	3.473751E-02	21.741
80	1.508915E-01	7.483632E+02	9.401019E-03	1.758
81	1.507651E-01	1.848236E+02	2.308320E-03	0.107
82	1.490814E-01	1.023706E+02	1.181790E-03	0.033
83	1.473269E-01	1.363455E+03	1.446261E-02	5.835
84	1.468620E-01	4.465131E+01	4.629047E-04	0.006
85	1.463451E-01	7.689748E+01	7.769728E-04	0.019
86	1.459364E-01	1.382943E+02	1.368953E-03	0.060
87	1.441326E-01	2.454395E+02	2.214793E-03	0.189
88	1.441074E-01	4.052158E+00	3.651771E-05	0.000
89	1.441067E-01	1.669865E+01	1.504813E-04	0.001
90	1.441060E-01	3.505171E+00	3.158600E-05	0.000
91	1.441059E-01	2.374167E+01	2.139408E-04	0.002
92	1.441057E-01	7.019905E+00	6.325701E-05	0.000
93	1.441056E-01	5.652277E+00	5.093306E-05	0.000
94	1.441054E-01	3.823997E+00	3.445783E-05	0.000
95	1.441040E-01	9.159326E+00	8.252846E-05	0.000
96	1.440937E-01	6.134780E+01	5.524657E-04	0.012
97	1.439833E-01	2.436007E+01	2.181089E-04	0.002
98	1.432219E-01	1.248018E+03	1.073360E-02	4.889
99	1.422439E-01	1.052785E+03	8.590294E-03	3.479
100	1.416835E-01	2.480383E+00	1.962792E-05	0.000

TOTAL MASS PARTICIPATION 85.385%

EXCITATION CASE 2/2 : "SLV-Y"
DIRECTION VECTOR : (0.000000E+00, 9.810000E+00, 0.000000E+00)
SPECTRAL TABLE : "Spettro Ponte Gardena_SLV"

MODAL EXCITATION

Mode	Spectral Value	Excitation	Amplitude	Participation (%)
1	2.218851E-01	4.244323E+03	1.074789E+01	56.540
2	2.405884E-01	2.895993E+01	6.768707E-02	0.003
3	2.660000E-01	8.080434E+01	1.320752E-01	0.020
4	2.660000E-01	5.906894E+00	7.801120E-03	0.000
5	2.660000E-01	9.615036E+01	1.025704E-01	0.029
6	2.660000E-01	1.971894E+03	1.554493E+00	12.204
7	2.660000E-01	8.410391E+02	5.493953E-01	2.220
8	2.660000E-01	1.918899E+03	1.071315E+00	11.557
9	2.660000E-01	2.501035E+00	1.056430E-03	0.000
10	2.660000E-01	2.998527E+00	1.123713E-03	0.000
11	2.660000E-01	2.953404E-01	1.079417E-04	0.000
12	2.660000E-01	9.947838E-02	3.602797E-05	0.000
13	2.660000E-01	8.138490E-02	2.934000E-05	0.000
14	2.660000E-01	1.343787E-01	4.831494E-05	0.000
15	2.660000E-01	1.914207E-02	6.872215E-06	0.000
16	2.660000E-01	5.900399E+01	1.650121E-02	0.011
17	2.660000E-01	2.648063E-02	6.417609E-06	0.000
18	2.649186E-01	1.556029E-02	3.603936E-06	0.000
19	2.642918E-01	2.832958E+02	6.496248E-02	0.252
20	2.639164E-01	2.360397E-02	5.380265E-06	0.000
21	2.635172E-01	8.104706E-04	1.835610E-07	0.000
22	2.633268E-01	2.307156E-03	5.209477E-07	0.000
23	2.632297E-01	3.751903E-04	8.458473E-08	0.000
24	2.631822E-01	5.930275E-04	1.335932E-07	0.000
25	2.598250E-01	4.831133E-03	1.030686E-06	0.000
26	2.598240E-01	5.995680E-01	1.279113E-04	0.000
27	2.576299E-01	1.567574E+02	3.225588E-02	0.077
28	2.426342E-01	2.925533E-01	4.642073E-05	0.000
29	2.337766E-01	1.418405E+01	1.907520E-03	0.001
30	2.317749E-01	7.722955E-03	9.991306E-07	0.000
31	2.317714E-01	1.744107E-02	2.256225E-06	0.000
32	2.317706E-01	2.487497E-03	3.217845E-07	0.000
33	2.317701E-01	9.522229E-03	1.231792E-06	0.000
34	2.317699E-01	2.571608E-03	3.326609E-07	0.000
35	2.317698E-01	3.817889E-03	4.938774E-07	0.000
36	2.317697E-01	1.157737E-03	1.497632E-07	0.000
37	2.317697E-01	1.032728E-03	1.335922E-07	0.000
38	2.317661E-01	2.181666E-01	2.821973E-05	0.000
39	2.317463E-01	1.256465E+00	1.624604E-04	0.000
40	2.297933E-01	5.257781E-02	6.542613E-06	0.000
41	2.217759E-01	2.092084E-01	2.211686E-05	0.000
42	2.145956E-01	1.660955E+01	1.504602E-03	0.001
43	2.040419E-01	2.129928E+01	1.512196E-03	0.001
44	1.990987E-01	1.798043E+01	1.130086E-03	0.001
45	1.943725E-01	1.390150E+01	7.735619E-04	0.001
46	1.810778E-01	4.120770E+01	1.576721E-03	0.005
47	1.800648E-01	3.723328E+02	1.381499E-02	0.435
48	1.768512E-01	6.413369E+00	2.153290E-04	0.000
49	1.763149E-01	1.435617E+02	4.738642E-03	0.065
50	1.757069E-01	5.577359E+00	1.805492E-04	0.000
51	1.754856E-01	4.887464E+01	1.570942E-03	0.007
52	1.753152E-01	1.481975E+00	4.737328E-05	0.000
53	1.700083E-01	4.152642E+02	1.112246E-02	0.541

54	1.678448E-01	1.038589E+01	2.579241E-04	0.000
55	1.668901E-01	6.131752E+02	1.471790E-02	1.180
56	1.659942E-01	1.882246E+01	4.374095E-04	0.001
57	1.659849E-01	4.611503E+00	1.071290E-04	0.000
58	1.659834E-01	9.859548E+00	2.290329E-04	0.000
59	1.659832E-01	7.175575E+00	1.666846E-04	0.000
60	1.659830E-01	6.889925E+00	1.600476E-04	0.000
61	1.659829E-01	1.575581E+00	3.659938E-05	0.000
62	1.659828E-01	6.640396E-01	1.542502E-05	0.000
63	1.659827E-01	4.073304E-01	9.461886E-06	0.000
64	1.659827E-01	8.674622E-02	2.015028E-06	0.000
65	1.659818E-01	2.267660E+00	5.267363E-05	0.000
66	1.630150E-01	3.877284E+01	8.067724E-04	0.005
67	1.605393E-01	8.074414E+02	1.527123E-02	2.046
68	1.600438E-01	1.737067E+02	3.221807E-03	0.095
69	1.593718E-01	7.469701E+00	1.348907E-04	0.000
70	1.588402E-01	2.279991E+02	4.030403E-03	0.163
71	1.587321E-01	1.828492E+01	3.218222E-04	0.001
72	1.583259E-01	8.465664E+00	1.465695E-04	0.000
73	1.577245E-01	6.999242E+01	1.182437E-03	0.015
74	1.576968E-01	3.589186E+00	6.056599E-05	0.000
75	1.575893E-01	1.167606E+01	1.961612E-04	0.000
76	1.575354E-01	1.060527E-01	1.777777E-06	0.000
77	1.575116E-01	4.863459E-01	8.144722E-06	0.000
78	1.553449E-01	5.675505E+00	8.680879E-05	0.000
79	1.519783E-01	1.149209E+02	1.516814E-03	0.041
80	1.508915E-01	6.837863E+01	8.589797E-04	0.015
81	1.507651E-01	3.237901E+00	4.043917E-05	0.000
82	1.490814E-01	2.267196E+01	2.617302E-04	0.002
83	1.473269E-01	2.170303E+02	2.302110E-03	0.148
84	1.468620E-01	8.491254E+01	8.802969E-04	0.023
85	1.463451E-01	1.658600E+00	1.675851E-05	0.000
86	1.459364E-01	3.840838E+01	3.801983E-04	0.005
87	1.441326E-01	1.213914E+00	1.095410E-05	0.000
88	1.441074E-01	2.881544E+00	2.596823E-05	0.000
89	1.441067E-01	1.094922E+00	9.866975E-06	0.000
90	1.441060E-01	2.629292E+00	2.369323E-05	0.000
91	1.441059E-01	2.710110E+00	2.442132E-05	0.000
92	1.441057E-01	1.174680E+00	1.058515E-05	0.000
93	1.441056E-01	8.752161E-02	7.886632E-07	0.000
94	1.441054E-01	1.654339E+00	1.490716E-05	0.000
95	1.441040E-01	2.587740E-01	2.331637E-06	0.000
96	1.440937E-01	3.889178E+00	3.502387E-05	0.000
97	1.439833E-01	6.653384E+00	5.957133E-05	0.000
98	1.432219E-01	1.876309E+01	1.613722E-04	0.001
99	1.422439E-01	1.867502E+01	1.523806E-04	0.001
100	1.416835E-01	5.902213E+00	4.670575E-05	0.000

TOTAL MASS PARTICIPATION 87.717%

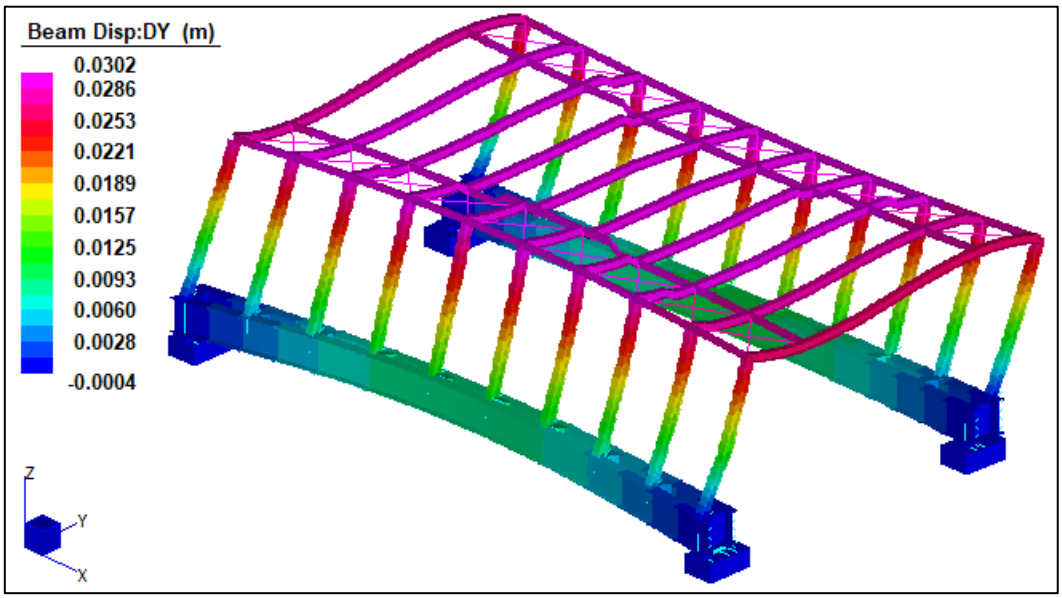

Figura 10-1: *Contour dello spostamento DY SLV-Y(CQC)*

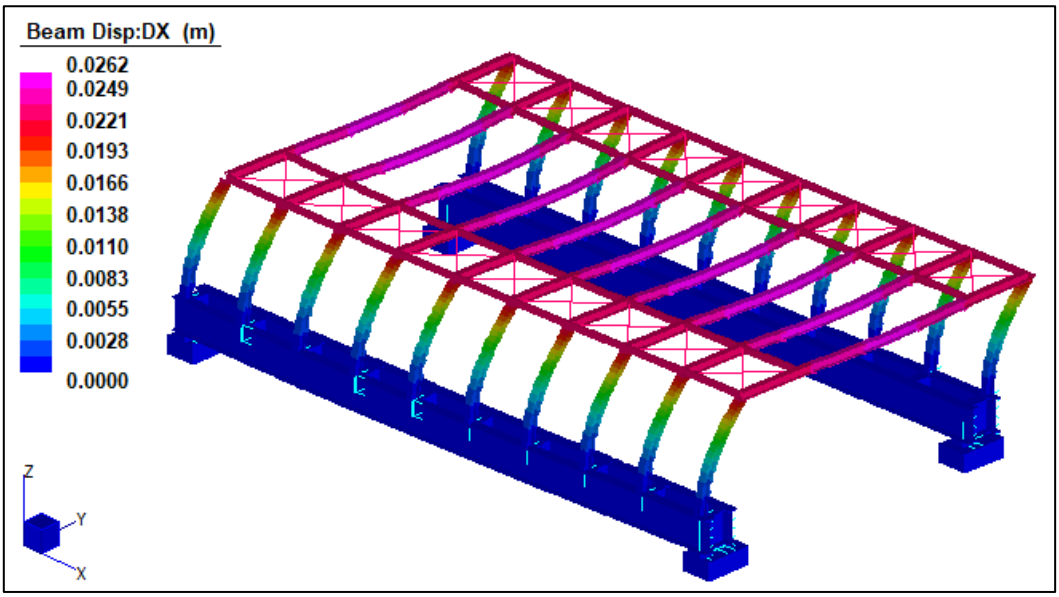

Figura 10-2: *Contour dello spostamento DX SLV-X(CQC)*

Gli spostamenti sono confrontabili con quelli statici di cui al §10.3.

10.2VERIFICHE DI RESISTENZA

10.2.1 Piastra portante getto

Segue la verifica della lamiera metallica utilizzata come cassero a perdere per il getto della soletta.

VERIFICA DI DEFORMABILITA' E RESISTENZA CASSERO LASTRA METALLICA

INPUT

Input Generali

Modulo elastico acciaio	E_a [Mpa]	206000
Coefficiente di fattorizzazione carichi	γ_{G1}	1.3
Coefficiente di fattorizzazione carichi	$\gamma_{G2\text{-}Qk}$	1.5

Input Geometrici

Luce della trave	L [m]	0.700
Larghezza di carico a sinistra	L_{SX} [m]	1.000
Larghezza di carico a destra	L_{DX} [m]	1.000
Larghezza di influenza del carico	L_{INFL} [m]	1.00

Carichi applicati		*Distribuito* [kN/m²]	*Lineare* [kN/m]	*Concentrato* [kN]
Carico permanente strutturale	G_1	3.60	0.00	0.00
Carico permanente non strutturale	G_2	0.00	0.00	0.00
Carico variabile	Q_k	0.00	0.00	0.00

Caratteristiche geometriche della sezione in acciaio

Nome profilo		CUSTOM PLATE
Numero di travi	n_T	1

Input addizionali solo per sezione PLATE

Base (Rectangular)	b [mm]	1 000
Height (Rectangular)	h [mm]	6.0

Limiti di deformabilità		L/f_{LIM}
Carico permanente strutturale	G_1	250
Carico permanente strutturale	G_2	250
Variabile	Q_k	250
TOTALE	$G_1+G_2+Q_k$	250

OUTPUT (SIMPLY SUPPORTED BEAM)

Sollecitazioni	*Carico lineare* A_d [KN/m]	*Momento* M_{Sd} [kNm]	*Taglio* V_{Sd} [kN]
Condizione di carico G1	3.60	0.22	1.26
Condizione di carico G2	0.00	0.00	0.00
Condizione di carico Qk	0.00	0.00	0.00
Combinazione SLE Rara	**3.60**	**0.22**	**1.26**
Combinazione SLU	**4.68**	**0.29**	**1.64**

Caratteristiche meccaniche della sezione

Inerzia profilo metallico	$I_{y,a}$ [cm⁴]	1.80
Rapporto tra l'inerzia della sezione composta e acciaio	$I_{y,eff}/I_{y,a}$	1.00
Inerzia sezione composta	$I_{y,eff}$ [cm⁴]	1.80

Verifica di deformabilità		f [cm]	f_{lim} [cm]	L/f
	G_1	0.30	0.28	231
	G_2	0.00	0.28	-
	Q_k	0.00	0.28	-
	$G_1+G_2+Q_k$	0.30	0.28	231

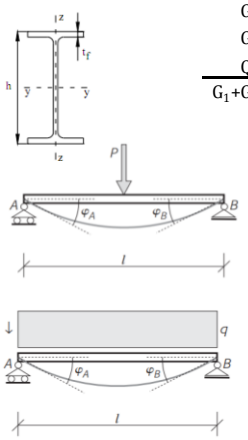

$M_{max} = \frac{Pl}{4}$ in mezzeria

$V_{max} = \frac{P}{2}$

$\varphi_A = -\varphi_B = \frac{Pl^2}{16\,EI}$

$\delta_d = \delta_{l/2} = \frac{Pl^3}{48\,EI}$

$M_{max} = \frac{ql^2}{8}$ in mezzeria

$V_{max} = \frac{ql}{2}$

$\varphi_A = -\varphi_B = \frac{ql^3}{24\,EI}$

$\delta_d = \delta_{l/2} = \frac{5}{384} \cdot \frac{ql^4}{EI}$

PROCESSING

Caratteristiche meccaniche della sezione		CUSTOM PLATE
Modulo di resistenza elastico	$W_{y,a,el}$ [cm³]	6.00
Spessore anima	t_w [mm]	1000
Altezza	h [mm]	6.0
Peso lineare	p [kg/m]	0

RESISTANCE VERIFICATION

Verifica di resistenza della sezione di solo acciaio

Tensioni normali	σ_a [Mpa]	48
Tensioni tangenziali	τ_a [Mpa]	0
Tensioni ideali	σ_{id} [Mpa]	**48**

La freccia risulta leggermente superiore al limite, ma considerando che la lastra sarà fissata con dei punti di saldatura essa risulterà incastrata ai bordi e non semplicemente appoggiata come calcolata.

10.2.2 Soletta

Per la soletta si considera lo schema statico di semplice appoggio sulle piattabande delle travi principali, con luce netta pertanto di 70 cm. Segue il calcolo delle sollecitazioni e verifica sezionale.

CALCOLO SOLLECITAZIONI SOLETTA IN SEMPLICE APPOGGIO

INPUT

Input Generali		
Peso specifico c.a.	γ_{eq} [kN/m^3]	25
Coefficiente di fattorizzazione carichi	γ_{G1}	1.3
Coefficiente di fattorizzazione carichi	γ_{G2}	1.50
Coefficiente di fattorizzazione carichi	γ_{Qk}	1.5
Coefficienti di combinazione	ψ_1	0.7
Coefficienti di combinazione	ψ_2	0.20

Geometria della trave		
Luce della trave	L [m]	0.70
Larghezza sezione trave	b [cm]	100
Altezza sezione trave	h [cm]	15

Geometria del campo di carico (per carico distribuito)		
Larghezza del campo a sinistra	L_{SX} [m]	1.00
Larghezza del campo a destra	L_{DX} [m]	1.00
Larghezza di influenza del carico	$L_{INFL,RET}$ [m]	1.00

Carichi applicati		*Distribuito* [kN/m^2]	*Triangolare* [kN/m^2]	*Lineare* [kN/m]	*Concentrato* [kN]
Carico permanente strutturale	G_1	0.00	0.00	3.75	0.00
Carico permanente non strutturale	G_2	0.10	0.00	0.00	0.00
Carico variabile	Q_k	10.00	0.00	0.00	0.00

OUTPUT

Carico sulla trave	*Lineare + distribuito* A_d [KN/m]	*Triangolare* A_d [KN/m]
Condizione di carico G1	3.75	0.00
Condizione di carico G2	0.10	0.00
Condizione di carico Qk	10.00	0.00

Sollecitazioni elementari	*Momento positivo* M_{Sd}^+ [kNm]	*Momento negativo* M_{Sd}^- [kNm]	*Taglio* V_{Sd} [kN]
Condizione di carico G1	0.23	0.00	1.31
Condizione di carico G2	0.01	0.00	0.04
Condizione di carico Qk	0.61	0.00	3.50

Sollecitazioni combinate	*Momento positivo* M_{Sd}^+ [kNm]	*Momento negativo* M_{Sd}^- [kNm]	*Taglio* V_{Sd} [kN]
Combinazione SLE Quasi Permanente	0.36	0.00	2.05
Combinazione SLE Frequente	0.66	0.00	3.80
Combinazione SLE Rara	0.85	0.00	4.85
Combinazione SLU	1.23	0.00	7.01

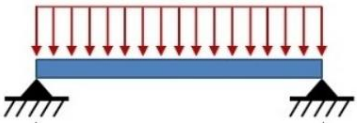

VERIFICA SOLETTA

INPUT

SOLLECITAZIONI DI VERIFICA

Combinazione	N_{Sd} [kN]	M_{Sd} [kNm]	V_{Sd} [kN]
SLE Quasi Permanente	**0.00**	**0.36**	**-**
SLE Frequente	**0.00**	**0.66**	**-**
SLE Rara	**0.00**	**0.85**	**-**
SLU	**0.00**	**1.23**	**7.01**
SLV	**0.00**	**0.00**	**0.00**

CARATTERISTICHE GEOMETRICHE DELLA SEZIONE IN C.A.

Geometria della sezione		
Base (ortogonale al Taglio)	B [cm]	**100**
Altezza (parallela al Taglio)	H [cm]	**15**
Altezza utile della sezione	d [cm]	**14**
Area di calcestruzzo	A_c [cm^2]	**1500**

Armatura longitudinale tesa		1° STRATO	2° STRATO	3° STRATO
Numero Barre	n	**5**	**0**	**0**
Diametro	ϕ[mm]	**8**	**0**	**0**
Posizione dal lembo esterno	c [cm]	**1.4**	**0.0**	**0.0**
Area strato	As [cm^2]	2.51	0.00	0.00
Rapporto di armatura	ρ [%]		**0.185%**	

Armatura longitudinale compressa		1° STRATO	2° STRATO	3° STRATO
Numero Barre	n	**5**	**0**	**0**
Diametro	ϕ[mm]	**8**	**0**	**0**
Posizione dal lembo esterno	c' [cm]	**1.4**	**0.0**	**0.0**
Area strato	As' [cm^2]	2.51	0.00	0.00
Rapporto di armatura	ρ' [%]		**0.185%**	

Armatura trasversale		1° TIPO	2° TIPO	3° TIPO
Diametro	ϕ[mm]	**0**	**0**	**0**
Numero bracci	n_{bi}	**0**	**0**	**0**
Passo	s_w [cm]	**0**	**0**	**0**
Inclinazione	α [deg]	**90**	**90**	**90**
Area armatura a metro	A_{sw}/s_w [cm^2/m]	0.00	0.00	0.00

CARATTERISTICHE REOLOGICHE DEI MATERIALI

Concrete		
Resistenza cubica a compressione	RCK	**40**
Resistenza cilindrica caratteristica a compressione	f_{ck} [Mpa]	32.00
Resistenza cilindrica media a compressione	f_{cm} [Mpa]	40.00
Resistenza media a trazione per flessione	f_{ctm} [Mpa]	3.02
Resistenza caratteristica a trazione per flessione	f_{ctk} [Mpa]	2.12
Resistenza di progetto a compressione	f_{cd} [Mpa]	18.13
Resistenza di progetto delle bielle compresse	$f_{cd'}$ [Mpa]	9.49

Acciaio		
Resistenza di progetto a snervamento	f_{yd} [Mpa]	391.30

OUTPUT

VERIFICHE IN ESERCIZIO

Verifica Tensionale			σ limit
Calcestruzzo SLE Quasi Permanente	σ_c [Mpa] =	**0.19**	**14.40**
Calcestruzzo SLE Rara	σ_c [Mpa] =	**0.44**	**19.20**
Acciaio SLE Rara	σ_s [Mpa] =	**26.70**	**360.00**

Verifica di fessurazione			w limit
Combinazione SLE Quasi permanente	w_d [mm] =	**0.000**	**0.200**
Combinazione SLE Frequente	w_d [mm] =	**0.000**	**0.300**

VERIFICA DI RESISTENZA A TAGLIO

Sollecitazioni di progetto		
Taglio sollecitante = max Taglio(SLU,SLV)	V_{Sd} [kN]	7.0
Sforzo Normale concomitante al massimo taglio	N_{Sd} [kN]	0.0

Verifica di resistenza in assenza di armatura specifica		
Resistenza di progetto senza armatura specifica	V_{Rd1} [KN]	76.16
Coefficiente di sicurezza	V_{Rd1}/V_{Sd}	**10.87**

Verifica di resistenza dell'armatura specifica		
CoTan(θ) di progetto	cotan(θ)	2.5
Resistenza a taglio delle bielle compresse in cls	$V_{Rd2}(\theta)$ [KN]	-
Resistenza a taglio dell'armatura	$V_{Rd3}(\theta)$ [KN]	-
Resistenza a taglio di progetto	V_{Rd} [KN]	-
Coefficiente di sicurezza	V_{Rd}/V_{Sd}	-

VERIFICA DI RESISTENZA A PRESSO-FLESSIONE

Sollecitazioni di progetto		SLU	SLV
Momento sollecitante	M_{Sd} [kNm]	1.2	0.0
Sforzo Normale concomitante	N_{Sd} [kN]	0.0	0.0

Verifica di resistenza in termini di momento		SLU	SLV
Momento resistente	M_{Rd} [kNm]	13.5	13.5
Coefficiente di sicurezza	M_{Rd}/M_{Sd}	**10.99**	-

Verifica di resistenza in termini di sforzo normale		SLU	SLV
Sforzo normale resistente	N_{Rd} [kN]	-	-
Coefficiente di sicurezza	N_{Rd}/N_{Sd}	-	-

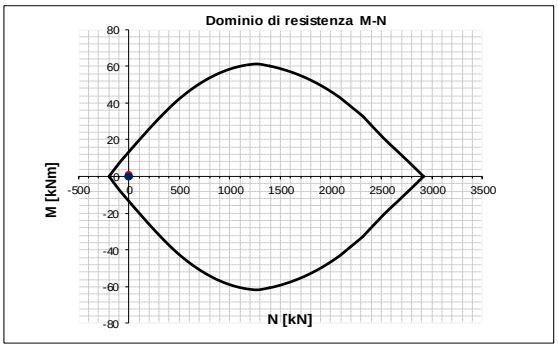

10.2.3 Trave principale

Si riporta di seguito il diagramma dell'inviluppo di momento flettente e taglio.

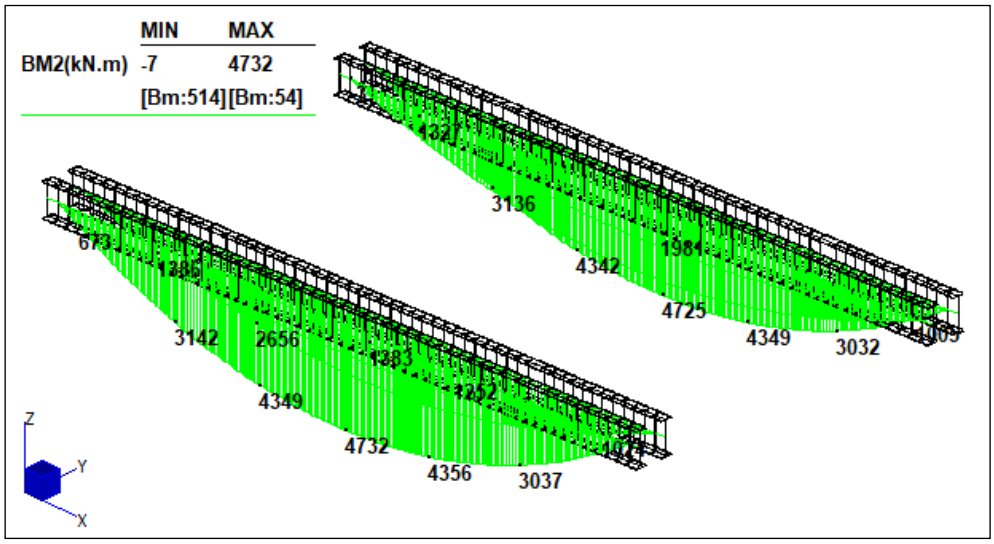

Figura 10-3: *Momento Flettente – Inviluppo SLU*

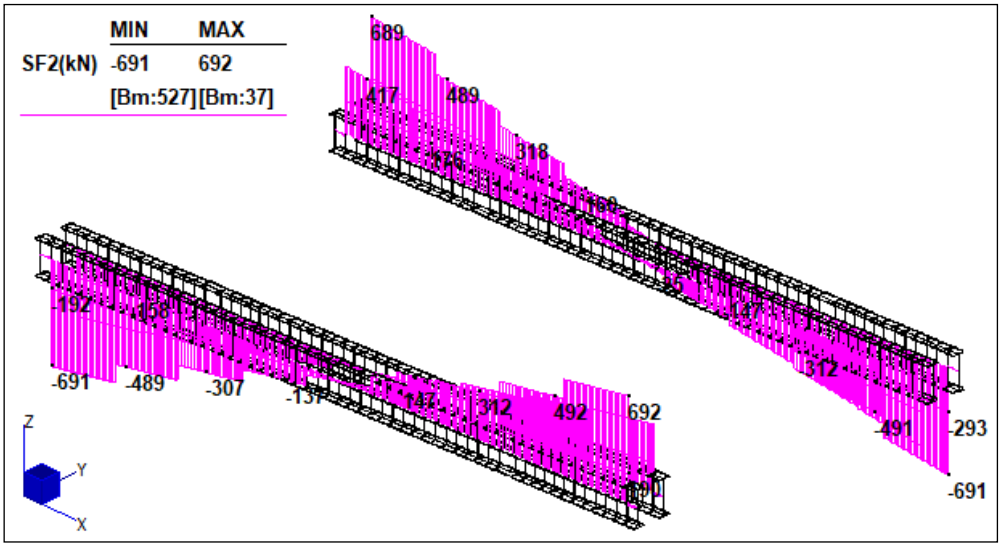

Figura 10-4: *Taglio– Inviluppo SLU*

La combinazione che produce il momento maggiore è la SLU39. Al fine di eseguire la verifica della trave composta occorre eseguire il calcolo per fasi.

Le tre fasi di carico sono le seguenti:

- **Fase I** – In tale fase le caratteristiche statiche delle travi sono quelle delle sole travi metalliche e i carichi sono quelli derivanti dal peso proprio delle strutture di acciaio e del peso della soletta in c.a. non ancora collaborante.
- **Fase II** – In tale fase le caratteristiche statiche delle travi sono quelle della sezione composta con il coefficiente di omogeneizzazione a lungo termine (n_{LT}) mentre i carichi sono quelli derivanti dai pesi dei rimanenti carichi permanenti portati (quali cordoli, barriere, pavimentazioni, …).
- **Fase III** – In tale fase le caratteristiche statiche della sezione sono quelle della sezione composta con il coefficiente di omogeneizzazione a breve termine (n_{ST}) mentre i carichi sono le azioni variabili.

Sono state eseguite pertanto ulteriori 3 combinazioni al fine di scomporre gli effetti della combinazione SLU39 nelle 3 fasi. Si riporta sotto il dettaglio delle combinazioni di carico.

	FASE 1-SLU	FASE 2-SLU	FASE 3-SLU_39
1: G00 - Peso Proprio [-]	1.35	0	0
2: G01 - Carico Permanente soletta [-]	1.35	0	0
3: G02a - Carico Pannelli Fonoassorbenti [-]	0	1.5	0
4: G02b - Carico Pannelli Fonoassorbenti DX [-]	0	0	0
5: Q00 - Sovraccarico Accidentale [-]	0	0	0
6: Q01 - Carico Neve [-]	0	0	1.5
7: Q02a - Carico Vento Y+ [-]	0	0	0
8: Q02b - Carico Vento Y- [-]	0	0	0
9: Q03a - Effetti Aerodinamici Convogli Y+ [-]	0	0	0
10: Q03b - Effetti Aerodinamici Convogli Y- [-]	0	0	0
11: T00 - DTu = +25°C [-]	0	0	0
12: T01 - DTu = -25°C [-]	0	0	0.9

Seguono quindi i diagrimmi delle sollecitazioni cosi ottenute:

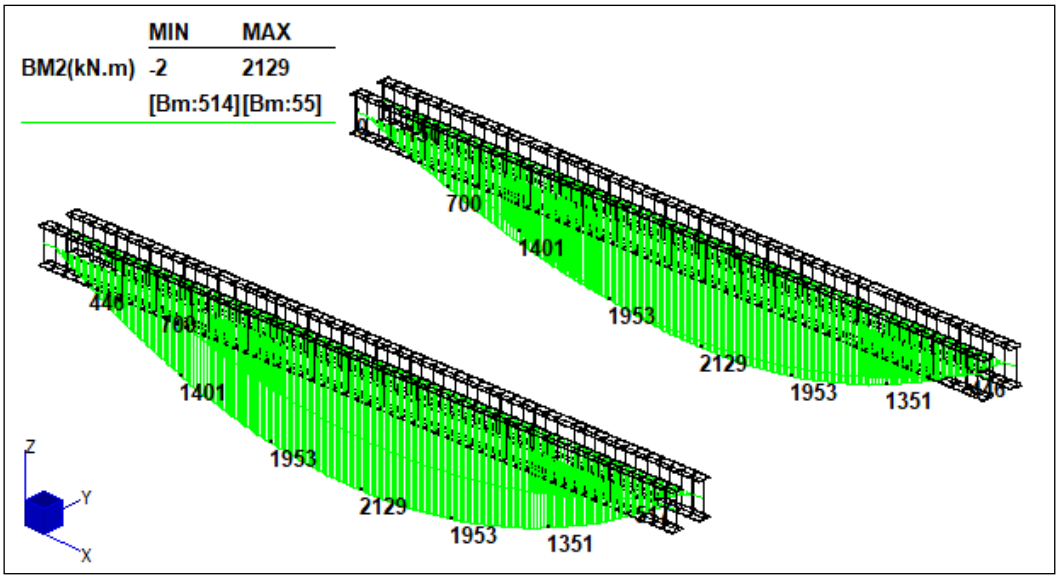

Figura 10-5: *Momento Flettente FASE 1-SLU*

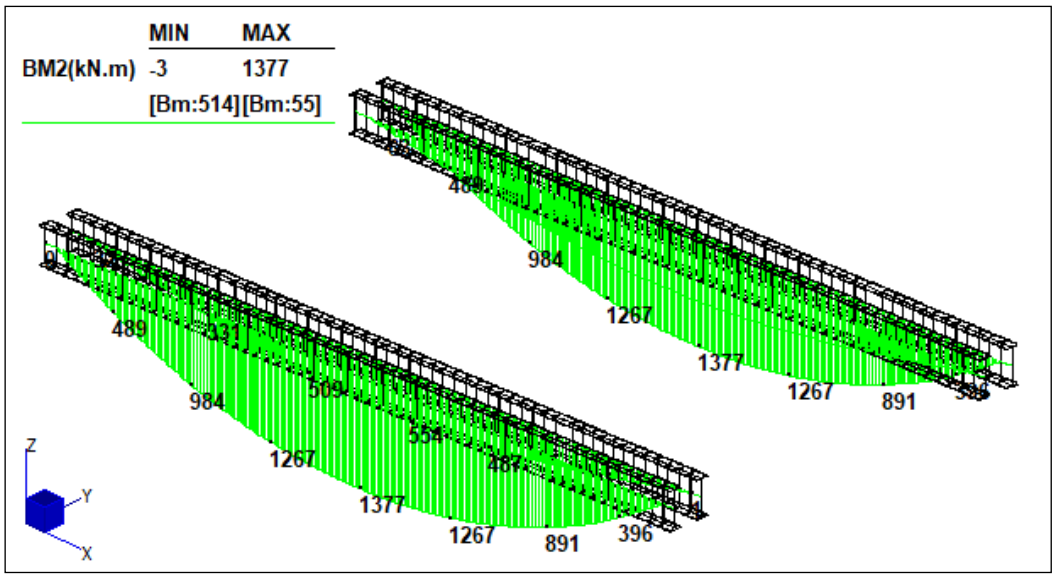

Figura 10-6: *Momento Flettente FASE 2-SLU*

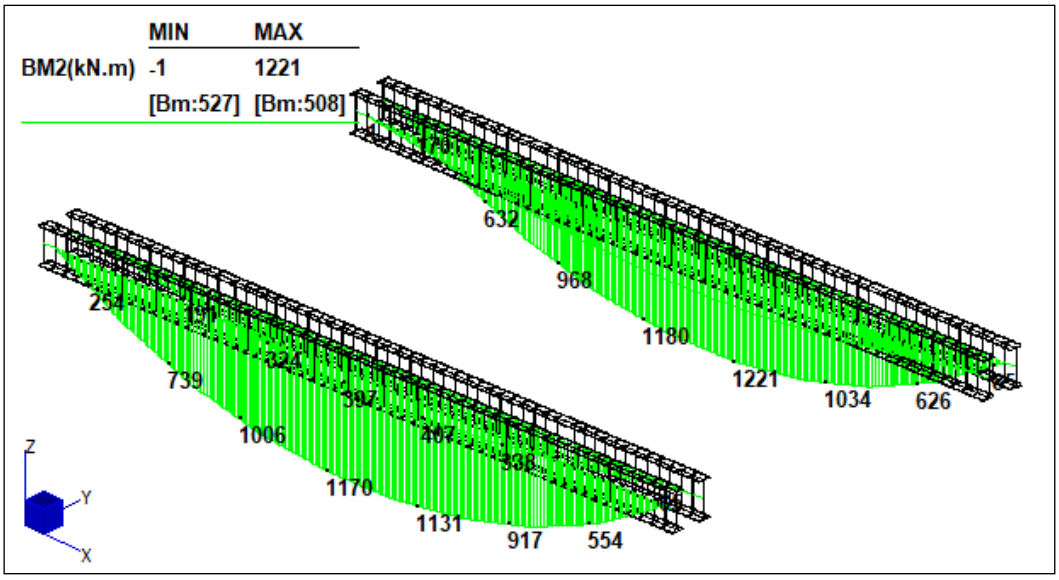

Figura 10-7: *Momento Flettente FASE 3-SLU_39*

Gli effetti della viscosità sono stati tenuti in conto nell'analisi sezionale riducendo il modulo elastico del calcestruzzo. A tempo infinito il coefficiente di viscosità è stato calcolato in funzione dei seguenti parametri:

- Dimensione fittizia $h_0 = 2A_c/u = 2x1.7x0.15/1.7 = 0.3$ m (Ac= area soletta; u=perimetro esposto all'aria, in questo caso è assunto pari a alla larghezza della soletta)
- Umidità relativa del 75%,
- Tempo di messa in carico t_0 = 30 gg,

Secondo la tabella 11.2.VI delle NTC, essendo h_0=300 mm risulta $\Phi(\infty,t_0) \approx 1.7$, il modulo del calcestruzzo a lungo termine risulta quindi $E_{c,\infty} = E_{cm}/(1+\Phi) = 12350$ MPa.

Pertanto, i coefficienti di omogeneizzazione risultano:

- Coeff. Di Omogeneizzazione a breve termine $n_{ST}=E_a / Ecm = 6.18$
- Coeff. Di Omogeneizzazione a lungo termine $n_{LT}=E_a / Ecm (1+ \Phi) = 16.68$

Segue quindi l'analisi sezionale della sezione mista acciaio-calcestruzzo.

TRAVE ACCIAIO-CLS: ANALISI SEZIONALE MEZZERIA

DATI DI INPUT

CARATTERISTICHE DEI MATERIALI

Caratteristiche Calcestruzzo

Resistenza cilindrica caratteristica a compressione	f_{ck} [Mpa]	32.00
Coefficiente parziale di sicurezza	γ_c	1.50
Resistenza di progetto a compressione	f_{cd} [Mpa]	18.13

Caratteristiche meccaniche soletta per il calcolo della sezione composta a M+

Modulo elastico del calcestruzzo a breve termine	E_c [Mpa]	33 346
Coefficiente di viscosità a lungo termine	ϕ	1.70

Caratteristiche meccaniche soletta per il calcolo della sezione composta a M-

Modulo elastico effettivo soletta fessurata	$E_{c,eff}$ [Mpa]	10 000

Caratteristiche Acciaio Barre di Armatura

Resistenza caratteristica a snervamento	f_{sk} [Mpa]	450
Coefficiente parziale di sicurezza	γ_S	1.15
Resistenza di progetto a snervamento	f_{sd} [Mpa]	391.3

Caratteristiche Acciaio da carpenteria metallica

Modulo elastico acciaio	E_a [Mpa]	206 000
Resistenza caratteristica di snervamento	f_{yk} [Mpa]	275
Coefficiente parziale di sicurezza	γ_{M0}	1.05
Resistenza di progetto a snervamento	f_{yd} [Mpa]	261.9

SOLLECITAZIONI DI PROGETTO

CONDIZIONE DI CARICO ELEMENTARI	*Taglio* V_{Sd} [kN]	*Momento* M_{Sd} [kNm]	*Sforzo Assiale* N_{Sd} [kN]	*Torsione* T_{Sd} [kNm]
G1	0	2 130	0	0
G2	0	1 377	0	0
Qk	0	1 221	0	0

CARATTERISTICHE GEOMETRICHE

Geometria della soletta in Calcestruzzo

Larghezza collaborante	$b_{c,eff}$ [mm]	800
Spessore soletta	h_c [mm]	150
Spessore non collaborante	h_p [mm]	0

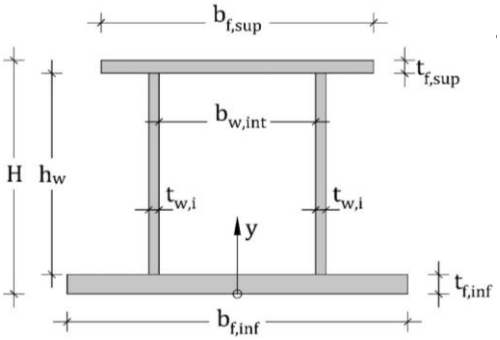

Geometria della sezione in Acciaio

Altezza totale	H [mm]	1 400
Larghezza flangia superiore	$b_{f,sup}$ [mm]	500
Spessore flangia superiore	$t_{f,sup}$ [mm]	40.0
Spessore anime	$t_{w,i}$ [mm]	20.0
Numero anime	n_w [-]	1
Distanza interna tra le anime	$b_{w,int}$ [mm]	0
Spessore totale anime	$t_{w,tot}$ [mm]	20
Alltezza piatti anime	h_w [mm]	1 320
Larghezza flangia inferiore	$b_{f,inf}$ [mm]	500.0
Spessore flangia inferiore	$t_{f,inf}$ [mm]	40.0

OUTPUT: VERIFICA TENSIONALE SEZIONE SOGGETTA A MOMENTO POSITIVO

		TENSIONI TANGENZIALI τ SULLE COMPONENTI DELLA SEZIONE DI ACCIAIO			
		Flangia inf	*Anima*		*Flangia Sup*
SEZIONE RESISTENTE	CONDIZIONE DI CARICO	$\tau_{a,inf}$	$\tau_{a,anima}$ (V_{sd})	$\tau_{a,anima}$ (T_{sd})	$\tau_{a,sup}$
		Mpa	Mpa	Mpa	Mpa
Acciaio	G1+G2+Qk	0	0	0	0

		TENSIONI NORMALI σ SULLE COMPONENTI DELLA SEZIONE DI ACCIAIO				TENSIONI NORMALI σ SUL CALCESTRUZZO	
		Flangia inf	*Anima*		*Flangia Sup*	*Soletta*	
SEZIONE RESISTENTE	CONDIZIONE DI CARICO	$\sigma_{a,inf}$	$\sigma_{a,inf,anima}$	$\sigma_{a,sup,anima}$	$\sigma_{a,sup}$	$\sigma_{c,inf}$	$\sigma_{c,sup}$
		Mpa	Mpa	Mpa	Mpa	Mpa	Mpa
Acciaio	G1	67	63	-63	-67	-	-
Acciaio-Cls a lungo termine	G2	41	39	-31	-33	-2.0	-2.4
Acciaio-Cls a breve termine	G2	38	37	-21	-23	-3.7	-4.8
Acciaio-Cls a breve termine	Qk	34	32	-19	-20	-3.3	-4.2

	TENSIONI IDEALI (CRITERIO DI VON MISES) SULLE COMPONENTI DELLA SEZIONE DI ACCIAIO				TENSIONI NORMALI σ SUL CALCESTRUZZO	
	Flangia inf	*Anima*		*Flangia Sup*	*Soletta*	
	$\sigma_{a,inf}$	$\sigma_{id,a,inf,anima}$	$\sigma_{id,a,sup,anima}$	$\sigma_{a,sup}$	$\sigma_{c,inf}$	$\sigma_{c,sup}$
	Mpa	Mpa	Mpa	Mpa	Mpa	Mpa
Tensioni totali a lungo termine	141	134	-112	-120	-5.27	-6.68
Tensioni totali a breve termine	139	132	-103	-110	-7.03	-9.04
TASSO DI LAVORO %	**54%**	**51%**	**43%**	**46%**	**29%**	**37%**

La resistenza di calcolo a taglio $V_{c,Rd}$ vale:

$V_{c,Rd} = (A_v \cdot f_{yk}) / (3^{0.5} \cdot \gamma_{M0}) = 19200 \cdot 275 / (3^{0.5} \cdot 1.05) = 2903.25kN$

$A_v = A - 2 \cdot b \cdot t_f + (t_w + 2r) \cdot t_f = 58400 - 2 \cdot 500 \cdot 40 + (20 + 2 \cdot 0) \cdot 40 = 19200\ mm^2$

dove:

A area lorda della sezione del profilo;

b larghezza delle ali;

r raggio di raccordo tra anima ed ala;

t_f spessore delle ali;

t_w spessore dell'anima.

Pertanto, il valore di calcolo dell'azione tagliante V_{Ed}, pari 695 kN, rispetta la condizione $V_{Ed} < V_{c,Rd}$.

Segue infine il calcolo dei pioli.

VERIFICA DEI PIOLI CONNETTORI

INPUT

CARATTERISTICHE DEI MATERIALI

Caratteristiche Calcestruzzo

Resistenza cilindrica caratteristica a compressione	f_{ck} [Mpa]	32.0
Resistenza di progetto a compressione	f_{cd} [Mpa]	18.1
Modulo elastico del calcestruzzo a breve termine	E_{cm} [Mpa]	33 346

Caratteristiche Acciaio pioli

Resistenza a rottura per trazione	f_t [Mpa]	450

Caratteristiche Acciaio trave

Resistenza di progetto a snervamento	f_{sd} [Mpa]	262

CARATTERISTICHE GEOMETRICHE

Geometria della trave

Luce della trave	L_{trave} [mm]	27 000
Area soletta	A_c [mm^2]	1.20E+05
Area acciaio	A_a [mm^2]	6.64E+04
Area omogeneizzata a lungo termine	$A_{eq,LT}$ [mm^2]	7.36E+04
Area omogeneizzata a breve termine	$A_{eq,ST}$ [mm^2]	8.58E+04
Momento statico acciaio a lungo termine	$S_{a,LT}$ [mm^3]	5.03E+06
Momento statico acciaio a breve termine	$S_{a,ST}$ [mm^3]	1.16E+07
Inerzia omogeneizzata a lungo termine	$I_{eq,LT}$ [mm^4]	2.62E+10
Inerzia omogeneizzata a breve termine	$I_{eq,ST}$ [mm^4]	3.14E+10

Geometria della piolatura

Diametro del piolo	d [mm]	16
Altezza del piolo	h_{sc} [mm]	100
Interasse longitudinale	s_L [mm]	200
Numero pioli per fila	$n_{P,fila}$ [-]	2

SOLLECITAZIONI DI PROGETTO

Sollecitazioni da carichi verticali

Taglio per carichi G2	$V_{Sd,G2}$ [kN]	218
Taglio per carichi Qk	$V_{Sd,Qk}$ [kN]	180

OUTPUT

CARATTERISTICHE GEOMETRICHE

Limitazioni geometriche per la disposizione dei pioli

Altezza minima del piolo	$h_{sc\,min}$ [mm]	48.00
Altezza minima del piolo duttile	$h_{sc\,du\,min}$ [mm]	64.00
Interasse longitudinale minimo	$s_{L\,min}$ [mm]	80.00
Interasse trasversale minimo in solette piene	$s_{T\,min}$ [mm]	40.00
Interasse trasversale minimo in solette con lamiera grecata	$s_{T\,min}$ [mm]	64.00
Spessore minimo flangia superiore della trave	$t_{f\,min}$ [mm]	8.00

Classificazione del comportamento inlastico dei pioli

DUTTILE

CALCOLO ELASTICO DEL TAGLIO AGENTE SUI PIOLI

Sforzi di scorrimento

Sforzo di scorrimento unitario da carichi verticali G2	q_{G2} [kN/m]	81
Sforzo di scorrimento unitario da carichi verticali Qk	q_{Qk} [kN/m]	67
Sforzo di scorrimento di progetto	q_{Sd} [kN/m]	148

Forza di progetto

Forza di taglio agente sul piolo singolo	P_{Sd} [kN]	14.8

RESISTENZA DEI PIOLI

Analisi dei meccanismi di rottura

Coefficiente riduttivo funzione dell'altezza del piolo	α	1.00
Resistenza per rottura del gambo	$P_{Rd,a}$ [kN]	57.9
Resistenza per rottura del calcestruzzo	$P_{Rd,c}$ [kN]	61.4
Coefficiente di penalizzazione per effetti dinamici	k_d	1.00
Coefficiente riduttivo in presenza di lamiera grecata	k_l	1.00
Coefficiente riduttivo in zona tesa fessurata	β	1.00

Verifica di resistenza

Resistenza di progetto del piolo	P_{Rd} [kN]	57.88
Coefficiente di sicurezza	P_{Rd}/P_{Sd}	3.92

Si riporta infine la verifica della sezione con ala superiore ridotta per via dell'interferenza con il palo della T.E. La sezione si trova a 2 metri dall'asse appoggi.

TRAVE ACCIAIO-CLS: ANALISI SEZIONALE SEZ. RIDOTTA

DATI DI INPUT

CARATTERISTICHE DEI MATERIALI

Caratteristiche Calcestruzzo

Resistenza cilindrica caratteristica a compressione	f_{ck} [Mpa]	32.00
Coefficiente parziale di sicurezza	γ_c	1.50
Resistenza di progetto a compressione	f_{cd} [Mpa]	18.13

Caratteristiche meccaniche soletta per il calcolo della sezione composta a M+

Modulo elastico del calcestruzzo a breve termine	E_c [Mpa]	33 346
Coefficiente di viscosità a lungo termine	ϕ	1.70

Caratteristiche meccaniche soletta per il calcolo della sezione composta a M-

Modulo elastico effettivo soletta fessurata	$E_{c,eff}$ [Mpa]	10 000

Caratteristiche Acciaio Barre di Armatura

Resistenza caratteristica a snervamento	f_{sk} [Mpa]	450
Coefficiente parziale di sicurezza	γ_S	1.15
Resistenza di progetto a snervamento	f_{sd} [Mpa]	391.3

Caratteristiche Acciaio da carpenteria metallica

Modulo elastico acciaio	E_a [Mpa]	206 000
Resistenza caratteristica di snervamento	f_{yk} [Mpa]	275
Coefficiente parziale di sicurezza	γ_{M0}	1.05
Resistenza di progetto a snervamento	f_{yd} [Mpa]	261.9

SOLLECITAZIONI DI PROGETTO

CONDIZIONE DI CARICO ELEMENTARI	*Taglio* V_{Sd} [kN]	*Momento* M_{Sd} [kNm]	*Sforzo Assiale* N_{Sd} [kN]	*Torsione* T_{Sd} [kNm]
G1	0	589	0	0
G2	0	395	0	0
Qk	0	340	0	0

CARATTERISTICHE GEOMETRICHE

Geometria della soletta in Calcestruzzo

Larghezza collaborante	$b_{c,eff}$ [mm]	550
Spessore soletta	h_c [mm]	150
Spessore non collaborante	h_p [mm]	0

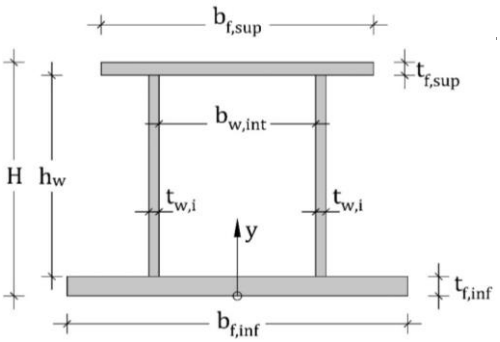

Geometria della sezione in Acciaio

Altezza totale	H [mm]	1 400
Larghezza flangia superiore	$b_{f,sup}$ [mm]	300
Spessore flangia superiore	$t_{f,sup}$ [mm]	40.0
Spessore anime	$t_{w,i}$ [mm]	20.0
Numero anime	n_w [-]	1
Distanza interna tra le anime	$b_{w,int}$ [mm]	0
Spessore totale anime	$t_{w,tot}$ [mm]	20
Alltezza piatti anime	h_w [mm]	1 320
Larghezza flangia inferiore	$b_{f,inf}$ [mm]	500.0
Spessore flangia inferiore	$t_{f,inf}$ [mm]	40.0

OUTPUT: VERIFICA TENSIONALE SEZIONE SOGGETTA A MOMENTO POSITIVO

		TENSIONI TANGENZIALI τ SULLE COMPONENTI DELLA SEZIONE DI ACCIAIO			
		Flangia inf	*Anima*		*Flangia Sup*
SEZIONE RESISTENTE	**CONDIZIONE DI CARICO**	$\tau_{a,inf}$	$\tau_{a,anima}$ (V_{sd})	$\tau_{a,anima}$ (T_{sd})	$\tau_{a,sup}$
		Mpa	Mpa	Mpa	Mpa
Acciaio	G1+G2+Qk	0	0	0	0

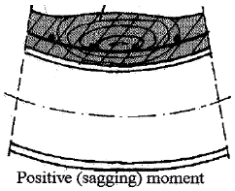

		TENSIONI NORMALI σ SULLE COMPONENTI DELLA SEZIONE DI ACCIAIO				TENSIONI NORMALI σ SUL CALCESTRUZZO	
		Flangia inf	*Anima*		*Flangia Sup*	*Soletta*	
SEZIONE RESISTENTE	**CONDIZIONE DI CARICO**	$\sigma_{a,inf}$	$\sigma_{a,inf,anima}$	$\sigma_{a,sup,anima}$	$\sigma_{a,sup}$	$\sigma_{c,inf}$	$\sigma_{c,sup}$
		Mpa	Mpa	Mpa	Mpa	Mpa	Mpa
Acciaio	G1	20	18	-24	-26	-	-
Acciaio-Cls a lungo termine	G2	12	12	-13	-13	-0.8	-1.0
Acciaio-Cls a breve termine	G2	12	11	-9	-9	-1.5	-1.9
Acciaio-Cls a breve termine	Qk	10	9	-8	-8	-1.3	-1.6

	TENSIONI IDEALI (CRITERIO DI VON MISES) SULLE COMPONENTI DELLA SEZIONE DI ACCIAIO				TENSIONI NORMALI σ SUL CALCESTRUZZO	
	Flangia inf	*Anima*		*Flangia Sup*	*Soletta*	
	$\sigma_{a,inf}$	$\sigma_{id,a,inf,anima}$	$\sigma_{id,a,sup,anima}$	$\sigma_{a,sup}$	$\sigma_{c,inf}$	$\sigma_{c,sup}$
	Mpa	Mpa	Mpa	Mpa	Mpa	Mpa
Tensioni totali a lungo termine	42	39	-45	-47	-2.12	-2.59
Tensioni totali a breve termine	41	39	-41	-43	-2.85	-3.53
TASSO DI LAVORO %	**16%**	**15%**	**17%**	**18%**	**12%**	**14%**

10.2.4 Montante Barriera Antirumore

La sezione trasversale, assunta per il montante della barriera antirumore, come indicato precedentemente, è un profilo HE 360 M. La seguente immagine mostra le tensioni normali sul profilo.

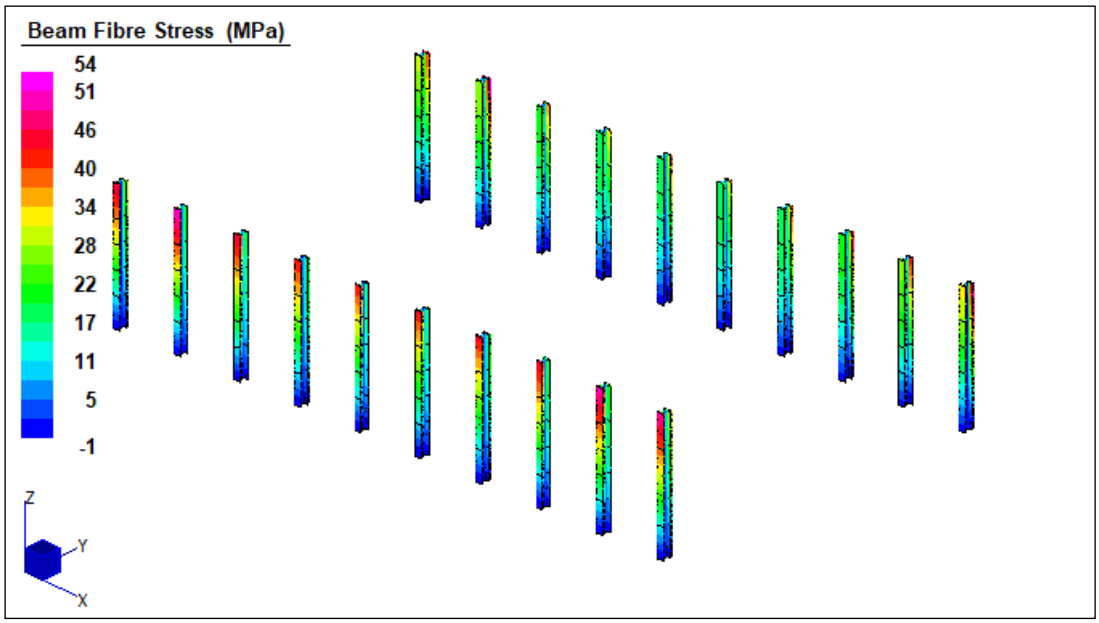

Figura 10-8: *Tensioni elastiche – Inviluppo SLU max*

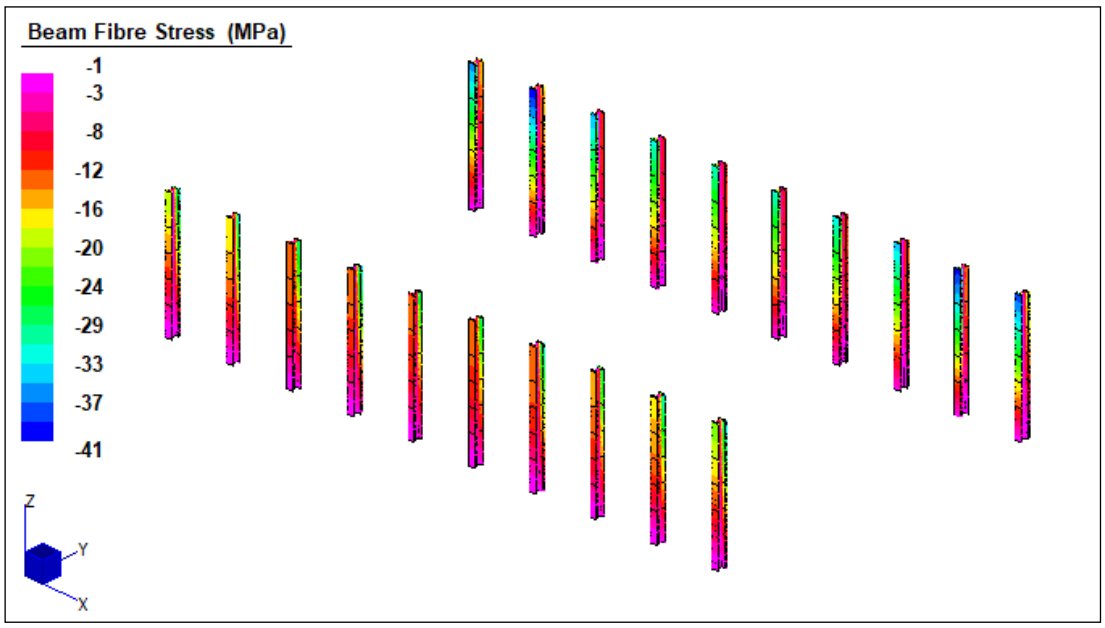

Figura 10-9: *Tensioni elastiche – Inviluppo SLU min*

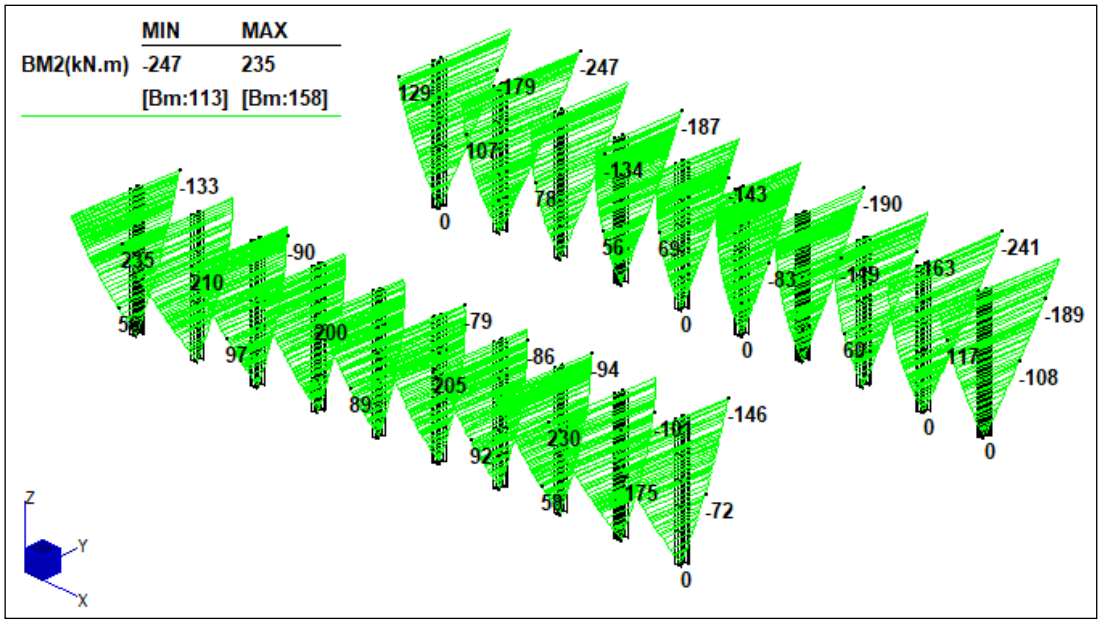

Figura 10-10: *Diagrammi sollecitazione – Inviluppo SLU*

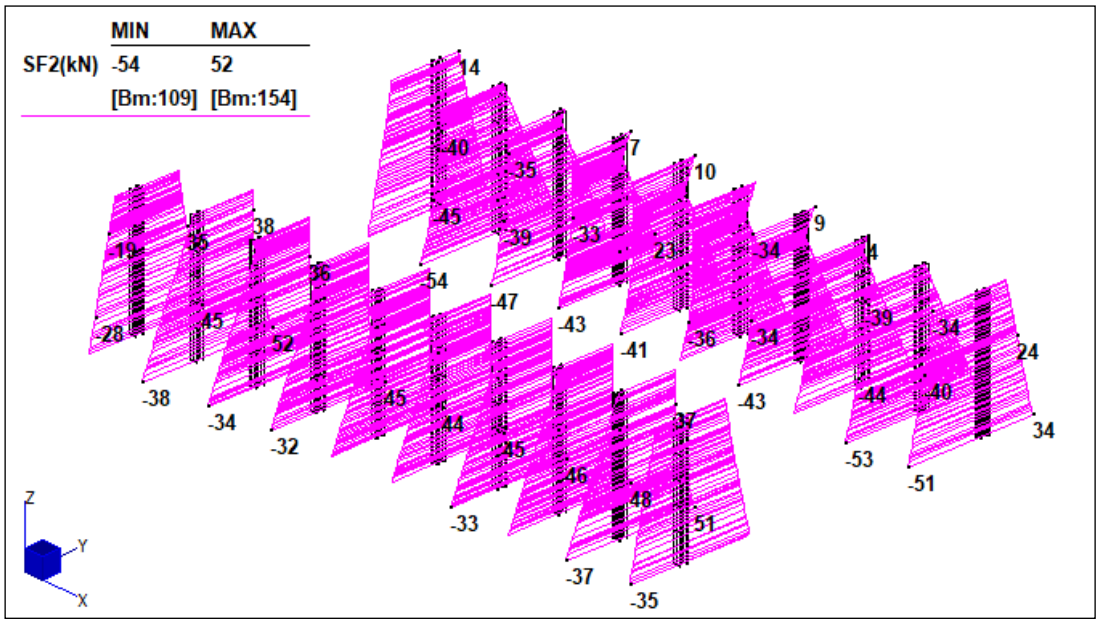

Figura 10-11: *Taglio– Inviluppo SLU*

Si riporta di seguito la verifica di instabilità.

VERIFICA INSTABILITA' MONTANTE

INPUT

GEOMETRICAL AND MECHANICAL PROPERTIES

Material properties			
Nominal yield strength	f_{yk}	275	MPa
Elastic modulus	E_a	206000	MPa
Safety factor	γ_{M0}	1.05	
Safety factor	γ_{M1}	1.10	

Input parameters			
Profile name		HEM360	SINGLE

Geometrical data		HEM360	SINGLE
Weight	p [kg/m]	250.0	
Height	h [mm]	395.0	
Steel area	A_a [cm^2]	318.8	

Flexure about Y-Y axis (strong axis)			
Moment of Inertia	I_{yy}	84870.0	cm^4
Radious of gyration	ρ_{yy}	16.3	cm
Elastic section modulus	$W_{el,yy}$	4297.0	cm^3
Plastic section modulus	$W_{pl,yy}$	4989.0	cm^3

Flexure about Z-Z axis (weak axis)			
Moment of Inertia	I_{zz}	19520.0	cm^4
Radious of gyration	ρ_{zz}	7.8	cm
Elastic section modulus	$W_{el,zz}$	1268.0	cm^3
Plastic section modulus	$W_{pl,zz}$	1942.0	cm^3

Member geometry data		Y-axis	Z-axis
Restraint coefficient	β	2.00	2.00
Length	L [mm]	6400	6400
Imperfection factor	α	0.34	0.49

APPLIED FORCES

Stress resultant		Y-axis	Z-axis
Axial force	N_{Ed} [kN]	132.00	-
Bending moment	M_{Ed} [kNm]	247.00	0.00

OUTPUT

MEMBER RESISTANCE EVALUATION

Buckling resistance parameters		Y-axis	Z-axis
Buckling length	L_0 [mm]	12800	12800
Elastic slenderness	λ_0	78.43	163.47
Elastic buckling force	N_{cr} [kN]	10537	2425
Non-dimensional slenderne	λ'	0.912	1.901
Buckling coefficient	Φ	1.04	2.72
Buckling coefficient	χ	0.65	0.21

Buckling resistance parameters - Angle			
Slenderness total member	λ	78.43	0.00
Local slenderness between paddings	λ_1	0.00	48.68
Equivalent slenderness	λ_{eq}	78.43	48.68

Critical resistance		Y-axis	Z-axis
Buckling resistance	$N_{B,Rd}$ [kN]	5207.25	1705
Utilization coefficient	$N_{Ed}/N_{B,Rd}$	0.025	0.077
Buckling stress	σ_{cr} [MPa]	163	53

Flexural buckling interaction coefficients		Y-axis	Z-axis
Moment distribution coefficients	ψ_y-ψ_z	0.00	0.00
Equivalent moment coefficients	α_{my} - α_{my}	0.60	1.00
Interaction coefficients	k_{yy} - k_{zz}	0.611	1.062
Interaction coefficients	k_{yz} - k_{zy}	0.637	0.000

Plastic resistance of cross-section		Y-axis	Z-axis
Axial strength	$N_{pl,Rd}$ [kN]	8349.52	8349.52
Flexural strength	$M_{pl,Rd}$ [kNm]	1306.64	508.62

Elastic stress	$\sigma_{N,Ed}$ [MPa]	$\sigma_{My,Ed}$ [MPa]	$\sigma_{Mz,Ed}$ [MPa]
Partial stress	4.1	57.5	0.0
Total stress		61.6	

CROSS-SECTION UTILIZATION FACTOR

Utilization coefficients for flexure		Y-axis	Z-axis
Bending moment about y-y axis	$k M_{y,Ed}/M_{pl,y,Rd}$	0.12	0.00
Bending moment about z-z axis	$k M_{z,Ed}/M_{pl,z,Rd}$	0.00	0.00

Final verification for combined axial force-flexure	Y-axis	Z-axis
Utilization coefficients	0.141	0.077
Safety margin	7.10	12.92

Dalla figura, in cui è mostrato il diagramma di inviluppo dello sforzo di taglio allo Stato Limite Ultimo, si evince che esso è pari a 54 kN.

La resistenza di calcolo a taglio $V_{c,Rd}$ vale:

$V_{c,Rd} = (A_v \cdot f_{yk}) / (3^{\wedge 0.5} \cdot \gamma_{M0}) = 10240 \cdot 275 / (3^{\wedge 0.5} \cdot 1.05) = 1548.40kN$

$A_v = A – 2 \cdot b \cdot t_f + (t_w + 2r) \cdot t_f = 31880 – 2 \cdot 308 \cdot 40 + (21 + 2 \cdot 27) \cdot 40 = 10240\ mm^2$

dove:

A area lorda della sezione del profilo;

b larghezza delle ali;

r raggio di raccordo tra anima ed ala;

t_f spessore delle ali;

t_w spessore dell'anima.

Pertanto, il valore di calcolo dell'azione tagliante V_{Ed}, rispetta la condizione $V_{Ed} < V_{c,Rd}$.

10.2.5 Trave di copertura Barriera Antirumore

La sezione trasversale, assunta per le travi di copertura della barriera antirumore, come indicato precedentemente, è un profilo HE 360 B. La seguente immagine mostra le tensioni normali sul profilo.

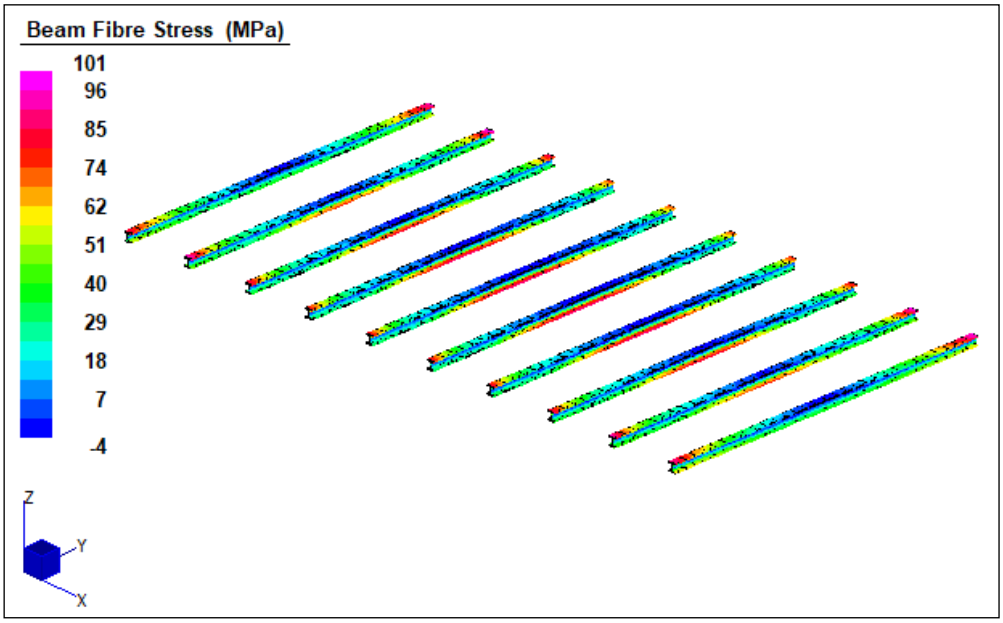

Figura 10-12: *Tensioni elastiche – Inviluppo SLU max*

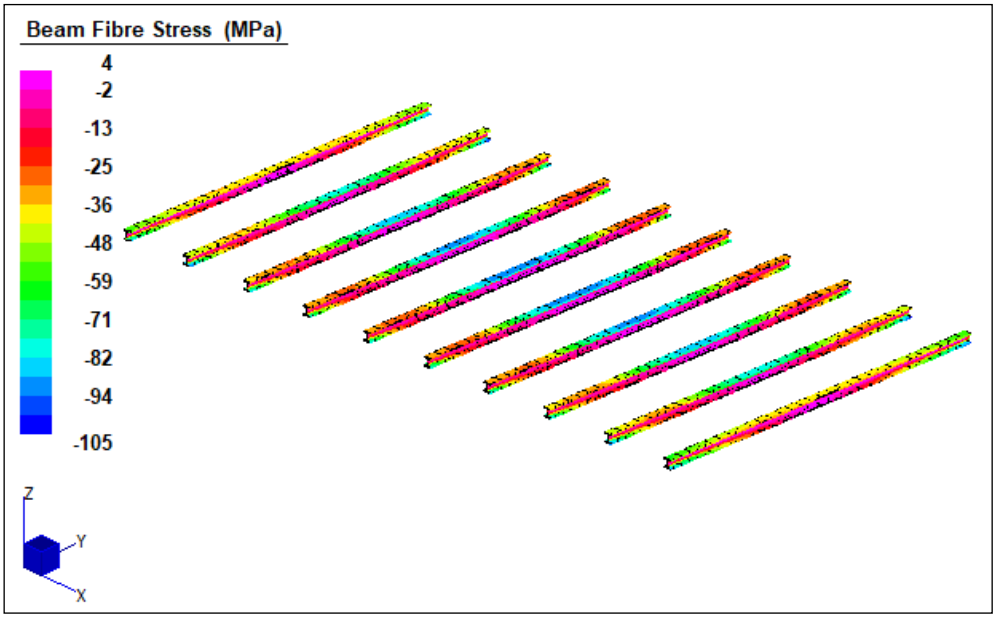

Figura 10-13: *Tensioni elastiche – Inviluppo SLU min*

La verifica di resistenza risulta soddisfatta essendo $\sigma_{max} < f_d$.

Dalla figura seguente, in cui è mostrato il diagramma di inviluppo dello sforzo di taglio allo Stato Limite Ultimo, si evince che esso è pari a 108 kN.

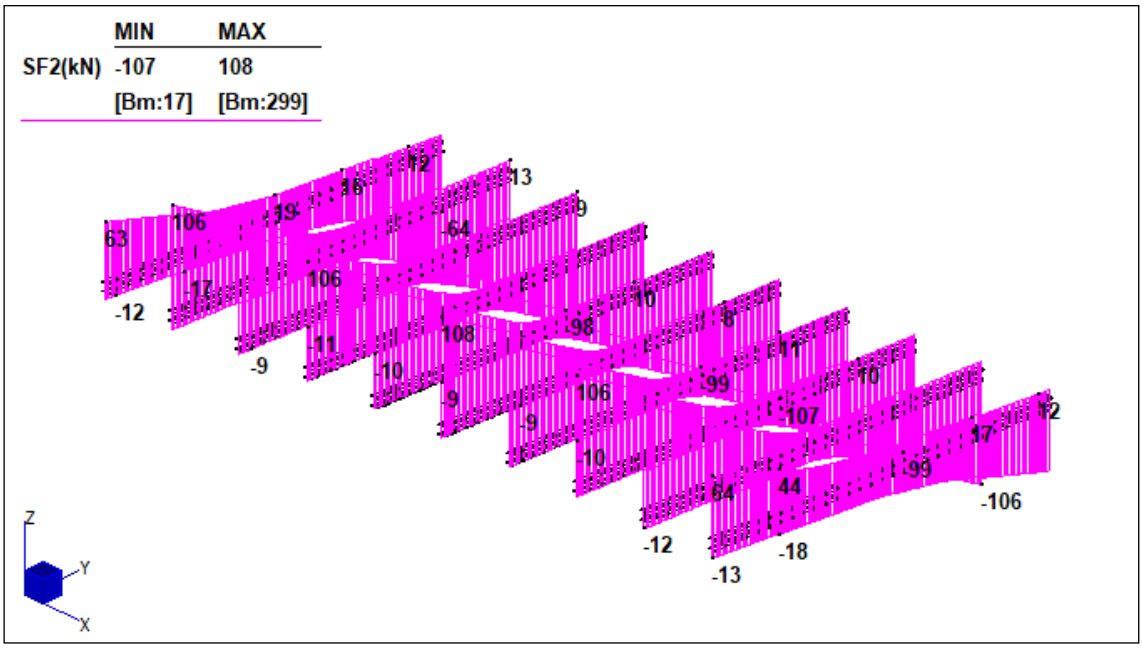

Figura 10-14: *Taglio– Inviluppo SLU*

La resistenza di calcolo a taglio $V_{c,Rd}$ vale:

$V_{c,Rd} = (A_v \cdot f_{yk}) / (3^{\wedge 0.5} \cdot \gamma_{M0}) = 6056 \cdot 275 / (3^{\wedge 0.5} \cdot 1.05) = 915.77$ kN

$A_v = A - 2 \cdot b \cdot t_f + (t_w + 2r) \cdot t_f = 18060 - 2 \cdot 300 \cdot 22.5 + (12.5 + 2 \cdot 27) \cdot 22.5 = 6056$ mm^2

dove:

A area lorda della sezione del profilo;

b larghezza delle ali;

r raggio di raccordo tra anima ed ala;

t_f spessore delle ali;

t_w spessore dell'anima.

Pertanto, il valore di calcolo dell'azione tagliante V_{Ed}, rispetta la condizione $V_{Ed} < V_{c,Rd}$.

10.2.6 Controvento longitudinale di piano

La sezione trasversale, assunta il controvento longitudinale superiore della barriera antirumore, come indicato precedentemente, è un profilo UPN 300. Esso risulta principalmente teso e compresso essendo il corrente della reticolare di piano creatasi grazie ai diagonali a croce. Segue il diagramma dello sforzo normale.

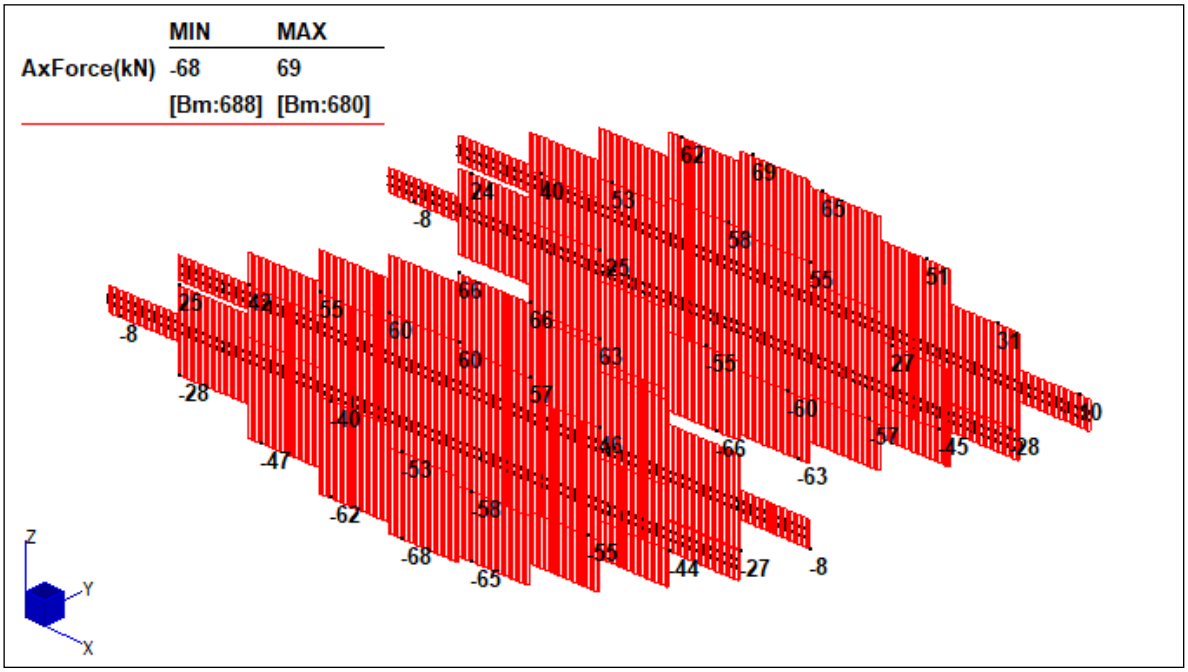

Figura 10-15: *Sforzo assiale– Inviluppo SLU*

Si riporta di seguito la verifica di instabilità.

VERIFICA INSTABILITA' CONTROVENTO DI PIANO LONGITUDINALE

INPUT

GEOMETRICAL AND MECHANICAL PROPERTIES

Material properties			
Nominal yield strength	f_{yk}	275	MPa
Elastic modulus	E_a	206000	MPa
Safety factor	γ_{M0}	1.05	
Safety factor	γ_{M1}	1.10	

Input parameters		
Profile name	UPN300	SINGLE

Geometrical data		UPN300	SINGLE
Weight	p [kg/m]	46.2	
Height	h [mm]	300.0	
Steel area	A_a [cm^2]	58.8	

Flexure about Y-Y axis (strong axis)			
Moment of Inertia	I_{yy}	8030.0	cm^4
Radious of gyration	ρ_{yy}	11.7	cm
Elastic section modulus	$W_{el,yy}$	535.0	cm^3
Plastic section modulus	$W_{pl,yy}$	632.0	cm^3

Flexure about Z-Z axis (weak axis)			
Moment of Inertia	I_{zz}	495.0	cm^4
Radious of gyration	ρ_{zz}	2.9	cm
Elastic section modulus	$W_{el,zz}$	67.8	cm^3
Plastic section modulus	$W_{pl,zz}$	130.0	cm^3

Member geometry data		Y-axis	Z-axis
Restraint coefficient	β	1.00	1.00
Length	L [mm]	3000	3000
Imperfection factor	α	0.49	0.49

APPLIED FORCES

Stress resultant		Y-axis	Z-axis
Axial force	N_{Ed} [kN]	70.00	-
Bending moment	M_{Ed} [kNm]	0.00	0.00

OUTPUT

MEMBER RESISTANCE EVALUATION

Buckling resistance parameters		Y-axis	Z-axis
Buckling length	L_0 [mm]	3000	3000
Elastic slenderness	λ_0	25.64	103.45
Elastic buckling force	N_{cr} [kN]	18183	1117
Non-dimensional slenderne	λ'	0.298	1.203
Buckling coefficient	Φ	0.57	1.47
Buckling coefficient	χ	0.95	0.43

Buckling resistance parameters - Angle			
Slenderness total member	λ	25.64	0.00
Local slenderness between paddings	λ_1	0.00	48.68
Equivalent slenderness	λ_{eq}	25.64	48.68

Critical resistance		Y-axis	Z-axis
Buckling resistance	$N_{B,Rd}$ [kN]	1396.59	635
Utilization coefficient	$N_{Ed}/N_{B,Rd}$	0.050	0.110
Buckling stress	σ_{cr} [MPa]	238	108

Flexural buckling interaction coefficients		Y-axis	Z-axis
Moment distribution coefficients	ψ_y-ψ_z	0.00	0.00
Equivalent moment coefficients	α_{my} - α_{my}	1.00	1.00
Interaction coefficients	k_{yy} - k_{zz}	1.005	1.088
Interaction coefficients	k_{yz} - k_{zy}	0.000	0.000

Plastic resistance of cross-section		Y-axis	Z-axis
Axial strength	$N_{pl,Rd}$ [kN]	1540.00	1540.00
Flexural strength	$M_{pl,Rd}$ [kNm]	165.52	34.05

Elastic stress	$\sigma_{N,Ed}$ [MPa]	$\sigma_{My,Ed}$ [MPa]	$\sigma_{Mz,Ed}$ [MPa]
Partial stress	11.9	0.0	0.0
Total stress		11.9	

CROSS-SECTION UTILIZATION FACTOR

Utilization coefficients for flexure		Y-axis	Z-axis
Bending moment about y-y axis	$k M_{y,Ed}/M_{pl,y,Rd}$	0.00	0.00
Bending moment about z-z axis	$k M_{z,Ed}/M_{pl,z,Rd}$	0.00	0.00

Final verification for combined axial force-flexure	Y-axis	Z-axis
Utilization coefficients	0.050	0.110
Safety margin	19.95	9.08

10.2.7 Controvento diagonale di piano

La sezione trasversale, assunta il controvento diagonale di piano, è un profilo angolare 60x6. Esso risulta principalmente teso e compresso essendo il diagonale della reticolare di piano. Segue il diagramma dello sforzo normale.

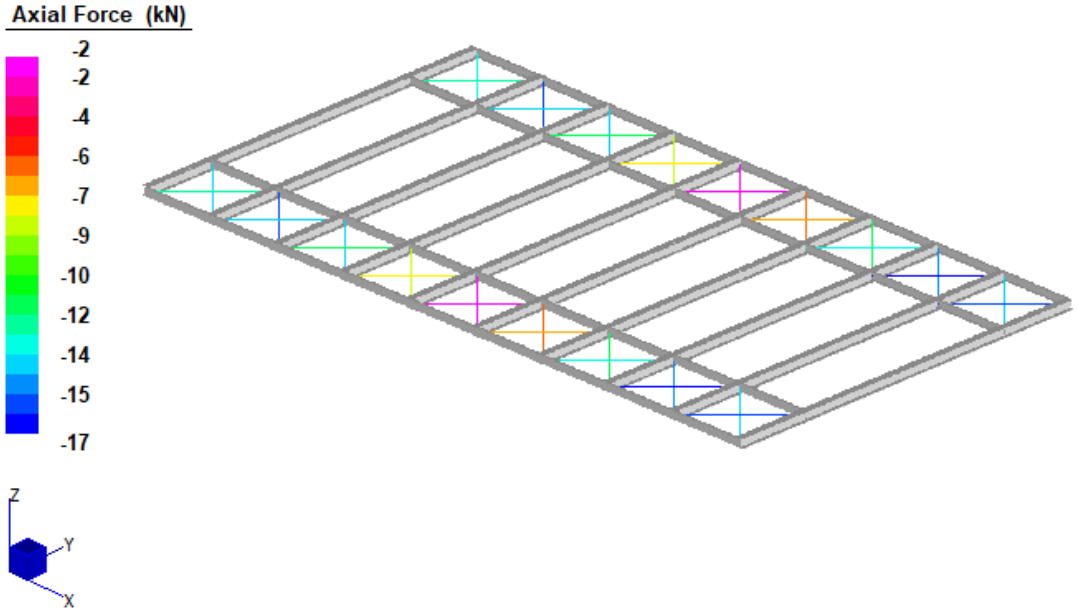

Figura 10-16: *Sforzo assiale– Inviluppo SLU*

Si riporta di seguito la verifica di instabilità.

VERIFICA INSTABILITA' CONTROVENTO DI PIANO DIAGONALE

INPUT

GEOMETRICAL AND MECHANICAL PROPERTIES

Material properties			
Nominal yield strength	f_{vk}	275	MPa
Elastic modulus	E_a	206000	MPa
Safety factor	γ_{M0}	1.05	
Safety factor	γ_{M1}	1.10	

Input parameters			
Profile name		CUSTOM L	SINGLE
Base	B [mm]	60	
Height (Bolted edge)	L [mm]	60	
Thickness	t [mm]	6	

Geometrical data		CUSTOM L	SINGLE
Weight	p [kg/m]	5.4	
Height	h [mm]	60.0	
Steel area	A_a [cm^2]	6.8	

Flexure about Y-Y axis (strong axis)			
Moment of Inertia	I_{yy}	9.5	cm^4
Radious of gyration	ρ_{yy}	1.2	cm
Elastic section modulus	$W_{el,yy}$	2.2	cm^3
Plastic section modulus	$W_{pl,yy}$	2.2	cm^3

Flexure about Z-Z axis (weak axis)			
Moment of Inertia	I_{zz}	23.3	cm^4
Radious of gyration	ρ_{zz}	1.8	cm
Elastic section modulus	$W_{el,zz}$	5.5	cm^3
Plastic section modulus	$W_{pl,zz}$	5.5	cm^3

Member geometry data		Y-axis	Z-axis
Restraint coefficient	β	0.50	1.00
Length	L [mm]	4240	4240
Imperfection factor	α	0.34	0.34

APPLIED FORCES

Stress resultant		Y-axis	Z-axis
Axial force	N_{Ed} [kN]	17.00	-
Bending moment	M_{Ed} [kNm]	0.00	0.00

OUTPUT

MEMBER RESISTANCE EVALUATION

Buckling resistance parameters		Y-axis	Z-axis
Buckling length	L_0 [mm]	2120	4240
Elastic slenderness	λ_0	179.74	229.59
Elastic buckling force	N_{cr} [kN]	43	26
Non-dimensional slenderne	λ'	2.090	2.670
Buckling coefficient	Φ	3.01	4.48
Buckling coefficient	χ	0.19	0.12

Buckling resistance parameters - Angle			
Slenderness total member	λ	179.74	0.00
Local slenderness between paddings	λ_1	0.00	21.66
Equivalent slenderness	λ_{eq}	179.74	21.66

Critical resistance		Y-axis	Z-axis
Buckling resistance	$N_{B,Rd}$ [kN]	33.10	21
Utilization coefficient	$N_{Ed}/N_{B,Rd}$	0.514	0.804
Buckling stress	σ_{cr} [MPa]	48	31

Flexural buckling interaction coefficients		Y-axis	Z-axis
Moment distribution coefficients	ψ_y-ψ_z	0.00	0.00
Equivalent moment coefficients	α_{my} - α_{my}	1.00	1.00
Interaction coefficients	k_{yy} - k_{zz}	1.411	1.643
Interaction coefficients	k_{yz} - k_{zy}	0.000	0.000

Plastic resistance of cross-section		Y-axis	Z-axis
Axial strength	$N_{pl,Rd}$ [kN]	179.14	179.14
Flexural strength	$M_{pl,Rd}$ [kNm]	0.58	1.43

Elastic stress	$\sigma_{N,Ed}$ [MPa]	$\sigma_{My,Ed}$ [MPa]	$\sigma_{Mz,Ed}$ [MPa]
Partial stress	24.9	0.0	0.0
Total stress		24.9	

CROSS-SECTION UTILIZATION FACTOR

Utilization coefficients for flexure		Y-axis	Z-axis
Bending moment about y-y axis	$k M_{y,Ed}/M_{pl,y,Rd}$	0.00	0.00
Bending moment about z-z axis	$k M_{z,Ed}/M_{pl,z,Rd}$	0.00	0.00

Final verification for combined axial force-flexure	Y-axis	Z-axis
Utilization coefficients	0.514	0.804
Safety margin	1.95	1.24

.

10.3 VERFICHE DI DEFORMABILITÀ

10.3.1 Montanti

Le verifiche di deformabilità per i montanti sono state considerate controllando il massimo spostamento orizzontale in testa per combinazioni SLE.

Lo spostamento massimo, in sommità, risulta pari a quanto mostrato nella figura seguente.

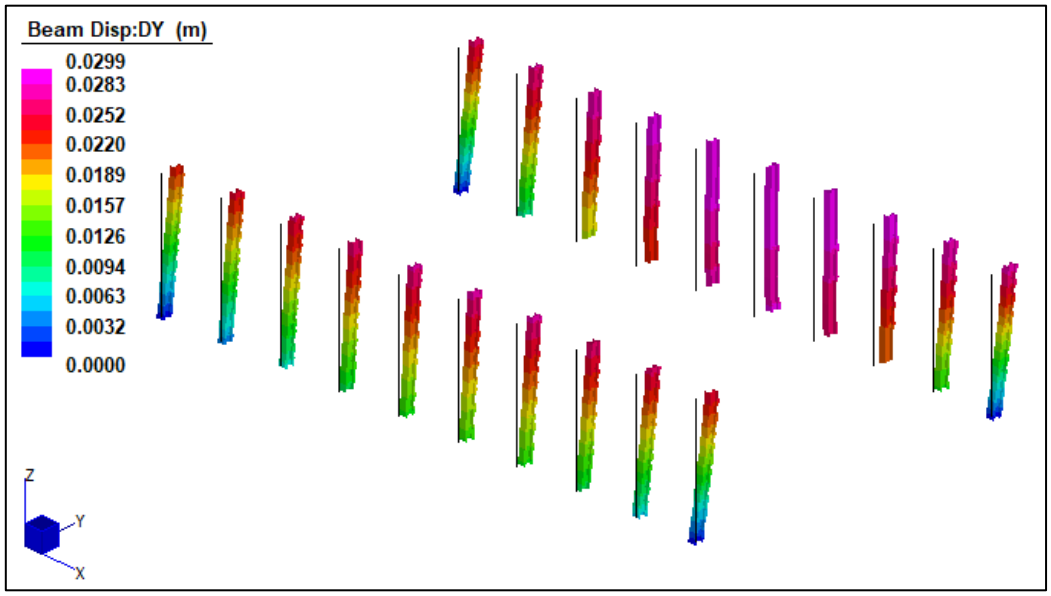

Figura 10-17: *Spostamenti DY – Inviluppo SLE*

Nella tabella seguente si riportano gli spostamenti dei nodi 20 e 51 appartenenti allo stesso montante nella combinazione SLE 94.

Lo spostamento di controllo equivale alla differenza fra i due spostamenti.

	DX (m)	DY (m)	DZ (m)	RX (deg)	RY (deg)	RZ (deg)
Node 20	-0.0005	0.0299	-0.0317	-0.0779	-0.0165	0.0015
Node 51	0.0011	0.0193	-0.0327	-0.6114	-0.0371	-0.0064

Figura 10-18: *Spostamenti Combinazione SLE195*

Lo spostamento relativo risulta pertanto:

δ = 30 – 19 = 11 mm (pari a L/581)

L'altezza del profilo è pari a 6.40m e, considerando il rapporto limite riportato nella normativa vigente al paragrafo 4.2.4.2.2, pari a L/250, si definisce lo spostamento orizzontale assoluto massimo ammissibile uguale a 46.67mm. La verifica risulta soddisfatta.

10.3.2 Travi di copertura

Le verifiche di deformabilità per i traversi sono state considerate controllando il massimo spostamento verticale in mezzeria per combinazioni SLE.

Lo spostamento verticale massimo, in mezzeria, risulta pari a quanto mostrato nella figura seguente.

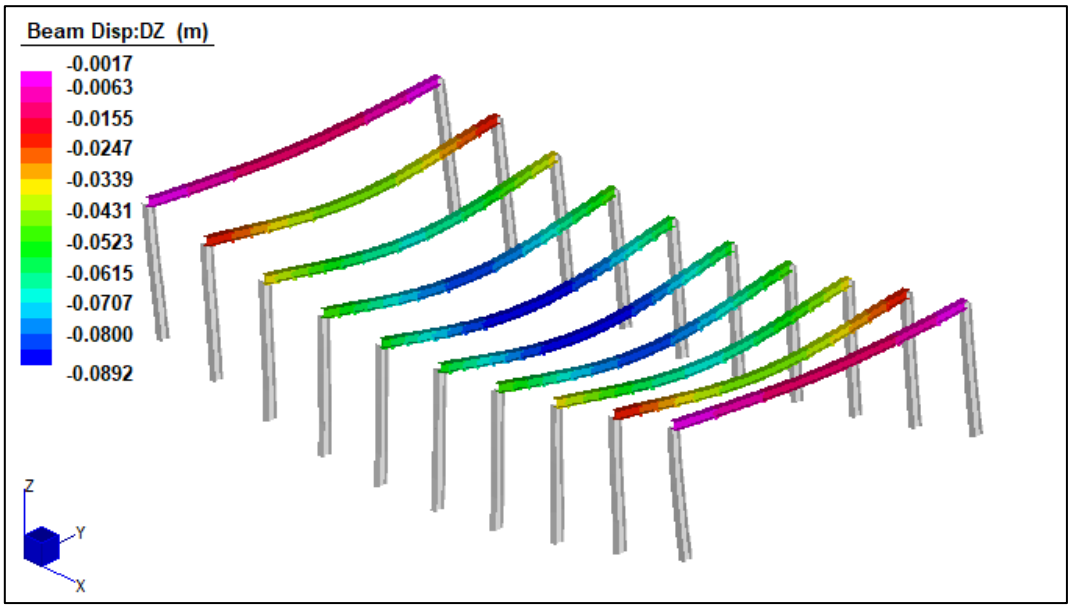

Figura 10-19: *Inviluppo Spostamenti DZ – Combinazione SLE.*

Nella tabella seguente si riportano gli spostamenti dei nodi 222 e 425 appartenenti allo stesso traverso nella combinazione SLE 39.

	DX (m)	DY (m)	DZ (m)	RX (deg)	RY (deg)	RZ (deg)
Node 222	0.0000	-0.0028	-0.0890	-0.0439	0.0203	-0.0032
Node 425	-0.0004	-0.0016	-0.0549	-0.3073	0.0152	-0.0026

Figura 10-20: *Spostamenti Combinazione SLE39.*

Lo spostamento relativo risulta pertanto:

δ = 89-55=34 mm (pari a L/441)

La lunghezza di calcolo del traverso è pari a 15.00m e, considerando il rapporto limite riportato nella normativa vigente al paragrafo 4.2.4.2.2, pari a L/250, si definisce lo spostamento verticale massimo ammissibile uguale a 60mm. La verifica risulta soddisfatta.

10.3.3 Travi principali

Relativamente alle travi principali si sono ottenute le frecce sovrapponendo gli effetti delle 3 fasi di carico descritte al §10.2.3. Sono stati create 3 versioni del modello FEM in cui si sono modificate le proprietà inerziali della trave metallica.

La seguente tabella mostra il calcolo delle caratteristiche geometrico meccaniche della sezione mista implementate nel modello.

TRAVE ACCIAIO-CLS: ANALISI SEZIONALE

PROCESSING: CARATTERISTICHE INERZIALI DELLA SEZIONE

Caratteristiche piatti componenti la sezione in Acciaio

Dimensioni [cm]		$A_{a,i}$ [cm^2]	$y_{G\,a,i}$ [cm]	I_{ai} [cm^4]	J_{Ti} [cm^4]
50.0	4.0	200.0	2.0	266.7	1066.7
132.0	2.0	264.0	70.0	383328.0	352.0
50.0	4.0	200.0	138.0	266.7	1066.7

Classificazione della sezione

ε	0.92

				LIMITI DI SNELLEZZA PER COMPONENTE SOGGETTO A FLESSIONE			LIMITI DI SNELLEZZA PER COMPONENTE SOGGETTO A COMPRESSIONE		
COMPONENTE	c [mm]	t [mm]	c/t	Limite Classe 1	Limite Classe 2	Limite Classe 3	Limite Classe 1	Limite Classe 2	Limite Classe 3
Flangia Sup. sporto	230.0	40	5.8	-	-	-	8.32	9.2	12.9
Anima	1320.0	20	66.0	67	77	115	31	35	39
Flangia Inf. sporto	230.0	40	5.8	-	-	-	8.3	9.2	12.9
Flangia Sup. interna	0.0	40	0.0	67	77	115	31	35	39
Flangia Inf. interna	0.0	40	0.0	67	77	115	31	35	39

Caratteristiche della sezione in Acciaio

H [cm]	A_a [cm^2]	$y_{G\,a}$ [cm]	I_a [cm^4]	$J_{T\,a}$ [cm^4]
140.0	664.0	70.0	2 233 461	2 485

W^+_{el} [cm^3]	W^-_{el} [cm^3]	Ω_a [cm^2]	A_v [cm^2]
31 907	31 907	272	264

Caratteristiche Armatura

A_s [cm^2]	$y_{G\,s}$ [cm]
0.0	#DIV/0!

Caratteristiche soletta in Calcestruzzo

b_{eff} [cm]	h_c [cm]	h_p [cm]	A_c [cm^2]	y_{Gc} [cm]	I_c [cm^4]	J_c [cm^4]
80.0	15.0	0.0	1 200.0	147.5	22 500	90 000

Caratteristiche della sezione composta soggetta a Momento Positivo (asse neutro passante per la sezione in acciaio)

CARICHI DI LUNGA DURATA (LT)						
n_{LT} [-]	$A_{eq,LT}$ [cm^2]	$y^+_{Geq,LT}$ [cm]	$S^+_{a,LT}$ [cm^3]	$I^+_{eq,LT}$ [cm^4]	I^+_{eq}/I_a [%]	J_{eq} [cm^4]
16.68	735.9	77.6	5 031	2 624 679	118%	5 183

CARICHI DI BREVE DURATA (ST)						
n_{ST} [-]	$A_{eq,ST}$ [cm^2]	$y^+_{Geq,ST}$ [cm]	$S^+_{a,ST}$ [cm^3]	$I^+_{eq,ST}$ [cm^4]	I^+_{eq}/I_a [%]	J_{eq} [cm^4]
6.18	858.2	87.5	11 647	3 139 742	141%	9 770

La combinazione che produce la massima freccia è la SLE39.

Seguono i contour delle deforzmazioni verticali ottenute dai tre modelli.

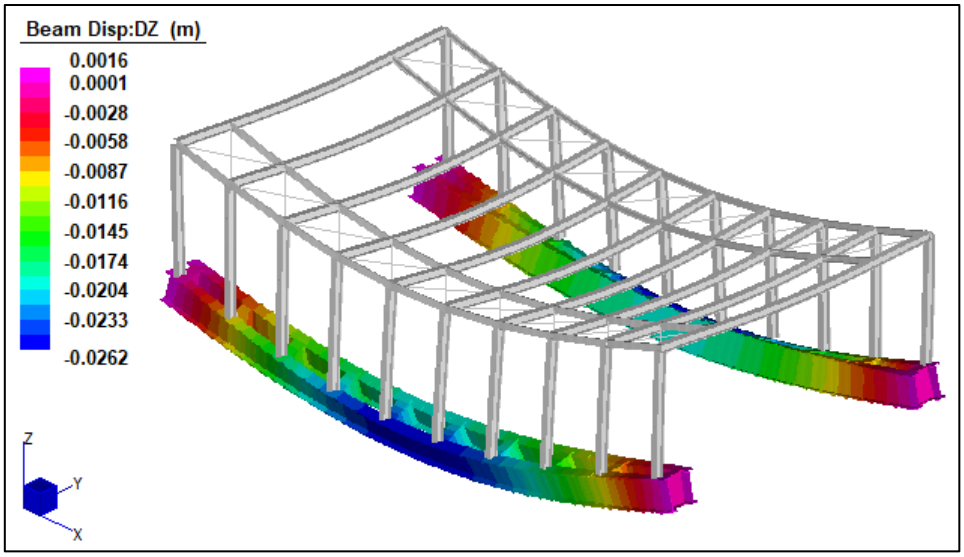

Figura 10-21: *Spostamento verticale travi FASE 1-SLE (Inerzia travi* I_a*)*

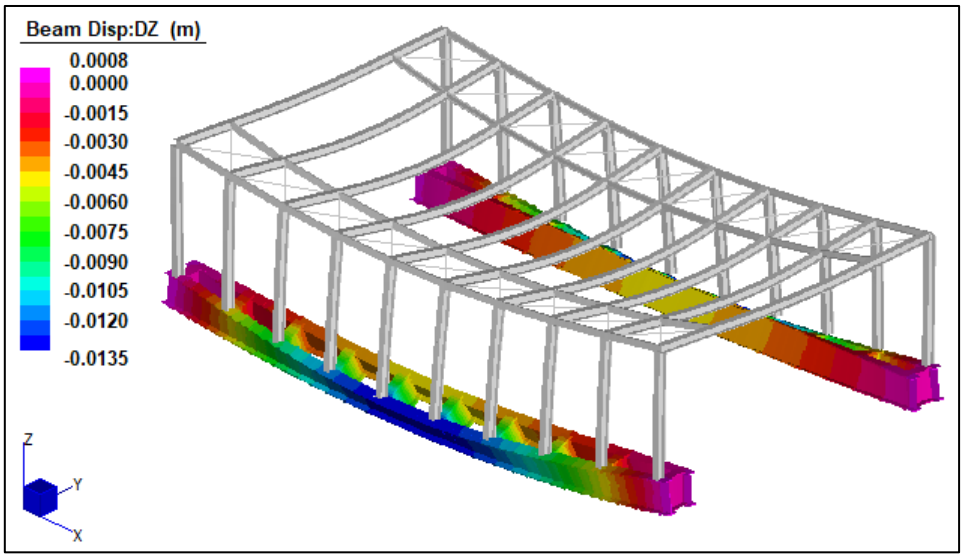

Figura 10-22: *Spostamento verticale travi FASE 2-SLE (Inerzia travi* I_{eqLT}*)*

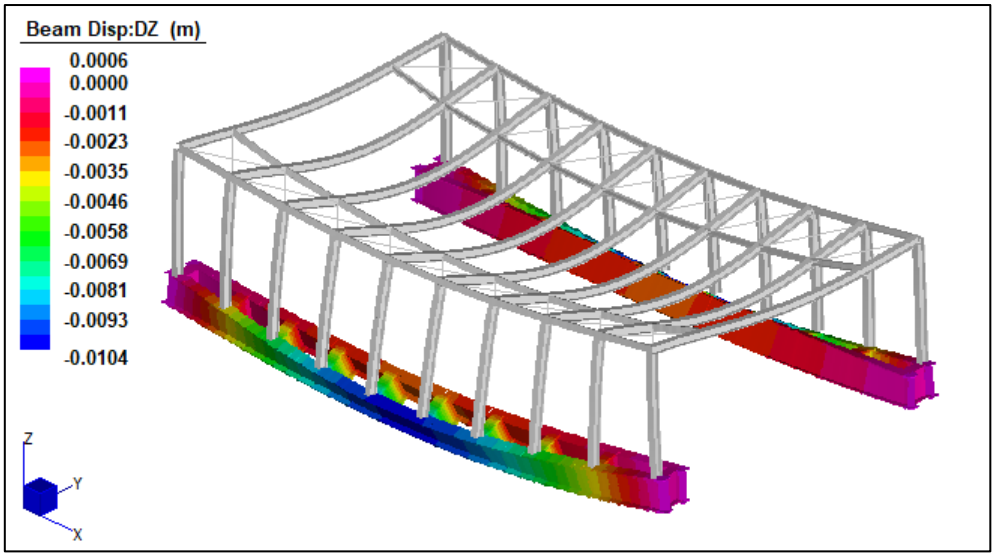

Figura 10-23: *Spostamento verticale travi FASE 3-SLE_39 (Inerzia travi* I_{eqST}*)*

Lo spostamento totale risulta pertanto:

$\delta = 26.2 + 13.5 + 10.4 = 50.1\ (mm)$ (pari a L/539)

La lunghezza di calcolo del traverso è pari a 27.00m e, considerando il rapporto limite pari a L/500, si definisce lo spostamento verticale massimo ammissibile uguale a 54 mm. La verifica risulta soddisfatta.

11. VERIFICHE APPARECCHI DI APPOGGIO E RITEGNI SISMICI

11.1PREMESSA

La seguente figura mostra lo schema appoggi adottato con relativa legenda.

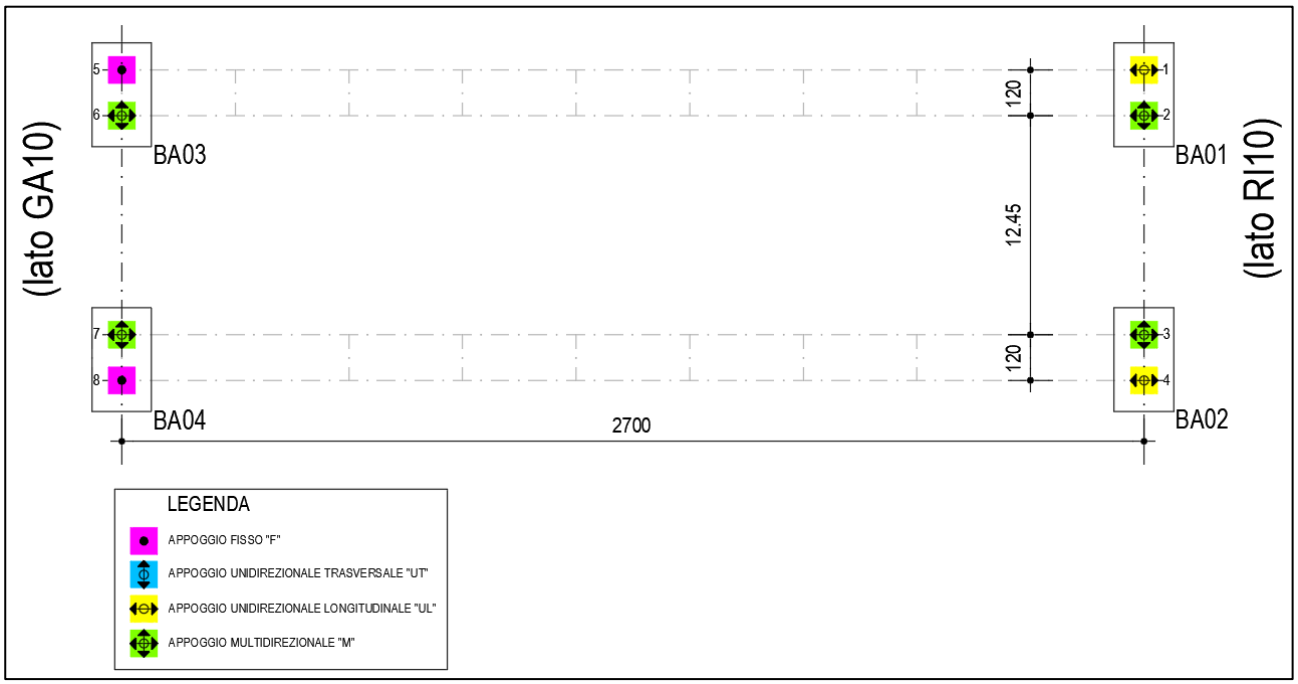

Figura 11-1: *Schema appoggi*

11.2 FORZE SUGLI APPOGGI

Si riportano nel seguito le tabelle con le forze verticali sugli appoggi per le condizioni di carico elementari e le principali combinazioni ottenute dal modello FE R12 leggendo le sollecitazioni all'estremità superiore dei beam baggioli. Si noti che i colori utilizzati nelle tabelle riprendono i colori utilizzati per gli appoggi riportati nello schema alla pagina precedente.

APPOGGIO	CONDIZIONE DI CARICO/COMBINAZIONE	Vx (kN)	Vy (kN)	N (kN)
APPOGGIO 1	1: G00 - Peso Proprio	0	22	-279
	2: G01 - Carico Permanente soletta	0	0	-44
	3: G02a - Carico Pannelli Fonoassorbenti	0	32	-232
	4: G02b - Carico Pannelli Fonoassorbenti DX	0	32	-233
	5: Q00 - Sovraccarico Accidentale	0	1	-83
	6: Q01 - Carico Neve	0	54	-223
	7: Q02a - Carico Vento Y+	0	82	-35
	8: Q02b - Carico Vento Y-	0	-135	252
	9: Q03a - Effetti Aerodinamici Convogli Y+	0	1	77
	10: Q03b - Effetti Aerodinamici Convogli Y-	0	-60	171
	11: T00 - DTu = +25°C	0	3	-4
	12: T01 - DTu = -25°C	0	-3	4
	536: FASE 1 (G1)-SLE [Combination 524]	0	22	-322
	537: FASE 2 (G2)-SLE [Combination 525]	0	32	-232
	538: FASE 3 (Qk)-SLE_39 [Combination 526]	0	52	-220
	539: FASE 1 (G1)-SLU [Combination 527]	0	30	-435
	540: FASE 2 (G2)-SLU [Combination 528]	0	47	-349
	541: FASE 3 (Qk)-SLU_39 [Combination 529]	0	78	-331
	542: SLV-X [Combination 530]	0	59	-604
	543: SLV-Y [Combination 531]	0	172	-740
	544: SLU min [Minimum Envelope 1]	0	-198	-1154
	545: SLU max [Maximum Envelope 2]	0	261	-205
	546: SLE min [Minimum Envelope 3]	0	-131	-801
	547: SLE max [Maximum Envelope 4]	0	177	-164
APPOGGIO 2	1: G00 - Peso Proprio	0	0	-72
	2: G01 - Carico Permanente soletta	0	0	-44
	3: G02a - Carico Pannelli Fonoassorbenti	0	0	37
	4: G02b - Carico Pannelli Fonoassorbenti DX	0	0	38
	5: Q00 - Sovraccarico Accidentale	0	0	-116
	6: Q01 - Carico Neve	0	0	63
	7: Q02a - Carico Vento Y+	0	0	82
	8: Q02b - Carico Vento Y-	0	0	-143
	9: Q03a - Effetti Aerodinamici Convogli Y+	0	0	1
	10: Q03b - Effetti Aerodinamici Convogli Y-	0	0	-70
	11: T00 - DTu = +25°C	0	0	4
	12: T01 - DTu = -25°C	0	0	-4
	536: FASE 1 (G1)-SLE [Combination 524]	0	0	-115
	537: FASE 2 (G2)-SLE [Combination 525]	0	0	37
	538: FASE 3 (Qk)-SLE_39 [Combination 526]	0	0	60
	539: FASE 1 (G1)-SLU [Combination 527]	0	0	-156
	540: FASE 2 (G2)-SLU [Combination 528]	0	0	55
	541: FASE 3 (Qk)-SLU_39 [Combination 529]	0	0	91
	542: SLV-X [Combination 530]	0	0	-74
	543: SLV-Y [Combination 531]	0	0	37
	544: SLU min [Minimum Envelope 1]	0	0	-406
	545: SLU max [Maximum Envelope 2]	0	0	93
	546: SLE min [Minimum Envelope 3]	0	0	-282
	547: SLE max [Maximum Envelope 4]	0	0	51

APPOGGIO	CONDIZIONE DI CARICO/COMBINAZIONE	Vx (kN)	Vy (kN)	N (kN)
APPOGGIO 3	1: G00 - Peso Proprio	0	0	-72
	2: G01 - Carico Permanente soletta	0	0	-44
	3: G02a - Carico Pannelli Fonoassorbenti	0	0	37
	4: G02b - Carico Pannelli Fonoassorbenti DX	0	0	38
	5: Q00 - Sovraccarico Accidentale	0	0	-116
	6: Q01 - Carico Neve	0	0	63
	7: Q02a - Carico Vento Y+	0	0	-143
	8: Q02b - Carico Vento Y-	0	0	82
	9: Q03a - Effetti Aerodinamici Convogli Y+	0	0	-70
	10: Q03b - Effetti Aerodinamici Convogli Y-	0	0	1
	11: T00 - DTu = +25°C	0	0	4
	12: T01 - DTu = -25°C	0	0	-4
	536: FASE 1 (G1)-SLE [Combination 524]	0	0	-115
	537: FASE 2 (G2)-SLE [Combination 525]	0	0	37
	538: FASE 3 (Qk)-SLE_39 [Combination 526]	0	0	60
	539: FASE 1 (G1)-SLU [Combination 527]	0	0	-156
	540: FASE 2 (G2)-SLU [Combination 528]	0	0	55
	541: FASE 3 (Qk)-SLU_39 [Combination 529]	0	0	91
	542: SLV-X [Combination 530]	0	0	-73
	543: SLV-Y [Combination 531]	0	0	-188
	544: SLU min [Minimum Envelope 1]	0	0	-402
	545: SLU max [Maximum Envelope 2]	0	0	94
	546: SLE min [Minimum Envelope 3]	0	0	-280
	547: SLE max [Maximum Envelope 4]	0	0	51
APPOGGIO 4	1: G00 - Peso Proprio	0	-22	-279
	2: G01 - Carico Permanente soletta	0	0	-44
	3: G02a - Carico Pannelli Fonoassorbenti	0	-32	-232
	4: G02b - Carico Pannelli Fonoassorbenti DX	0	-33	-138
	5: Q00 - Sovraccarico Accidentale	0	-1	-83
	6: Q01 - Carico Neve	0	-54	-223
	7: Q02a - Carico Vento Y+	0	135	252
	8: Q02b - Carico Vento Y-	0	-82	-35
	9: Q03a - Effetti Aerodinamici Convogli Y+	0	60	171
	10: Q03b - Effetti Aerodinamici Convogli Y-	0	-1	77
	11: T00 - DTu = +25°C	0	-3	-4
	12: T01 - DTu = -25°C	0	3	4
	536: FASE 1 (G1)-SLE [Combination 524]	0	-22	-322
	537: FASE 2 (G2)-SLE [Combination 525]	0	-32	-232
	538: FASE 3 (Qk)-SLE_39 [Combination 526]	0	-52	-220
	539: FASE 1 (G1)-SLU [Combination 527]	0	-30	-435
	540: FASE 2 (G2)-SLU [Combination 528]	0	-47	-349
	541: FASE 3 (Qk)-SLU_39 [Combination 529]	0	-78	-331
	542: SLV-X [Combination 530]	0	-59	-603
	543: SLV-Y [Combination 531]	0	56	-377
	544: SLU min [Minimum Envelope 1]	0	-262	-1149
	545: SLU max [Maximum Envelope 2]	0	198	-62
	546: SLE min [Minimum Envelope 3]	0	-177	-798
	547: SLE max [Maximum Envelope 4]	0	131	-69

APPOGGIO	CONDIZIONE DI CARICO/COMBINAZIONE	Vx (kN)	Vy (kN)	N (kN)
APPOGGIO 5	1: G00 - Peso Proprio	0	22	-279
	2: G01 - Carico Permanente soletta	0	0	-44
	3: G02a - Carico Pannelli Fonoassorbenti	0	32	-232
	4: G02b - Carico Pannelli Fonoassorbenti DX	0	33	-234
	5: Q00 - Sovraccarico Accidentale	0	1	-83
	6: Q01 - Carico Neve	0	54	-223
	7: Q02a - Carico Vento Y+	1	83	-37
	8: Q02b - Carico Vento Y-	-1	-135	254
	9: Q03a - Effetti Aerodinamici Convogli Y+	0	1	77
	10: Q03b - Effetti Aerodinamici Convogli Y-	0	-61	171
	11: T00 - DTu = +25°C	0	3	-4
	12: T01 - DTu = -25°C	0	-3	4
	536: FASE 1 (G1)-SLE [Combination 524]	0	22	-322
	537: FASE 2 (G2)-SLE [Combination 525]	0	32	-232
	538: FASE 3 (Qk)-SLE_39 [Combination 526]	0	52	-220
	539: FASE 1 (G1)-SLU [Combination 527]	0	30	-435
	540: FASE 2 (G2)-SLU [Combination 528]	0	47	-349
	541: FASE 3 (Qk)-SLU_39 [Combination 529]	0	78	-331
	542: SLV-X [Combination 530]	-185	61	-521
	543: SLV-Y [Combination 531]	-14	174	-743
	544: SLU min [Minimum Envelope 1]	-2	-199	-1156
	545: SLU max [Maximum Envelope 2]	3	263	-201
	546: SLE min [Minimum Envelope 3]	-1	-132	-803
	547: SLE max [Maximum Envelope 4]	2	178	-162
APPOGGIO 6	1: G00 - Peso Proprio	0	0	-72
	2: G01 - Carico Permanente soletta	0	0	-44
	3: G02a - Carico Pannelli Fonoassorbenti	0	0	37
	4: G02b - Carico Pannelli Fonoassorbenti DX	0	0	38
	5: Q00 - Sovraccarico Accidentale	0	0	-116
	6: Q01 - Carico Neve	0	0	63
	7: Q02a - Carico Vento Y+	0	0	82
	8: Q02b - Carico Vento Y-	0	0	-143
	9: Q03a - Effetti Aerodinamici Convogli Y+	0	0	1
	10: Q03b - Effetti Aerodinamici Convogli Y-	0	0	-71
	11: T00 - DTu = +25°C	0	0	4
	12: T01 - DTu = -25°C	0	0	-4
	536: FASE 1 (G1)-SLE [Combination 524]	0	0	-115
	537: FASE 2 (G2)-SLE [Combination 525]	0	0	37
	538: FASE 3 (Qk)-SLE_39 [Combination 526]	0	0	60
	539: FASE 1 (G1)-SLU [Combination 527]	0	0	-156
	540: FASE 2 (G2)-SLU [Combination 528]	0	0	55
	541: FASE 3 (Qk)-SLU_39 [Combination 529]	0	0	91
	542: SLV-X [Combination 530]	0	0	-73
	543: SLV-Y [Combination 531]	0	0	39
	544: SLU min [Minimum Envelope 1]	0	0	-406
	545: SLU max [Maximum Envelope 2]	0	0	95
	546: SLE min [Minimum Envelope 3]	0	0	-282
	547: SLE max [Maximum Envelope 4]	0	0	52

APPOGGIO	CONDIZIONE DI CARICO/COMBINAZIONE	Vx (kN)	Vy (kN)	N (kN)
APPOGGIO 7	1: G00 - Peso Proprio	0	0	-72
	2: G01 - Carico Permanente soletta	0	0	-44
	3: G02a - Carico Pannelli Fonoassorbenti	0	0	37
	4: G02b - Carico Pannelli Fonoassorbenti DX	0	0	38
	5: Q00 - Sovraccarico Accidentale	0	0	-116
	6: Q01 - Carico Neve	0	0	63
	7: Q02a - Carico Vento Y+	0	0	-143
	8: Q02b - Carico Vento Y-	0	0	82
	9: Q03a - Effetti Aerodinamici Convogli Y+	0	0	-71
	10: Q03b - Effetti Aerodinamici Convogli Y-	0	0	1
	11: T00 - DTu = +25°C	0	0	4
	12: T01 - DTu = -25°C	0	0	-4
	536: FASE 1 (G1)-SLE [Combination 524]	0	0	-115
	537: FASE 2 (G2)-SLE [Combination 525]	0	0	37
	538: FASE 3 (Qk)-SLE_39 [Combination 526]	0	0	60
	539: FASE 1 (G1)-SLU [Combination 527]	0	0	-156
	540: FASE 2 (G2)-SLU [Combination 528]	0	0	55
	541: FASE 3 (Qk)-SLU_39 [Combination 529]	0	0	91
	542: SLV-X [Combination 530]	0	0	-73
	543: SLV-Y [Combination 531]	0	0	-190
	544: SLU min [Minimum Envelope 1]	0	0	-403
	545: SLU max [Maximum Envelope 2]	0	0	95
	546: SLE min [Minimum Envelope 3]	0	0	-281
	547: SLE max [Maximum Envelope 4]	0	0	52
APPOGGIO 8	1: G00 - Peso Proprio	0	-22	-279
	2: G01 - Carico Permanente soletta	0	0	-44
	3: G02a - Carico Pannelli Fonoassorbenti	0	-32	-232
	4: G02b - Carico Pannelli Fonoassorbenti DX	0	-32	-137
	5: Q00 - Sovraccarico Accidentale	0	-1	-83
	6: Q01 - Carico Neve	0	-54	-223
	7: Q02a - Carico Vento Y+	-1	135	254
	8: Q02b - Carico Vento Y-	1	-83	-37
	9: Q03a - Effetti Aerodinamici Convogli Y+	0	61	171
	10: Q03b - Effetti Aerodinamici Convogli Y-	0	-1	77
	11: T00 - DTu = +25°C	0	-3	-4
	12: T01 - DTu = -25°C	0	3	4
	536: FASE 1 (G1)-SLE [Combination 524]	0	-22	-322
	537: FASE 2 (G2)-SLE [Combination 525]	0	-32	-232
	538: FASE 3 (Qk)-SLE_39 [Combination 526]	0	-52	-220
	539: FASE 1 (G1)-SLU [Combination 527]	0	-30	-435
	540: FASE 2 (G2)-SLU [Combination 528]	0	-47	-349
	541: FASE 3 (Qk)-SLU_39 [Combination 529]	0	-78	-331
	542: SLV-X [Combination 530]	-170	-60	-522
	543: SLV-Y [Combination 531]	12	57	-374
	544: SLU min [Minimum Envelope 1]	-3	-263	-1151
	545: SLU max [Maximum Envelope 2]	2	199	-58
	546: SLE min [Minimum Envelope 3]	-2	-177	-799
	547: SLE max [Maximum Envelope 4]	1	132	-66

11.3 VERIFICA APPARECCHIO DI APPOGGIO

La tipologia di dispositivi di appoggio è del tipo a disco elastomerico confinato acciaio-PFTE, detti "appotti pot". La seguente immagina mostra la tipologia di appoggio.

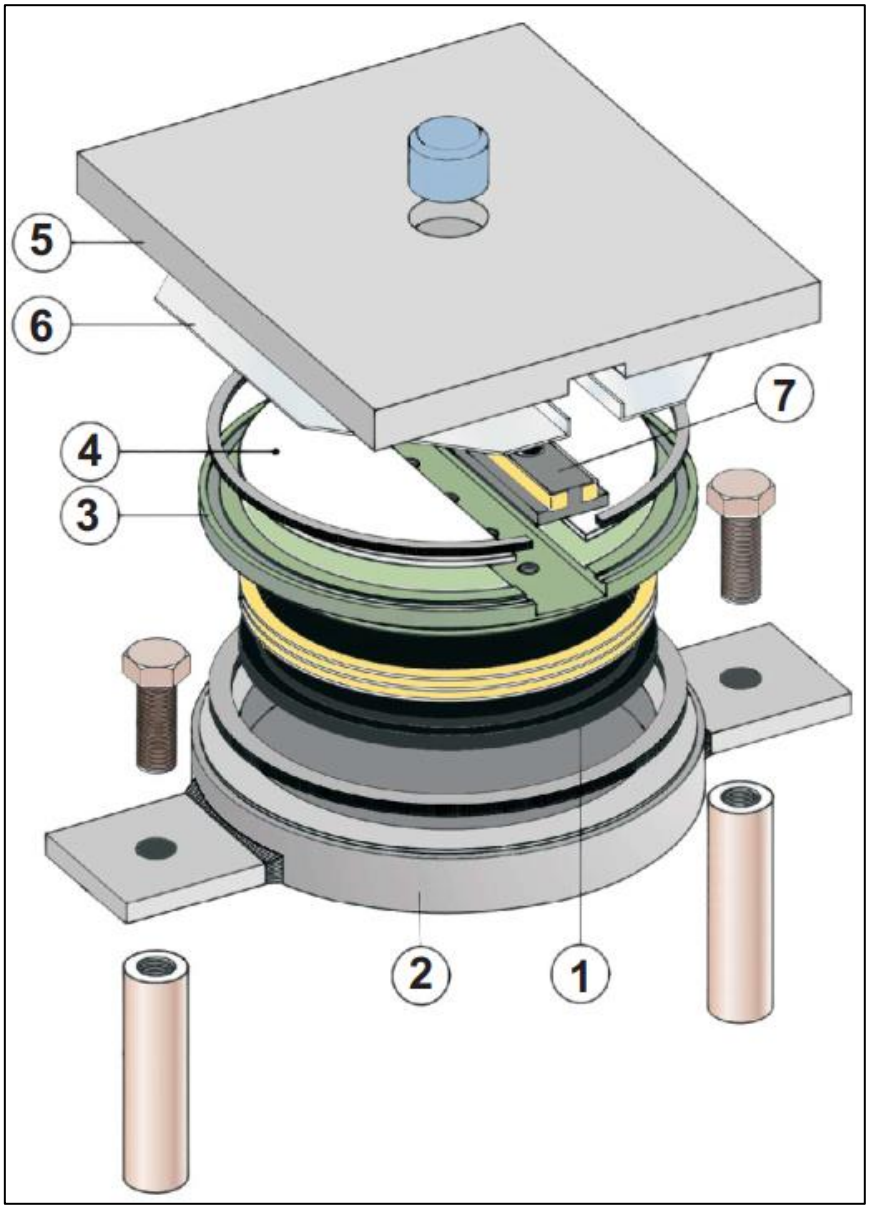

Figura 11-2: Tipologia di appoggio

Le seguenti tabelle invece mostrano le tabelle di dimensionamento con riferimento all'appoggio di tipo fisso secondo due diversi produttori di appoggi.

VF NORMAL

BEARING TYPE	DESIGN VERTICAL LOAD $N_{sd\ ULS}$ kN	MAXIMUM HORIZONTAL LOAD V_{ULS} kN	BASE ELEMENT DIAMETER D_o mm	DOWELS (UPPER/LOWER) n_b n	type	UPPER ELEMENT DIAMETER B mm	UPPER OVERALL DIMENSIONS C TRANSVERSAL mm	UPPER OVERALL DIMENSIONS D LONGITUDINAL mm	LOWER OVERALL DIMENSIONS G TRANSVERSAL mm	LOWER OVERALL DIMENSIONS F LONGITUDINAL mm	BEARING TOTAL HEIGHT H_{tot} mm	BEARING WEIGHT (EXCEPT ANCHORING) W kg
VF 50-5	500	50	160	2/2	1	150	150	250	160	270	69	9
VF 100-10	1.000	100	210	4/4	1	200	250	250	250	250	69	15
VF 150-15	1.500	150	245	4/4	1	235	270	270	280	280	73	22
VF 200-20	2.000	200	285	4/4	1	265	290	290	310	310	73	28
VF 250-25	2.500	250	320	4/4	1	295	320	320	330	330	77	38
VF 300-30	3.000	300	350	4/4	2	320	380	380	400	400	81	47

Portata Vert. Load KN	HR KN	B mm	H mm
500	50	210	49
750	75	230	49
1000	100	260	52
1250	125	290	62
1500	150	310	62
1750	175	340	67
2000	200	360	67
2250	225	380	67
2500	250	400	71
2750	275	420	76

Figura 11-3: Tabelle di dimensionamento appoggi di tipo fisso.

11.4 SPOSTAMENTI AGLI APPOGGI

Lo spostamento principale a cui fare riferimento è lo spostamento longitudinale in quanto la struttura è trasversalmente praticamente fissa. Esiste solo la minima escursione consentita tra le coppie di appoggi, ma essa ha carattere trascurabile,

Lo spostamento massimo longitudinale vale 12.7 mm mentre sismica 4.5 mm considerando anche l'escursione termica (al 50% in condizione sismica)

11.5 VERIFICA BAGGIOLI

Segue la verifica del baggiolo in corrispondenza della mensola essendo il più alto quindi maggiormente sollecitato.

VERIFICA BAGGIOLO SU MENSOLA

INPUT

SOLLECITAZIONI DI VERIFICA

Combinazione	N_{Sd} [kN]	M_{Sd} [kNm]	V_{Sd} [kN]
SLE Quasi Permanente	-800	123	-
SLE Frequente	-800	123	-
SLE Rara	-800	123	-
SLU	-1156	182	260
SLV	0	152	217

CARATTERISTICHE GEOMETRICHE DELLA SEZIONE IN C.A.

Geometria della sezione		
Base (ortogonale al Taglio)	B [cm]	60
Altezza (parallela al Taglio)	H [cm]	50
Altezza utile della sezione	d [cm]	43
Area di calcestruzzo	A_c [cm^2]	3000

Armatura longitudinale tesa		1° STRATO	2° STRATO	3° STRATO
Numero Barre	n	5	0	0
Diametro	ϕ [mm]	16	0	0
Posizione dal lembo esterno	c [cm]	7.5	0.0	0.0
Area strato	As [cm^2]	10.05	0.00	0.00
Rapporto di armatura	ρ [%]		0.394%	

Armatura longitudinale compressa		1° STRATO	2° STRATO	3° STRATO
Numero Barre	n	5	0	0
Diametro	ϕ [mm]	16	0	0
Posizione dal lembo esterno	c' [cm]	7.5	0.0	0.0
Area strato	As' [cm^2]	10.05	0.00	0.00
Rapporto di armatura	ρ' [%]		0.394%	

Armatura trasversale		1° TIPO	2° TIPO	3° TIPO
Diametro	ϕ [mm]	12	0	0
Numero bracci	n_{bi}	2	0	0
Passo	s_w [cm]	15	0	0
Inclinazione	α [deg]	90	90	90
Area armatura a metro	A_{sw}/s_w [cm^2/m]	15.08	0.00	0.00

CARATTERISTICHE REOLOGICHE DEI MATERIALI

Concrete		
Resistenza cubica a compressione	RCK	70
Resistenza cilindrica caratteristica a compressione	f_{ck} [Mpa]	60.00
Resistenza cilindrica media a compressione	f_{cm} [Mpa]	68.00
Resistenza media a trazione per flessione	f_{ctm} [Mpa]	4.35
Resistenza caratteristica a trazione per flessione	f_{ctk} [Mpa]	3.05
Resistenza di progetto a compressione	f_{cd} [Mpa]	34.00
Resistenza di progetto delle bielle compresse	$f_{cd'}$ [Mpa]	15.50

Acciaio		
Resistenza di progetto a snervamento	f_{yd} [Mpa]	391.30

OUTPUT

VERIFICHE IN ESERCIZIO

Verifica Tensionale			σ limit
Calcestruzzo SLE Quasi Permanente	σ_c [Mpa] =	7.40	27.0
Calcestruzzo SLE Rara	σ_c [Mpa] =	7.40	36.0
Acciaio SLE Rara	σ_s [Mpa] =	29.77	360.0

Verifica di fessurazione			w limit
Combinazione SLE Quasi permanente	w_d [mm] =	0.000	0.300
Combinazione SLE Frequente	w_d [mm] =	0.000	0.400

VERIFICA DI RESISTENZA A TAGLIO

Sollecitazioni di progetto		
Taglio sollecitante = max Taglio(SLU,SLV)	V_{Sd} [kN]	260.0
Sforzo Normale concomitante al massimo taglio	N_{Sd} [kN]	-1156.0

Verifica di resistenza in assenza di armatura specifica		
Resistenza di progetto senza armatura specifica	V_{Rd1} [KN]	298.73
Coefficiente di sicurezza	V_{Rd1}/V_{Sd}	1.15

Verifica di resistenza dell'armatura specifica		
CoTan(θ) di progetto	cotan(θ)	2.5
Resistenza a taglio delle bielle compresse in cls	$V_{Rd2}(\theta)$ [KN]	1366
Resistenza a taglio dell'armatura	$V_{Rd3}(\theta)$ [KN]	564
Resistenza a taglio di progetto	V_{Rd} [KN]	564
Coefficiente di sicurezza	V_{Rd}/V_{Sd}	2.17

VERIFICA DI RESISTENZA A PRESSO-FLESSIONE

Sollecitazioni di progetto		SLU	SLV
Momento sollecitante	M_{Sd} [kNm]	182.0	151.9
Sforzo Normale concomitante	N_{Sd} [kN]	-1156.0	0.0

Verifica di resistenza in termini di momento		SLU	SLV
Momento resistente	M_{Rd} [kNm]	395.7	180.0
Coefficiente di sicurezza	M_{Rd}/M_{Sd}	2.17	1.19

Verifica di resistenza in termini di sforzo normale		SLU	SLV
Sforzo normale resistente	N_{Rd} [kN]	-	-
Coefficiente di sicurezza	N_{Rd}/N_{Sd}	-	-

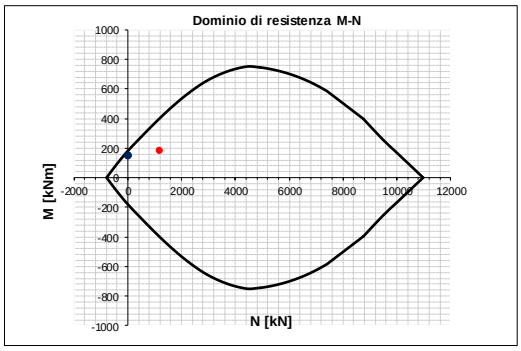

11.6 VERIFICA RITEGNI SISMICI

La verifica dei ritegni sismici avviene per la forza SLC moltiplicata per un coefficiente dinamico dato dalla forza impulsiva di impatto pari a 1,5. Si evidenzia il fatto che tali ritegni entrano in funzione solo in caso di superamento della resistenza degli appoggi calcolata invece all'SLV.

Le seguenti immagini mostrano i tagli sugli appoggi all'SLC ottenute dal modello FE (non amplificate per il coefficiente dinamico.

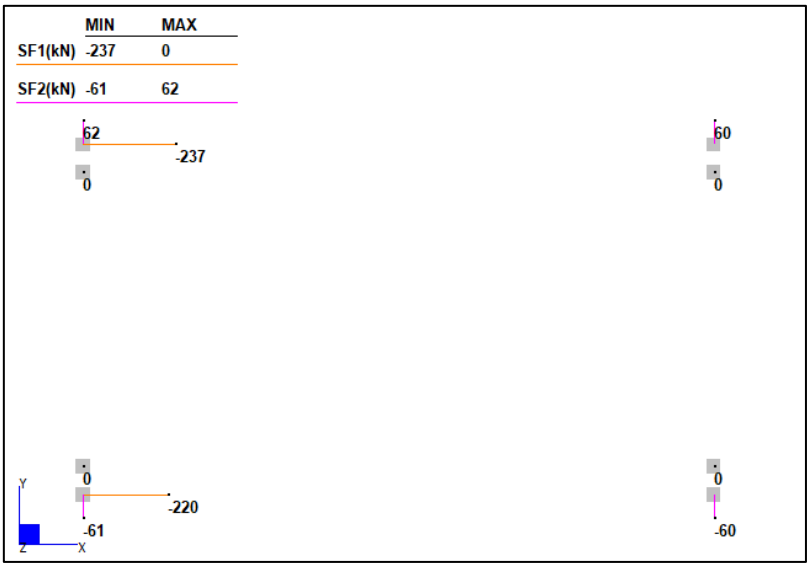

Figura 11-4: Tagli appoggi all'SLC-X

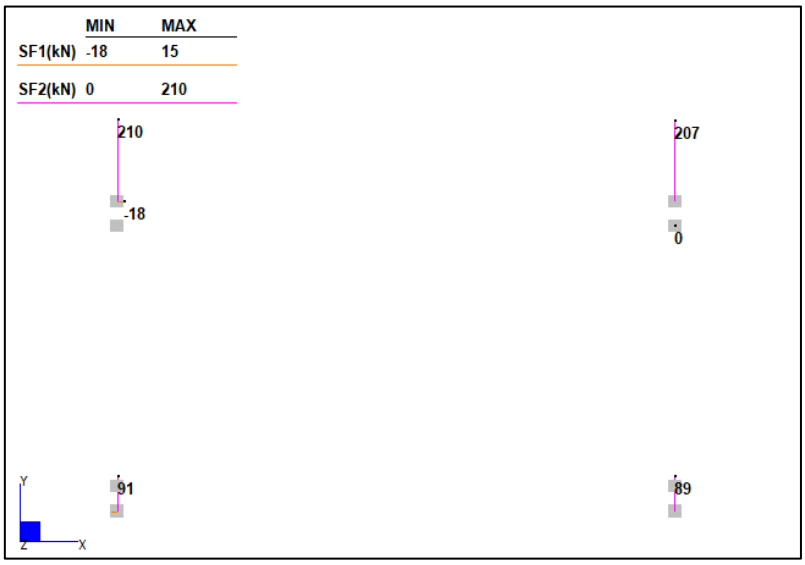

Figura 11-5: Tagli appoggi all'SLC-Y

Le forze di progetto sul ritegno, considerando principale l'azione sismica in X valgono quindi:

$$V_{x,Ed} = 1.5\ x237 = 356\ (kN)$$
$$V_{y,Ed} = 0.3x1.5\ x\ 210 = 95\ (kN)$$

Le forze di progetto sul ritegno, considerando principale l'azione sismica in Y valgono invece:

$$V_{x,Ed} = 0.3x1.5\ x237 = 107\ (kN)$$
$$V_{y,Ed} = 1.5\ x\ 210 = 315\ (kN)$$

Si progetta come ritegno sismico una chiave di taglio costituita da un profilo tubolare quadro 300x12 saldato alla piattabanda inferiore del traverso di appoggio e inserito in una tasca realizzata all'interno dei baggioli.

La lunghezza di inflessione del ritegno dal punto di contatto del ritegno sul calcestruzzo alla sezione di incastro sul traverso è assunta cautaletaivamente pari a 150 mm.

Segue il foglio di verifica del profilo.

VERIFICA RITEGNO SISMICO METALLICO

INPUT

CARATTERISTICHE GEOMETRICHE MECCANICHE

Caratteristiche acciaio			
Tensione caratteristica di snervamento	f_{yk}	275	MPa
Modulo elasticità acciaio	E_a	206000	MPa
Coefficiente parziale di sicurezza	γ_{M0}	1.05	-
Coefficiente parziale di sicurezza	γ_{M1}	1.10	-

Dati geometrici della sezione			
Larghezza esterna in y (Lato corto)	b_{ye}	300	mm
Larghezza esterna in z (Lato lungo)	b_{ze}	300	mm
Spessore flangia in y (Flangia del lato lungo)	t_{fy}	12	mm
Spessore flangia in z (Flangia del lato corto)	t_{fz}	12	mm

Dati geometrici della sezione			
Larghezza interna in y	b_{yi}	276	mm
Larghezza interna in z	b_{zi}	276	mm
Area acciaio	A_a	138	cm^2
Area taglio lato y	A_{wy}	72	cm^2
Area taglio lato z	A_{wz}	72	cm^2

Flessione attorno all'asse Y-Y (Asse Forte)			
Momento d'inerzia	I_{yy}	19143	cm^4
Raggio d'inerzia	ρ_{yy}	11.77	cm
Modulo di resistenza elastico	$W_{el,yy}$	1276.23	cm^3
Modulo di resistenza plastico	$W_{pl,yy}$	1493.86	cm^3

Flessione attorno all'asse Z-Z (Asse Debole)			
Momento d'inerzia	I_{zz}	19143	cm^4
Raggio d'inerzia	ρ_{zz}	11.77	cm
Modulo di resistenza elastico	$W_{el,zz}$	1276	cm^3
Modulo di resistenza plastico	$W_{pl,zz}$	1494	cm^3

Geometria globale elemento		Asse Y	Asse Z
Coefficiente di vincolo	β	1.00	1.00
Altezza	L [mm]	150	150
Coefficiente di imperfezione	α	0.49	0.49

SOLLECITAZIONI

Sollecitazioni		Asse Y	Asse Z
Sforzo normale di compressione	N_{Ed} [kN]	0.00	
Momento flettente	M_{Ed} [kNm]	53	14
Taglio	V_{Ed} [kN]	356	95

OUTPUT

VALUTAZIONE RESISTENZA ELEMENTO

Parametri meccanici instabilità a compressione		Asse Y	Asse Z
Lunghezza di libera d'inflessione	L_0 [mm]	150	150
Snellezza	λ_0	1.27	1.27
Carico critico euleriano	N_{cr} [kN]	17298372	17298372
Snellezza adimensionale	λ'	0.015	0.015
Snellezza relativa	Φ	0.45	0.45
Coefficiente d'instabilità	χ	1.00	1.00

Resistenze critiche		Asse Y	Asse Z
Compressione	$N_{B,Rd}$ [kN]	3456.00	3456.00
Tasso di lavoro	$N_{Ed}/N_{B,Rd}$	0.000	0.000
Tensione critica elastica equivalente	σ_{cr} [MPa]	250.00	250.00

Calcolo dei coefficienti di interazione		Asse Y	Asse Z
Coefficienti di distribuzione del momento	ψ_y-ψ_z	0.90	0.00
Coefficienti di momento equivalente	α_{my} - α_{my}	0.96	0.60
Coefficiente di interazione	k_{yy} - k_{zz}	1.000	1.000
Coefficienti di interazione misti	k_{yz} - k_{zy}	1.000	1.000

Resistenze plastiche		Asse Y	Asse Z
Resistenza di calcolo a compressione	$N_{pl,Rd}$ [kN]	3621	3621
Momento resistente plastico	$M_{pl,Rd}$ [kNm]	391.25	391

Tensioni normali elastiche		$\sigma_{N,Ed}$ [MPa]	$\sigma_{My,Ed}$ [MPa]	$\sigma_{Mz,Ed}$ [MPa]
Tensioni parziali	$\sigma_{i,Ed}$ [MPa]	0.0	41.8	11.2
Tensione sollecitante totale	σ_{Ed} [MPa]		53.0	

Tensioni tangenziali elastiche		$\tau_{y,Ed}$ [MPa]	$\tau_{z,Ed}$ [MPa]
Tensioni parziali	τ_{Ed} [MPa]	49.4	13.2
Tensioni ideali	$\sigma_{id,Ed}$ [MPa]	100.7	57.7
Coefficiente di sicurezza verifica tensionale	f_d/σ_{id}	2.60	4.54

INSTABILITA' A PRESSO-FLESSIONE

Resistenze critiche presso-flessione		Asse Y	Asse Z
Tasso di lavoro da Momento asse y	$kM_{y,Ed}/M_{pl,y,Rd}$	0.136	0.136
Tasso di lavoro da Momento asse z	$kM_{z,Ed}/M_{pl,z,Rd}$	0.036	0.036

Verifica finale	Asse Y	Asse Z
Tasso di lavoro complessivo	0.173	0.173
Coefficiente di sicurezza verifica di instabilità	5.78	5.78

Segue infine la verifica a taglio scorrimento del baggiolo.

DESIGN STRESS RESULTANTS

	N_{Ed} [kN]	V_{Ed} [kN]
Static ULS	681	0
Seismic ULS	0	356

GEOMETRICAL CHARACTERISTICS

Cross-section geometry

Base (orthogonal to the shear force)	B [cm]	500
Depth (parallel to the shear force)	D [cm]	500
Heigth	H [cm]	15
Concrete cover	c_r [cm]	4
Gross section area	A_c [cm^2]	250000

Vertical bars — ρ[%] **0.007**

		1st LAYER	2nd LAYER	3rd LAYER
Number of bars	n	16	0	0
Diameter	ϕ[mm]	12	0	0
Bars area	As [cm^2]	18.10	0.00	0.00

Stirrups — ρ[%] **0.013**

		1st LAYER	2nd LAYER	3rd LAYER
Legs number	n_{bi}	2	0	0
Diameter	ϕ[mm]	8	0	0
Spacing	s_w [cm]	15	15	15
Bars area	Asw [cm^2]	1.01	0.00	0.00

Horizontal bars — ρ[%] **0.335**

		1st LAYER	2nd LAYER	3rd LAYER
Number of bars	n	8	0	0
Diameter	ϕ[mm]	20	0	0
Bars area	As [cm^2]	25.13	0.00	0.00

Confinemen stirrups

		1st LAYER	2nd LAYER	3rd LAYER
Bar Diameter	ϕ[mm]	5	0	0
Spacing	s_w [cm]	15	1	1
Confined length	Lc [cm]	90	0	0
Bars area	A_{sw} [cm^2]	0.39	0.00	0.00
Stirrup perimeter	p[cm]	360.00	0.00	0.00
Confined concrete area	A_{cc} [cm^2]	8100.00	0.00	0.00

Bearing device geometry

Device dimension	B_b [cm]	400
Device area	A_d [cm^2]	160000

SLIDING SHEAR STRENGTH

Vertical bars strength	V_{Rsd} [KN]	843
Concrete strength	V_{Rcd} [KN]	67433
Design shear strength	V_{Rd} [KN]	843
Safety margin	V_{Rd}/V_{Ed}	**2.37**

AXIAL STRENGTH

Concrete strength	N_{Rcd} [KN]	31733
Confinement stirrups strength	N_{Rsd} [KN]	384294
Design axial strength	N_{Rd} [KN]	416027
Safety margin	N_{Rd}/N_{Ed}	**610.91**

SPLITTING FORCE STRENGTH

Splitting force	H_{Ed} [KN]	41
Splitting force strength	H_{Rd} [KN]	983
Safety margin	H_{Rd}/H_{Ed}	**24.07**

12. VERIFICHE SOTTOSTRUTTURE

12.1 PREMESSA

Per la verifica dei micropali, disposti nella fondazione della spalla, si rimanda all'elaborato IB0U1BEZZCLBA0900001.

12.2 AZIONI ALLA BASE DELLE SPALLE

Si riportano sotto le azioni globali riferite all'intradosso fondazione e al baricentro dei pali, con riferimento al seguente sistema di riferimento e alla nomenclatura delle sottostrutture definita alla Figura *11-1*

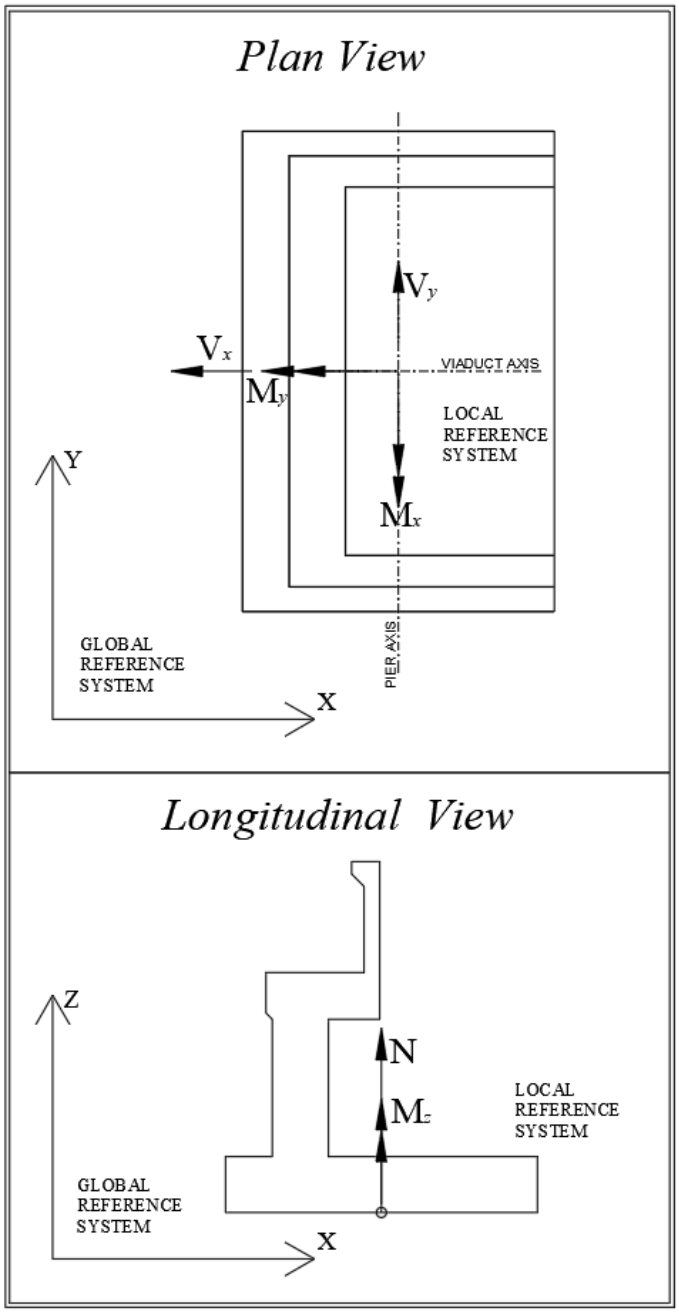

Figura 12-1: Sistema di riferimento delle azioni globali

	V_x [kN]	M_x [kNm]	V_y [kN]	M_y [kNm]	N [kN]	M_z [kNm]
BA04: 1: G00 - Peso Proprio	0	0	-22	-217	-409	0
BA04: 2: G01 - Carico Permanente soletta	0	0	0	-18	-88	0
BA04: 3: G02a - Carico Pannelli Fonoassorbenti	0	0	-32	-232	-195	0
BA04: 4: G02b - Carico Pannelli Fonoassorbenti DX	0	0	-32	-157	-99	0
BA04: 5: Q00 - Sovraccarico Accidentale	0	0	-1	-21	-199	0
BA04: 6: Q01 - Carico Neve	0	0	-54	-257	-160	0
BA04: 7: Q02a - Carico Vento Y+	-1	-1	135	395	110	1
BA04: 8: Q02b - Carico Vento Y-	1	1	-83	-145	46	-1
BA04: 9: Q03a - Effetti Aerodinamici Convogli Y+	0	0	61	226	101	0
BA04: 10: Q03b - Effetti Aerodinamici Convogli Y-	0	0	-1	60	77	0
BA04: 11: T00 - DTu = +25°C	0	0	-3	-8	0	0
BA04: 12: T01 - DTu = -25°C	0	0	3	8	0	0
BA04: 15: SLU_01 [Combination 3]	0	0	-78	-697	-1263	0
BA04: 124: SLU_110 [Combination 112]	-3	-3	136	26	-705	2
BA04: 542: SLV-X [Combination 530]	-170	-170	-60	-441	-658	-136
BA04: 543: SLV-Y [Combination 531]	12	12	57	-171	-618	9
BA03: 1: G00 - Peso Proprio	0	0	22	217	-409	0
BA03: 2: G01 - Carico Permanente soletta	0	0	0	18	-88	0
BA03: 3: G02a - Carico Pannelli Fonoassorbenti	0	0	32	232	-195	0
BA03: 4: G02b - Carico Pannelli Fonoassorbenti DX	0	0	33	235	-196	0
BA03: 5: Q00 - Sovraccarico Accidentale	0	0	1	21	-199	0
BA03: 6: Q01 - Carico Neve	0	0	54	257	-160	0
BA03: 7: Q02a - Carico Vento Y+	1	1	83	145	46	1
BA03: 8: Q02b - Carico Vento Y-	-1	-1	-135	-395	110	-1
BA03: 9: Q03a - Effetti Aerodinamici Convogli Y+	0	0	1	-60	77	0
BA03: 10: Q03b - Effetti Aerodinamici Convogli Y-	0	0	-61	-226	101	0
BA03: 11: T00 - DTu = +25°C	0	0	3	8	0	0
BA03: 12: T01 - DTu = -25°C	0	0	-3	-8	0	0
BA03: 15: SLU_01 [Combination 3]	0	0	78	697	-1263	0
BA03: 124: SLU_110 [Combination 112]	3	3	263	1093	-974	2
BA03: 542: SLV-X [Combination 530]	-185	-185	61	438	-659	148
BA03: 543: SLV-Y [Combination 531]	-14	-14	174	775	-781	11

	V_x [kN]	M_x [kNm]	V_y [kN]	M_y [kNm]	N [kN]	M_z [kNm]
BA02: 1: G00 - Peso Proprio	0	0	-22	-217	-409	0
BA02: 2: G01 - Carico Permanente soletta	0	0	0	-18	-88	0
BA02: 3: G02a - Carico Pannelli Fonoassorbenti	0	0	-32	-232	-195	0
BA02: 4: G02b - Carico Pannelli Fonoassorbenti DX	0	0	-33	-158	-100	0
BA02: 5: Q00 - Sovraccarico Accidentale	0	0	-1	-21	-199	0
BA02: 6: Q01 - Carico Neve	0	0	-54	-257	-160	0
BA02: 7: Q02a - Carico Vento Y+	0	0	135	393	109	0
BA02: 8: Q02b - Carico Vento Y-	0	0	-82	-143	47	0
BA02: 9: Q03a - Effetti Aerodinamici Convogli Y+	0	0	60	225	100	0
BA02: 10: Q03b - Effetti Aerodinamici Convogli Y-	0	0	-1	61	78	0
BA02: 11: T00 - DTu = +25°C	0	0	-3	-8	0	0
BA02: 12: T01 - DTu = -25°C	0	0	3	8	0	0
BA02: 15: SLU_01 [Combination 3]	0	0	-78	-697	-1263	0
BA02: 124: SLU_110 [Combination 112]	0	0	134	20	-708	0
BA02: 542: SLV-X [Combination 530]	0	0	-59	-509	-739	0
BA02: 543: SLV-Y [Combination 531]	0	0	56	-176	-619	0
BA01: 1: G00 - Peso Proprio	0	0	22	217	-409	0
BA01: 2: G01 - Carico Permanente soletta	0	0	0	18	-88	0
BA01: 3: G02a - Carico Pannelli Fonoassorbenti	0	0	32	232	-195	0
BA01: 4: G02b - Carico Pannelli Fonoassorbenti DX	0	0	32	234	-195	0
BA01: 5: Q00 - Sovraccarico Accidentale	0	0	1	21	-199	0
BA01: 6: Q01 - Carico Neve	0	0	54	257	-160	0
BA01: 7: Q02a - Carico Vento Y+	0	0	82	143	47	0
BA01: 8: Q02b - Carico Vento Y-	0	0	-135	-393	109	0
BA01: 9: Q03a - Effetti Aerodinamici Convogli Y+	0	0	1	-61	78	0
BA01: 10: Q03b - Effetti Aerodinamici Convogli Y-	0	0	-60	-225	100	0
BA01: 11: T00 - DTu = +25°C	0	0	3	8	0	0
BA01: 12: T01 - DTu = -25°C	0	0	-3	-8	0	0
BA01: 15: SLU_01 [Combination 3]	0	0	78	697	-1263	0
BA01: 124: SLU_110 [Combination 112]	0	0	261	1088	-971	0
BA01: 542: SLV-X [Combination 530]	0	0	59	509	-741	0
BA01: 543: SLV-Y [Combination 531]	0	0	172	770	-780	0

12.3 MENSOLA BA-01

Si riporta di seguito il dimensionameto della mensola tozza impiegata come basamento/spalla, ubicata in corrispondenza del Muro 1 (Lato Isarco). Si considera la porzione di mensola sull'appoggio maggiormente sollecitato in asse con il muro, con una larghezza pari a quella del muro, considerando la sola forza dell'appoggio più esterno maggiormente sollecitato.

MENSOLA: STRUT-AND-TIE MECHANISM

INPUT

R.C. CROSS-SECTION GEOMETRICAL CHARACTERISTICS

Beam Cross-section geometry

Base (orthogonal to the shear force)	B [cm]	80
Depth (parallel to the shear force)	H [cm]	120

Pier/wall/column geometry

Pier/wall stem trasnversal width	W_{pv} [cm]	40
Pier/wall stem lonfitudinal width	W_{px} [cm]	65
Distance Force-pier edge	a [cm]	75

Horizontal bars

		1st LAYER	2nd LAYER	3rd LAYER
Number of bars	n	5.0	5.0	0
Diameter	ϕ [mm]	24	20	0
Distance from the external surface	c [cm]	6.6	21.6	0.0
Bars area	As [cm²]	22.62	15.71	0.00
Total area			38.33	

Diagonal bars

Number of bars	n	5
Diameter	ϕ [mm]	20
Inclination	α [deg]	45
Bars area	As [cm²]	15.71

MECHANICAL PROPERTIES OF MATERIALS

Concrete

Characteristic compressive cylinder strength	f_{ck} [Mpa]	28.00
Partial factor	γ_c	1.50
Design compressive strength	f_{cd} [Mpa]	15.87
Sirrups coefficient (c=1 w/o stirrups c=1.5 w stirrups)	c [-]	1.00

Reinforcing steel bars

Steel bars yeld strength	f_{yd} [Mpa]	450
Partial factor	γ_S	1.15
Design tensile strength	f_{yd} [Mpa]	391.30

DESIGN STRESS RESULTANTS

Load Combinations	H_{Ed} [kN]	P_{Ed} [kN]
SLE	0	805
SLU	0	1200

OUTPUT

GEOMETRY OF THE STRUT-AND-TIE MODEL

Beam Cross-section geometry

Bars centroid distance from external surface		c [cm]	12.7
Effective depth		d [cm]	107.3

Strut geometry

Strut horizontal length		*l* [cm]	85
Strut design inclination		ψ [deg]	49
Strut design inclination		ψ [rad]	0.85
Pier edge-strut node distance	0.2d	p [cm]	21
Pier edge-strut node distance	Wp/4	p [cm]	10

VERIFICATION OF THE HORIZONTAL TIE MECHANISM

Axial force tie calculation SLE

Axial force SLE	N_{tk} [KN]	709
Steel stress	σ_s [Mpa]	185

Axial force tie calculation SLU

Axial force SLU	N_{td} [KN]	1057
Axial strength	N_{Rd} [KN]	1500
Safety margin	N_{Rd}/N_{td}	1.42

Shear strength calculation

Shear strength of compression strut	P_{Rcd} [KN]	2492
Shear strength of steel bars	P_{Rsd} [KN]	1703
Design shear strength	P_{Rd} [KN]	1703
Safety margin	P_{Rd}/P_{Ed}	1.42

VERIFICATION OF THE DIAGONAL TIE MECHANISM

Diagonal tie mechanism shear strength

Shear strength of compression struts	ΔP_{Rcd} [KN]	2212
Shear strength of steel bars	ΔP_{Rsd} [KN]	435
Design shear strength	ΔP_{Rd} [KN]	435
Safety margin	$\Delta P_{Rd}/P_{Ed}$	0.36

VERIFICATION OF THE COMBINED TIE MECHANISM

Shear strength calculation

Design shear strength	$P_{Rd,TOT}$	2051
Safety margin	$P_{Rd,TOT}/P_{Ed}$	1.71

12.4 SPALLA BA-03, BA-04

Si riporta la verifica con meccanismo tirante-puntone del plinto della spalla con i mircopali secondo il seguente schema in cui conservativamente si considerano i puntoni direzionarsi verso l'asse appoggio, mentre in realtà data la larghezza dell'appoggio e del baggiolo l'inclinazione del puntone sarebbe molto maggiore.

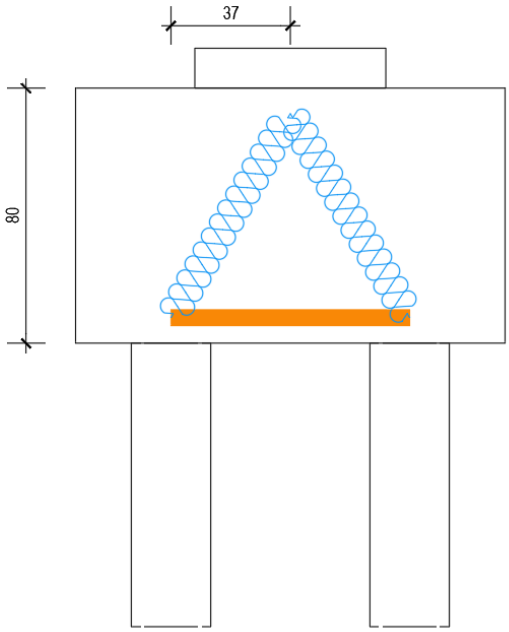

Figura 12-2: Schema meccanismo tirante-puntone fondazione spalla

Si considera come larghezza efficace l'interasse tra i pali pari a 75 cm e come forza la massima reazione del micropalo ottenuto dall'analisi della fondazione riportata nella relazione geotecnica pari a circa 550 kN. Si dispone armatura Ø16/15 trasversale di forza e anche Ø16/15 longitudinali ripartitori su tutto il perimetro.

FONDAZIONE SPALLA: STRUT-AND-TIE MECHANISM

INPUT

R.C. CROSS-SECTION GEOMETRICAL CHARACTERISTICS

Beam Cross-section geometry

Base (orthogonal to the shear force)	B [cm]	75
Depth (parallel to the shear force)	H [cm]	80

Pier/wall/column geometry

Pier/wall stem trasnversal width	W_{py} [cm]	60
Pier/wall stem lonfitudinal width	W_{px} [cm]	75
Distance Force-pier edge	a [cm]	24

Horizontal bars

		1st LAYER	2nd LAYER	3rd LAYER
Number of bars	n	5.0	0.0	0
Diameter	ϕ [mm]	16	0	0
Distance from the external surface	c [cm]	6.6	0.0	0.0
Bars area	As [cm^2]	10.05	0.00	0.00
Total area			10.05	

Diagonal bars

Number of bars	n	0
Diameter	ϕ [mm]	0
Inclination	α [deg]	0
Bars area	As [cm^2]	0.00

MECHANICAL PROPERTIES OF MATERIALS

Concrete

Characteristic compressive cylinder strength	f_{ck} [Mpa]	28.00
Partial factor	γ_c	1.50
Design compressive strength	f_{cd} [Mpa]	15.87
Sirrups coefficient (c=1 w/o stirrups c=1.5 w stirrups)	c [-]	1.00

Reinforcing steel bars

Steel bars yeld strength	f_{yd} [Mpa]	450
Partial factor	γ_S	1.15
Design tensile strength	f_{yd} [Mpa]	391.30

DESIGN STRESS RESULTANTS

Load Combinations	H_{Ed} [kN]	P_{Ed} [kN]
SLE	0	0
SLU	0	550

OUTPUT

GEOMETRY OF THE STRUT-AND-TIE MODEL

Beam Cross-section geometry

Bars centroid distance from external surface		c [cm]	6.6
Effective depth		d [cm]	73.4

Strut geometry

Strut horizontal length		l [cm]	39
Strut design inclination		ψ [deg]	60
Strut design inclination		ψ [rad]	1.04
Pier edge-strut node distance	0.2d	p [cm]	15
Pier edge-strut node distance	Wp/4	p [cm]	15

VERIFICATION OF THE HORIZONTAL TIE MECHANISM

Axial force tie calculation SLE

Axial force SLE	N_{tk} [KN]	0
Steel stress	σ_s [Mpa]	0

Axial force tie calculation SLU

Axial force SLU	N_{td} [KN]	322
Axial strength	N_{Rd} [KN]	393
Safety margin	N_{Rd}/N_{td}	1.22

Shear strength calculation

Shear strength of compression strut	P_{Rcd} [KN]	2602
Shear strength of steel bars	P_{Rsd} [KN]	672
Design shear strength	P_{Rd} [KN]	672
Safety margin	P_{Rd}/P_{Ed}	1.22

VERIFICATION OF THE DIAGONAL TIE MECHANISM

Diagonal tie mechanism shear strength

Shear strength of compression struts	ΔP_{Rcd} [KN]	0
Shear strength of steel bars	ΔP_{Rsd} [KN]	0
Design shear strength	ΔP_{Rd} [KN]	0
Safety margin	$\Delta P_{Rd}/P_{Ed}$	0.00

VERIFICATION OF THE COMBINED TIE MECHANISM

Shear strength calculation

Design shear strength	$P_{Rd,TOT}$	672
Safety margin	$P_{Rd,TOT}/P_{Ed}$	1.22

Il muro paraghiaia non risulta sollecitato da nessuna forza pertanto la verifica è omessa, si dispone un'armatura con rete elettrodsaldata $\emptyset 10/15x15$

12.5 SPALLA BA-02

La veririca della spalla in oggetto è omessa avendo la stessa geometria delle spalle fisse ma risultando decisamente meno sollecitata essendo spalla mobile.

13. SCALE IN C.A.

13.1 DESCRIZIONE GENERALE DELLE STRUTTURA

Si tratta di due piccole scale in c.a. realizzate in opera mediante due setti verticali ed una soletta inclinata portagradini.

13.2 ANALISI E VERIFICHE

13.2.1 Caratteristiche meccaniche dei materiali

Calcestruzzo armato	
Classe di resistenza	C25/30
Resistenza di progetto a compressione a 28 giorni	$f_{cd} = 0{,}85\frac{f_{ck}}{1{,}5} = 14{,}17\ MPa$
Modulo elastico a 28 giorni	$E_{cm} = 22000\left(\frac{f_{cm}}{10}\right)^{0{,}3} = 31447\ MPa$
Diametro massimo aggregato	25 mm
Copriferro	4,0 cm

Acciaio per barre di armatura (Per tutti i cementi armati)	
Tipo	B450C
Tensione caratteristica di rottura	$f_{tk} \geq 540\ MPa$
Tensione caratteristica di snervamento	$f_{yk} \geq 450\ MPa$
Resistenza di progetto	$f_{yd} = \frac{f_{yk}}{\gamma_s} = \frac{450}{1{,}15} = 391{,}3\ MPa$

13.2.2 Modellazione delle strutture ed analisi

Per le opere in oggetto è stato realizzato un semplice modello F.E.M. elastico lineare con elementi beam monodimensionali a 6 g.d.l.

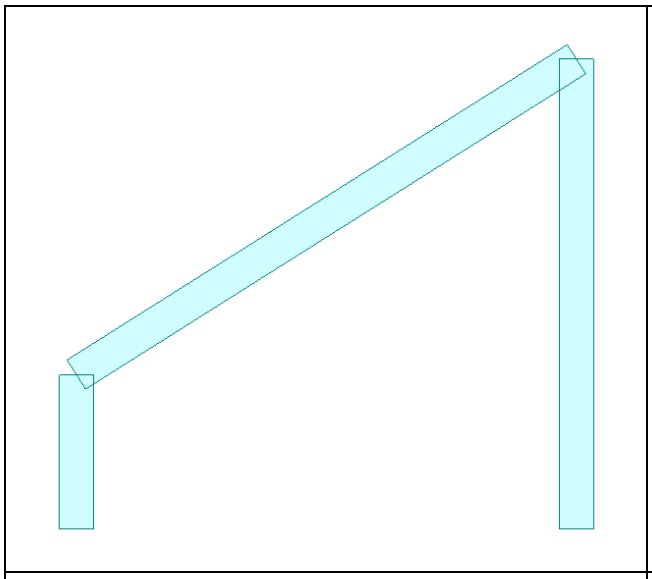

Modello FEM

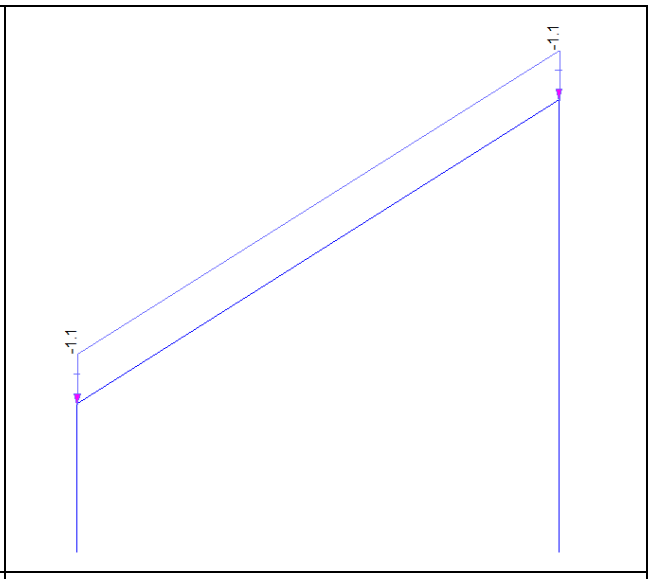

Sovraccarichi permanenti (DL)

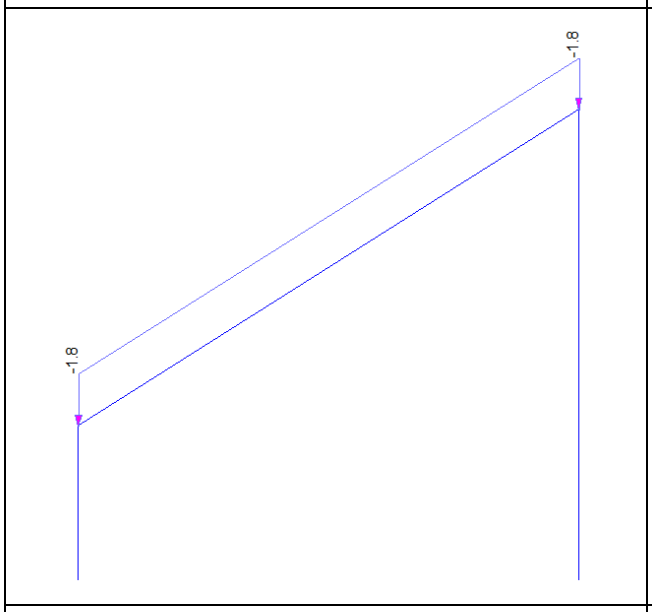

Sovraccarichi d'uso (LL)

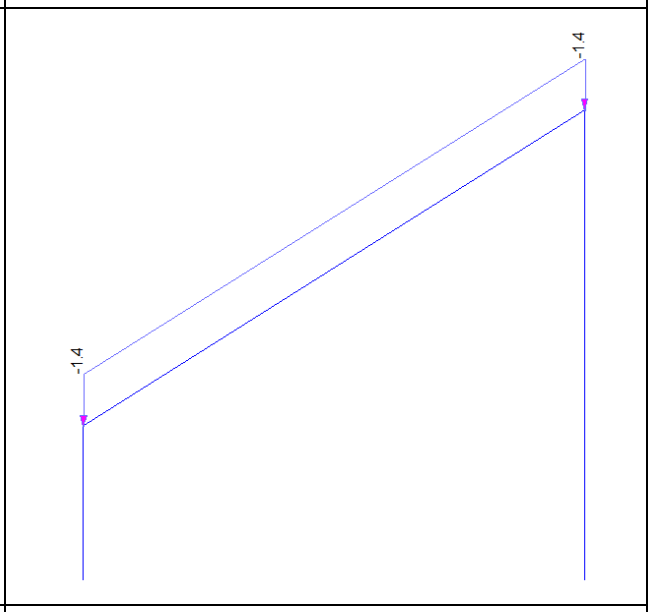

Carico neve (SL)

La struttura è stata vincolata esternamente mediante vincoli fissi su tutti i g.d.l. Sono stati considerati i seguenti carichi:

1. **Pesi propri strutturali (SW)**: considerando un peso del calcestruzzo armato di $25\ kN/m^3$
2. **Sovraccarichi permanenti (DL)**: il peso dei gradini portati sulla soletta
3. **Sovraccarichi d'uso (LL)**: si è considerato un sovraccarico d'uso di cat.A pari a $2.0\ kN/m^2$
4. **Carico neve (SL)**: si è considerato un sovraccarico pari a $1.58\ kN/m^2$ in accordo al paragrafo 9.3.2.3. del presente elaborato.

Sono state inoltre effettuate le seguenti combinazioni di carico:

1	cLCB1	1.3(SW+DL) + 1.5(1.0LL)
2	cLCB2	1.3(SW+DL) + 1.5(1.0LL) + 1.5(0.5SL)
3	cLCB3	1.3(SW+DL) + 1.5(0.7LL) + 1.5(1.0SL)
4	cLCB4R	1.0(SW+DL) + (1.0LL)
5	cLCB5R	1.0(SW+DL) + (1.0LL) + (0.5SL)
6	cLCB6R	1.0(SW+DL) + (0.7LL) + (1.0SL)
7	cLCB7F	1.0(SW+DL) + (0.5LL)
8	cLCB8F	1.0(SW+DL) + (0.3LL) + (0.2SL)
9	cLCB9Q	1.0(SW+DL) + (0.3LL)

Vengono di seguito mostrate le caratteristiche di sollecitazione relative agli inviluppi per gli SLU e SLE

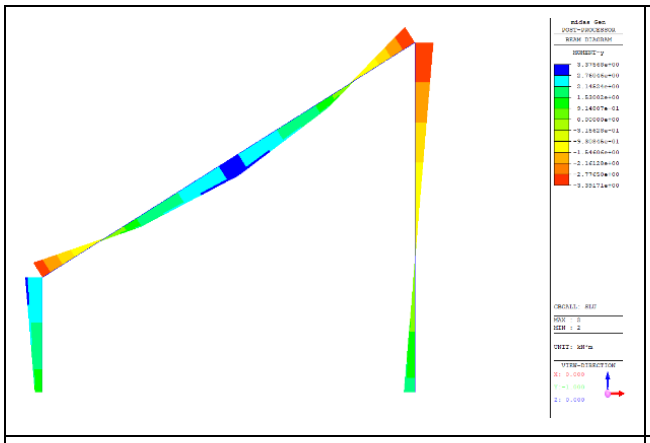

Inviluppo SLU - M

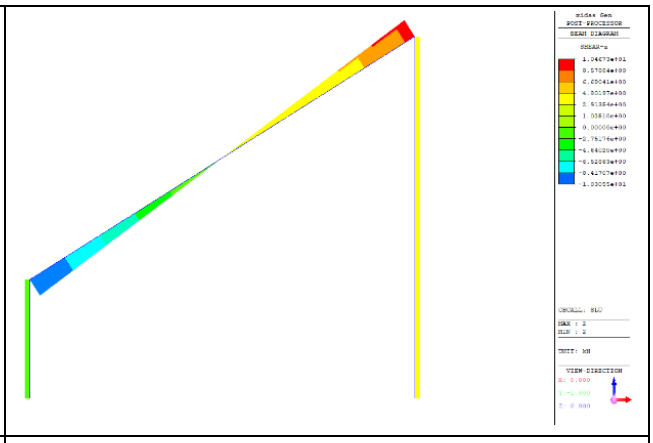

Inviluppo SLU - T

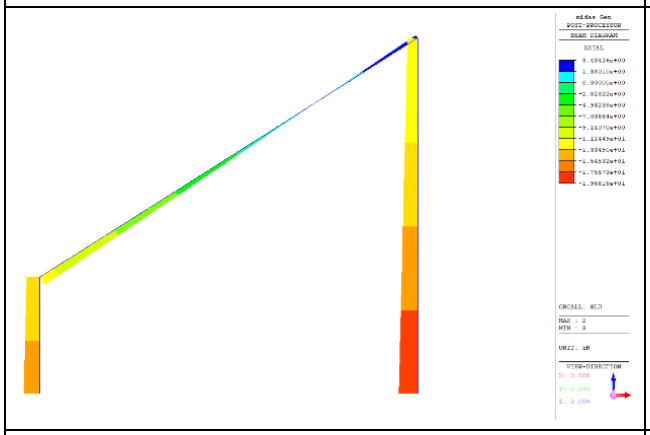

Inviluppo SLU - N

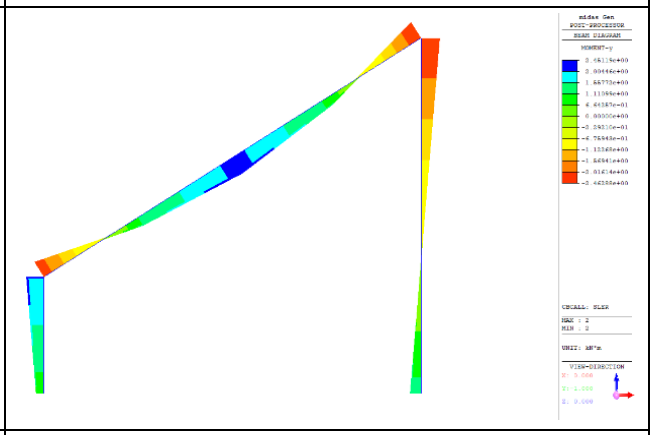

Inviluppo SLE R - M

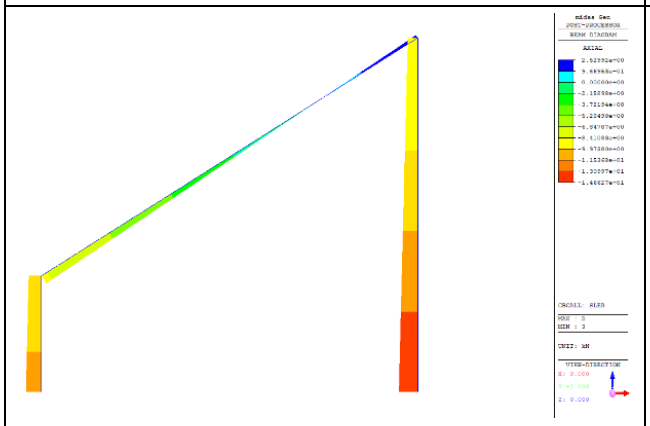

Inviluppo SLE R - N

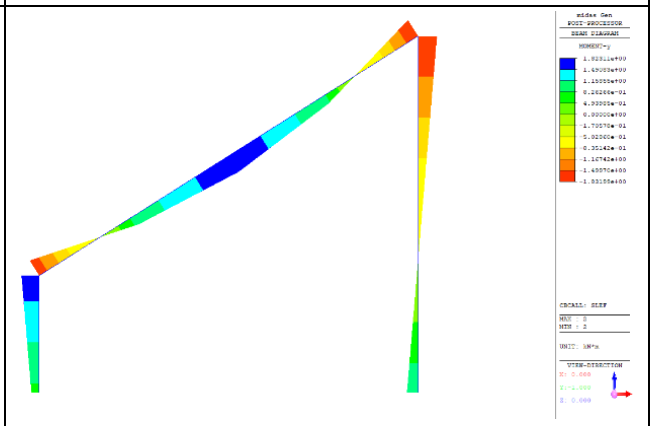

Inviluppo SLE F - M

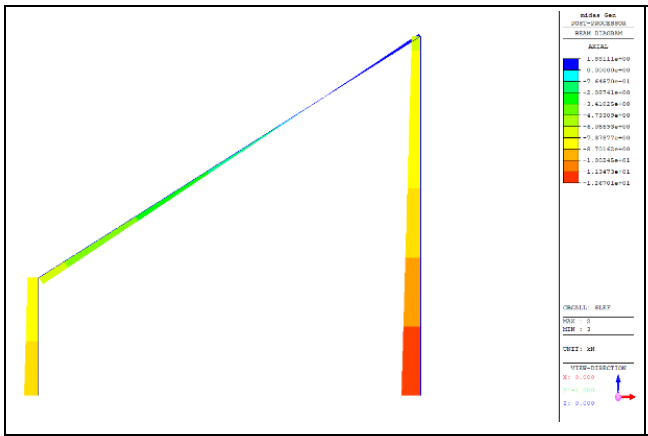

Inviluppo SLE F - N

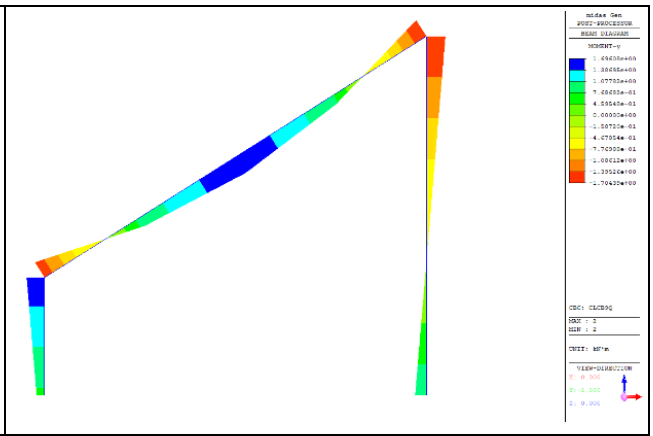

Inviluppo SLE QP - M

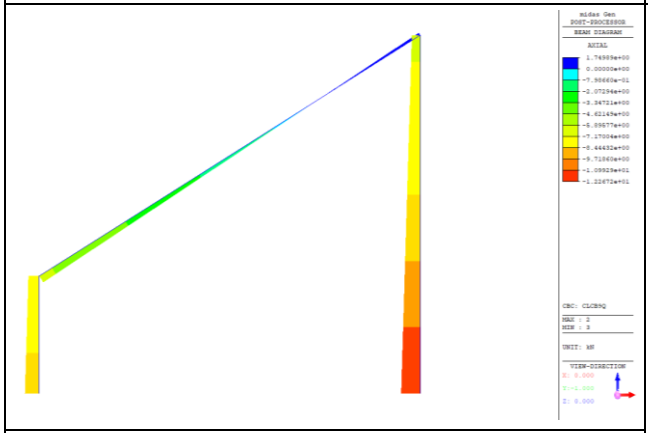

Inviluppo SLE QP - N

13.2.3 Verifica sezione in mezzeria della soletta

Scala - sezione soletta in mezzeria

INPUT

SOLLECITAZIONI DI VERIFICA

Combinazione	N_{Sd} [kN]	M_{Sd} [kNm]	V_{Sd} [kN]
SLE Quasi Permanente	-0.7	1.7	-
SLE Frequente	-1.7	1.9	-
SLE Rara	-2.0	2.5	-
SLU	-2.0	3.4	10.0
SLV	0.0	0.0	0.0

CARATTERISTICHE GEOMETRICHE DELLA SEZIONE IN C.A.

Geometria della sezione		
Base (ortogonale al Taglio)	B [cm]	90
Altezza (parallela al Taglio)	H [cm]	15
Altezza utile della sezione	d [cm]	11
Area di calcestruzzo	A_c [cm^2]	1350

Armatura longitudinale tesa		1° STRATO	2° STRATO	3° STRATO
Numero Barre	n	3	0	0
Diametro	ϕ [mm]	8	16	0
Posizione dal lembo esterno	c [cm]	4.0	15.0	0.0
Area strato	As [cm^2]	1.51	0.00	0.00
Rapporto di armatura	ρ [%]		0.152%	

Armatura longitudinale compressa		1° STRATO	2° STRATO	3° STRATO
Numero Barre	n	3	0	0
Diametro	ϕ [mm]	8	24	0
Posizione dal lembo esterno	c' [cm]	4.0	0.0	0.0
Area strato	As' [cm^2]	1.51	0.00	0.00
Rapporto di armatura	ρ' [%]		0.152%	

Armatura trasversale		1° TIPO	2° TIPO	3° TIPO
Diametro	ϕ [mm]	8	0	0
Numero bracci	n_{bi}	4	0	0
Passo	s_w [cm]	40	0	0
Inclinazione	α [deg]	90	90	90
Area armatura a metro	A_{sw}/s_w [cm^2/m]	5.03	0.00	0.00

CARATTERISTICHE REOLOGICHE DEI MATERIALI

Concrete		
Resistenza cubica a compressione	RCK	30
Resistenza cilindrica caratteristica a compressione	f_{ck} [Mpa]	25.00
Resistenza cilindrica media a compressione	f_{cm} [Mpa]	33.00
Resistenza media a trazione per flessione	f_{ctm} [Mpa]	2.56
Resistenza caratteristica a trazione per flessione	f_{ctk} [Mpa]	1.80
Resistenza di progetto a compressione	f_{cd} [Mpa]	14.17
Resistenza di progetto delle bielle compresse	$f_{cd'}$ [Mpa]	7.65

Acciaio		
Resistenza di progetto a snervamento	f_{yd} [Mpa]	391.30

OUTPUT

VERIFICHE IN ESERCIZIO

Verifica Tensionale			σ limit
Calcestruzzo SLE Quasi Permanente	σ_c [Mpa] =	1.80	10.000
Calcestruzzo SLE Rara	σ_c [Mpa] =	2.64	13.750
Acciaio SLE Rara	σ_s [Mpa] =	144.96	337.500

Verifica di fessurazione			w limit
Combinazione SLE Quasi permanente	w_d [mm] =	0.000	0.200
Combinazione SLE Frequente	w_d [mm] =	0.000	0.300

VERIFICA DI RESISTENZA A TAGLIO

Sollecitazioni di progetto		
Taglio sollecitante = max Taglio(SLU,SLV)	V_{Sd} [kN]	10.0
Sforzo Normale concomitante al massimo taglio	N_{Sd} [kN]	-2.0

Verifica di resistenza in assenza di armatura specifica		
Resistenza di progetto senza armatura specifica	V_{Rd1} [KN]	49.22
Coefficiente di sicurezza	V_{Rd1}/V_{Sd}	4.92

Verifica di resistenza dell'armatura specifica		
CoTan(θ) di progetto	cotan(θ)	2.5
Resistenza a taglio delle bielle compresse in cls	V_{Rd2}(θ) [KN]	235
Resistenza a taglio dell'armatura	V_{Rd3}(θ) [KN]	49
Resistenza a taglio di progetto	V_{Rd} [KN]	49
Coefficiente di sicurezza	V_{Rd}/V_{Sd}	4.87

VERIFICA DI RESISTENZA A PRESSO-FLESSIONE

Sollecitazioni di progetto		SLU	SLV
Momento sollecitante	M_{Sd} [kNm]	3.4	0.0
Sforzo Normale concomitante	N_{Sd} [kN]	-2.0	0.0

Verifica di resistenza in termini di momento		SLU	SLV
Momento resistente	M_{Rd} [kNm]	8.4	8.3
Coefficiente di sicurezza	M_{Rd}/M_{Sd}	2.50	-

Verifica di resistenza in termini di sforzo normale		SLU	SLV
Sforzo normale resistente	N_{Rd} [kN]	-	-
Coefficiente di sicurezza	N_{Rd}/N_{Sd}	-	-

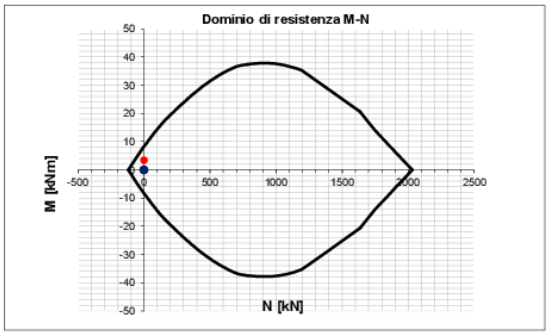

Data l'entità ridotta delle sollecitazioni, basterà armare la soletta con barre di diametro 8mm su entrambe le faccie e nelle due direzioni.

13.2.4 Incidenza di armatura

L'incidenza risulta pari a 40kg/mc.

14. APPENDICE – OUTPUT DI CALCOLO

```
/ ____________________________________________________________________________
/ Straus7 MODEL EXCHANGE FILE
/ TIMESTAMP: 9:38:25 am, 15 March 2023

/ ____________________________________________________________________________
/ MODEL INFORMATION

   FileFormat           Straus7.2.4.6
   ModelName            "Modello_Passerella_R10"
   Title                ""
   Project              ""
   Author               ""
   Reference            ""
   Comments             ""

/ ____________________________________________________________________________
/ UNITS

   LengthUnit           m
   MassUnit             kg
   EnergyUnit           J
   PressureUnit         MPa
   ForceUnit            kN
   TemperatureUnit      C

/ ____________________________________________________________________________
/ GROUP DEFINITIONS

   Group                    1    16711680   "\\Model"
   Group                    2     3355647   "Travi_Principali"
   Group                    3    16724812   "Travi_Principali\DX_1"
   Group                    4    16777011   "Travi_Principali\DX_2"
   Group                    5     8401919   "Travi_Principali\SX_1"
   Group                    6    13382655   "Travi_Principali\SX_2"
   Group                    7    11730739   "Traversi"
   Group                    8     3407692   "Montanti"
   Group                    9    16757299   "Travi copertura"
   Group                   10     6750003   "UPN300"
   Group                   17     3407769   "PBR"
   Group                   11    16777011   "MODELING"
   Group                   12    15085194   "MODELING\RLxyz"
   Group                   13     8401919   "MODELING\LOAD_PATCH"
   Group                   14     3407769   "MODELING\LOAD_PATCH\Centrali"
   Group                   15    15096878   "MODELING\LOAD_PATCH\Interno"
   Group                   16     3026662   "MODELING\LOAD_PATCH\Esterno"

/ ____________________________________________________________________________
/ FREEDOM CASE DEFINITIONS

   FreedomCase              1       0       1   "-"


/ ____________________________________________________________________________
/ LOAD CASE DEFINITIONS
```

```
   LoadCase                 1       1   "G00 - Peso Proprio"
     Gravity                3    -9.81000000000000E+0
     LCInclude              1

   LoadCase                 2       1   "G01 - Carico Permanente soletta"
     Gravity                3    -9.81000000000000E+0
     LCInclude              2

   LoadCase                 3       1   "G02a - Carico Pannelli Fonoassorbenti"
     Gravity                3    -9.81000000000000E+0
     LCInclude              2

   LoadCase                 4       1   "G02b - Carico Pannelli Fonoassorbenti
DX"
     Gravity                3    -9.81000000000000E+0
     LCInclude              2

   LoadCase                 5       1   "Q00 - Sovraccarico Accidentale"
     Gravity                3    -9.81000000000000E+0
     LCInclude              2

   LoadCase                 6       0   "Q01 - Carico Neve"
     LCInclude              3

   LoadCase                 7       0   "Q02a - Carico Vento Y+"
     LCInclude              3

   LoadCase                 9       0   "Q02b - Carico Vento Y-"
     LCInclude              3

   LoadCase                 8       0   "Q03a - Effetti Aerodinamici Convogli
Y+"
     LCInclude              3

   LoadCase                10       0   "Q03b - Effetti Aerodinamici Convogli
Y-"
     LCInclude              3

   LoadCase                11       0   "T00 - DTu = +25°C"
     LCInclude              3

   LoadCase                12       0   "T01 - DTu = -25°C"
     LCInclude              3


/ ____________________________________________________________________________
/ LOAD CASE COMBINATIONS

   LoadCaseCombination      13   "SLU_000"
      1    1    1.35000000000000E+0
      2    1    1.35000000000000E+0
      3    1    1.50000000000000E+0
```

```
LoadCaseCombination      14   "SLU_001"
   1    1    1.35000000000000E+0
   2    1    1.35000000000000E+0
   4    1    1.50000000000000E+0

LoadCaseCombination      15   "SLU_01"
   1    1    1.35000000000000E+0
   2    1    1.35000000000000E+0
   3    1    1.50000000000000E+0
   5    1    1.50000000000000E+0

LoadCaseCombination      16   "SLU_02"
   1    1    1.35000000000000E+0
   2    1    1.35000000000000E+0
   4    1    1.50000000000000E+0
   5    1    1.50000000000000E+0

LoadCaseCombination      17   "SLU_03"
   1    1    1.35000000000000E+0
   2    1    1.35000000000000E+0
   3    1    1.50000000000000E+0
   6    1    1.50000000000000E+0

LoadCaseCombination      18   "SLU_04"
   1    1    1.35000000000000E+0
   2    1    1.35000000000000E+0
   4    1    1.50000000000000E+0
   6    1    1.50000000000000E+0

LoadCaseCombination      19   "SLU_05"
   1    1    1.35000000000000E+0
   2    1    1.35000000000000E+0
   3    1    1.50000000000000E+0
   7    1    1.50000000000000E+0

LoadCaseCombination      20   "SLU_06"
   1    1    1.35000000000000E+0
   2    1    1.35000000000000E+0
   4    1    1.50000000000000E+0
   7    1    1.50000000000000E+0

LoadCaseCombination      21   "SLU_07"
   1    1    1.35000000000000E+0
   2    1    1.35000000000000E+0
   3    1    1.50000000000000E+0
   9    1    1.50000000000000E+0

LoadCaseCombination      22   "SLU_08"
   1    1    1.35000000000000E+0
   2    1    1.35000000000000E+0
   4    1    1.50000000000000E+0
   9    1    1.50000000000000E+0

LoadCaseCombination      23   "SLU_09"
```

```
   1    1    1.35000000000000E+0
   2    1    1.35000000000000E+0
   3    1    1.50000000000000E+0
   8    1    1.45000000000000E+0

LoadCaseCombination      24   "SLU_10"
   1    1    1.35000000000000E+0
   2    1    1.35000000000000E+0
   4    1    1.50000000000000E+0
   8    1    1.45000000000000E+0

LoadCaseCombination      25   "SLU_11"
   1    1    1.35000000000000E+0
   2    1    1.35000000000000E+0
   3    1    1.50000000000000E+0
   10    1    1.45000000000000E+0

LoadCaseCombination      26   "SLU_12"
   1    1    1.35000000000000E+0
   2    1    1.35000000000000E+0
   4    1    1.50000000000000E+0
   10    1    1.45000000000000E+0

LoadCaseCombination      27   "SLU_13"
   1    1    1.35000000000000E+0
   2    1    1.35000000000000E+0
   3    1    1.50000000000000E+0
   11    1    1.50000000000000E+0

LoadCaseCombination      28   "SLU_14"
   1    1    1.35000000000000E+0
   2    1    1.35000000000000E+0
   4    1    1.50000000000000E+0
   11    1    1.50000000000000E+0

LoadCaseCombination      29   "SLU_15"
   1    1    1.35000000000000E+0
   2    1    1.35000000000000E+0
   3    1    1.50000000000000E+0
   12    1    1.50000000000000E+0

LoadCaseCombination      30   "SLU_16"
   1    1    1.35000000000000E+0
   2    1    1.35000000000000E+0
   4    1    1.50000000000000E+0
   12    1    1.50000000000000E+0

LoadCaseCombination      31   "SLU_17"
   1    1    1.35000000000000E+0
   2    1    1.35000000000000E+0
   3    1    1.50000000000000E+0
   5    1    1.50000000000000E+0
   7    1    9.00000000000000E-1
```

```
LoadCaseCombination      32   "SLU_18"
   1    1    1.35000000000000E+0
   2    1    1.35000000000000E+0
   4    1    1.50000000000000E+0
   5    1    1.50000000000000E+0
   7    1    9.00000000000000E-1

LoadCaseCombination      33   "SLU_19"
   1    1    1.35000000000000E+0
   2    1    1.35000000000000E+0
   3    1    1.50000000000000E+0
   5    1    1.50000000000000E+0
   9    1    9.00000000000000E-1

LoadCaseCombination      34   "SLU_20"
   1    1    1.35000000000000E+0
   2    1    1.35000000000000E+0
   4    1    1.50000000000000E+0
   5    1    1.50000000000000E+0
   9    1    9.00000000000000E-1

LoadCaseCombination      35   "SLU_21"
   1    1    1.35000000000000E+0
   2    1    1.35000000000000E+0
   3    1    1.50000000000000E+0
   5    1    1.50000000000000E+0
   11    1    9.00000000000000E-1

LoadCaseCombination      36   "SLU_22"
   1    1    1.35000000000000E+0
   2    1    1.35000000000000E+0
   4    1    1.50000000000000E+0
   5    1    1.50000000000000E+0
   11    1    9.00000000000000E-1

LoadCaseCombination      37   "SLU_23"
   1    1    1.35000000000000E+0
   2    1    1.35000000000000E+0
   3    1    1.50000000000000E+0
   5    1    1.50000000000000E+0
   12    1    9.00000000000000E-1

LoadCaseCombination      38   "SLU_24"
   1    1    1.35000000000000E+0
   2    1    1.35000000000000E+0
   4    1    1.50000000000000E+0
   5    1    1.50000000000000E+0
   12    1    9.00000000000000E-1

LoadCaseCombination      39   "SLU_25"
   1    1    1.35000000000000E+0
   2    1    1.35000000000000E+0
   3    1    1.50000000000000E+0
   5    1    1.50000000000000E+0
```

```
   7    1    9.00000000000000E-1
   11    1    9.00000000000000E-1

LoadCaseCombination      40   "SLU_26"
   1    1    1.35000000000000E+0
   2    1    1.35000000000000E+0
   4    1    1.50000000000000E+0
   5    1    1.50000000000000E+0
   7    1    9.00000000000000E-1
   11    1    9.00000000000000E-1

LoadCaseCombination      41   "SLU_27"
   1    1    1.35000000000000E+0
   2    1    1.35000000000000E+0
   3    1    1.50000000000000E+0
   5    1    1.50000000000000E+0
   9    1    9.00000000000000E-1
   12    1    9.00000000000000E-1

LoadCaseCombination      42   "SLU_28"
   1    1    1.35000000000000E+0
   2    1    1.35000000000000E+0
   4    1    1.50000000000000E+0
   5    1    1.50000000000000E+0
   9    1    9.00000000000000E-1
   12    1    9.00000000000000E-1

LoadCaseCombination      43   "SLU_29"
   1    1    1.35000000000000E+0
   2    1    1.35000000000000E+0
   3    1    1.50000000000000E+0
   6    1    1.50000000000000E+0
   7    1    9.00000000000000E-1

LoadCaseCombination      44   "SLU_30"
   1    1    1.35000000000000E+0
   2    1    1.35000000000000E+0
   4    1    1.50000000000000E+0
   6    1    1.50000000000000E+0
   7    1    9.00000000000000E-1

LoadCaseCombination      45   "SLU_31"
   1    1    1.35000000000000E+0
   2    1    1.35000000000000E+0
   3    1    1.50000000000000E+0
   6    1    1.50000000000000E+0
   9    1    9.00000000000000E-1

LoadCaseCombination      46   "SLU_32"
   1    1    1.35000000000000E+0
   2    1    1.35000000000000E+0
   4    1    1.50000000000000E+0
   6    1    1.50000000000000E+0
   9    1    9.00000000000000E-1
```

```
LoadCaseCombination      47   "SLU_33"
   1    1    1.35000000000000E+0
   2    1    1.35000000000000E+0
   3    1    1.50000000000000E+0
   6    1    1.50000000000000E+0
   8    1    1.16000000000000E+0

LoadCaseCombination      48   "SLU_34"
   1    1    1.35000000000000E+0
   2    1    1.35000000000000E+0
   4    1    1.50000000000000E+0
   6    1    1.50000000000000E+0
   8    1    1.16000000000000E+0

LoadCaseCombination      49   "SLU_35"
   1    1    1.35000000000000E+0
   2    1    1.35000000000000E+0
   3    1    1.50000000000000E+0
   6    1    1.50000000000000E+0
   10    1    1.16000000000000E+0

LoadCaseCombination      50   "SLU_36"
   1    1    1.35000000000000E+0
   2    1    1.35000000000000E+0
   4    1    1.50000000000000E+0
   6    1    1.50000000000000E+0
   10    1    1.16000000000000E+0

LoadCaseCombination      51   "SLU_37"
   1    1    1.35000000000000E+0
   2    1    1.35000000000000E+0
   3    1    1.50000000000000E+0
   6    1    1.50000000000000E+0
   11    1    9.00000000000000E-1

LoadCaseCombination      52   "SLU_38"
   1    1    1.35000000000000E+0
   2    1    1.35000000000000E+0
   4    1    1.50000000000000E+0
   6    1    1.50000000000000E+0
   11    1    9.00000000000000E-1

LoadCaseCombination      53   "SLU_39"
   1    1    1.35000000000000E+0
   2    1    1.35000000000000E+0
   3    1    1.50000000000000E+0
   6    1    1.50000000000000E+0
   12    1    9.00000000000000E-1

LoadCaseCombination      54   "SLU_40"
   1    1    1.35000000000000E+0
   2    1    1.35000000000000E+0
   4    1    1.50000000000000E+0
```

```
   6    1    1.50000000000000E+0
   12    1    9.00000000000000E-1

LoadCaseCombination      55   "SLU_41"
   1    1    1.35000000000000E+0
   2    1    1.35000000000000E+0
   3    1    1.50000000000000E+0
   6    1    1.50000000000000E+0
   7    1    9.00000000000000E-1
   8    1    1.16000000000000E+0

LoadCaseCombination      56   "SLU_42"
   1    1    1.35000000000000E+0
   2    1    1.35000000000000E+0
   4    1    1.50000000000000E+0
   6    1    1.50000000000000E+0
   7    1    9.00000000000000E-1
   8    1    1.16000000000000E+0

LoadCaseCombination      57   "SLU_43"
   1    1    1.35000000000000E+0
   2    1    1.35000000000000E+0
   3    1    1.50000000000000E+0
   6    1    1.50000000000000E+0
   9    1    9.00000000000000E-1
   10    1    1.16000000000000E+0

LoadCaseCombination      58   "SLU_44"
   1    1    1.35000000000000E+0
   2    1    1.35000000000000E+0
   4    1    1.50000000000000E+0
   6    1    1.50000000000000E+0
   9    1    9.00000000000000E-1
   10    1    1.16000000000000E+0

LoadCaseCombination      59   "SLU_45"
   1    1    1.35000000000000E+0
   2    1    1.35000000000000E+0
   3    1    1.50000000000000E+0
   6    1    1.50000000000000E+0
   7    1    9.00000000000000E-1
   11    1    9.00000000000000E-1

LoadCaseCombination      60   "SLU_46"
   1    1    1.35000000000000E+0
   2    1    1.35000000000000E+0
   4    1    1.50000000000000E+0
   6    1    1.50000000000000E+0
   7    1    9.00000000000000E-1
   11    1    9.00000000000000E-1

LoadCaseCombination      61   "SLU_47"
   1    1    1.35000000000000E+0
   2    1    1.35000000000000E+0
```

```
   3    1    1.50000000000000E+0
   6    1    1.50000000000000E+0
   9    1    9.00000000000000E-1
   12    1    9.00000000000000E-1

LoadCaseCombination      62   "SLU_48"
   1    1    1.35000000000000E+0
   2    1    1.35000000000000E+0
   4    1    1.50000000000000E+0
   6    1    1.50000000000000E+0
   9    1    9.00000000000000E-1
   12    1    9.00000000000000E-1

LoadCaseCombination      63   "SLU_49"
   1    1    1.35000000000000E+0
   2    1    1.35000000000000E+0
   3    1    1.50000000000000E+0
   6    1    1.50000000000000E+0
   8    1    1.16000000000000E+0
   11    1    9.00000000000000E-1

LoadCaseCombination      64   "SLU_50"
   1    1    1.35000000000000E+0
   2    1    1.35000000000000E+0
   4    1    1.50000000000000E+0
   6    1    1.50000000000000E+0
   8    1    1.16000000000000E+0
   11    1    9.00000000000000E-1

LoadCaseCombination      65   "SLU_51"
   1    1    1.35000000000000E+0
   2    1    1.35000000000000E+0
   3    1    1.50000000000000E+0
   6    1    1.50000000000000E+0
   10    1    1.16000000000000E+0
   12    1    9.00000000000000E-1

LoadCaseCombination      66   "SLU_52"
   1    1    1.35000000000000E+0
   2    1    1.35000000000000E+0
   4    1    1.50000000000000E+0
   6    1    1.50000000000000E+0
   10    1    1.16000000000000E+0
   12    1    9.00000000000000E-1

LoadCaseCombination      67   "SLU_53"
   1    1    1.35000000000000E+0
   2    1    1.35000000000000E+0
   3    1    1.50000000000000E+0
   6    1    1.50000000000000E+0
   7    1    9.00000000000000E-1
   8    1    1.16000000000000E+0
   11    1    9.00000000000000E-1
```

```
LoadCaseCombination      68   "SLU_54"
   1    1    1.35000000000000E+0
   2    1    1.35000000000000E+0
   4    1    1.50000000000000E+0
   6    1    1.50000000000000E+0
   7    1    9.00000000000000E-1
   8    1    1.16000000000000E+0
   11    1    9.00000000000000E-1

LoadCaseCombination      69   "SLU_55"
   1    1    1.35000000000000E+0
   2    1    1.35000000000000E+0
   3    1    1.50000000000000E+0
   6    1    1.50000000000000E+0
   9    1    9.00000000000000E-1
   10    1    1.16000000000000E+0
   12    1    9.00000000000000E-1

LoadCaseCombination      70   "SLU_56"
   1    1    1.35000000000000E+0
   2    1    1.35000000000000E+0
   4    1    1.50000000000000E+0
   6    1    1.50000000000000E+0
   9    1    9.00000000000000E-1
   10    1    1.16000000000000E+0
   12    1    9.00000000000000E-1

LoadCaseCombination      71   "SLU_57"
   1    1    1.35000000000000E+0
   2    1    1.35000000000000E+0
   3    1    1.50000000000000E+0
   6    1    1.05000000000000E+0
   7    1    1.50000000000000E+0

LoadCaseCombination      72   "SLU_58"
   1    1    1.35000000000000E+0
   2    1    1.35000000000000E+0
   4    1    1.50000000000000E+0
   6    1    1.05000000000000E+0
   7    1    1.50000000000000E+0

LoadCaseCombination      73   "SLU_59"
   1    1    1.35000000000000E+0
   2    1    1.35000000000000E+0
   3    1    1.50000000000000E+0
   6    1    1.05000000000000E+0
   9    1    1.50000000000000E+0

LoadCaseCombination      74   "SLU_60"
   1    1    1.35000000000000E+0
   2    1    1.35000000000000E+0
   4    1    1.50000000000000E+0
   6    1    1.05000000000000E+0
   9    1    1.50000000000000E+0
```

```
LoadCaseCombination      75   "SLU_61"
   1    1    1.35000000000000E+0
   2    1    1.35000000000000E+0
   3    1    1.50000000000000E+0
   7    1    1.50000000000000E+0
   8    1    1.16000000000000E+0

LoadCaseCombination      76   "SLU_62"
   1    1    1.35000000000000E+0
   2    1    1.35000000000000E+0
   4    1    1.50000000000000E+0
   7    1    1.50000000000000E+0
   8    1    1.16000000000000E+0

LoadCaseCombination      77   "SLU_63"
   1    1    1.35000000000000E+0
   2    1    1.35000000000000E+0
   3    1    1.50000000000000E+0
   9    1    1.50000000000000E+0
   8    1    1.16000000000000E+0

LoadCaseCombination      78   "SLU_64"
   1    1    1.35000000000000E+0
   2    1    1.35000000000000E+0
   4    1    1.50000000000000E+0
   9    1    1.50000000000000E+0
   8    1    1.16000000000000E+0

LoadCaseCombination      79   "SLU_65"
   1    1    1.35000000000000E+0
   2    1    1.35000000000000E+0
   3    1    1.50000000000000E+0
   7    1    1.50000000000000E+0
   10    1    1.16000000000000E+0

LoadCaseCombination      80   "SLU_66"
   1    1    1.35000000000000E+0
   2    1    1.35000000000000E+0
   4    1    1.50000000000000E+0
   7    1    1.50000000000000E+0
   10    1    1.16000000000000E+0

LoadCaseCombination      81   "SLU_67"
   1    1    1.35000000000000E+0
   2    1    1.35000000000000E+0
   3    1    1.50000000000000E+0
   9    1    1.50000000000000E+0
   10    1    1.16000000000000E+0

LoadCaseCombination      82   "SLU_68"
   1    1    1.35000000000000E+0
   2    1    1.35000000000000E+0
   4    1    1.50000000000000E+0
```

```
   9    1    1.50000000000000E+0
   10    1    1.16000000000000E+0

LoadCaseCombination      83   "SLU_69"
   1    1    1.35000000000000E+0
   2    1    1.35000000000000E+0
   3    1    1.50000000000000E+0
   7    1    1.50000000000000E+0
   11    1    9.00000000000000E-1

LoadCaseCombination      84   "SLU_70"
   1    1    1.35000000000000E+0
   2    1    1.35000000000000E+0
   4    1    1.50000000000000E+0
   7    1    1.50000000000000E+0
   11    1    9.00000000000000E-1

LoadCaseCombination      85   "SLU_71"
   1    1    1.35000000000000E+0
   2    1    1.35000000000000E+0
   3    1    1.50000000000000E+0
   9    1    1.50000000000000E+0
   11    1    9.00000000000000E-1

LoadCaseCombination      86   "SLU_72"
   1    1    1.35000000000000E+0
   2    1    1.35000000000000E+0
   4    1    1.50000000000000E+0
   9    1    1.50000000000000E+0
   11    1    9.00000000000000E-1

LoadCaseCombination      87   "SLU_73"
   1    1    1.35000000000000E+0
   2    1    1.35000000000000E+0
   3    1    1.50000000000000E+0
   7    1    1.50000000000000E+0
   12    1    9.00000000000000E-1

LoadCaseCombination      88   "SLU_74"
   1    1    1.35000000000000E+0
   2    1    1.35000000000000E+0
   4    1    1.50000000000000E+0
   7    1    1.50000000000000E+0
   12    1    9.00000000000000E-1

LoadCaseCombination      89   "SLU_75"
   1    1    1.35000000000000E+0
   2    1    1.35000000000000E+0
   3    1    1.50000000000000E+0
   9    1    1.50000000000000E+0
   12    1    9.00000000000000E-1

LoadCaseCombination      90   "SLU_76"
   1    1    1.35000000000000E+0
```

```
   2    1    1.35000000000000E+0
   4    1    1.50000000000000E+0
   9    1    1.50000000000000E+0
   12    1    9.00000000000000E-1

LoadCaseCombination      91   "SLU_77"
   1    1    1.35000000000000E+0
   2    1    1.35000000000000E+0
   3    1    1.50000000000000E+0
   6    1    1.05000000000000E+0
   7    1    1.50000000000000E+0
   8    1    1.16000000000000E+0

LoadCaseCombination      92   "SLU_78"
   1    1    1.35000000000000E+0
   2    1    1.35000000000000E+0
   4    1    1.50000000000000E+0
   6    1    1.05000000000000E+0
   7    1    1.50000000000000E+0
   8    1    1.16000000000000E+0

LoadCaseCombination      93   "SLU_79"
   1    1    1.35000000000000E+0
   2    1    1.35000000000000E+0
   3    1    1.50000000000000E+0
   6    1    1.05000000000000E+0
   9    1    1.50000000000000E+0
   8    1    1.16000000000000E+0

LoadCaseCombination      94   "SLU_80"
   1    1    1.35000000000000E+0
   2    1    1.35000000000000E+0
   4    1    1.50000000000000E+0
   6    1    1.05000000000000E+0
   9    1    1.50000000000000E+0
   8    1    1.16000000000000E+0

LoadCaseCombination      95   "SLU_81"
   1    1    1.35000000000000E+0
   2    1    1.35000000000000E+0
   3    1    1.50000000000000E+0
   6    1    1.05000000000000E+0
   7    1    1.50000000000000E+0
   10    1    1.16000000000000E+0

LoadCaseCombination      96   "SLU_82"
   1    1    1.35000000000000E+0
   2    1    1.35000000000000E+0
   4    1    1.50000000000000E+0
   6    1    1.05000000000000E+0
   7    1    1.50000000000000E+0
   10    1    1.16000000000000E+0

LoadCaseCombination      97   "SLU_83"
```

```
   1    1    1.35000000000000E+0
   2    1    1.35000000000000E+0
   3    1    1.50000000000000E+0
   6    1    1.05000000000000E+0
   9    1    1.50000000000000E+0
   10    1    1.16000000000000E+0

LoadCaseCombination      98   "SLU_84"
   1    1    1.35000000000000E+0
   2    1    1.35000000000000E+0
   4    1    1.50000000000000E+0
   6    1    1.05000000000000E+0
   9    1    1.50000000000000E+0
   10    1    1.16000000000000E+0

LoadCaseCombination      99   "SLU_85"
   1    1    1.35000000000000E+0
   2    1    1.35000000000000E+0
   3    1    1.50000000000000E+0
   6    1    1.05000000000000E+0
   7    1    1.50000000000000E+0
   11    1    9.00000000000000E-1

LoadCaseCombination     100   "SLU_86"
   1    1    1.35000000000000E+0
   2    1    1.35000000000000E+0
   4    1    1.50000000000000E+0
   6    1    1.05000000000000E+0
   7    1    1.50000000000000E+0
   11    1    9.00000000000000E-1

LoadCaseCombination     101   "SLU_87"
   1    1    1.35000000000000E+0
   2    1    1.35000000000000E+0
   3    1    1.50000000000000E+0
   6    1    1.05000000000000E+0
   9    1    1.50000000000000E+0
   11    1    9.00000000000000E-1

LoadCaseCombination     102   "SLU_88"
   1    1    1.35000000000000E+0
   2    1    1.35000000000000E+0
   4    1    1.50000000000000E+0
   6    1    1.05000000000000E+0
   9    1    1.50000000000000E+0
   11    1    9.00000000000000E-1

LoadCaseCombination     103   "SLU_89"
   1    1    1.35000000000000E+0
   2    1    1.35000000000000E+0
   3    1    1.50000000000000E+0
   6    1    1.05000000000000E+0
   7    1    1.50000000000000E+0
   12    1    9.00000000000000E-1
```

```
LoadCaseCombination     104   "SLU_90"
   1    1    1.35000000000000E+0
   2    1    1.35000000000000E+0
   4    1    1.50000000000000E+0
   6    1    1.05000000000000E+0
   7    1    1.50000000000000E+0
   12    1    9.00000000000000E-1

LoadCaseCombination     105   "SLU_91"
   1    1    1.35000000000000E+0
   2    1    1.35000000000000E+0
   3    1    1.50000000000000E+0
   6    1    1.05000000000000E+0
   9    1    1.50000000000000E+0
   12    1    9.00000000000000E-1

LoadCaseCombination     106   "SLU_92"
   1    1    1.35000000000000E+0
   2    1    1.35000000000000E+0
   4    1    1.50000000000000E+0
   6    1    1.05000000000000E+0
   9    1    1.50000000000000E+0
   12    1    9.00000000000000E-1

LoadCaseCombination     107   "SLU_93"
   1    1    1.35000000000000E+0
   2    1    1.35000000000000E+0
   3    1    1.50000000000000E+0
   7    1    1.50000000000000E+0
   8    1    1.16000000000000E+0
   11    1    9.00000000000000E-1

LoadCaseCombination     108   "SLU_94"
   1    1    1.35000000000000E+0
   2    1    1.35000000000000E+0
   4    1    1.50000000000000E+0
   7    1    1.50000000000000E+0
   8    1    1.16000000000000E+0
   11    1    9.00000000000000E-1

LoadCaseCombination     109   "SLU_95"
   1    1    1.35000000000000E+0
   2    1    1.35000000000000E+0
   3    1    1.50000000000000E+0
   9    1    1.50000000000000E+0
   8    1    1.16000000000000E+0
   11    1    9.00000000000000E-1

LoadCaseCombination     110   "SLU_96"
   1    1    1.35000000000000E+0
   2    1    1.35000000000000E+0
   4    1    1.50000000000000E+0
   9    1    1.50000000000000E+0
```

```
   8    1    1.16000000000000E+0
   11    1    9.00000000000000E-1

LoadCaseCombination     111   "SLU_97"
   1    1    1.35000000000000E+0
   2    1    1.35000000000000E+0
   3    1    1.50000000000000E+0
   7    1    1.50000000000000E+0
   8    1    1.16000000000000E+0
   12    1    9.00000000000000E-1

LoadCaseCombination     112   "SLU_98"
   1    1    1.35000000000000E+0
   2    1    1.35000000000000E+0
   4    1    1.50000000000000E+0
   7    1    1.50000000000000E+0
   8    1    1.16000000000000E+0
   12    1    9.00000000000000E-1

LoadCaseCombination     113   "SLU_99"
   1    1    1.35000000000000E+0
   2    1    1.35000000000000E+0
   3    1    1.50000000000000E+0
   9    1    1.50000000000000E+0
   8    1    1.16000000000000E+0
   12    1    9.00000000000000E-1

LoadCaseCombination     114   "SLU_100"
   1    1    1.35000000000000E+0
   2    1    1.35000000000000E+0
   4    1    1.50000000000000E+0
   9    1    1.50000000000000E+0
   8    1    1.16000000000000E+0
   12    1    9.00000000000000E-1

LoadCaseCombination     115   "SLU_101"
   1    1    1.35000000000000E+0
   2    1    1.35000000000000E+0
   3    1    1.50000000000000E+0
   7    1    1.50000000000000E+0
   10    1    1.16000000000000E+0
   11    1    9.00000000000000E-1

LoadCaseCombination     116   "SLU_102"
   1    1    1.35000000000000E+0
   2    1    1.35000000000000E+0
   4    1    1.50000000000000E+0
   7    1    1.50000000000000E+0
   10    1    1.16000000000000E+0
   11    1    9.00000000000000E-1

LoadCaseCombination     117   "SLU_103"
   1    1    1.35000000000000E+0
   2    1    1.35000000000000E+0
```

```
   3    1    1.50000000000000E+0
   9    1    1.50000000000000E+0
   10    1    1.16000000000000E+0
   11    1    9.00000000000000E-1

LoadCaseCombination     118   "SLU_104"
   1    1    1.35000000000000E+0
   2    1    1.35000000000000E+0
   4    1    1.50000000000000E+0
   9    1    1.50000000000000E+0
   10    1    1.16000000000000E+0
   11    1    9.00000000000000E-1

LoadCaseCombination     119   "SLU_105"
   1    1    1.35000000000000E+0
   2    1    1.35000000000000E+0
   3    1    1.50000000000000E+0
   7    1    1.50000000000000E+0
   10    1    1.16000000000000E+0
   12    1    9.00000000000000E-1

LoadCaseCombination     120   "SLU_106"
   1    1    1.35000000000000E+0
   2    1    1.35000000000000E+0
   4    1    1.50000000000000E+0
   7    1    1.50000000000000E+0
   10    1    1.16000000000000E+0
   12    1    9.00000000000000E-1

LoadCaseCombination     121   "SLU_107"
   1    1    1.35000000000000E+0
   2    1    1.35000000000000E+0
   3    1    1.50000000000000E+0
   9    1    1.50000000000000E+0
   10    1    1.16000000000000E+0
   12    1    9.00000000000000E-1

LoadCaseCombination     122   "SLU_108"
   1    1    1.35000000000000E+0
   2    1    1.35000000000000E+0
   4    1    1.50000000000000E+0
   9    1    1.50000000000000E+0
   10    1    1.16000000000000E+0
   12    1    9.00000000000000E-1

LoadCaseCombination     123   "SLU_109"
   1    1    1.35000000000000E+0
   2    1    1.35000000000000E+0
   3    1    1.50000000000000E+0
   6    1    1.05000000000000E+0
   7    1    1.50000000000000E+0
   8    1    1.16000000000000E+0
   11    1    9.00000000000000E-1
```

```
LoadCaseCombination     124   "SLU_110"
   1    1    1.35000000000000E+0
   2    1    1.35000000000000E+0
   4    1    1.50000000000000E+0
   6    1    1.05000000000000E+0
   7    1    1.50000000000000E+0
   8    1    1.16000000000000E+0
   11    1    9.00000000000000E-1

LoadCaseCombination     125   "SLU_111"
   1    1    1.35000000000000E+0
   2    1    1.35000000000000E+0
   3    1    1.50000000000000E+0
   6    1    1.05000000000000E+0
   9    1    1.50000000000000E+0
   8    1    1.16000000000000E+0
   11    1    9.00000000000000E-1

LoadCaseCombination     126   "SLU_112"
   1    1    1.35000000000000E+0
   2    1    1.35000000000000E+0
   4    1    1.50000000000000E+0
   6    1    1.05000000000000E+0
   9    1    1.50000000000000E+0
   8    1    1.16000000000000E+0
   11    1    9.00000000000000E-1

LoadCaseCombination     127   "SLU_113"
   1    1    1.35000000000000E+0
   2    1    1.35000000000000E+0
   3    1    1.50000000000000E+0
   6    1    1.05000000000000E+0
   7    1    1.50000000000000E+0
   8    1    1.16000000000000E+0
   12    1    9.00000000000000E-1

LoadCaseCombination     128   "SLU_114"
   1    1    1.35000000000000E+0
   2    1    1.35000000000000E+0
   4    1    1.50000000000000E+0
   6    1    1.05000000000000E+0
   7    1    1.50000000000000E+0
   8    1    1.16000000000000E+0
   12    1    9.00000000000000E-1

LoadCaseCombination     129   "SLU_115"
   1    1    1.35000000000000E+0
   2    1    1.35000000000000E+0
   3    1    1.50000000000000E+0
   6    1    1.05000000000000E+0
   9    1    1.50000000000000E+0
   8    1    1.16000000000000E+0
   12    1    9.00000000000000E-1
```

```
LoadCaseCombination     130   "SLU_116"
   1    1    1.35000000000000E+0
   2    1    1.35000000000000E+0
   4    1    1.50000000000000E+0
   6    1    1.05000000000000E+0
   9    1    1.50000000000000E+0
   8    1    1.16000000000000E+0
   12    1    9.00000000000000E-1

LoadCaseCombination     131   "SLU_117"
   1    1    1.35000000000000E+0
   2    1    1.35000000000000E+0
   3    1    1.50000000000000E+0
   6    1    1.05000000000000E+0
   7    1    1.50000000000000E+0
   10    1    1.16000000000000E+0
   11    1    9.00000000000000E-1

LoadCaseCombination     132   "SLU_118"
   1    1    1.35000000000000E+0
   2    1    1.35000000000000E+0
   4    1    1.50000000000000E+0
   6    1    1.05000000000000E+0
   7    1    1.50000000000000E+0
   10    1    1.16000000000000E+0
   11    1    9.00000000000000E-1

LoadCaseCombination     133   "SLU_119"
   1    1    1.35000000000000E+0
   2    1    1.35000000000000E+0
   3    1    1.50000000000000E+0
   6    1    1.05000000000000E+0
   9    1    1.50000000000000E+0
   10    1    1.16000000000000E+0
   11    1    9.00000000000000E-1

LoadCaseCombination     134   "SLU_120"
   1    1    1.35000000000000E+0
   2    1    1.35000000000000E+0
   4    1    1.50000000000000E+0
   6    1    1.05000000000000E+0
   9    1    1.50000000000000E+0
   10    1    1.16000000000000E+0
   11    1    9.00000000000000E-1

LoadCaseCombination     135   "SLU_121"
   1    1    1.35000000000000E+0
   2    1    1.35000000000000E+0
   3    1    1.50000000000000E+0
   6    1    1.05000000000000E+0
   7    1    1.50000000000000E+0
   10    1    1.16000000000000E+0
   12    1    9.00000000000000E-1
```

```
LoadCaseCombination     136   "SLU_122"
   1    1    1.35000000000000E+0
   2    1    1.35000000000000E+0
   4    1    1.50000000000000E+0
   6    1    1.05000000000000E+0
   7    1    1.50000000000000E+0
   10    1    1.16000000000000E+0
   12    1    9.00000000000000E-1

LoadCaseCombination     137   "SLU_123"
   1    1    1.35000000000000E+0
   2    1    1.35000000000000E+0
   3    1    1.50000000000000E+0
   6    1    1.05000000000000E+0
   9    1    1.50000000000000E+0
   10    1    1.16000000000000E+0
   12    1    9.00000000000000E-1

LoadCaseCombination     138   "SLU_124"
   1    1    1.35000000000000E+0
   2    1    1.35000000000000E+0
   4    1    1.50000000000000E+0
   6    1    1.05000000000000E+0
   9    1    1.50000000000000E+0
   10    1    1.16000000000000E+0
   12    1    9.00000000000000E-1

LoadCaseCombination     139   "SLU_125"
   1    1    1.35000000000000E+0
   2    1    1.35000000000000E+0
   3    1    1.50000000000000E+0
   6    1    1.05000000000000E+0
   8    1    1.45000000000000E+0

LoadCaseCombination     140   "SLU_126"
   1    1    1.35000000000000E+0
   2    1    1.35000000000000E+0
   4    1    1.50000000000000E+0
   6    1    1.05000000000000E+0
   8    1    1.45000000000000E+0

LoadCaseCombination     141   "SLU_127"
   1    1    1.35000000000000E+0
   2    1    1.35000000000000E+0
   3    1    1.50000000000000E+0
   6    1    1.05000000000000E+0
   10    1    1.45000000000000E+0

LoadCaseCombination     142   "SLU_128"
   1    1    1.35000000000000E+0
   2    1    1.35000000000000E+0
   4    1    1.50000000000000E+0
   6    1    1.05000000000000E+0
   10    1    1.45000000000000E+0
```

```
LoadCaseCombination     143   "SLU_129"
   1    1    1.35000000000000E+0
   2    1    1.35000000000000E+0
   3    1    1.50000000000000E+0
   7    1    9.00000000000000E-1
   8    1    1.45000000000000E+0

LoadCaseCombination     144   "SLU_130"
   1    1    1.35000000000000E+0
   2    1    1.35000000000000E+0
   4    1    1.50000000000000E+0
   7    1    9.00000000000000E-1
   8    1    1.45000000000000E+0

LoadCaseCombination     145   "SLU_131"
   1    1    1.35000000000000E+0
   2    1    1.35000000000000E+0
   3    1    1.50000000000000E+0
   9    1    9.00000000000000E-1
   8    1    1.45000000000000E+0

LoadCaseCombination     146   "SLU_132"
   1    1    1.35000000000000E+0
   2    1    1.35000000000000E+0
   4    1    1.50000000000000E+0
   9    1    9.00000000000000E-1
   8    1    1.45000000000000E+0

LoadCaseCombination     147   "SLU_133"
   1    1    1.35000000000000E+0
   2    1    1.35000000000000E+0
   3    1    1.50000000000000E+0
   7    1    9.00000000000000E-1
   10    1    1.45000000000000E+0

LoadCaseCombination     148   "SLU_134"
   1    1    1.35000000000000E+0
   2    1    1.35000000000000E+0
   4    1    1.50000000000000E+0
   7    1    9.00000000000000E-1
   10    1    1.45000000000000E+0

LoadCaseCombination     149   "SLU_135"
   1    1    1.35000000000000E+0
   2    1    1.35000000000000E+0
   3    1    1.50000000000000E+0
   9    1    9.00000000000000E-1
   10    1    1.45000000000000E+0

LoadCaseCombination     150   "SLU_136"
   1    1    1.35000000000000E+0
   2    1    1.35000000000000E+0
   4    1    1.50000000000000E+0
```

```
   9    1    9.00000000000000E-1
   10    1    1.45000000000000E+0

LoadCaseCombination     151   "SLU_137"
   1    1    1.35000000000000E+0
   2    1    1.35000000000000E+0
   3    1    1.50000000000000E+0
   8    1    1.45000000000000E+0
   11    1    9.00000000000000E-1

LoadCaseCombination     152   "SLU_138"
   1    1    1.35000000000000E+0
   2    1    1.35000000000000E+0
   4    1    1.50000000000000E+0
   8    1    1.45000000000000E+0
   11    1    9.00000000000000E-1

LoadCaseCombination     153   "SLU_139"
   1    1    1.35000000000000E+0
   2    1    1.35000000000000E+0
   3    1    1.50000000000000E+0
   8    1    1.45000000000000E+0
   11    1    9.00000000000000E-1

LoadCaseCombination     154   "SLU_140"
   1    1    1.35000000000000E+0
   2    1    1.35000000000000E+0
   4    1    1.50000000000000E+0
   8    1    1.45000000000000E+0
   11    1    9.00000000000000E-1

LoadCaseCombination     155   "SLU_141"
   1    1    1.35000000000000E+0
   2    1    1.35000000000000E+0
   3    1    1.50000000000000E+0
   10    1    1.45000000000000E+0
   12    1    9.00000000000000E-1

LoadCaseCombination     156   "SLU_142"
   1    1    1.35000000000000E+0
   2    1    1.35000000000000E+0
   4    1    1.50000000000000E+0
   10    1    1.45000000000000E+0
   12    1    9.00000000000000E-1

LoadCaseCombination     157   "SLU_143"
   1    1    1.35000000000000E+0
   2    1    1.35000000000000E+0
   3    1    1.50000000000000E+0
   10    1    1.45000000000000E+0
   12    1    9.00000000000000E-1

LoadCaseCombination     158   "SLU_144"
   1    1    1.35000000000000E+0
```

```
   2    1    1.35000000000000E+0
   4    1    1.50000000000000E+0
   10    1    1.45000000000000E+0
   12    1    9.00000000000000E-1

LoadCaseCombination     159   "SLU_145"
   1    1    1.35000000000000E+0
   2    1    1.35000000000000E+0
   3    1    1.50000000000000E+0
   6    1    1.05000000000000E+0
   7    1    9.00000000000000E-1
   8    1    1.45000000000000E+0

LoadCaseCombination     160   "SLU_146"
   1    1    1.35000000000000E+0
   2    1    1.35000000000000E+0
   4    1    1.50000000000000E+0
   6    1    1.05000000000000E+0
   7    1    9.00000000000000E-1
   8    1    1.45000000000000E+0

LoadCaseCombination     161   "SLU_147"
   1    1    1.35000000000000E+0
   2    1    1.35000000000000E+0
   3    1    1.50000000000000E+0
   6    1    1.05000000000000E+0
   9    1    9.00000000000000E-1
   8    1    1.45000000000000E+0

LoadCaseCombination     162   "SLU_148"
   1    1    1.35000000000000E+0
   2    1    1.35000000000000E+0
   4    1    1.50000000000000E+0
   6    1    1.05000000000000E+0
   9    1    9.00000000000000E-1
   8    1    1.45000000000000E+0

LoadCaseCombination     163   "SLU_149"
   1    1    1.35000000000000E+0
   2    1    1.35000000000000E+0
   3    1    1.50000000000000E+0
   6    1    1.05000000000000E+0
   7    1    9.00000000000000E-1
   10    1    1.45000000000000E+0

LoadCaseCombination     164   "SLU_150"
   1    1    1.35000000000000E+0
   2    1    1.35000000000000E+0
   4    1    1.50000000000000E+0
   6    1    1.05000000000000E+0
   7    1    9.00000000000000E-1
   10    1    1.45000000000000E+0

LoadCaseCombination     165   "SLU_151"
```

```
   1    1    1.35000000000000E+0
   2    1    1.35000000000000E+0
   3    1    1.50000000000000E+0
   6    1    1.05000000000000E+0
   9    1    9.00000000000000E-1
   10    1    1.45000000000000E+0

LoadCaseCombination     166   "SLU_152"
   1    1    1.35000000000000E+0
   2    1    1.35000000000000E+0
   4    1    1.50000000000000E+0
   6    1    1.05000000000000E+0
   9    1    9.00000000000000E-1
   10    1    1.45000000000000E+0

LoadCaseCombination     167   "SLU_153"
   1    1    1.35000000000000E+0
   2    1    1.35000000000000E+0
   3    1    1.50000000000000E+0
   6    1    1.05000000000000E+0
   8    1    1.45000000000000E+0
   11    1    9.00000000000000E-1

LoadCaseCombination     168   "SLU_154"
   1    1    1.35000000000000E+0
   2    1    1.35000000000000E+0
   4    1    1.50000000000000E+0
   6    1    1.05000000000000E+0
   8    1    1.45000000000000E+0
   11    1    9.00000000000000E-1

LoadCaseCombination     169   "SLU_155"
   1    1    1.35000000000000E+0
   2    1    1.35000000000000E+0
   3    1    1.50000000000000E+0
   6    1    1.05000000000000E+0
   8    1    1.45000000000000E+0
   11    1    9.00000000000000E-1

LoadCaseCombination     170   "SLU_156"
   1    1    1.35000000000000E+0
   2    1    1.35000000000000E+0
   4    1    1.50000000000000E+0
   6    1    1.05000000000000E+0
   8    1    1.45000000000000E+0
   11    1    9.00000000000000E-1

LoadCaseCombination     171   "SLU_157"
   1    1    1.35000000000000E+0
   2    1    1.35000000000000E+0
   3    1    1.50000000000000E+0
   6    1    1.05000000000000E+0
   10    1    1.45000000000000E+0
   12    1    9.00000000000000E-1
```

```
LoadCaseCombination     172   "SLU_158"
   1    1    1.35000000000000E+0
   2    1    1.35000000000000E+0
   4    1    1.50000000000000E+0
   6    1    1.05000000000000E+0
   10    1    1.45000000000000E+0
   12    1    9.00000000000000E-1

LoadCaseCombination     173   "SLU_159"
   1    1    1.35000000000000E+0
   2    1    1.35000000000000E+0
   3    1    1.50000000000000E+0
   6    1    1.05000000000000E+0
   10    1    1.45000000000000E+0
   12    1    9.00000000000000E-1

LoadCaseCombination     174   "SLU_160"
   1    1    1.35000000000000E+0
   2    1    1.35000000000000E+0
   4    1    1.50000000000000E+0
   6    1    1.05000000000000E+0
   10    1    1.45000000000000E+0
   12    1    9.00000000000000E-1

LoadCaseCombination     175   "SLU_161"
   1    1    1.35000000000000E+0
   2    1    1.35000000000000E+0
   3    1    1.50000000000000E+0
   7    1    9.00000000000000E-1
   8    1    1.45000000000000E+0
   11    1    9.00000000000000E-1

LoadCaseCombination     176   "SLU_162"
   1    1    1.35000000000000E+0
   2    1    1.35000000000000E+0
   4    1    1.50000000000000E+0
   7    1    9.00000000000000E-1
   8    1    1.45000000000000E+0
   11    1    9.00000000000000E-1

LoadCaseCombination     177   "SLU_163"
   1    1    1.35000000000000E+0
   2    1    1.35000000000000E+0
   3    1    1.50000000000000E+0
   9    1    9.00000000000000E-1
   8    1    1.45000000000000E+0
   11    1    9.00000000000000E-1

LoadCaseCombination     178   "SLU_164"
   1    1    1.35000000000000E+0
   2    1    1.35000000000000E+0
   4    1    1.50000000000000E+0
   9    1    9.00000000000000E-1
```

```
   8    1    1.45000000000000E+0
   11    1    9.00000000000000E-1

LoadCaseCombination     179   "SLU_165"
   1    1    1.35000000000000E+0
   2    1    1.35000000000000E+0
   3    1    1.50000000000000E+0
   7    1    9.00000000000000E-1
   8    1    1.45000000000000E+0
   12    1    9.00000000000000E-1

LoadCaseCombination     180   "SLU_166"
   1    1    1.35000000000000E+0
   2    1    1.35000000000000E+0
   4    1    1.50000000000000E+0
   7    1    9.00000000000000E-1
   8    1    1.45000000000000E+0
   12    1    9.00000000000000E-1

LoadCaseCombination     181   "SLU_167"
   1    1    1.35000000000000E+0
   2    1    1.35000000000000E+0
   3    1    1.50000000000000E+0
   9    1    9.00000000000000E-1
   8    1    1.45000000000000E+0
   12    1    9.00000000000000E-1

LoadCaseCombination     182   "SLU_168"
   1    1    1.35000000000000E+0
   2    1    1.35000000000000E+0
   4    1    1.50000000000000E+0
   9    1    9.00000000000000E-1
   8    1    1.45000000000000E+0
   12    1    9.00000000000000E-1

LoadCaseCombination     183   "SLU_169"
   1    1    1.35000000000000E+0
   2    1    1.35000000000000E+0
   3    1    1.50000000000000E+0
   7    1    9.00000000000000E-1
   10    1    1.45000000000000E+0
   11    1    9.00000000000000E-1

LoadCaseCombination     184   "SLU_170"
   1    1    1.35000000000000E+0
   2    1    1.35000000000000E+0
   4    1    1.50000000000000E+0
   7    1    9.00000000000000E-1
   10    1    1.45000000000000E+0
   11    1    9.00000000000000E-1

LoadCaseCombination     185   "SLU_171"
   1    1    1.35000000000000E+0
   2    1    1.35000000000000E+0
```

```
   3    1    1.50000000000000E+0
   9    1    9.00000000000000E-1
   10    1    1.45000000000000E+0
   11    1    9.00000000000000E-1

LoadCaseCombination     186   "SLU_172"
   1    1    1.35000000000000E+0
   2    1    1.35000000000000E+0
   4    1    1.50000000000000E+0
   9    1    9.00000000000000E-1
   10    1    1.45000000000000E+0
   11    1    9.00000000000000E-1

LoadCaseCombination     187   "SLU_173"
   1    1    1.35000000000000E+0
   2    1    1.35000000000000E+0
   3    1    1.50000000000000E+0
   7    1    9.00000000000000E-1
   10    1    1.45000000000000E+0
   12    1    9.00000000000000E-1

LoadCaseCombination     188   "SLU_174"
   1    1    1.35000000000000E+0
   2    1    1.35000000000000E+0
   4    1    1.50000000000000E+0
   7    1    9.00000000000000E-1
   10    1    1.45000000000000E+0
   12    1    9.00000000000000E-1

LoadCaseCombination     189   "SLU_175"
   1    1    1.35000000000000E+0
   2    1    1.35000000000000E+0
   3    1    1.50000000000000E+0
   9    1    9.00000000000000E-1
   10    1    1.45000000000000E+0
   12    1    9.00000000000000E-1

LoadCaseCombination     190   "SLU_176"
   1    1    1.35000000000000E+0
   2    1    1.35000000000000E+0
   4    1    1.50000000000000E+0
   9    1    9.00000000000000E-1
   10    1    1.45000000000000E+0
   12    1    9.00000000000000E-1

LoadCaseCombination     191   "SLU_177"
   1    1    1.35000000000000E+0
   2    1    1.35000000000000E+0
   3    1    1.50000000000000E+0
   6    1    1.05000000000000E+0
   7    1    9.00000000000000E-1
   8    1    1.45000000000000E+0
   11    1    9.00000000000000E-1
```

```
LoadCaseCombination     192   "SLU_178"
   1    1    1.35000000000000E+0
   2    1    1.35000000000000E+0
   4    1    1.50000000000000E+0
   6    1    1.05000000000000E+0
   7    1    9.00000000000000E-1
   8    1    1.45000000000000E+0
   11    1    9.00000000000000E-1

LoadCaseCombination     193   "SLU_179"
   1    1    1.35000000000000E+0
   2    1    1.35000000000000E+0
   3    1    1.50000000000000E+0
   6    1    1.05000000000000E+0
   9    1    9.00000000000000E-1
   8    1    1.45000000000000E+0
   11    1    9.00000000000000E-1

LoadCaseCombination     194   "SLU_180"
   1    1    1.35000000000000E+0
   2    1    1.35000000000000E+0
   4    1    1.50000000000000E+0
   6    1    1.05000000000000E+0
   9    1    9.00000000000000E-1
   8    1    1.45000000000000E+0
   11    1    9.00000000000000E-1

LoadCaseCombination     195   "SLU_181"
   1    1    1.35000000000000E+0
   2    1    1.35000000000000E+0
   3    1    1.50000000000000E+0
   6    1    1.05000000000000E+0
   7    1    9.00000000000000E-1
   8    1    1.45000000000000E+0
   12    1    9.00000000000000E-1

LoadCaseCombination     196   "SLU_182"
   1    1    1.35000000000000E+0
   2    1    1.35000000000000E+0
   4    1    1.50000000000000E+0
   6    1    1.05000000000000E+0
   7    1    9.00000000000000E-1
   8    1    1.45000000000000E+0
   12    1    9.00000000000000E-1

LoadCaseCombination     197   "SLU_183"
   1    1    1.35000000000000E+0
   2    1    1.35000000000000E+0
   3    1    1.50000000000000E+0
   6    1    1.05000000000000E+0
   9    1    9.00000000000000E-1
   8    1    1.45000000000000E+0
   12    1    9.00000000000000E-1
```

```
LoadCaseCombination     198   "SLU_184"
   1    1    1.35000000000000E+0
   2    1    1.35000000000000E+0
   4    1    1.50000000000000E+0
   6    1    1.05000000000000E+0
   9    1    9.00000000000000E-1
   8    1    1.45000000000000E+0
   12    1    9.00000000000000E-1

LoadCaseCombination     199   "SLU_185"
   1    1    1.35000000000000E+0
   2    1    1.35000000000000E+0
   3    1    1.50000000000000E+0
   6    1    1.05000000000000E+0
   7    1    9.00000000000000E-1
   10    1    1.45000000000000E+0
   11    1    9.00000000000000E-1

LoadCaseCombination     200   "SLU_186"
   1    1    1.35000000000000E+0
   2    1    1.35000000000000E+0
   4    1    1.50000000000000E+0
   6    1    1.05000000000000E+0
   7    1    9.00000000000000E-1
   10    1    1.45000000000000E+0
   11    1    9.00000000000000E-1

LoadCaseCombination     201   "SLU_187"
   1    1    1.35000000000000E+0
   2    1    1.35000000000000E+0
   3    1    1.50000000000000E+0
   6    1    1.05000000000000E+0
   9    1    9.00000000000000E-1
   10    1    1.45000000000000E+0
   11    1    9.00000000000000E-1

LoadCaseCombination     202   "SLU_188"
   1    1    1.35000000000000E+0
   2    1    1.35000000000000E+0
   4    1    1.50000000000000E+0
   6    1    1.05000000000000E+0
   9    1    9.00000000000000E-1
   10    1    1.45000000000000E+0
   11    1    9.00000000000000E-1

LoadCaseCombination     203   "SLU_189"
   1    1    1.35000000000000E+0
   2    1    1.35000000000000E+0
   3    1    1.50000000000000E+0
   6    1    1.05000000000000E+0
   7    1    9.00000000000000E-1
   10    1    1.45000000000000E+0
   12    1    9.00000000000000E-1
```

```
LoadCaseCombination     204   "SLU_190"
   1    1    1.35000000000000E+0
   2    1    1.35000000000000E+0
   4    1    1.50000000000000E+0
   6    1    1.05000000000000E+0
   7    1    9.00000000000000E-1
   10    1    1.45000000000000E+0
   12    1    9.00000000000000E-1

LoadCaseCombination     205   "SLU_191"
   1    1    1.35000000000000E+0
   2    1    1.35000000000000E+0
   3    1    1.50000000000000E+0
   6    1    1.05000000000000E+0
   9    1    9.00000000000000E-1
   10    1    1.45000000000000E+0
   12    1    9.00000000000000E-1

LoadCaseCombination     206   "SLU_192"
   1    1    1.35000000000000E+0
   2    1    1.35000000000000E+0
   4    1    1.50000000000000E+0
   6    1    1.05000000000000E+0
   9    1    9.00000000000000E-1
   10    1    1.45000000000000E+0
   12    1    9.00000000000000E-1

LoadCaseCombination     207   "SLU_193"
   1    1    1.35000000000000E+0
   2    1    1.35000000000000E+0
   3    1    1.50000000000000E+0
   6    1    1.05000000000000E+0
   11    1    1.50000000000000E+0

LoadCaseCombination     208   "SLU_194"
   1    1    1.35000000000000E+0
   2    1    1.35000000000000E+0
   4    1    1.50000000000000E+0
   6    1    1.05000000000000E+0
   11    1    1.50000000000000E+0

LoadCaseCombination     209   "SLU_195"
   1    1    1.35000000000000E+0
   2    1    1.35000000000000E+0
   3    1    1.50000000000000E+0
   6    1    1.05000000000000E+0
   12    1    1.50000000000000E+0

LoadCaseCombination     210   "SLU_196"
   1    1    1.35000000000000E+0
   2    1    1.35000000000000E+0
   4    1    1.50000000000000E+0
   6    1    1.05000000000000E+0
   12    1    1.50000000000000E+0
```

```
LoadCaseCombination     211   "SLU_197"
   1    1    1.35000000000000E+0
   2    1    1.35000000000000E+0
   3    1    1.50000000000000E+0
   7    1    9.00000000000000E-1
   11    1    1.50000000000000E+0

LoadCaseCombination     212   "SLU_198"
   1    1    1.35000000000000E+0
   2    1    1.35000000000000E+0
   4    1    1.50000000000000E+0
   7    1    9.00000000000000E-1
   11    1    1.50000000000000E+0

LoadCaseCombination     213   "SLU_199"
   1    1    1.35000000000000E+0
   2    1    1.35000000000000E+0
   3    1    1.50000000000000E+0
   9    1    9.00000000000000E-1
   11    1    1.50000000000000E+0

LoadCaseCombination     214   "SLU_200"
   1    1    1.35000000000000E+0
   2    1    1.35000000000000E+0
   4    1    1.50000000000000E+0
   9    1    9.00000000000000E-1
   11    1    1.50000000000000E+0

LoadCaseCombination     215   "SLU_201"
   1    1    1.35000000000000E+0
   2    1    1.35000000000000E+0
   3    1    1.50000000000000E+0
   7    1    9.00000000000000E-1
   12    1    1.50000000000000E+0

LoadCaseCombination     216   "SLU_202"
   1    1    1.35000000000000E+0
   2    1    1.35000000000000E+0
   4    1    1.50000000000000E+0
   7    1    9.00000000000000E-1
   12    1    1.50000000000000E+0

LoadCaseCombination     217   "SLU_203"
   1    1    1.35000000000000E+0
   2    1    1.35000000000000E+0
   3    1    1.50000000000000E+0
   9    1    9.00000000000000E-1
   12    1    1.50000000000000E+0

LoadCaseCombination     218   "SLU_204"
   1    1    1.35000000000000E+0
   2    1    1.35000000000000E+0
   4    1    1.50000000000000E+0
```

```
   9    1    9.00000000000000E-1
   12    1    1.50000000000000E+0

LoadCaseCombination     219   "SLU_205"
   1    1    1.35000000000000E+0
   2    1    1.35000000000000E+0
   3    1    1.50000000000000E+0
   8    1    1.16000000000000E+0
   11    1    1.50000000000000E+0

LoadCaseCombination     220   "SLU_206"
   1    1    1.35000000000000E+0
   2    1    1.35000000000000E+0
   4    1    1.50000000000000E+0
   8    1    1.16000000000000E+0
   11    1    1.50000000000000E+0

LoadCaseCombination     221   "SLU_207"
   1    1    1.35000000000000E+0
   2    1    1.35000000000000E+0
   3    1    1.50000000000000E+0
   8    1    1.16000000000000E+0
   11    1    1.50000000000000E+0

LoadCaseCombination     222   "SLU_208"
   1    1    1.35000000000000E+0
   2    1    1.35000000000000E+0
   4    1    1.50000000000000E+0
   8    1    1.16000000000000E+0
   11    1    1.50000000000000E+0

LoadCaseCombination     223   "SLU_209"
   1    1    1.35000000000000E+0
   2    1    1.35000000000000E+0
   3    1    1.50000000000000E+0
   10    1    1.16000000000000E+0
   12    1    1.50000000000000E+0

LoadCaseCombination     224   "SLU_210"
   1    1    1.35000000000000E+0
   2    1    1.35000000000000E+0
   4    1    1.50000000000000E+0
   10    1    1.16000000000000E+0
   12    1    1.50000000000000E+0

LoadCaseCombination     225   "SLU_211"
   1    1    1.35000000000000E+0
   2    1    1.35000000000000E+0
   3    1    1.50000000000000E+0
   10    1    1.16000000000000E+0
   12    1    1.50000000000000E+0

LoadCaseCombination     226   "SLU_212"
   1    1    1.35000000000000E+0
```

```
   2    1    1.35000000000000E+0
   4    1    1.50000000000000E+0
   10    1    1.16000000000000E+0
   12    1    1.50000000000000E+0

LoadCaseCombination     227   "SLU_213"
   1    1    1.35000000000000E+0
   2    1    1.35000000000000E+0
   3    1    1.50000000000000E+0
   6    1    1.05000000000000E+0
   7    1    9.00000000000000E-1
   11    1    1.50000000000000E+0

LoadCaseCombination     228   "SLU_214"
   1    1    1.35000000000000E+0
   2    1    1.35000000000000E+0
   4    1    1.50000000000000E+0
   6    1    1.05000000000000E+0
   7    1    9.00000000000000E-1
   11    1    1.50000000000000E+0

LoadCaseCombination     229   "SLU_215"
   1    1    1.35000000000000E+0
   2    1    1.35000000000000E+0
   3    1    1.50000000000000E+0
   6    1    1.05000000000000E+0
   9    1    9.00000000000000E-1
   11    1    1.50000000000000E+0

LoadCaseCombination     230   "SLU_216"
   1    1    1.35000000000000E+0
   2    1    1.35000000000000E+0
   4    1    1.50000000000000E+0
   6    1    1.05000000000000E+0
   9    1    9.00000000000000E-1
   11    1    1.50000000000000E+0

LoadCaseCombination     231   "SLU_217"
   1    1    1.35000000000000E+0
   2    1    1.35000000000000E+0
   3    1    1.50000000000000E+0
   6    1    1.05000000000000E+0
   7    1    9.00000000000000E-1
   12    1    1.50000000000000E+0

LoadCaseCombination     232   "SLU_218"
   1    1    1.35000000000000E+0
   2    1    1.35000000000000E+0
   4    1    1.50000000000000E+0
   6    1    1.05000000000000E+0
   7    1    9.00000000000000E-1
   12    1    1.50000000000000E+0

LoadCaseCombination     233   "SLU_219"
```

```
   1    1    1.35000000000000E+0
   2    1    1.35000000000000E+0
   3    1    1.50000000000000E+0
   6    1    1.05000000000000E+0
   9    1    9.00000000000000E-1
   12    1    1.50000000000000E+0

LoadCaseCombination     234   "SLU_220"
   1    1    1.35000000000000E+0
   2    1    1.35000000000000E+0
   4    1    1.50000000000000E+0
   6    1    1.05000000000000E+0
   9    1    9.00000000000000E-1
   12    1    1.50000000000000E+0

LoadCaseCombination     235   "SLU_221"
   1    1    1.35000000000000E+0
   2    1    1.35000000000000E+0
   3    1    1.50000000000000E+0
   6    1    1.05000000000000E+0
   8    1    1.16000000000000E+0
   11    1    1.50000000000000E+0

LoadCaseCombination     236   "SLU_222"
   1    1    1.35000000000000E+0
   2    1    1.35000000000000E+0
   4    1    1.50000000000000E+0
   6    1    1.05000000000000E+0
   8    1    1.16000000000000E+0
   11    1    1.50000000000000E+0

LoadCaseCombination     237   "SLU_223"
   1    1    1.35000000000000E+0
   2    1    1.35000000000000E+0
   3    1    1.50000000000000E+0
   6    1    1.05000000000000E+0
   8    1    1.16000000000000E+0
   11    1    1.50000000000000E+0

LoadCaseCombination     238   "SLU_224"
   1    1    1.35000000000000E+0
   2    1    1.35000000000000E+0
   4    1    1.50000000000000E+0
   6    1    1.05000000000000E+0
   8    1    1.16000000000000E+0
   11    1    1.50000000000000E+0

LoadCaseCombination     239   "SLU_225"
   1    1    1.35000000000000E+0
   2    1    1.35000000000000E+0
   3    1    1.50000000000000E+0
   6    1    1.05000000000000E+0
   10    1    1.16000000000000E+0
   12    1    1.50000000000000E+0
```

```
LoadCaseCombination     240   "SLU_226"
   1    1    1.35000000000000E+0
   2    1    1.35000000000000E+0
   4    1    1.50000000000000E+0
   6    1    1.05000000000000E+0
   10    1    1.16000000000000E+0
   12    1    1.50000000000000E+0

LoadCaseCombination     241   "SLU_227"
   1    1    1.35000000000000E+0
   2    1    1.35000000000000E+0
   3    1    1.50000000000000E+0
   6    1    1.05000000000000E+0
   10    1    1.16000000000000E+0
   12    1    1.50000000000000E+0

LoadCaseCombination     242   "SLU_228"
   1    1    1.35000000000000E+0
   2    1    1.35000000000000E+0
   4    1    1.50000000000000E+0
   6    1    1.05000000000000E+0
   10    1    1.16000000000000E+0
   12    1    1.50000000000000E+0

LoadCaseCombination     243   "SLU_229"
   1    1    1.35000000000000E+0
   2    1    1.35000000000000E+0
   3    1    1.50000000000000E+0
   7    1    9.00000000000000E-1
   8    1    1.16000000000000E+0
   11    1    1.50000000000000E+0

LoadCaseCombination     244   "SLU_230"
   1    1    1.35000000000000E+0
   2    1    1.35000000000000E+0
   4    1    1.50000000000000E+0
   7    1    9.00000000000000E-1
   8    1    1.16000000000000E+0
   11    1    1.50000000000000E+0

LoadCaseCombination     245   "SLU_231"
   1    1    1.35000000000000E+0
   2    1    1.35000000000000E+0
   3    1    1.50000000000000E+0
   9    1    9.00000000000000E-1
   8    1    1.16000000000000E+0
   11    1    1.50000000000000E+0

LoadCaseCombination     246   "SLU_232"
   1    1    1.35000000000000E+0
   2    1    1.35000000000000E+0
   4    1    1.50000000000000E+0
   9    1    9.00000000000000E-1
```

```
   8    1    1.16000000000000E+0
   11    1    1.50000000000000E+0

LoadCaseCombination     247   "SLU_233"
   1    1    1.35000000000000E+0
   2    1    1.35000000000000E+0
   3    1    1.50000000000000E+0
   7    1    9.00000000000000E-1
   8    1    1.16000000000000E+0
   12    1    1.50000000000000E+0

LoadCaseCombination     248   "SLU_234"
   1    1    1.35000000000000E+0
   2    1    1.35000000000000E+0
   4    1    1.50000000000000E+0
   7    1    9.00000000000000E-1
   8    1    1.16000000000000E+0
   12    1    1.50000000000000E+0

LoadCaseCombination     249   "SLU_235"
   1    1    1.35000000000000E+0
   2    1    1.35000000000000E+0
   3    1    1.50000000000000E+0
   9    1    9.00000000000000E-1
   8    1    1.16000000000000E+0
   12    1    1.50000000000000E+0

LoadCaseCombination     250   "SLU_236"
   1    1    1.35000000000000E+0
   2    1    1.35000000000000E+0
   4    1    1.50000000000000E+0
   9    1    9.00000000000000E-1
   8    1    1.16000000000000E+0
   12    1    1.50000000000000E+0

LoadCaseCombination     251   "SLU_237"
   1    1    1.35000000000000E+0
   2    1    1.35000000000000E+0
   3    1    1.50000000000000E+0
   7    1    9.00000000000000E-1
   10    1    1.16000000000000E+0
   11    1    1.50000000000000E+0

LoadCaseCombination     252   "SLU_238"
   1    1    1.35000000000000E+0
   2    1    1.35000000000000E+0
   4    1    1.50000000000000E+0
   7    1    9.00000000000000E-1
   10    1    1.16000000000000E+0
   11    1    1.50000000000000E+0

LoadCaseCombination     253   "SLU_239"
   1    1    1.35000000000000E+0
   2    1    1.35000000000000E+0
```

```
   3    1    1.50000000000000E+0
   9    1    9.00000000000000E-1
   10    1    1.16000000000000E+0
   11    1    1.50000000000000E+0

LoadCaseCombination     254   "SLU_240"
   1    1    1.35000000000000E+0
   2    1    1.35000000000000E+0
   4    1    1.50000000000000E+0
   9    1    9.00000000000000E-1
   10    1    1.16000000000000E+0
   11    1    1.50000000000000E+0

LoadCaseCombination     255   "SLU_241"
   1    1    1.35000000000000E+0
   2    1    1.35000000000000E+0
   3    1    1.50000000000000E+0
   7    1    9.00000000000000E-1
   10    1    1.16000000000000E+0
   12    1    1.50000000000000E+0

LoadCaseCombination     256   "SLU_242"
   1    1    1.35000000000000E+0
   2    1    1.35000000000000E+0
   4    1    1.50000000000000E+0
   7    1    9.00000000000000E-1
   10    1    1.16000000000000E+0
   12    1    1.50000000000000E+0

LoadCaseCombination     257   "SLU_243"
   1    1    1.35000000000000E+0
   2    1    1.35000000000000E+0
   3    1    1.50000000000000E+0
   9    1    9.00000000000000E-1
   10    1    1.16000000000000E+0
   12    1    1.50000000000000E+0

LoadCaseCombination     258   "SLU_244"
   1    1    1.35000000000000E+0
   2    1    1.35000000000000E+0
   4    1    1.50000000000000E+0
   9    1    9.00000000000000E-1
   10    1    1.16000000000000E+0
   12    1    1.50000000000000E+0

LoadCaseCombination     259   "SLU_245"
   1    1    1.35000000000000E+0
   2    1    1.35000000000000E+0
   3    1    1.50000000000000E+0
   6    1    1.05000000000000E+0
   7    1    9.00000000000000E-1
   8    1    1.16000000000000E+0
   11    1    1.50000000000000E+0
```

```
LoadCaseCombination     260   "SLU_246"
   1    1    1.35000000000000E+0
   2    1    1.35000000000000E+0
   4    1    1.50000000000000E+0
   6    1    1.05000000000000E+0
   7    1    9.00000000000000E-1
   8    1    1.16000000000000E+0
   11    1    1.50000000000000E+0

LoadCaseCombination     261   "SLU_247"
   1    1    1.35000000000000E+0
   2    1    1.35000000000000E+0
   3    1    1.50000000000000E+0
   6    1    1.05000000000000E+0
   9    1    9.00000000000000E-1
   8    1    1.16000000000000E+0
   11    1    1.50000000000000E+0

LoadCaseCombination     262   "SLU_248"
   1    1    1.35000000000000E+0
   2    1    1.35000000000000E+0
   4    1    1.50000000000000E+0
   6    1    1.05000000000000E+0
   9    1    9.00000000000000E-1
   8    1    1.16000000000000E+0
   11    1    1.50000000000000E+0

LoadCaseCombination     263   "SLU_249"
   1    1    1.35000000000000E+0
   2    1    1.35000000000000E+0
   3    1    1.50000000000000E+0
   6    1    1.05000000000000E+0
   7    1    9.00000000000000E-1
   8    1    1.16000000000000E+0
   12    1    1.50000000000000E+0

LoadCaseCombination     264   "SLU_250"
   1    1    1.35000000000000E+0
   2    1    1.35000000000000E+0
   4    1    1.50000000000000E+0
   6    1    1.05000000000000E+0
   7    1    9.00000000000000E-1
   8    1    1.16000000000000E+0
   12    1    1.50000000000000E+0

LoadCaseCombination     265   "SLU_251"
   1    1    1.35000000000000E+0
   2    1    1.35000000000000E+0
   3    1    1.50000000000000E+0
   6    1    1.05000000000000E+0
   9    1    9.00000000000000E-1
   8    1    1.16000000000000E+0
   12    1    1.50000000000000E+0
```

```
LoadCaseCombination     266   "SLU_252"
   1    1    1.35000000000000E+0
   2    1    1.35000000000000E+0
   4    1    1.50000000000000E+0
   6    1    1.05000000000000E+0
   9    1    9.00000000000000E-1
   8    1    1.16000000000000E+0
   12    1    1.50000000000000E+0

LoadCaseCombination     267   "SLU_253"
   1    1    1.35000000000000E+0
   2    1    1.35000000000000E+0
   3    1    1.50000000000000E+0
   6    1    1.05000000000000E+0
   7    1    9.00000000000000E-1
   10    1    1.16000000000000E+0
   11    1    1.50000000000000E+0

LoadCaseCombination     268   "SLU_254"
   1    1    1.35000000000000E+0
   2    1    1.35000000000000E+0
   4    1    1.50000000000000E+0
   6    1    1.05000000000000E+0
   7    1    9.00000000000000E-1
   10    1    1.16000000000000E+0
   11    1    1.50000000000000E+0

LoadCaseCombination     269   "SLU_255"
   1    1    1.35000000000000E+0
   2    1    1.35000000000000E+0
   3    1    1.50000000000000E+0
   6    1    1.05000000000000E+0
   9    1    9.00000000000000E-1
   10    1    1.16000000000000E+0
   11    1    1.50000000000000E+0

LoadCaseCombination     270   "SLU_256"
   1    1    1.35000000000000E+0
   2    1    1.35000000000000E+0
   4    1    1.50000000000000E+0
   6    1    1.05000000000000E+0
   9    1    9.00000000000000E-1
   10    1    1.16000000000000E+0
   11    1    1.50000000000000E+0

LoadCaseCombination     271   "SLU_257"
   1    1    1.35000000000000E+0
   2    1    1.35000000000000E+0
   3    1    1.50000000000000E+0
   6    1    1.05000000000000E+0
   7    1    9.00000000000000E-1
   10    1    1.16000000000000E+0
   12    1    1.50000000000000E+0
```

```
LoadCaseCombination     272   "SLU_258"
   1    1    1.35000000000000E+0
   2    1    1.35000000000000E+0
   4    1    1.50000000000000E+0
   6    1    1.05000000000000E+0
   7    1    9.00000000000000E-1
   10    1    1.16000000000000E+0
   12    1    1.50000000000000E+0

LoadCaseCombination     273   "SLU_259"
   1    1    1.35000000000000E+0
   2    1    1.35000000000000E+0
   3    1    1.50000000000000E+0
   6    1    1.05000000000000E+0
   9    1    9.00000000000000E-1
   10    1    1.16000000000000E+0
   12    1    1.50000000000000E+0

LoadCaseCombination     274   "SLU_260"
   1    1    1.35000000000000E+0
   2    1    1.35000000000000E+0
   4    1    1.50000000000000E+0
   6    1    1.05000000000000E+0
   9    1    9.00000000000000E-1
   10    1    1.16000000000000E+0
   12    1    1.50000000000000E+0

LoadCaseCombination     275   "SLE_000"
   1    1    1.00000000000000E+0
   2    1    1.00000000000000E+0
   3    1    1.00000000000000E+0

LoadCaseCombination     276   "SLE_001"
   1    1    1.00000000000000E+0
   2    1    1.00000000000000E+0
   4    1    1.00000000000000E+0

LoadCaseCombination     277   "SLE_01"
   1    1    1.00000000000000E+0
   2    1    1.00000000000000E+0
   3    1    1.00000000000000E+0
   5    1    1.00000000000000E+0

LoadCaseCombination     278   "SLE_02"
   1    1    1.00000000000000E+0
   2    1    1.00000000000000E+0
   4    1    1.00000000000000E+0
   5    1    1.00000000000000E+0

LoadCaseCombination     279   "SLE_03"
   1    1    1.00000000000000E+0
   2    1    1.00000000000000E+0
   3    1    1.00000000000000E+0
   6    1    1.00000000000000E+0
```

```
LoadCaseCombination     280   "SLE_04"
   1    1    1.00000000000000E+0
   2    1    1.00000000000000E+0
   4    1    1.00000000000000E+0
   6    1    1.00000000000000E+0

LoadCaseCombination     281   "SLE_05"
   1    1    1.00000000000000E+0
   2    1    1.00000000000000E+0
   3    1    1.00000000000000E+0
   7    1    1.00000000000000E+0

LoadCaseCombination     282   "SLE_06"
   1    1    1.00000000000000E+0
   2    1    1.00000000000000E+0
   4    1    1.00000000000000E+0
   7    1    1.00000000000000E+0

LoadCaseCombination     283   "SLE_07"
   1    1    1.00000000000000E+0
   2    1    1.00000000000000E+0
   3    1    1.00000000000000E+0
   9    1    1.00000000000000E+0

LoadCaseCombination     284   "SLE_08"
   1    1    1.00000000000000E+0
   2    1    1.00000000000000E+0
   4    1    1.00000000000000E+0
   9    1    1.00000000000000E+0

LoadCaseCombination     285   "SLE_09"
   1    1    1.00000000000000E+0
   2    1    1.00000000000000E+0
   3    1    1.00000000000000E+0
   8    1    1.00000000000000E+0

LoadCaseCombination     286   "SLE_10"
   1    1    1.00000000000000E+0
   2    1    1.00000000000000E+0
   4    1    1.00000000000000E+0
   8    1    1.00000000000000E+0

LoadCaseCombination     287   "SLE_11"
   1    1    1.00000000000000E+0
   2    1    1.00000000000000E+0
   3    1    1.00000000000000E+0
   10    1    1.00000000000000E+0

LoadCaseCombination     288   "SLE_12"
   1    1    1.00000000000000E+0
   2    1    1.00000000000000E+0
   4    1    1.00000000000000E+0
   10    1    1.00000000000000E+0
```

```
LoadCaseCombination     289   "SLE_13"
   1    1    1.00000000000000E+0
   2    1    1.00000000000000E+0
   3    1    1.00000000000000E+0
   11    1    1.00000000000000E+0

LoadCaseCombination     290   "SLE_14"
   1    1    1.00000000000000E+0
   2    1    1.00000000000000E+0
   4    1    1.00000000000000E+0
   11    1    1.00000000000000E+0

LoadCaseCombination     291   "SLE_15"
   1    1    1.00000000000000E+0
   2    1    1.00000000000000E+0
   3    1    1.00000000000000E+0
   12    1    1.00000000000000E+0

LoadCaseCombination     292   "SLE_16"
   1    1    1.00000000000000E+0
   2    1    1.00000000000000E+0
   4    1    1.00000000000000E+0
   12    1    1.00000000000000E+0

LoadCaseCombination     293   "SLE_17"
   1    1    1.00000000000000E+0
   2    1    1.00000000000000E+0
   3    1    1.00000000000000E+0
   5    1    1.00000000000000E+0
   7    1    6.00000000000000E-1

LoadCaseCombination     294   "SLE_18"
   1    1    1.00000000000000E+0
   2    1    1.00000000000000E+0
   4    1    1.00000000000000E+0
   5    1    1.00000000000000E+0
   7    1    6.00000000000000E-1

LoadCaseCombination     295   "SLE_19"
   1    1    1.00000000000000E+0
   2    1    1.00000000000000E+0
   3    1    1.00000000000000E+0
   5    1    1.00000000000000E+0
   9    1    6.00000000000000E-1

LoadCaseCombination     296   "SLE_20"
   1    1    1.00000000000000E+0
   2    1    1.00000000000000E+0
   4    1    1.00000000000000E+0
   5    1    1.00000000000000E+0
   9    1    6.00000000000000E-1

LoadCaseCombination     297   "SLE_21"
```

```
   1    1    1.00000000000000E+0
   2    1    1.00000000000000E+0
   3    1    1.00000000000000E+0
   5    1    1.00000000000000E+0
   11    1    6.00000000000000E-1

LoadCaseCombination     298   "SLE_22"
   1    1    1.00000000000000E+0
   2    1    1.00000000000000E+0
   4    1    1.00000000000000E+0
   5    1    1.00000000000000E+0
   11    1    6.00000000000000E-1

LoadCaseCombination     299   "SLE_23"
   1    1    1.00000000000000E+0
   2    1    1.00000000000000E+0
   3    1    1.00000000000000E+0
   5    1    1.00000000000000E+0
   12    1    6.00000000000000E-1

LoadCaseCombination     300   "SLE_24"
   1    1    1.00000000000000E+0
   2    1    1.00000000000000E+0
   4    1    1.00000000000000E+0
   5    1    1.00000000000000E+0
   12    1    6.00000000000000E-1

LoadCaseCombination     301   "SLE_25"
   1    1    1.00000000000000E+0
   2    1    1.00000000000000E+0
   3    1    1.00000000000000E+0
   5    1    1.00000000000000E+0
   7    1    6.00000000000000E-1
   11    1    6.00000000000000E-1

LoadCaseCombination     302   "SLE_26"
   1    1    1.00000000000000E+0
   2    1    1.00000000000000E+0
   4    1    1.00000000000000E+0
   5    1    1.00000000000000E+0
   7    1    6.00000000000000E-1
   11    1    6.00000000000000E-1

LoadCaseCombination     303   "SLE_27"
   1    1    1.00000000000000E+0
   2    1    1.00000000000000E+0
   3    1    1.00000000000000E+0
   5    1    1.00000000000000E+0
   9    1    6.00000000000000E-1
   12    1    6.00000000000000E-1

LoadCaseCombination     304   "SLE_28"
   1    1    1.00000000000000E+0
   2    1    1.00000000000000E+0
```

```
   4    1    1.00000000000000E+0
   5    1    1.00000000000000E+0
   9    1    6.00000000000000E-1
   12    1    6.00000000000000E-1

LoadCaseCombination     305   "SLE_29"
   1    1    1.00000000000000E+0
   2    1    1.00000000000000E+0
   3    1    1.00000000000000E+0
   6    1    1.00000000000000E+0
   7    1    6.00000000000000E-1

LoadCaseCombination     306   "SLE_30"
   1    1    1.00000000000000E+0
   2    1    1.00000000000000E+0
   4    1    1.00000000000000E+0
   6    1    1.00000000000000E+0
   7    1    6.00000000000000E-1

LoadCaseCombination     307   "SLE_31"
   1    1    1.00000000000000E+0
   2    1    1.00000000000000E+0
   3    1    1.00000000000000E+0
   6    1    1.00000000000000E+0
   9    1    6.00000000000000E-1

LoadCaseCombination     308   "SLE_32"
   1    1    1.00000000000000E+0
   2    1    1.00000000000000E+0
   4    1    1.00000000000000E+0
   6    1    1.00000000000000E+0
   9    1    6.00000000000000E-1

LoadCaseCombination     309   "SLE_33"
   1    1    1.00000000000000E+0
   2    1    1.00000000000000E+0
   3    1    1.00000000000000E+0
   6    1    1.00000000000000E+0
   8    1    8.00000000000000E-1

LoadCaseCombination     310   "SLE_34"
   1    1    1.00000000000000E+0
   2    1    1.00000000000000E+0
   4    1    1.00000000000000E+0
   6    1    1.00000000000000E+0
   8    1    8.00000000000000E-1

LoadCaseCombination     311   "SLE_35"
   1    1    1.00000000000000E+0
   2    1    1.00000000000000E+0
   3    1    1.00000000000000E+0
   6    1    1.00000000000000E+0
   10    1    8.00000000000000E-1
```

```
LoadCaseCombination     312   "SLE_36"
   1    1    1.00000000000000E+0
   2    1    1.00000000000000E+0
   4    1    1.00000000000000E+0
   6    1    1.00000000000000E+0
   10    1    8.00000000000000E-1

LoadCaseCombination     313   "SLE_37"
   1    1    1.00000000000000E+0
   2    1    1.00000000000000E+0
   3    1    1.00000000000000E+0
   6    1    1.00000000000000E+0
   11    1    6.00000000000000E-1

LoadCaseCombination     314   "SLE_38"
   1    1    1.00000000000000E+0
   2    1    1.00000000000000E+0
   4    1    1.00000000000000E+0
   6    1    1.00000000000000E+0
   11    1    6.00000000000000E-1

LoadCaseCombination     315   "SLE_39"
   1    1    1.00000000000000E+0
   2    1    1.00000000000000E+0
   3    1    1.00000000000000E+0
   6    1    1.00000000000000E+0
   12    1    6.00000000000000E-1

LoadCaseCombination     316   "SLE_40"
   1    1    1.00000000000000E+0
   2    1    1.00000000000000E+0
   4    1    1.00000000000000E+0
   6    1    1.00000000000000E+0
   12    1    6.00000000000000E-1

LoadCaseCombination     317   "SLE_41"
   1    1    1.00000000000000E+0
   2    1    1.00000000000000E+0
   3    1    1.00000000000000E+0
   6    1    1.00000000000000E+0
   7    1    6.00000000000000E-1
   8    1    8.00000000000000E-1

LoadCaseCombination     318   "SLE_42"
   1    1    1.00000000000000E+0
   2    1    1.00000000000000E+0
   4    1    1.00000000000000E+0
   6    1    1.00000000000000E+0
   7    1    6.00000000000000E-1
   8    1    8.00000000000000E-1

LoadCaseCombination     319   "SLE_43"
   1    1    1.00000000000000E+0
   2    1    1.00000000000000E+0
```

```
   3    1    1.00000000000000E+0
   6    1    1.00000000000000E+0
   9    1    6.00000000000000E-1
   10    1    8.00000000000000E-1

LoadCaseCombination     320   "SLE_44"
   1    1    1.00000000000000E+0
   2    1    1.00000000000000E+0
   4    1    1.00000000000000E+0
   6    1    1.00000000000000E+0
   9    1    6.00000000000000E-1
   10    1    8.00000000000000E-1

LoadCaseCombination     321   "SLE_45"
   1    1    1.00000000000000E+0
   2    1    1.00000000000000E+0
   3    1    1.00000000000000E+0
   6    1    1.00000000000000E+0
   7    1    6.00000000000000E-1
   11    1    6.00000000000000E-1

LoadCaseCombination     322   "SLE_46"
   1    1    1.00000000000000E+0
   2    1    1.00000000000000E+0
   4    1    1.00000000000000E+0
   6    1    1.00000000000000E+0
   7    1    6.00000000000000E-1
   11    1    6.00000000000000E-1

LoadCaseCombination     323   "SLE_47"
   1    1    1.00000000000000E+0
   2    1    1.00000000000000E+0
   3    1    1.00000000000000E+0
   6    1    1.00000000000000E+0
   9    1    6.00000000000000E-1
   12    1    6.00000000000000E-1

LoadCaseCombination     324   "SLE_48"
   1    1    1.00000000000000E+0
   2    1    1.00000000000000E+0
   4    1    1.00000000000000E+0
   6    1    1.00000000000000E+0
   9    1    6.00000000000000E-1
   12    1    6.00000000000000E-1

LoadCaseCombination     325   "SLE_49"
   1    1    1.00000000000000E+0
   2    1    1.00000000000000E+0
   3    1    1.00000000000000E+0
   6    1    1.00000000000000E+0
   8    1    8.00000000000000E-1
   11    1    6.00000000000000E-1

LoadCaseCombination     326   "SLE_50"
```

```
   1    1    1.00000000000000E+0
   2    1    1.00000000000000E+0
   4    1    1.00000000000000E+0
   6    1    1.00000000000000E+0
   8    1    8.00000000000000E-1
   11    1    6.00000000000000E-1

LoadCaseCombination     327   "SLE_51"
   1    1    1.00000000000000E+0
   2    1    1.00000000000000E+0
   3    1    1.00000000000000E+0
   6    1    1.00000000000000E+0
   10    1    8.00000000000000E-1
   12    1    6.00000000000000E-1

LoadCaseCombination     328   "SLE_52"
   1    1    1.00000000000000E+0
   2    1    1.00000000000000E+0
   4    1    1.00000000000000E+0
   6    1    1.00000000000000E+0
   10    1    8.00000000000000E-1
   12    1    6.00000000000000E-1

LoadCaseCombination     329   "SLE_53"
   1    1    1.00000000000000E+0
   2    1    1.00000000000000E+0
   3    1    1.00000000000000E+0
   6    1    1.00000000000000E+0
   7    1    6.00000000000000E-1
   8    1    8.00000000000000E-1
   11    1    6.00000000000000E-1

LoadCaseCombination     330   "SLE_54"
   1    1    1.00000000000000E+0
   2    1    1.00000000000000E+0
   4    1    1.00000000000000E+0
   6    1    1.00000000000000E+0
   7    1    6.00000000000000E-1
   8    1    8.00000000000000E-1
   11    1    6.00000000000000E-1

LoadCaseCombination     331   "SLE_55"
   1    1    1.00000000000000E+0
   2    1    1.00000000000000E+0
   3    1    1.00000000000000E+0
   6    1    1.00000000000000E+0
   9    1    6.00000000000000E-1
   10    1    8.00000000000000E-1
   12    1    6.00000000000000E-1

LoadCaseCombination     332   "SLE_56"
   1    1    1.00000000000000E+0
   2    1    1.00000000000000E+0
   4    1    1.00000000000000E+0
```

```
   6    1    1.00000000000000E+0
   9    1    6.00000000000000E-1
   10    1    8.00000000000000E-1
   12    1    6.00000000000000E-1

LoadCaseCombination     333   "SLE_57"
   1    1    1.00000000000000E+0
   2    1    1.00000000000000E+0
   3    1    1.00000000000000E+0
   6    1    7.00000000000000E-1
   7    1    1.00000000000000E+0

LoadCaseCombination     334   "SLE_58"
   1    1    1.00000000000000E+0
   2    1    1.00000000000000E+0
   4    1    1.00000000000000E+0
   6    1    7.00000000000000E-1
   7    1    1.00000000000000E+0

LoadCaseCombination     335   "SLE_59"
   1    1    1.00000000000000E+0
   2    1    1.00000000000000E+0
   3    1    1.00000000000000E+0
   6    1    7.00000000000000E-1
   9    1    1.00000000000000E+0

LoadCaseCombination     336   "SLE_60"
   1    1    1.00000000000000E+0
   2    1    1.00000000000000E+0
   4    1    1.00000000000000E+0
   6    1    7.00000000000000E-1
   9    1    1.00000000000000E+0

LoadCaseCombination     337   "SLE_61"
   1    1    1.00000000000000E+0
   2    1    1.00000000000000E+0
   3    1    1.00000000000000E+0
   7    1    1.00000000000000E+0
   8    1    8.00000000000000E-1

LoadCaseCombination     338   "SLE_62"
   1    1    1.00000000000000E+0
   2    1    1.00000000000000E+0
   4    1    1.00000000000000E+0
   7    1    1.00000000000000E+0
   8    1    8.00000000000000E-1

LoadCaseCombination     339   "SLE_63"
   1    1    1.00000000000000E+0
   2    1    1.00000000000000E+0
   3    1    1.00000000000000E+0
   9    1    1.00000000000000E+0
   8    1    8.00000000000000E-1
```

```
LoadCaseCombination     340   "SLE_64"
   1    1    1.00000000000000E+0
   2    1    1.00000000000000E+0
   4    1    1.00000000000000E+0
   9    1    1.00000000000000E+0
   8    1    8.00000000000000E-1

LoadCaseCombination     341   "SLE_65"
   1    1    1.00000000000000E+0
   2    1    1.00000000000000E+0
   3    1    1.00000000000000E+0
   7    1    1.00000000000000E+0
   10    1    8.00000000000000E-1

LoadCaseCombination     342   "SLE_66"
   1    1    1.00000000000000E+0
   2    1    1.00000000000000E+0
   4    1    1.00000000000000E+0
   7    1    1.00000000000000E+0
   10    1    8.00000000000000E-1

LoadCaseCombination     343   "SLE_67"
   1    1    1.00000000000000E+0
   2    1    1.00000000000000E+0
   3    1    1.00000000000000E+0
   9    1    1.00000000000000E+0
   10    1    8.00000000000000E-1

LoadCaseCombination     344   "SLE_68"
   1    1    1.00000000000000E+0
   2    1    1.00000000000000E+0
   4    1    1.00000000000000E+0
   9    1    1.00000000000000E+0
   10    1    8.00000000000000E-1

LoadCaseCombination     345   "SLE_69"
   1    1    1.00000000000000E+0
   2    1    1.00000000000000E+0
   3    1    1.00000000000000E+0
   7    1    1.00000000000000E+0
   11    1    6.00000000000000E-1

LoadCaseCombination     346   "SLE_70"
   1    1    1.00000000000000E+0
   2    1    1.00000000000000E+0
   4    1    1.00000000000000E+0
   7    1    1.00000000000000E+0
   11    1    6.00000000000000E-1

LoadCaseCombination     347   "SLE_71"
   1    1    1.00000000000000E+0
   2    1    1.00000000000000E+0
   3    1    1.00000000000000E+0
   9    1    1.00000000000000E+0
```

```
   11    1    6.00000000000000E-1

LoadCaseCombination     348   "SLE_72"
   1    1    1.00000000000000E+0
   2    1    1.00000000000000E+0
   4    1    1.00000000000000E+0
   9    1    1.00000000000000E+0
   11    1    6.00000000000000E-1

LoadCaseCombination     349   "SLE_73"
   1    1    1.00000000000000E+0
   2    1    1.00000000000000E+0
   3    1    1.00000000000000E+0
   7    1    1.00000000000000E+0
   12    1    6.00000000000000E-1

LoadCaseCombination     350   "SLE_74"
   1    1    1.00000000000000E+0
   2    1    1.00000000000000E+0
   4    1    1.00000000000000E+0
   7    1    1.00000000000000E+0
   12    1    6.00000000000000E-1

LoadCaseCombination     351   "SLE_75"
   1    1    1.00000000000000E+0
   2    1    1.00000000000000E+0
   3    1    1.00000000000000E+0
   9    1    1.00000000000000E+0
   12    1    6.00000000000000E-1

LoadCaseCombination     352   "SLE_76"
   1    1    1.00000000000000E+0
   2    1    1.00000000000000E+0
   4    1    1.00000000000000E+0
   9    1    1.00000000000000E+0
   12    1    6.00000000000000E-1

LoadCaseCombination     353   "SLE_77"
   1    1    1.00000000000000E+0
   2    1    1.00000000000000E+0
   3    1    1.00000000000000E+0
   6    1    7.00000000000000E-1
   7    1    1.00000000000000E+0
   8    1    8.00000000000000E-1

LoadCaseCombination     354   "SLE_78"
   1    1    1.00000000000000E+0
   2    1    1.00000000000000E+0
   4    1    1.00000000000000E+0
   6    1    7.00000000000000E-1
   7    1    1.00000000000000E+0
   8    1    8.00000000000000E-1

LoadCaseCombination     355   "SLE_79"
```

```
   1    1    1.00000000000000E+0
   2    1    1.00000000000000E+0
   3    1    1.00000000000000E+0
   6    1    7.00000000000000E-1
   9    1    1.00000000000000E+0
   8    1    8.00000000000000E-1

LoadCaseCombination     356   "SLE_80"
   1    1    1.00000000000000E+0
   2    1    1.00000000000000E+0
   4    1    1.00000000000000E+0
   6    1    7.00000000000000E-1
   9    1    1.00000000000000E+0
   8    1    8.00000000000000E-1

LoadCaseCombination     357   "SLE_81"
   1    1    1.00000000000000E+0
   2    1    1.00000000000000E+0
   3    1    1.00000000000000E+0
   6    1    7.00000000000000E-1
   7    1    1.00000000000000E+0
   10    1    8.00000000000000E-1

LoadCaseCombination     358   "SLE_82"
   1    1    1.00000000000000E+0
   2    1    1.00000000000000E+0
   4    1    1.00000000000000E+0
   6    1    7.00000000000000E-1
   7    1    1.00000000000000E+0
   10    1    8.00000000000000E-1

LoadCaseCombination     359   "SLE_83"
   1    1    1.00000000000000E+0
   2    1    1.00000000000000E+0
   3    1    1.00000000000000E+0
   6    1    7.00000000000000E-1
   9    1    1.00000000000000E+0
   10    1    8.00000000000000E-1

LoadCaseCombination     360   "SLE_84"
   1    1    1.00000000000000E+0
   2    1    1.00000000000000E+0
   4    1    1.00000000000000E+0
   6    1    7.00000000000000E-1
   9    1    1.00000000000000E+0
   10    1    8.00000000000000E-1

LoadCaseCombination     361   "SLE_85"
   1    1    1.00000000000000E+0
   2    1    1.00000000000000E+0
   3    1    1.00000000000000E+0
   6    1    7.00000000000000E-1
   7    1    1.00000000000000E+0
   11    1    6.00000000000000E-1
```

```
LoadCaseCombination     362   "SLE_86"
   1    1    1.00000000000000E+0
   2    1    1.00000000000000E+0
   4    1    1.00000000000000E+0
   6    1    7.00000000000000E-1
   7    1    1.00000000000000E+0
   11    1    6.00000000000000E-1

LoadCaseCombination     363   "SLE_87"
   1    1    1.00000000000000E+0
   2    1    1.00000000000000E+0
   3    1    1.00000000000000E+0
   6    1    7.00000000000000E-1
   9    1    1.00000000000000E+0
   11    1    6.00000000000000E-1

LoadCaseCombination     364   "SLE_88"
   1    1    1.00000000000000E+0
   2    1    1.00000000000000E+0
   4    1    1.00000000000000E+0
   6    1    7.00000000000000E-1
   9    1    1.00000000000000E+0
   11    1    6.00000000000000E-1

LoadCaseCombination     365   "SLE_89"
   1    1    1.00000000000000E+0
   2    1    1.00000000000000E+0
   3    1    1.00000000000000E+0
   6    1    7.00000000000000E-1
   7    1    1.00000000000000E+0
   12    1    6.00000000000000E-1

LoadCaseCombination     366   "SLE_90"
   1    1    1.00000000000000E+0
   2    1    1.00000000000000E+0
   4    1    1.00000000000000E+0
   6    1    7.00000000000000E-1
   7    1    1.00000000000000E+0
   12    1    6.00000000000000E-1

LoadCaseCombination     367   "SLE_91"
   1    1    1.00000000000000E+0
   2    1    1.00000000000000E+0
   3    1    1.00000000000000E+0
   6    1    7.00000000000000E-1
   9    1    1.00000000000000E+0
   12    1    6.00000000000000E-1

LoadCaseCombination     368   "SLE_92"
   1    1    1.00000000000000E+0
   2    1    1.00000000000000E+0
   4    1    1.00000000000000E+0
   6    1    7.00000000000000E-1
```

```
   9    1    1.00000000000000E+0
   12    1    6.00000000000000E-1

LoadCaseCombination     369   "SLE_93"
   1    1    1.00000000000000E+0
   2    1    1.00000000000000E+0
   3    1    1.00000000000000E+0
   7    1    1.00000000000000E+0
   8    1    8.00000000000000E-1
   11    1    6.00000000000000E-1

LoadCaseCombination     370   "SLE_94"
   1    1    1.00000000000000E+0
   2    1    1.00000000000000E+0
   4    1    1.00000000000000E+0
   7    1    1.00000000000000E+0
   8    1    8.00000000000000E-1
   11    1    6.00000000000000E-1

LoadCaseCombination     371   "SLE_95"
   1    1    1.00000000000000E+0
   2    1    1.00000000000000E+0
   3    1    1.00000000000000E+0
   9    1    1.00000000000000E+0
   8    1    8.00000000000000E-1
   11    1    6.00000000000000E-1

LoadCaseCombination     372   "SLE_96"
   1    1    1.00000000000000E+0
   2    1    1.00000000000000E+0
   4    1    1.00000000000000E+0
   9    1    1.00000000000000E+0
   8    1    8.00000000000000E-1
   11    1    6.00000000000000E-1

LoadCaseCombination     373   "SLE_97"
   1    1    1.00000000000000E+0
   2    1    1.00000000000000E+0
   3    1    1.00000000000000E+0
   7    1    1.00000000000000E+0
   8    1    8.00000000000000E-1
   12    1    6.00000000000000E-1

LoadCaseCombination     374   "SLE_98"
   1    1    1.00000000000000E+0
   2    1    1.00000000000000E+0
   4    1    1.00000000000000E+0
   7    1    1.00000000000000E+0
   8    1    8.00000000000000E-1
   12    1    6.00000000000000E-1

LoadCaseCombination     375   "SLE_99"
   1    1    1.00000000000000E+0
   2    1    1.00000000000000E+0
```

```
   3    1    1.00000000000000E+0
   9    1    1.00000000000000E+0
   8    1    8.00000000000000E-1
   12    1    6.00000000000000E-1

LoadCaseCombination     376   "SLE_100"
   1    1    1.00000000000000E+0
   2    1    1.00000000000000E+0
   4    1    1.00000000000000E+0
   9    1    1.00000000000000E+0
   8    1    8.00000000000000E-1
   12    1    6.00000000000000E-1

LoadCaseCombination     377   "SLE_101"
   1    1    1.00000000000000E+0
   2    1    1.00000000000000E+0
   3    1    1.00000000000000E+0
   7    1    1.00000000000000E+0
   10    1    8.00000000000000E-1
   11    1    6.00000000000000E-1

LoadCaseCombination     378   "SLE_102"
   1    1    1.00000000000000E+0
   2    1    1.00000000000000E+0
   4    1    1.00000000000000E+0
   7    1    1.00000000000000E+0
   10    1    8.00000000000000E-1
   11    1    6.00000000000000E-1

LoadCaseCombination     379   "SLE_103"
   1    1    1.00000000000000E+0
   2    1    1.00000000000000E+0
   3    1    1.00000000000000E+0
   9    1    1.00000000000000E+0
   10    1    8.00000000000000E-1
   11    1    6.00000000000000E-1

LoadCaseCombination     380   "SLE_104"
   1    1    1.00000000000000E+0
   2    1    1.00000000000000E+0
   4    1    1.00000000000000E+0
   9    1    1.00000000000000E+0
   10    1    8.00000000000000E-1
   11    1    6.00000000000000E-1

LoadCaseCombination     381   "SLE_105"
   1    1    1.00000000000000E+0
   2    1    1.00000000000000E+0
   3    1    1.00000000000000E+0
   7    1    1.00000000000000E+0
   10    1    8.00000000000000E-1
   12    1    6.00000000000000E-1

LoadCaseCombination     382   "SLE_106"
```

```
   1    1    1.00000000000000E+0
   2    1    1.00000000000000E+0
   4    1    1.00000000000000E+0
   7    1    1.00000000000000E+0
   10    1    8.00000000000000E-1
   12    1    6.00000000000000E-1

LoadCaseCombination     383   "SLE_107"
   1    1    1.00000000000000E+0
   2    1    1.00000000000000E+0
   3    1    1.00000000000000E+0
   9    1    1.00000000000000E+0
   10    1    8.00000000000000E-1
   12    1    6.00000000000000E-1

LoadCaseCombination     384   "SLE_108"
   1    1    1.00000000000000E+0
   2    1    1.00000000000000E+0
   4    1    1.00000000000000E+0
   9    1    1.00000000000000E+0
   10    1    8.00000000000000E-1
   12    1    6.00000000000000E-1

LoadCaseCombination     385   "SLE_109"
   1    1    1.00000000000000E+0
   2    1    1.00000000000000E+0
   3    1    1.00000000000000E+0
   6    1    7.00000000000000E-1
   7    1    1.00000000000000E+0
   8    1    8.00000000000000E-1
   11    1    6.00000000000000E-1

LoadCaseCombination     386   "SLE_110"
   1    1    1.00000000000000E+0
   2    1    1.00000000000000E+0
   4    1    1.00000000000000E+0
   6    1    7.00000000000000E-1
   7    1    1.00000000000000E+0
   8    1    8.00000000000000E-1
   11    1    6.00000000000000E-1

LoadCaseCombination     387   "SLE_111"
   1    1    1.00000000000000E+0
   2    1    1.00000000000000E+0
   3    1    1.00000000000000E+0
   6    1    7.00000000000000E-1
   9    1    1.00000000000000E+0
   8    1    8.00000000000000E-1
   11    1    6.00000000000000E-1

LoadCaseCombination     388   "SLE_112"
   1    1    1.00000000000000E+0
   2    1    1.00000000000000E+0
   4    1    1.00000000000000E+0
```

```
   6    1    7.00000000000000E-1
   9    1    1.00000000000000E+0
   8    1    8.00000000000000E-1
   11    1    6.00000000000000E-1

LoadCaseCombination     389   "SLE_113"
   1    1    1.00000000000000E+0
   2    1    1.00000000000000E+0
   3    1    1.00000000000000E+0
   6    1    7.00000000000000E-1
   7    1    1.00000000000000E+0
   8    1    8.00000000000000E-1
   12    1    6.00000000000000E-1

LoadCaseCombination     390   "SLE_114"
   1    1    1.00000000000000E+0
   2    1    1.00000000000000E+0
   4    1    1.00000000000000E+0
   6    1    7.00000000000000E-1
   7    1    1.00000000000000E+0
   8    1    8.00000000000000E-1
   12    1    6.00000000000000E-1

LoadCaseCombination     391   "SLE_115"
   1    1    1.00000000000000E+0
   2    1    1.00000000000000E+0
   3    1    1.00000000000000E+0
   6    1    7.00000000000000E-1
   9    1    1.00000000000000E+0
   8    1    8.00000000000000E-1
   12    1    6.00000000000000E-1

LoadCaseCombination     392   "SLE_116"
   1    1    1.00000000000000E+0
   2    1    1.00000000000000E+0
   4    1    1.00000000000000E+0
   6    1    7.00000000000000E-1
   9    1    1.00000000000000E+0
   8    1    8.00000000000000E-1
   12    1    6.00000000000000E-1

LoadCaseCombination     393   "SLE_117"
   1    1    1.00000000000000E+0
   2    1    1.00000000000000E+0
   3    1    1.00000000000000E+0
   6    1    7.00000000000000E-1
   7    1    1.00000000000000E+0
   10    1    8.00000000000000E-1
   11    1    6.00000000000000E-1

LoadCaseCombination     394   "SLE_118"
   1    1    1.00000000000000E+0
   2    1    1.00000000000000E+0
   4    1    1.00000000000000E+0
```

```
   6    1    7.00000000000000E-1
   7    1    1.00000000000000E+0
   10    1    8.00000000000000E-1
   11    1    6.00000000000000E-1

LoadCaseCombination     395   "SLE_119"
   1    1    1.00000000000000E+0
   2    1    1.00000000000000E+0
   3    1    1.00000000000000E+0
   6    1    7.00000000000000E-1
   9    1    1.00000000000000E+0
   10    1    8.00000000000000E-1
   11    1    6.00000000000000E-1

LoadCaseCombination     396   "SLE_120"
   1    1    1.00000000000000E+0
   2    1    1.00000000000000E+0
   4    1    1.00000000000000E+0
   6    1    7.00000000000000E-1
   9    1    1.00000000000000E+0
   10    1    8.00000000000000E-1
   11    1    6.00000000000000E-1

LoadCaseCombination     397   "SLE_121"
   1    1    1.00000000000000E+0
   2    1    1.00000000000000E+0
   3    1    1.00000000000000E+0
   6    1    7.00000000000000E-1
   7    1    1.00000000000000E+0
   10    1    8.00000000000000E-1
   12    1    6.00000000000000E-1

LoadCaseCombination     398   "SLE_122"
   1    1    1.00000000000000E+0
   2    1    1.00000000000000E+0
   4    1    1.00000000000000E+0
   6    1    7.00000000000000E-1
   7    1    1.00000000000000E+0
   10    1    8.00000000000000E-1
   12    1    6.00000000000000E-1

LoadCaseCombination     399   "SLE_123"
   1    1    1.00000000000000E+0
   2    1    1.00000000000000E+0
   3    1    1.00000000000000E+0
   6    1    7.00000000000000E-1
   9    1    1.00000000000000E+0
   10    1    8.00000000000000E-1
   12    1    6.00000000000000E-1

LoadCaseCombination     400   "SLE_124"
   1    1    1.00000000000000E+0
   2    1    1.00000000000000E+0
   4    1    1.00000000000000E+0
```

```
   6    1    7.00000000000000E-1
   9    1    1.00000000000000E+0
   10    1    8.00000000000000E-1
   12    1    6.00000000000000E-1

LoadCaseCombination     401   "SLE_125"
   1    1    1.00000000000000E+0
   2    1    1.00000000000000E+0
   3    1    1.00000000000000E+0
   6    1    7.00000000000000E-1
   8    1    1.00000000000000E+0

LoadCaseCombination     402   "SLE_126"
   1    1    1.00000000000000E+0
   2    1    1.00000000000000E+0
   4    1    1.00000000000000E+0
   6    1    7.00000000000000E-1
   8    1    1.00000000000000E+0

LoadCaseCombination     403   "SLE_127"
   1    1    1.00000000000000E+0
   2    1    1.00000000000000E+0
   3    1    1.00000000000000E+0
   6    1    7.00000000000000E-1
   10    1    1.00000000000000E+0

LoadCaseCombination     404   "SLE_128"
   1    1    1.00000000000000E+0
   2    1    1.00000000000000E+0
   4    1    1.00000000000000E+0
   6    1    7.00000000000000E-1
   10    1    1.00000000000000E+0

LoadCaseCombination     405   "SLE_129"
   1    1    1.00000000000000E+0
   2    1    1.00000000000000E+0
   3    1    1.00000000000000E+0
   7    1    6.00000000000000E-1
   8    1    1.00000000000000E+0

LoadCaseCombination     406   "SLE_130"
   1    1    1.00000000000000E+0
   2    1    1.00000000000000E+0
   4    1    1.00000000000000E+0
   7    1    6.00000000000000E-1
   8    1    1.00000000000000E+0

LoadCaseCombination     407   "SLE_131"
   1    1    1.00000000000000E+0
   2    1    1.00000000000000E+0
   3    1    1.00000000000000E+0
   9    1    6.00000000000000E-1
   8    1    1.00000000000000E+0
```

```
LoadCaseCombination     408   "SLE_132"
   1    1    1.00000000000000E+0
   2    1    1.00000000000000E+0
   4    1    1.00000000000000E+0
   9    1    6.00000000000000E-1
   8    1    1.00000000000000E+0

LoadCaseCombination     409   "SLE_133"
   1    1    1.00000000000000E+0
   2    1    1.00000000000000E+0
   3    1    1.00000000000000E+0
   7    1    6.00000000000000E-1
   10    1    1.00000000000000E+0

LoadCaseCombination     410   "SLE_134"
   1    1    1.00000000000000E+0
   2    1    1.00000000000000E+0
   4    1    1.00000000000000E+0
   7    1    6.00000000000000E-1
   10    1    1.00000000000000E+0

LoadCaseCombination     411   "SLE_135"
   1    1    1.00000000000000E+0
   2    1    1.00000000000000E+0
   3    1    1.00000000000000E+0
   9    1    6.00000000000000E-1
   10    1    1.00000000000000E+0

LoadCaseCombination     412   "SLE_136"
   1    1    1.00000000000000E+0
   2    1    1.00000000000000E+0
   4    1    1.00000000000000E+0
   9    1    6.00000000000000E-1
   10    1    1.00000000000000E+0

LoadCaseCombination     413   "SLE_137"
   1    1    1.00000000000000E+0
   2    1    1.00000000000000E+0
   3    1    1.00000000000000E+0
   8    1    1.00000000000000E+0
   11    1    6.00000000000000E-1

LoadCaseCombination     414   "SLE_138"
   1    1    1.00000000000000E+0
   2    1    1.00000000000000E+0
   4    1    1.00000000000000E+0
   8    1    1.00000000000000E+0
   11    1    6.00000000000000E-1

LoadCaseCombination     415   "SLE_139"
   1    1    1.00000000000000E+0
   2    1    1.00000000000000E+0
   3    1    1.00000000000000E+0
   8    1    1.00000000000000E+0
```

```
   11    1    6.00000000000000E-1

LoadCaseCombination     416   "SLE_140"
   1    1    1.00000000000000E+0
   2    1    1.00000000000000E+0
   4    1    1.00000000000000E+0
   8    1    1.00000000000000E+0
   11    1    6.00000000000000E-1

LoadCaseCombination     417   "SLE_141"
   1    1    1.00000000000000E+0
   2    1    1.00000000000000E+0
   3    1    1.00000000000000E+0
   10    1    1.00000000000000E+0
   12    1    6.00000000000000E-1

LoadCaseCombination     418   "SLE_142"
   1    1    1.00000000000000E+0
   2    1    1.00000000000000E+0
   4    1    1.00000000000000E+0
   10    1    1.00000000000000E+0
   12    1    6.00000000000000E-1

LoadCaseCombination     419   "SLE_143"
   1    1    1.00000000000000E+0
   2    1    1.00000000000000E+0
   3    1    1.00000000000000E+0
   10    1    1.00000000000000E+0
   12    1    6.00000000000000E-1

LoadCaseCombination     420   "SLE_144"
   1    1    1.00000000000000E+0
   2    1    1.00000000000000E+0
   4    1    1.00000000000000E+0
   10    1    1.00000000000000E+0
   12    1    6.00000000000000E-1

LoadCaseCombination     421   "SLE_145"
   1    1    1.00000000000000E+0
   2    1    1.00000000000000E+0
   3    1    1.00000000000000E+0
   6    1    7.00000000000000E-1
   7    1    6.00000000000000E-1
   8    1    1.00000000000000E+0

LoadCaseCombination     422   "SLE_146"
   1    1    1.00000000000000E+0
   2    1    1.00000000000000E+0
   4    1    1.00000000000000E+0
   6    1    7.00000000000000E-1
   7    1    6.00000000000000E-1
   8    1    1.00000000000000E+0

LoadCaseCombination     423   "SLE_147"
```

```
   1    1    1.00000000000000E+0
   2    1    1.00000000000000E+0
   3    1    1.00000000000000E+0
   6    1    7.00000000000000E-1
   9    1    6.00000000000000E-1
   8    1    1.00000000000000E+0

LoadCaseCombination     424   "SLE_148"
   1    1    1.00000000000000E+0
   2    1    1.00000000000000E+0
   4    1    1.00000000000000E+0
   6    1    7.00000000000000E-1
   9    1    6.00000000000000E-1
   8    1    1.00000000000000E+0

LoadCaseCombination     425   "SLE_149"
   1    1    1.00000000000000E+0
   2    1    1.00000000000000E+0
   3    1    1.00000000000000E+0
   6    1    7.00000000000000E-1
   7    1    6.00000000000000E-1
   10    1    1.00000000000000E+0

LoadCaseCombination     426   "SLE_150"
   1    1    1.00000000000000E+0
   2    1    1.00000000000000E+0
   4    1    1.00000000000000E+0
   6    1    7.00000000000000E-1
   7    1    6.00000000000000E-1
   10    1    1.00000000000000E+0

LoadCaseCombination     427   "SLE_151"
   1    1    1.00000000000000E+0
   2    1    1.00000000000000E+0
   3    1    1.00000000000000E+0
   6    1    7.00000000000000E-1
   9    1    6.00000000000000E-1
   10    1    1.00000000000000E+0

LoadCaseCombination     428   "SLE_152"
   1    1    1.00000000000000E+0
   2    1    1.00000000000000E+0
   4    1    1.00000000000000E+0
   6    1    7.00000000000000E-1
   9    1    6.00000000000000E-1
   10    1    1.00000000000000E+0

LoadCaseCombination     429   "SLE_153"
   1    1    1.00000000000000E+0
   2    1    1.00000000000000E+0
   3    1    1.00000000000000E+0
   6    1    7.00000000000000E-1
   8    1    1.00000000000000E+0
   11    1    6.00000000000000E-1
```

```
LoadCaseCombination     430   "SLE_154"
   1    1    1.00000000000000E+0
   2    1    1.00000000000000E+0
   4    1    1.00000000000000E+0
   6    1    7.00000000000000E-1
   8    1    1.00000000000000E+0
   11    1    6.00000000000000E-1

LoadCaseCombination     431   "SLE_155"
   1    1    1.00000000000000E+0
   2    1    1.00000000000000E+0
   3    1    1.00000000000000E+0
   6    1    7.00000000000000E-1
   8    1    1.00000000000000E+0
   11    1    6.00000000000000E-1

LoadCaseCombination     432   "SLE_156"
   1    1    1.00000000000000E+0
   2    1    1.00000000000000E+0
   4    1    1.00000000000000E+0
   6    1    7.00000000000000E-1
   8    1    1.00000000000000E+0
   11    1    6.00000000000000E-1

LoadCaseCombination     433   "SLE_157"
   1    1    1.00000000000000E+0
   2    1    1.00000000000000E+0
   3    1    1.00000000000000E+0
   6    1    7.00000000000000E-1
   10    1    1.00000000000000E+0
   12    1    6.00000000000000E-1

LoadCaseCombination     434   "SLE_158"
   1    1    1.00000000000000E+0
   2    1    1.00000000000000E+0
   4    1    1.00000000000000E+0
   6    1    7.00000000000000E-1
   10    1    1.00000000000000E+0
   12    1    6.00000000000000E-1

LoadCaseCombination     435   "SLE_159"
   1    1    1.00000000000000E+0
   2    1    1.00000000000000E+0
   3    1    1.00000000000000E+0
   6    1    7.00000000000000E-1
   10    1    1.00000000000000E+0
   12    1    6.00000000000000E-1

LoadCaseCombination     436   "SLE_160"
   1    1    1.00000000000000E+0
   2    1    1.00000000000000E+0
   4    1    1.00000000000000E+0
   6    1    7.00000000000000E-1
```

```
   10    1    1.00000000000000E+0
   12    1    6.00000000000000E-1

LoadCaseCombination     437   "SLE_161"
   1    1    1.00000000000000E+0
   2    1    1.00000000000000E+0
   3    1    1.00000000000000E+0
   7    1    6.00000000000000E-1
   8    1    1.00000000000000E+0
   11    1    6.00000000000000E-1

LoadCaseCombination     438   "SLE_162"
   1    1    1.00000000000000E+0
   2    1    1.00000000000000E+0
   4    1    1.00000000000000E+0
   7    1    6.00000000000000E-1
   8    1    1.00000000000000E+0
   11    1    6.00000000000000E-1

LoadCaseCombination     439   "SLE_163"
   1    1    1.00000000000000E+0
   2    1    1.00000000000000E+0
   3    1    1.00000000000000E+0
   9    1    6.00000000000000E-1
   8    1    1.00000000000000E+0
   11    1    6.00000000000000E-1

LoadCaseCombination     440   "SLE_164"
   1    1    1.00000000000000E+0
   2    1    1.00000000000000E+0
   4    1    1.00000000000000E+0
   9    1    6.00000000000000E-1
   8    1    1.00000000000000E+0
   11    1    6.00000000000000E-1

LoadCaseCombination     441   "SLE_165"
   1    1    1.00000000000000E+0
   2    1    1.00000000000000E+0
   3    1    1.00000000000000E+0
   7    1    6.00000000000000E-1
   8    1    1.00000000000000E+0
   12    1    6.00000000000000E-1

LoadCaseCombination     442   "SLE_166"
   1    1    1.00000000000000E+0
   2    1    1.00000000000000E+0
   4    1    1.00000000000000E+0
   7    1    6.00000000000000E-1
   8    1    1.00000000000000E+0
   12    1    6.00000000000000E-1

LoadCaseCombination     443   "SLE_167"
   1    1    1.00000000000000E+0
   2    1    1.00000000000000E+0
```

```
   3    1    1.00000000000000E+0
   9    1    6.00000000000000E-1
   8    1    1.00000000000000E+0
   12    1    6.00000000000000E-1

LoadCaseCombination     444   "SLE_168"
   1    1    1.00000000000000E+0
   2    1    1.00000000000000E+0
   4    1    1.00000000000000E+0
   9    1    6.00000000000000E-1
   8    1    1.00000000000000E+0
   12    1    6.00000000000000E-1

LoadCaseCombination     445   "SLE_169"
   1    1    1.00000000000000E+0
   2    1    1.00000000000000E+0
   3    1    1.00000000000000E+0
   7    1    6.00000000000000E-1
   10    1    1.00000000000000E+0
   11    1    6.00000000000000E-1

LoadCaseCombination     446   "SLE_170"
   1    1    1.00000000000000E+0
   2    1    1.00000000000000E+0
   4    1    1.00000000000000E+0
   7    1    6.00000000000000E-1
   10    1    1.00000000000000E+0
   11    1    6.00000000000000E-1

LoadCaseCombination     447   "SLE_171"
   1    1    1.00000000000000E+0
   2    1    1.00000000000000E+0
   3    1    1.00000000000000E+0
   9    1    6.00000000000000E-1
   10    1    1.00000000000000E+0
   11    1    6.00000000000000E-1

LoadCaseCombination     448   "SLE_172"
   1    1    1.00000000000000E+0
   2    1    1.00000000000000E+0
   4    1    1.00000000000000E+0
   9    1    6.00000000000000E-1
   10    1    1.00000000000000E+0
   11    1    6.00000000000000E-1

LoadCaseCombination     449   "SLE_173"
   1    1    1.00000000000000E+0
   2    1    1.00000000000000E+0
   3    1    1.00000000000000E+0
   7    1    6.00000000000000E-1
   10    1    1.00000000000000E+0
   12    1    6.00000000000000E-1

LoadCaseCombination     450   "SLE_174"
```

```
   1    1    1.00000000000000E+0
   2    1    1.00000000000000E+0
   4    1    1.00000000000000E+0
   7    1    6.00000000000000E-1
   10    1    1.00000000000000E+0
   12    1    6.00000000000000E-1

LoadCaseCombination     451   "SLE_175"
   1    1    1.00000000000000E+0
   2    1    1.00000000000000E+0
   3    1    1.00000000000000E+0
   9    1    6.00000000000000E-1
   10    1    1.00000000000000E+0
   12    1    6.00000000000000E-1

LoadCaseCombination     452   "SLE_176"
   1    1    1.00000000000000E+0
   2    1    1.00000000000000E+0
   4    1    1.00000000000000E+0
   9    1    6.00000000000000E-1
   10    1    1.00000000000000E+0
   12    1    6.00000000000000E-1

LoadCaseCombination     453   "SLE_177"
   1    1    1.00000000000000E+0
   2    1    1.00000000000000E+0
   3    1    1.00000000000000E+0
   6    1    7.00000000000000E-1
   7    1    6.00000000000000E-1
   8    1    1.00000000000000E+0
   11    1    6.00000000000000E-1

LoadCaseCombination     454   "SLE_178"
   1    1    1.00000000000000E+0
   2    1    1.00000000000000E+0
   4    1    1.00000000000000E+0
   6    1    7.00000000000000E-1
   7    1    6.00000000000000E-1
   8    1    1.00000000000000E+0
   11    1    6.00000000000000E-1

LoadCaseCombination     455   "SLE_179"
   1    1    1.00000000000000E+0
   2    1    1.00000000000000E+0
   3    1    1.00000000000000E+0
   6    1    7.00000000000000E-1
   9    1    6.00000000000000E-1
   8    1    1.00000000000000E+0
   11    1    6.00000000000000E-1

LoadCaseCombination     456   "SLE_180"
   1    1    1.00000000000000E+0
   2    1    1.00000000000000E+0
   4    1    1.00000000000000E+0
```

```
   6    1    7.00000000000000E-1
   9    1    6.00000000000000E-1
   8    1    1.00000000000000E+0
   11    1    6.00000000000000E-1

LoadCaseCombination     457   "SLE_181"
   1    1    1.00000000000000E+0
   2    1    1.00000000000000E+0
   3    1    1.00000000000000E+0
   6    1    7.00000000000000E-1
   7    1    6.00000000000000E-1
   8    1    1.00000000000000E+0
   12    1    6.00000000000000E-1

LoadCaseCombination     458   "SLE_182"
   1    1    1.00000000000000E+0
   2    1    1.00000000000000E+0
   4    1    1.00000000000000E+0
   6    1    7.00000000000000E-1
   7    1    6.00000000000000E-1
   8    1    1.00000000000000E+0
   12    1    6.00000000000000E-1

LoadCaseCombination     459   "SLE_183"
   1    1    1.00000000000000E+0
   2    1    1.00000000000000E+0
   3    1    1.00000000000000E+0
   6    1    7.00000000000000E-1
   9    1    6.00000000000000E-1
   8    1    1.00000000000000E+0
   12    1    6.00000000000000E-1

LoadCaseCombination     460   "SLE_184"
   1    1    1.00000000000000E+0
   2    1    1.00000000000000E+0
   4    1    1.00000000000000E+0
   6    1    7.00000000000000E-1
   9    1    6.00000000000000E-1
   8    1    1.00000000000000E+0
   12    1    6.00000000000000E-1

LoadCaseCombination     461   "SLE_185"
   1    1    1.00000000000000E+0
   2    1    1.00000000000000E+0
   3    1    1.00000000000000E+0
   6    1    7.00000000000000E-1
   7    1    6.00000000000000E-1
   10    1    1.00000000000000E+0
   11    1    6.00000000000000E-1

LoadCaseCombination     462   "SLE_186"
   1    1    1.00000000000000E+0
   2    1    1.00000000000000E+0
   4    1    1.00000000000000E+0
```

```
   6    1    7.00000000000000E-1
   7    1    6.00000000000000E-1
   10    1    1.00000000000000E+0
   11    1    6.00000000000000E-1

LoadCaseCombination     463   "SLE_187"
   1    1    1.00000000000000E+0
   2    1    1.00000000000000E+0
   3    1    1.00000000000000E+0
   6    1    7.00000000000000E-1
   9    1    6.00000000000000E-1
   10    1    1.00000000000000E+0
   11    1    6.00000000000000E-1

LoadCaseCombination     464   "SLE_188"
   1    1    1.00000000000000E+0
   2    1    1.00000000000000E+0
   4    1    1.00000000000000E+0
   6    1    7.00000000000000E-1
   9    1    6.00000000000000E-1
   10    1    1.00000000000000E+0
   11    1    6.00000000000000E-1

LoadCaseCombination     465   "SLE_189"
   1    1    1.00000000000000E+0
   2    1    1.00000000000000E+0
   3    1    1.00000000000000E+0
   6    1    7.00000000000000E-1
   7    1    6.00000000000000E-1
   10    1    1.00000000000000E+0
   12    1    6.00000000000000E-1

LoadCaseCombination     466   "SLE_190"
   1    1    1.00000000000000E+0
   2    1    1.00000000000000E+0
   4    1    1.00000000000000E+0
   6    1    7.00000000000000E-1
   7    1    6.00000000000000E-1
   10    1    1.00000000000000E+0
   12    1    6.00000000000000E-1

LoadCaseCombination     467   "SLE_191"
   1    1    1.00000000000000E+0
   2    1    1.00000000000000E+0
   3    1    1.00000000000000E+0
   6    1    7.00000000000000E-1
   9    1    6.00000000000000E-1
   10    1    1.00000000000000E+0
   12    1    6.00000000000000E-1

LoadCaseCombination     468   "SLE_192"
   1    1    1.00000000000000E+0
   2    1    1.00000000000000E+0
   4    1    1.00000000000000E+0
```

```
   6    1    7.00000000000000E-1
   9    1    6.00000000000000E-1
   10    1    1.00000000000000E+0
   12    1    6.00000000000000E-1

LoadCaseCombination     469   "SLE_193"
   1    1    1.00000000000000E+0
   2    1    1.00000000000000E+0
   3    1    1.00000000000000E+0
   6    1    7.00000000000000E-1
   11    1    1.00000000000000E+0

LoadCaseCombination     470   "SLE_194"
   1    1    1.00000000000000E+0
   2    1    1.00000000000000E+0
   4    1    1.00000000000000E+0
   6    1    7.00000000000000E-1
   11    1    1.00000000000000E+0

LoadCaseCombination     471   "SLE_195"
   1    1    1.00000000000000E+0
   2    1    1.00000000000000E+0
   3    1    1.00000000000000E+0
   6    1    7.00000000000000E-1
   12    1    1.00000000000000E+0

LoadCaseCombination     472   "SLE_196"
   1    1    1.00000000000000E+0
   2    1    1.00000000000000E+0
   4    1    1.00000000000000E+0
   6    1    7.00000000000000E-1
   12    1    1.00000000000000E+0

LoadCaseCombination     473   "SLE_197"
   1    1    1.00000000000000E+0
   2    1    1.00000000000000E+0
   3    1    1.00000000000000E+0
   7    1    6.00000000000000E-1
   11    1    1.00000000000000E+0

LoadCaseCombination     474   "SLE_198"
   1    1    1.00000000000000E+0
   2    1    1.00000000000000E+0
   4    1    1.00000000000000E+0
   7    1    6.00000000000000E-1
   11    1    1.00000000000000E+0

LoadCaseCombination     475   "SLE_199"
   1    1    1.00000000000000E+0
   2    1    1.00000000000000E+0
   3    1    1.00000000000000E+0
   9    1    6.00000000000000E-1
   11    1    1.00000000000000E+0
```

```
LoadCaseCombination     476   "SLE_200"
   1    1    1.00000000000000E+0
   2    1    1.00000000000000E+0
   4    1    1.00000000000000E+0
   9    1    6.00000000000000E-1
   11    1    1.00000000000000E+0

LoadCaseCombination     477   "SLE_201"
   1    1    1.00000000000000E+0
   2    1    1.00000000000000E+0
   3    1    1.00000000000000E+0
   7    1    6.00000000000000E-1
   12    1    1.00000000000000E+0

LoadCaseCombination     478   "SLE_202"
   1    1    1.00000000000000E+0
   2    1    1.00000000000000E+0
   4    1    1.00000000000000E+0
   7    1    6.00000000000000E-1
   12    1    1.00000000000000E+0

LoadCaseCombination     479   "SLE_203"
   1    1    1.00000000000000E+0
   2    1    1.00000000000000E+0
   3    1    1.00000000000000E+0
   9    1    6.00000000000000E-1
   12    1    1.00000000000000E+0

LoadCaseCombination     480   "SLE_204"
   1    1    1.00000000000000E+0
   2    1    1.00000000000000E+0
   4    1    1.00000000000000E+0
   9    1    6.00000000000000E-1
   12    1    1.00000000000000E+0

LoadCaseCombination     481   "SLE_205"
   1    1    1.00000000000000E+0
   2    1    1.00000000000000E+0
   3    1    1.00000000000000E+0
   8    1    8.00000000000000E-1
   11    1    1.00000000000000E+0

LoadCaseCombination     482   "SLE_206"
   1    1    1.00000000000000E+0
   2    1    1.00000000000000E+0
   4    1    1.00000000000000E+0
   8    1    8.00000000000000E-1
   11    1    1.00000000000000E+0

LoadCaseCombination     483   "SLE_207"
   1    1    1.00000000000000E+0
   2    1    1.00000000000000E+0
   3    1    1.00000000000000E+0
   8    1    8.00000000000000E-1
```

```
   11    1    1.00000000000000E+0

LoadCaseCombination     484   "SLE_208"
   1    1    1.00000000000000E+0
   2    1    1.00000000000000E+0
   4    1    1.00000000000000E+0
   8    1    8.00000000000000E-1
   11    1    1.00000000000000E+0

LoadCaseCombination     485   "SLE_209"
   1    1    1.00000000000000E+0
   2    1    1.00000000000000E+0
   3    1    1.00000000000000E+0
   10    1    8.00000000000000E-1
   12    1    1.00000000000000E+0

LoadCaseCombination     486   "SLE_210"
   1    1    1.00000000000000E+0
   2    1    1.00000000000000E+0
   4    1    1.00000000000000E+0
   10    1    8.00000000000000E-1
   12    1    1.00000000000000E+0

LoadCaseCombination     487   "SLE_211"
   1    1    1.00000000000000E+0
   2    1    1.00000000000000E+0
   3    1    1.00000000000000E+0
   10    1    8.00000000000000E-1
   12    1    1.00000000000000E+0

LoadCaseCombination     488   "SLE_212"
   1    1    1.00000000000000E+0
   2    1    1.00000000000000E+0
   4    1    1.00000000000000E+0
   10    1    8.00000000000000E-1
   12    1    1.00000000000000E+0

LoadCaseCombination     489   "SLE_213"
   1    1    1.00000000000000E+0
   2    1    1.00000000000000E+0
   3    1    1.00000000000000E+0
   6    1    7.00000000000000E-1
   7    1    6.00000000000000E-1
   11    1    1.00000000000000E+0

LoadCaseCombination     490   "SLE_214"
   1    1    1.00000000000000E+0
   2    1    1.00000000000000E+0
   4    1    1.00000000000000E+0
   6    1    7.00000000000000E-1
   7    1    6.00000000000000E-1
   11    1    1.00000000000000E+0

LoadCaseCombination     491   "SLE_215"
```

```
   1    1    1.00000000000000E+0
   2    1    1.00000000000000E+0
   3    1    1.00000000000000E+0
   6    1    7.00000000000000E-1
   9    1    6.00000000000000E-1
   11    1    1.00000000000000E+0

LoadCaseCombination     492   "SLE_216"
   1    1    1.00000000000000E+0
   2    1    1.00000000000000E+0
   4    1    1.00000000000000E+0
   6    1    7.00000000000000E-1
   9    1    6.00000000000000E-1
   11    1    1.00000000000000E+0

LoadCaseCombination     493   "SLE_217"
   1    1    1.00000000000000E+0
   2    1    1.00000000000000E+0
   3    1    1.00000000000000E+0
   6    1    7.00000000000000E-1
   7    1    6.00000000000000E-1
   12    1    1.00000000000000E+0

LoadCaseCombination     494   "SLE_218"
   1    1    1.00000000000000E+0
   2    1    1.00000000000000E+0
   4    1    1.00000000000000E+0
   6    1    7.00000000000000E-1
   7    1    6.00000000000000E-1
   12    1    1.00000000000000E+0

LoadCaseCombination     495   "SLE_219"
   1    1    1.00000000000000E+0
   2    1    1.00000000000000E+0
   3    1    1.00000000000000E+0
   6    1    7.00000000000000E-1
   9    1    6.00000000000000E-1
   12    1    1.00000000000000E+0

LoadCaseCombination     496   "SLE_220"
   1    1    1.00000000000000E+0
   2    1    1.00000000000000E+0
   4    1    1.00000000000000E+0
   6    1    7.00000000000000E-1
   9    1    6.00000000000000E-1
   12    1    1.00000000000000E+0

LoadCaseCombination     497   "SLE_221"
   1    1    1.00000000000000E+0
   2    1    1.00000000000000E+0
   3    1    1.00000000000000E+0
   6    1    7.00000000000000E-1
   8    1    8.00000000000000E-1
   11    1    1.00000000000000E+0
```

```
LoadCaseCombination     498   "SLE_222"
   1    1    1.00000000000000E+0
   2    1    1.00000000000000E+0
   4    1    1.00000000000000E+0
   6    1    7.00000000000000E-1
   8    1    8.00000000000000E-1
   11    1    1.00000000000000E+0

LoadCaseCombination     499   "SLE_223"
   1    1    1.00000000000000E+0
   2    1    1.00000000000000E+0
   3    1    1.00000000000000E+0
   6    1    7.00000000000000E-1
   8    1    8.00000000000000E-1
   11    1    1.00000000000000E+0

LoadCaseCombination     500   "SLE_224"
   1    1    1.00000000000000E+0
   2    1    1.00000000000000E+0
   4    1    1.00000000000000E+0
   6    1    7.00000000000000E-1
   8    1    8.00000000000000E-1
   11    1    1.00000000000000E+0

LoadCaseCombination     501   "SLE_225"
   1    1    1.00000000000000E+0
   2    1    1.00000000000000E+0
   3    1    1.00000000000000E+0
   6    1    7.00000000000000E-1
   10    1    8.00000000000000E-1
   12    1    1.00000000000000E+0

LoadCaseCombination     502   "SLE_226"
   1    1    1.00000000000000E+0
   2    1    1.00000000000000E+0
   4    1    1.00000000000000E+0
   6    1    7.00000000000000E-1
   10    1    8.00000000000000E-1
   12    1    1.00000000000000E+0

LoadCaseCombination     503   "SLE_227"
   1    1    1.00000000000000E+0
   2    1    1.00000000000000E+0
   3    1    1.00000000000000E+0
   6    1    7.00000000000000E-1
   10    1    8.00000000000000E-1
   12    1    1.00000000000000E+0

LoadCaseCombination     504   "SLE_228"
   1    1    1.00000000000000E+0
   2    1    1.00000000000000E+0
   4    1    1.00000000000000E+0
   6    1    7.00000000000000E-1
```

```
   10    1    8.00000000000000E-1
   12    1    1.00000000000000E+0

LoadCaseCombination     505   "SLE_229"
   1    1    1.00000000000000E+0
   2    1    1.00000000000000E+0
   3    1    1.00000000000000E+0
   7    1    6.00000000000000E-1
   8    1    8.00000000000000E-1
   11    1    1.00000000000000E+0

LoadCaseCombination     506   "SLE_230"
   1    1    1.00000000000000E+0
   2    1    1.00000000000000E+0
   4    1    1.00000000000000E+0
   7    1    6.00000000000000E-1
   8    1    8.00000000000000E-1
   11    1    1.00000000000000E+0

LoadCaseCombination     507   "SLE_231"
   1    1    1.00000000000000E+0
   2    1    1.00000000000000E+0
   3    1    1.00000000000000E+0
   9    1    6.00000000000000E-1
   8    1    8.00000000000000E-1
   11    1    1.00000000000000E+0

LoadCaseCombination     508   "SLE_232"
   1    1    1.00000000000000E+0
   2    1    1.00000000000000E+0
   4    1    1.00000000000000E+0
   9    1    6.00000000000000E-1
   8    1    8.00000000000000E-1
   11    1    1.00000000000000E+0

LoadCaseCombination     509   "SLE_233"
   1    1    1.00000000000000E+0
   2    1    1.00000000000000E+0
   3    1    1.00000000000000E+0
   7    1    6.00000000000000E-1
   8    1    8.00000000000000E-1
   12    1    1.00000000000000E+0

LoadCaseCombination     510   "SLE_234"
   1    1    1.00000000000000E+0
   2    1    1.00000000000000E+0
   4    1    1.00000000000000E+0
   7    1    6.00000000000000E-1
   8    1    8.00000000000000E-1
   12    1    1.00000000000000E+0

LoadCaseCombination     511   "SLE_235"
   1    1    1.00000000000000E+0
   2    1    1.00000000000000E+0
```

```
   3    1    1.00000000000000E+0
   9    1    6.00000000000000E-1
   8    1    8.00000000000000E-1
   12    1    1.00000000000000E+0

LoadCaseCombination     512   "SLE_236"
   1    1    1.00000000000000E+0
   2    1    1.00000000000000E+0
   4    1    1.00000000000000E+0
   9    1    6.00000000000000E-1
   8    1    8.00000000000000E-1
   12    1    1.00000000000000E+0

LoadCaseCombination     513   "SLE_237"
   1    1    1.00000000000000E+0
   2    1    1.00000000000000E+0
   3    1    1.00000000000000E+0
   7    1    6.00000000000000E-1
   10    1    8.00000000000000E-1
   11    1    1.00000000000000E+0

LoadCaseCombination     514   "SLE_238"
   1    1    1.00000000000000E+0
   2    1    1.00000000000000E+0
   4    1    1.00000000000000E+0
   7    1    6.00000000000000E-1
   10    1    8.00000000000000E-1
   11    1    1.00000000000000E+0

LoadCaseCombination     515   "SLE_239"
   1    1    1.00000000000000E+0
   2    1    1.00000000000000E+0
   3    1    1.00000000000000E+0
   9    1    6.00000000000000E-1
   10    1    8.00000000000000E-1
   11    1    1.00000000000000E+0

LoadCaseCombination     516   "SLE_240"
   1    1    1.00000000000000E+0
   2    1    1.00000000000000E+0
   4    1    1.00000000000000E+0
   9    1    6.00000000000000E-1
   10    1    8.00000000000000E-1
   11    1    1.00000000000000E+0

LoadCaseCombination     517   "SLE_241"
   1    1    1.00000000000000E+0
   2    1    1.00000000000000E+0
   3    1    1.00000000000000E+0
   7    1    6.00000000000000E-1
   10    1    8.00000000000000E-1
   12    1    1.00000000000000E+0

LoadCaseCombination     518   "SLE_242"
```

```
   1    1    1.00000000000000E+0
   2    1    1.00000000000000E+0
   4    1    1.00000000000000E+0
   7    1    6.00000000000000E-1
   10    1    8.00000000000000E-1
   12    1    1.00000000000000E+0

LoadCaseCombination     519   "SLE_243"
   1    1    1.00000000000000E+0
   2    1    1.00000000000000E+0
   3    1    1.00000000000000E+0
   9    1    6.00000000000000E-1
   10    1    8.00000000000000E-1
   12    1    1.00000000000000E+0

LoadCaseCombination     520   "SLE_244"
   1    1    1.00000000000000E+0
   2    1    1.00000000000000E+0
   4    1    1.00000000000000E+0
   9    1    6.00000000000000E-1
   10    1    8.00000000000000E-1
   12    1    1.00000000000000E+0

LoadCaseCombination     521   "SLE_245"
   1    1    1.00000000000000E+0
   2    1    1.00000000000000E+0
   3    1    1.00000000000000E+0
   6    1    7.00000000000000E-1
   7    1    6.00000000000000E-1
   8    1    8.00000000000000E-1
   11    1    1.00000000000000E+0

LoadCaseCombination     522   "SLE_246"
   1    1    1.00000000000000E+0
   2    1    1.00000000000000E+0
   4    1    1.00000000000000E+0
   6    1    7.00000000000000E-1
   7    1    6.00000000000000E-1
   8    1    8.00000000000000E-1
   11    1    1.00000000000000E+0

LoadCaseCombination     523   "SLE_247"
   1    1    1.00000000000000E+0
   2    1    1.00000000000000E+0
   3    1    1.00000000000000E+0
   6    1    7.00000000000000E-1
   9    1    6.00000000000000E-1
   8    1    8.00000000000000E-1
   11    1    1.00000000000000E+0

LoadCaseCombination     524   "SLE_248"
   1    1    1.00000000000000E+0
   2    1    1.00000000000000E+0
   4    1    1.00000000000000E+0
```

```
   6    1    7.00000000000000E-1
   9    1    6.00000000000000E-1
   8    1    8.00000000000000E-1
   11    1    1.00000000000000E+0

LoadCaseCombination     525   "SLE_249"
   1    1    1.00000000000000E+0
   2    1    1.00000000000000E+0
   3    1    1.00000000000000E+0
   6    1    7.00000000000000E-1
   7    1    6.00000000000000E-1
   8    1    8.00000000000000E-1
   12    1    1.00000000000000E+0

LoadCaseCombination     526   "SLE_250"
   1    1    1.00000000000000E+0
   2    1    1.00000000000000E+0
   4    1    1.00000000000000E+0
   6    1    7.00000000000000E-1
   7    1    6.00000000000000E-1
   8    1    8.00000000000000E-1
   12    1    1.00000000000000E+0

LoadCaseCombination     527   "SLE_251"
   1    1    1.00000000000000E+0
   2    1    1.00000000000000E+0
   3    1    1.00000000000000E+0
   6    1    7.00000000000000E-1
   9    1    6.00000000000000E-1
   8    1    8.00000000000000E-1
   12    1    1.00000000000000E+0

LoadCaseCombination     528   "SLE_252"
   1    1    1.00000000000000E+0
   2    1    1.00000000000000E+0
   4    1    1.00000000000000E+0
   6    1    7.00000000000000E-1
   9    1    6.00000000000000E-1
   8    1    8.00000000000000E-1
   12    1    1.00000000000000E+0

LoadCaseCombination     529   "SLE_253"
   1    1    1.00000000000000E+0
   2    1    1.00000000000000E+0
   3    1    1.00000000000000E+0
   6    1    7.00000000000000E-1
   7    1    6.00000000000000E-1
   10    1    8.00000000000000E-1
   11    1    1.00000000000000E+0

LoadCaseCombination     530   "SLE_254"
   1    1    1.00000000000000E+0
   2    1    1.00000000000000E+0
   4    1    1.00000000000000E+0
```

```
   6    1    7.00000000000000E-1
   7    1    6.00000000000000E-1
   10    1    8.00000000000000E-1
   11    1    1.00000000000000E+0

LoadCaseCombination     531   "SLE_255"
   1    1    1.00000000000000E+0
   2    1    1.00000000000000E+0
   3    1    1.00000000000000E+0
   6    1    7.00000000000000E-1
   9    1    6.00000000000000E-1
   10    1    8.00000000000000E-1
   11    1    1.00000000000000E+0

LoadCaseCombination     532   "SLE_256"
   1    1    1.00000000000000E+0
   2    1    1.00000000000000E+0
   4    1    1.00000000000000E+0
   6    1    7.00000000000000E-1
   9    1    6.00000000000000E-1
   10    1    8.00000000000000E-1
   11    1    1.00000000000000E+0

LoadCaseCombination     533   "SLE_257"
   1    1    1.00000000000000E+0
   2    1    1.00000000000000E+0
   3    1    1.00000000000000E+0
   6    1    7.00000000000000E-1
   7    1    6.00000000000000E-1
   10    1    8.00000000000000E-1
   12    1    1.00000000000000E+0

LoadCaseCombination     534   "SLE_258"
   1    1    1.00000000000000E+0
   2    1    1.00000000000000E+0
   4    1    1.00000000000000E+0
   6    1    7.00000000000000E-1
   7    1    6.00000000000000E-1
   10    1    8.00000000000000E-1
   12    1    1.00000000000000E+0

LoadCaseCombination     535   "SLE_259"
   1    1    1.00000000000000E+0
   2    1    1.00000000000000E+0
   3    1    1.00000000000000E+0
   6    1    7.00000000000000E-1
   9    1    6.00000000000000E-1
   10    1    8.00000000000000E-1
   12    1    1.00000000000000E+0

LoadCaseCombination     536   "SLE_260"
   1    1    1.00000000000000E+0
   2    1    1.00000000000000E+0
   4    1    1.00000000000000E+0
```

```
   6    1    7.00000000000000E-1
   9    1    6.00000000000000E-1
   10    1    8.00000000000000E-1
   12    1    1.00000000000000E+0

LoadCaseCombination     537   "FASE 1 (G1)-SLE"
   1    1    1.00000000000000E+0
   2    1    1.00000000000000E+0

LoadCaseCombination     538   "FASE 2 (G2)-SLE"
   3    1    1.00000000000000E+0

LoadCaseCombination     539   "FASE 3 (Qk)-SLE_39"
   6    1    1.00000000000000E+0
   12    1    6.00000000000000E-1

LoadCaseCombination     540   "FASE 1 (G1)-SLU"
   1    1    1.35000000000000E+0
   2    1    1.35000000000000E+0

LoadCaseCombination     541   "FASE 2 (G2)-SLU"
   3    1    1.50000000000000E+0

LoadCaseCombination     542   "FASE 3 (Qk)-SLU_39"
   6    1    1.50000000000000E+0
   12    1    9.00000000000000E-1


/ ____________________________________________________________________________
/ RESULT CASE ENVELOPES

   LoadCaseEnvelope     "SLU min"  Min
   ON                      13       1
   ON                      14       1
   ON                      15       1
   ON                      16       1
   ON                      17       1
   ON                      18       1
   ON                      19       1
   ON                      20       1
   ON                      21       1
   ON                      22       1
   ON                      23       1
   ON                      24       1
   ON                      25       1
   ON                      26       1
   ON                      27       1
   ON                      28       1
   ON                      29       1
   ON                      30       1
   ON                      31       1
   ON                      32       1
   ON                      33       1
   ON                      34       1
```

ON	35	1
ON	36	1
ON	37	1
ON	38	1
ON	39	1
ON	40	1
ON	41	1
ON	42	1
ON	43	1
ON	44	1
ON	45	1
ON	46	1
ON	47	1
ON	48	1
ON	49	1
ON	50	1
ON	51	1
ON	52	1
ON	53	1
ON	54	1
ON	55	1
ON	56	1
ON	57	1
ON	58	1
ON	59	1
ON	60	1
ON	61	1
ON	62	1
ON	63	1
ON	64	1
ON	65	1
ON	66	1
ON	67	1
ON	68	1
ON	69	1
ON	70	1
ON	71	1
ON	72	1
ON	73	1
ON	74	1
ON	75	1
ON	76	1
ON	77	1
ON	78	1
ON	79	1
ON	80	1
ON	81	1
ON	82	1
ON	83	1
ON	84	1
ON	85	1
ON	86	1
ON	87	1
ON	88	1

ON	89	1
ON	90	1
ON	91	1
ON	92	1
ON	93	1
ON	94	1
ON	95	1
ON	96	1
ON	97	1
ON	98	1
ON	99	1
ON	100	1
ON	101	1
ON	102	1
ON	103	1
ON	104	1
ON	105	1
ON	106	1
ON	107	1
ON	108	1
ON	109	1
ON	110	1
ON	111	1
ON	112	1
ON	113	1
ON	114	1
ON	115	1
ON	116	1
ON	117	1
ON	118	1
ON	119	1
ON	120	1
ON	121	1
ON	122	1
ON	123	1
ON	124	1
ON	125	1
ON	126	1
ON	127	1
ON	128	1
ON	129	1
ON	130	1
ON	131	1
ON	132	1
ON	133	1
ON	134	1
ON	135	1
ON	136	1
ON	137	1
ON	138	1
ON	139	1
ON	140	1
ON	141	1
ON	142	1

ON	143	1
ON	144	1
ON	145	1
ON	146	1
ON	147	1
ON	148	1
ON	149	1
ON	150	1
ON	151	1
ON	152	1
ON	153	1
ON	154	1
ON	155	1
ON	156	1
ON	157	1
ON	158	1
ON	159	1
ON	160	1
ON	161	1
ON	162	1
ON	163	1
ON	164	1
ON	165	1
ON	166	1
ON	167	1
ON	168	1
ON	169	1
ON	170	1
ON	171	1
ON	172	1
ON	173	1
ON	174	1
ON	175	1
ON	176	1
ON	177	1
ON	178	1
ON	179	1
ON	180	1
ON	181	1
ON	182	1
ON	183	1
ON	184	1
ON	185	1
ON	186	1
ON	187	1
ON	188	1
ON	189	1
ON	190	1
ON	191	1
ON	192	1
ON	193	1
ON	194	1
ON	195	1
ON	196	1

ON	197	1
ON	198	1
ON	199	1
ON	200	1
ON	201	1
ON	202	1
ON	203	1
ON	204	1
ON	205	1
ON	206	1
ON	207	1
ON	208	1
ON	209	1
ON	210	1
ON	211	1
ON	212	1
ON	213	1
ON	214	1
ON	215	1
ON	216	1
ON	217	1
ON	218	1
ON	219	1
ON	220	1
ON	221	1
ON	222	1
ON	223	1
ON	224	1
ON	225	1
ON	226	1
ON	227	1
ON	228	1
ON	229	1
ON	230	1
ON	231	1
ON	232	1
ON	233	1
ON	234	1
ON	235	1
ON	236	1
ON	237	1
ON	238	1
ON	239	1
ON	240	1
ON	241	1
ON	242	1
ON	243	1
ON	244	1
ON	245	1
ON	246	1
ON	247	1
ON	248	1
ON	249	1
ON	250	1

ON	251	1
ON	252	1
ON	253	1
ON	254	1
ON	255	1
ON	256	1
ON	257	1
ON	258	1
ON	259	1
ON	260	1
ON	261	1
ON	262	1
ON	263	1
ON	264	1
ON	265	1
ON	266	1
ON	267	1
ON	268	1
ON	269	1
ON	270	1
ON	271	1
ON	272	1
ON	273	1
ON	274	1

LoadCaseEnvelope	"SLU max"	Max
ON	13	1
ON	14	1
ON	15	1
ON	16	1
ON	17	1
ON	18	1
ON	19	1
ON	20	1
ON	21	1
ON	22	1
ON	23	1
ON	24	1
ON	25	1
ON	26	1
ON	27	1
ON	28	1
ON	29	1
ON	30	1
ON	31	1
ON	32	1
ON	33	1
ON	34	1
ON	35	1
ON	36	1
ON	37	1
ON	38	1
ON	39	1
ON	40	1

ON	41	1
ON	42	1
ON	43	1
ON	44	1
ON	45	1
ON	46	1
ON	47	1
ON	48	1
ON	49	1
ON	50	1
ON	51	1
ON	52	1
ON	53	1
ON	54	1
ON	55	1
ON	56	1
ON	57	1
ON	58	1
ON	59	1
ON	60	1
ON	61	1
ON	62	1
ON	63	1
ON	64	1
ON	65	1
ON	66	1
ON	67	1
ON	68	1
ON	69	1
ON	70	1
ON	71	1
ON	72	1
ON	73	1
ON	74	1
ON	75	1
ON	76	1
ON	77	1
ON	78	1
ON	79	1
ON	80	1
ON	81	1
ON	82	1
ON	83	1
ON	84	1
ON	85	1
ON	86	1
ON	87	1
ON	88	1
ON	89	1
ON	90	1
ON	91	1
ON	92	1
ON	93	1
ON	94	1

ON	95	1
ON	96	1
ON	97	1
ON	98	1
ON	99	1
ON	100	1
ON	101	1
ON	102	1
ON	103	1
ON	104	1
ON	105	1
ON	106	1
ON	107	1
ON	108	1
ON	109	1
ON	110	1
ON	111	1
ON	112	1
ON	113	1
ON	114	1
ON	115	1
ON	116	1
ON	117	1
ON	118	1
ON	119	1
ON	120	1
ON	121	1
ON	122	1
ON	123	1
ON	124	1
ON	125	1
ON	126	1
ON	127	1
ON	128	1
ON	129	1
ON	130	1
ON	131	1
ON	132	1
ON	133	1
ON	134	1
ON	135	1
ON	136	1
ON	137	1
ON	138	1
ON	139	1
ON	140	1
ON	141	1
ON	142	1
ON	143	1
ON	144	1
ON	145	1
ON	146	1
ON	147	1
ON	148	1

ON	149	1
ON	150	1
ON	151	1
ON	152	1
ON	153	1
ON	154	1
ON	155	1
ON	156	1
ON	157	1
ON	158	1
ON	159	1
ON	160	1
ON	161	1
ON	162	1
ON	163	1
ON	164	1
ON	165	1
ON	166	1
ON	167	1
ON	168	1
ON	169	1
ON	170	1
ON	171	1
ON	172	1
ON	173	1
ON	174	1
ON	175	1
ON	176	1
ON	177	1
ON	178	1
ON	179	1
ON	180	1
ON	181	1
ON	182	1
ON	183	1
ON	184	1
ON	185	1
ON	186	1
ON	187	1
ON	188	1
ON	189	1
ON	190	1
ON	191	1
ON	192	1
ON	193	1
ON	194	1
ON	195	1
ON	196	1
ON	197	1
ON	198	1
ON	199	1
ON	200	1
ON	201	1
ON	202	1

ON	203	1
ON	204	1
ON	205	1
ON	206	1
ON	207	1
ON	208	1
ON	209	1
ON	210	1
ON	211	1
ON	212	1
ON	213	1
ON	214	1
ON	215	1
ON	216	1
ON	217	1
ON	218	1
ON	219	1
ON	220	1
ON	221	1
ON	222	1
ON	223	1
ON	224	1
ON	225	1
ON	226	1
ON	227	1
ON	228	1
ON	229	1
ON	230	1
ON	231	1
ON	232	1
ON	233	1
ON	234	1
ON	235	1
ON	236	1
ON	237	1
ON	238	1
ON	239	1
ON	240	1
ON	241	1
ON	242	1
ON	243	1
ON	244	1
ON	245	1
ON	246	1
ON	247	1
ON	248	1
ON	249	1
ON	250	1
ON	251	1
ON	252	1
ON	253	1
ON	254	1
ON	255	1
ON	256	1

ON	257	1
ON	258	1
ON	259	1
ON	260	1
ON	261	1
ON	262	1
ON	263	1
ON	264	1
ON	265	1
ON	266	1
ON	267	1
ON	268	1
ON	269	1
ON	270	1
ON	271	1
ON	272	1
ON	273	1
ON	274	1

LoadCaseEnvelope	"SLE min"	Min
ON	299	1
ON	300	1
ON	301	1
ON	302	1
ON	303	1
ON	304	1
ON	305	1
ON	306	1
ON	307	1
ON	308	1
ON	309	1
ON	310	1
ON	311	1
ON	312	1
ON	313	1
ON	314	1
ON	315	1
ON	316	1
ON	317	1
ON	318	1
ON	319	1
ON	320	1
ON	321	1
ON	322	1
ON	323	1
ON	324	1
ON	325	1
ON	326	1
ON	327	1
ON	328	1
ON	329	1
ON	330	1
ON	331	1
ON	332	1

ON	333	1
ON	334	1
ON	335	1
ON	336	1
ON	337	1
ON	338	1
ON	339	1
ON	340	1
ON	341	1
ON	342	1
ON	343	1
ON	344	1
ON	345	1
ON	346	1
ON	347	1
ON	348	1
ON	349	1
ON	350	1
ON	351	1
ON	352	1
ON	353	1
ON	354	1
ON	355	1
ON	356	1
ON	357	1
ON	358	1
ON	359	1
ON	360	1
ON	361	1
ON	362	1
ON	363	1
ON	364	1
ON	365	1
ON	366	1
ON	367	1
ON	368	1
ON	369	1
ON	370	1
ON	371	1
ON	372	1
ON	373	1
ON	374	1
ON	375	1
ON	376	1
ON	377	1
ON	378	1
ON	379	1
ON	380	1
ON	381	1
ON	382	1
ON	383	1
ON	384	1
ON	385	1
ON	386	1

ON	387	1
ON	388	1
ON	389	1
ON	390	1
ON	391	1
ON	392	1
ON	393	1
ON	394	1
ON	395	1
ON	396	1
ON	397	1
ON	398	1
ON	399	1
ON	400	1
ON	401	1
ON	402	1
ON	403	1
ON	404	1
ON	405	1
ON	406	1
ON	407	1
ON	408	1
ON	409	1
ON	410	1
ON	411	1
ON	412	1
ON	413	1
ON	414	1
ON	415	1
ON	416	1
ON	417	1
ON	418	1
ON	419	1
ON	420	1
ON	421	1
ON	422	1
ON	423	1
ON	424	1
ON	425	1
ON	426	1
ON	427	1
ON	428	1
ON	429	1
ON	430	1
ON	431	1
ON	432	1
ON	433	1
ON	434	1
ON	435	1
ON	436	1
ON	437	1
ON	438	1
ON	439	1
ON	440	1

ON	441	1
ON	442	1
ON	443	1
ON	444	1
ON	445	1
ON	446	1
ON	447	1
ON	448	1
ON	449	1
ON	450	1
ON	451	1
ON	452	1
ON	453	1
ON	454	1
ON	455	1
ON	456	1
ON	457	1
ON	458	1
ON	459	1
ON	460	1
ON	461	1
ON	462	1
ON	463	1
ON	464	1
ON	465	1
ON	466	1
ON	467	1
ON	468	1
ON	469	1
ON	470	1
ON	471	1
ON	472	1
ON	473	1
ON	474	1
ON	475	1
ON	476	1
ON	477	1
ON	478	1
ON	479	1
ON	480	1
ON	481	1
ON	482	1
ON	483	1
ON	484	1
ON	485	1
ON	486	1
ON	487	1
ON	488	1
ON	489	1
ON	490	1
ON	491	1
ON	492	1
ON	493	1
ON	494	1

ON	495	1
ON	496	1
ON	497	1
ON	498	1
ON	499	1
ON	500	1
ON	501	1
ON	502	1
ON	503	1
ON	504	1
ON	505	1
ON	506	1
ON	507	1
ON	508	1
ON	509	1
ON	510	1
ON	511	1
ON	512	1
ON	513	1
ON	514	1
ON	515	1
ON	516	1
ON	517	1
ON	518	1
ON	519	1
ON	520	1
ON	521	1
ON	522	1
ON	523	1
ON	524	1
ON	525	1
ON	526	1
ON	527	1
ON	528	1
ON	529	1
ON	530	1
ON	531	1
ON	532	1
ON	533	1
ON	534	1
ON	535	1
ON	536	1
ON	537	1
ON	538	1
ON	539	1
ON	540	1
ON	541	1
ON	542	1

LoadCaseEnvelope	"SLE max"	Max
ON	299	1
ON	300	1
ON	301	1
ON	302	1

ON	303	1
ON	304	1
ON	305	1
ON	306	1
ON	307	1
ON	308	1
ON	309	1
ON	310	1
ON	311	1
ON	312	1
ON	313	1
ON	314	1
ON	315	1
ON	316	1
ON	317	1
ON	318	1
ON	319	1
ON	320	1
ON	321	1
ON	322	1
ON	323	1
ON	324	1
ON	325	1
ON	326	1
ON	327	1
ON	328	1
ON	329	1
ON	330	1
ON	331	1
ON	332	1
ON	333	1
ON	334	1
ON	335	1
ON	336	1
ON	337	1
ON	338	1
ON	339	1
ON	340	1
ON	341	1
ON	342	1
ON	343	1
ON	344	1
ON	345	1
ON	346	1
ON	347	1
ON	348	1
ON	349	1
ON	350	1
ON	351	1
ON	352	1
ON	353	1
ON	354	1
ON	355	1
ON	356	1

ON	357	1
ON	358	1
ON	359	1
ON	360	1
ON	361	1
ON	362	1
ON	363	1
ON	364	1
ON	365	1
ON	366	1
ON	367	1
ON	368	1
ON	369	1
ON	370	1
ON	371	1
ON	372	1
ON	373	1
ON	374	1
ON	375	1
ON	376	1
ON	377	1
ON	378	1
ON	379	1
ON	380	1
ON	381	1
ON	382	1
ON	383	1
ON	384	1
ON	385	1
ON	386	1
ON	387	1
ON	388	1
ON	389	1
ON	390	1
ON	391	1
ON	392	1
ON	393	1
ON	394	1
ON	395	1
ON	396	1
ON	397	1
ON	398	1
ON	399	1
ON	400	1
ON	401	1
ON	402	1
ON	403	1
ON	404	1
ON	405	1
ON	406	1
ON	407	1
ON	408	1
ON	409	1
ON	410	1

ON	411	1
ON	412	1
ON	413	1
ON	414	1
ON	415	1
ON	416	1
ON	417	1
ON	418	1
ON	419	1
ON	420	1
ON	421	1
ON	422	1
ON	423	1
ON	424	1
ON	425	1
ON	426	1
ON	427	1
ON	428	1
ON	429	1
ON	430	1
ON	431	1
ON	432	1
ON	433	1
ON	434	1
ON	435	1
ON	436	1
ON	437	1
ON	438	1
ON	439	1
ON	440	1
ON	441	1
ON	442	1
ON	443	1
ON	444	1
ON	445	1
ON	446	1
ON	447	1
ON	448	1
ON	449	1
ON	450	1
ON	451	1
ON	452	1
ON	453	1
ON	454	1
ON	455	1
ON	456	1
ON	457	1
ON	458	1
ON	459	1
ON	460	1
ON	461	1
ON	462	1
ON	463	1
ON	464	1

ON	465	1
ON	466	1
ON	467	1
ON	468	1
ON	469	1
ON	470	1
ON	471	1
ON	472	1
ON	473	1
ON	474	1
ON	475	1
ON	476	1
ON	477	1
ON	478	1
ON	479	1
ON	480	1
ON	481	1
ON	482	1
ON	483	1
ON	484	1
ON	485	1
ON	486	1
ON	487	1
ON	488	1
ON	489	1
ON	490	1
ON	491	1
ON	492	1
ON	493	1
ON	494	1
ON	495	1
ON	496	1
ON	497	1
ON	498	1
ON	499	1
ON	500	1
ON	501	1
ON	502	1
ON	503	1
ON	504	1
ON	505	1
ON	506	1
ON	507	1
ON	508	1
ON	509	1
ON	510	1
ON	511	1
ON	512	1
ON	513	1
ON	514	1
ON	515	1
ON	516	1
ON	517	1
ON	518	1

```
   ON                      519       1
   ON                      520       1
   ON                      521       1
   ON                      522       1
   ON                      523       1
   ON                      524       1
   ON                      525       1
   ON                      526       1
   ON                      527       1
   ON                      528       1
   ON                      529       1
   ON                      530       1
   ON                      531       1
   ON                      532       1
   ON                      533       1
   ON                      534       1
   ON                      535       1
   ON                      536       1
   ON                      537       1
   ON                      538       1
   ON                      539       1
   ON                      540       1
   ON                      541       1
   ON                      542       1


/ ____________________________________________________________________________
/ INCREMENT ENVELOPES

   IncrementEnvelope    "MIN_SLU"  Min
   ON                        1
   ON                        2
   ON                        3
   ON                        4
   ON                        5
   ON                        6
   ON                        7
   ON                        8
   ON                        9
   ON                       10
   ON                       11
   ON                       12
   ON                       13
   ON                       14
   ON                       15
   ON                       16
   ON                       17
   ON                       18
   ON                       19
   ON                       20
   ON                       21
   ON                       22
   ON                       23
   ON                       24
```

ON	25
ON	26
ON	27
ON	28
ON	29
ON	30
ON	31
ON	32
ON	33
ON	34
ON	35
ON	36
ON	37
ON	38
ON	39
ON	40
ON	41
ON	42
ON	43
ON	44
ON	45
ON	46
ON	47
ON	48
ON	49
ON	50
ON	51
ON	52
ON	53
ON	54
ON	55
ON	56
ON	57
ON	58
ON	59
ON	60
ON	61
ON	62
ON	63
ON	64
ON	65
ON	66
ON	67
ON	68
ON	69
ON	70
ON	71
ON	72
ON	73
ON	74
ON	75
ON	76
ON	77
ON	78

ON	79
ON	80
ON	81
ON	82
ON	83
ON	84
ON	85
ON	86
ON	87
ON	88
ON	89
ON	90
ON	91
ON	92
ON	93
ON	94
ON	95
ON	96
ON	97
ON	98
ON	99
ON	100
ON	101
ON	102
ON	103
ON	104
ON	105
ON	106
ON	107
ON	108
ON	109
ON	110
ON	111
ON	112
ON	113
ON	114
ON	115
ON	116
ON	117
ON	118
ON	119
ON	120
ON	121
ON	122
ON	123
ON	124
ON	125
ON	126
ON	127
ON	128
ON	129
ON	130
ON	131
ON	132

ON	133
ON	134
ON	135
ON	136
ON	137
ON	138
ON	139
ON	140
ON	141
ON	142
ON	143
ON	144
ON	145
ON	146
ON	147
ON	148
ON	149
ON	150
ON	151
ON	152
ON	153
ON	154
ON	155
ON	156
ON	157
ON	158
ON	159
ON	160
ON	161
ON	162
ON	163
ON	164
ON	165
ON	166
ON	167
ON	168
ON	169
ON	170
ON	171
ON	172
ON	173
ON	174
ON	175
ON	176
ON	177
ON	178
ON	179
ON	180
ON	181
ON	182
ON	183
ON	184
ON	185
ON	186

ON	187
ON	188
ON	189
ON	190
ON	191
ON	192
ON	193
ON	194
ON	195
ON	196
ON	197
ON	198
ON	199
ON	200
ON	201
ON	202
ON	203
ON	204
ON	205
ON	206
ON	207
ON	208
ON	209
ON	210
ON	211
ON	212
ON	213
ON	214
ON	215
ON	216
ON	217
ON	218
ON	219
ON	220
ON	221
ON	222
ON	223
ON	224
ON	225
ON	226
ON	227
ON	228
ON	229
ON	230
ON	231
ON	232
ON	233
ON	234
ON	235
ON	236
ON	237
ON	238
ON	239
ON	240

ON	241
ON	242
ON	243
ON	244
ON	245
ON	246
ON	247
ON	248
ON	249
ON	250
ON	251
ON	252
ON	253
ON	254
ON	255
ON	256
ON	257
ON	258
ON	259
ON	260
ON	261
ON	262

IncrementEnvelope	"Max_SLU" Max
ON	1
ON	2
ON	3
ON	4
ON	5
ON	6
ON	7
ON	8
ON	9
ON	10
ON	11
ON	12
ON	13
ON	14
ON	15
ON	16
ON	17
ON	18
ON	19
ON	20
ON	21
ON	22
ON	23
ON	24
ON	25
ON	26
ON	27
ON	28
ON	29
ON	30

ON	31
ON	32
ON	33
ON	34
ON	35
ON	36
ON	37
ON	38
ON	39
ON	40
ON	41
ON	42
ON	43
ON	44
ON	45
ON	46
ON	47
ON	48
ON	49
ON	50
ON	51
ON	52
ON	53
ON	54
ON	55
ON	56
ON	57
ON	58
ON	59
ON	60
ON	61
ON	62
ON	63
ON	64
ON	65
ON	66
ON	67
ON	68
ON	69
ON	70
ON	71
ON	72
ON	73
ON	74
ON	75
ON	76
ON	77
ON	78
ON	79
ON	80
ON	81
ON	82
ON	83
ON	84

ON	85
ON	86
ON	87
ON	88
ON	89
ON	90
ON	91
ON	92
ON	93
ON	94
ON	95
ON	96
ON	97
ON	98
ON	99
ON	100
ON	101
ON	102
ON	103
ON	104
ON	105
ON	106
ON	107
ON	108
ON	109
ON	110
ON	111
ON	112
ON	113
ON	114
ON	115
ON	116
ON	117
ON	118
ON	119
ON	120
ON	121
ON	122
ON	123
ON	124
ON	125
ON	126
ON	127
ON	128
ON	129
ON	130
ON	131
ON	132
ON	133
ON	134
ON	135
ON	136
ON	137
ON	138

ON	139
ON	140
ON	141
ON	142
ON	143
ON	144
ON	145
ON	146
ON	147
ON	148
ON	149
ON	150
ON	151
ON	152
ON	153
ON	154
ON	155
ON	156
ON	157
ON	158
ON	159
ON	160
ON	161
ON	162
ON	163
ON	164
ON	165
ON	166
ON	167
ON	168
ON	169
ON	170
ON	171
ON	172
ON	173
ON	174
ON	175
ON	176
ON	177
ON	178
ON	179
ON	180
ON	181
ON	182
ON	183
ON	184
ON	185
ON	186
ON	187
ON	188
ON	189
ON	190
ON	191
ON	192

ON	193
ON	194
ON	195
ON	196
ON	197
ON	198
ON	199
ON	200
ON	201
ON	202
ON	203
ON	204
ON	205
ON	206
ON	207
ON	208
ON	209
ON	210
ON	211
ON	212
ON	213
ON	214
ON	215
ON	216
ON	217
ON	218
ON	219
ON	220
ON	221
ON	222
ON	223
ON	224
ON	225
ON	226
ON	227
ON	228
ON	229
ON	230
ON	231
ON	232
ON	233
ON	234
ON	235
ON	236
ON	237
ON	238
ON	239
ON	240
ON	241
ON	242
ON	243
ON	244
ON	245
ON	246

```
ON                      247
ON                      248
ON                      249
ON                      250
ON                      251
ON                      252
ON                      253
ON                      254
ON                      255
ON                      256
ON                      257
ON                      258
ON                      259
ON                      260
ON                      261
ON                      262

IncrementEnvelope    "Min_SLV"  Min
ON                      263
ON                      264
ON                      265
ON                      266
ON                      267
ON                      268
ON                      269
ON                      270
ON                      271
ON                      272
ON                      273
ON                      274
ON                      275
ON                      276
ON                      277
ON                      278
ON                      279
ON                      280
ON                      281
ON                      282
ON                      283
ON                      284
ON                      285
ON                      286

IncrementEnvelope    "Max_SLV"  Max
ON                      263
ON                      264
ON                      265
ON                      266
ON                      267
ON                      268
ON                      269
ON                      270
ON                      271
ON                      272
```

```
ON                      273
ON                      274
ON                      275
ON                      276
ON                      277
ON                      278
ON                      279
ON                      280
ON                      281
ON                      282
ON                      283
ON                      284
ON                      285
ON                      286

IncrementEnvelope    "Min_SLE"  Min
ON                      263
ON                      264
ON                      265
ON                      266
ON                      267
ON                      268
ON                      269
ON                      270
ON                      271
ON                      272
ON                      273
ON                      274
ON                      275
ON                      276
ON                      277
ON                      278
ON                      279
ON                      280
ON                      281
ON                      282
ON                      283
ON                      284
ON                      285
ON                      286
ON                      287
ON                      288
ON                      289
ON                      290
ON                      291
ON                      292
ON                      293
ON                      294
ON                      295
ON                      296
ON                      297
ON                      298
ON                      299
ON                      300
```

ON	301
ON	302
ON	303
ON	304
ON	305
ON	306
ON	307
ON	308
ON	309
ON	310
ON	311
ON	312
ON	313
ON	314
ON	315
ON	316
ON	317
ON	318
ON	319
ON	320
ON	321
ON	322
ON	323
ON	324
ON	325
ON	326
ON	327
ON	328
ON	329
ON	330
ON	331
ON	332
ON	333
ON	334
ON	335
ON	336
ON	337
ON	338
ON	339
ON	340
ON	341
ON	342
ON	343
ON	344
ON	345
ON	346
ON	347
ON	348
ON	349
ON	350
ON	351
ON	352
ON	353
ON	354

ON	355
ON	356
ON	357
ON	358
ON	359
ON	360
ON	361
ON	362
ON	363
ON	364
ON	365
ON	366
ON	367
ON	368
ON	369
ON	370
ON	371
ON	372
ON	373
ON	374
ON	375
ON	376
ON	377
ON	378
ON	379
ON	380
ON	381
ON	382
ON	383
ON	384
ON	385
ON	386
ON	387
ON	388
ON	389
ON	390
ON	391
ON	392
ON	393
ON	394
ON	395
ON	396
ON	397
ON	398
ON	399
ON	400
ON	401
ON	402
ON	403
ON	404
ON	405
ON	406
ON	407
ON	408

ON	409
ON	410
ON	411
ON	412
ON	413
ON	414
ON	415
ON	416
ON	417
ON	418
ON	419
ON	420
ON	421
ON	422
ON	423
ON	424
ON	425
ON	426
ON	427
ON	428
ON	429
ON	430
ON	431
ON	432
ON	433
ON	434
ON	435
ON	436
ON	437
ON	438
ON	439
ON	440
ON	441
ON	442
ON	443
ON	444
ON	445
ON	446
ON	447
ON	448
ON	449
ON	450
ON	451
ON	452
ON	453
ON	454
ON	455
ON	456
ON	457
ON	458
ON	459
ON	460
ON	461
ON	462

ON	463
ON	464
ON	465
ON	466
ON	467
ON	468
ON	469
ON	470
ON	471
ON	472
ON	473
ON	474
ON	475
ON	476
ON	477
ON	478
ON	479
ON	480
ON	481
ON	482
ON	483
ON	484
ON	485
ON	486
ON	487
ON	488
ON	489
ON	490
ON	491
ON	492
ON	493
ON	494
ON	495
ON	496
ON	497
ON	498
ON	499
ON	500
ON	501
ON	502
ON	503
ON	504
ON	505
ON	506
ON	507
ON	508
ON	509
ON	510
ON	511
ON	512
ON	513
ON	514
ON	515
ON	516

ON	517
ON	518
ON	519
ON	520
ON	521
ON	522
ON	523
ON	524
ON	525
ON	526
ON	527
ON	528
ON	529
ON	530
ON	531
ON	532
ON	533
ON	534
ON	535
ON	536
ON	537
ON	538
ON	539
ON	540
ON	541
ON	542
ON	543
ON	544
ON	545
ON	546
ON	547
ON	548

IncrementEnvelope	"Max_SLE" Max
ON	263
ON	264
ON	265
ON	266
ON	267
ON	268
ON	269
ON	270
ON	271
ON	272
ON	273
ON	274
ON	275
ON	276
ON	277
ON	278
ON	279
ON	280
ON	281
ON	282

ON	283
ON	284
ON	285
ON	286
ON	287
ON	288
ON	289
ON	290
ON	291
ON	292
ON	293
ON	294
ON	295
ON	296
ON	297
ON	298
ON	299
ON	300
ON	301
ON	302
ON	303
ON	304
ON	305
ON	306
ON	307
ON	308
ON	309
ON	310
ON	311
ON	312
ON	313
ON	314
ON	315
ON	316
ON	317
ON	318
ON	319
ON	320
ON	321
ON	322
ON	323
ON	324
ON	325
ON	326
ON	327
ON	328
ON	329
ON	330
ON	331
ON	332
ON	333
ON	334
ON	335
ON	336

ON	337
ON	338
ON	339
ON	340
ON	341
ON	342
ON	343
ON	344
ON	345
ON	346
ON	347
ON	348
ON	349
ON	350
ON	351
ON	352
ON	353
ON	354
ON	355
ON	356
ON	357
ON	358
ON	359
ON	360
ON	361
ON	362
ON	363
ON	364
ON	365
ON	366
ON	367
ON	368
ON	369
ON	370
ON	371
ON	372
ON	373
ON	374
ON	375
ON	376
ON	377
ON	378
ON	379
ON	380
ON	381
ON	382
ON	383
ON	384
ON	385
ON	386
ON	387
ON	388
ON	389
ON	390

ON	391
ON	392
ON	393
ON	394
ON	395
ON	396
ON	397
ON	398
ON	399
ON	400
ON	401
ON	402
ON	403
ON	404
ON	405
ON	406
ON	407
ON	408
ON	409
ON	410
ON	411
ON	412
ON	413
ON	414
ON	415
ON	416
ON	417
ON	418
ON	419
ON	420
ON	421
ON	422
ON	423
ON	424
ON	425
ON	426
ON	427
ON	428
ON	429
ON	430
ON	431
ON	432
ON	433
ON	434
ON	435
ON	436
ON	437
ON	438
ON	439
ON	440
ON	441
ON	442
ON	443
ON	444

ON	445
ON	446
ON	447
ON	448
ON	449
ON	450
ON	451
ON	452
ON	453
ON	454
ON	455
ON	456
ON	457
ON	458
ON	459
ON	460
ON	461
ON	462
ON	463
ON	464
ON	465
ON	466
ON	467
ON	468
ON	469
ON	470
ON	471
ON	472
ON	473
ON	474
ON	475
ON	476
ON	477
ON	478
ON	479
ON	480
ON	481
ON	482
ON	483
ON	484
ON	485
ON	486
ON	487
ON	488
ON	489
ON	490
ON	491
ON	492
ON	493
ON	494
ON	495
ON	496
ON	497
ON	498

```
ON                      499
ON                      500
ON                      501
ON                      502
ON                      503
ON                      504
ON                      505
ON                      506
ON                      507
ON                      508
ON                      509
ON                      510
ON                      511
ON                      512
ON                      513
ON                      514
ON                      515
ON                      516
ON                      517
ON                      518
ON                      519
ON                      520
ON                      521
ON                      522
ON                      523
ON                      524
ON                      525
ON                      526
ON                      527
ON                      528
ON                      529
ON                      530
ON                      531
ON                      532
ON                      533
ON                      534
ON                      535
ON                      536
ON                      537
ON                      538
ON                      539
ON                      540
ON                      541
ON                      542
ON                      543
ON                      544
ON                      545
ON                      546
ON                      547
ON                      548

IncrementEnvelope    "Abs_SLU"  Abs
ON                        1
ON                        2
```

ON	3
ON	4
ON	5
ON	6
ON	7
ON	8
ON	9
ON	10
ON	11
ON	12
ON	13
ON	14
ON	15
ON	16
ON	17
ON	18
ON	19
ON	20
ON	21
ON	22
ON	23
ON	24
ON	25
ON	26
ON	27
ON	28
ON	29
ON	30
ON	31
ON	32
ON	33
ON	34
ON	35
ON	36
ON	37
ON	38
ON	39
ON	40
ON	41
ON	42
ON	43
ON	44
ON	45
ON	46
ON	47
ON	48
ON	49
ON	50
ON	51
ON	52
ON	53
ON	54
ON	55
ON	56

ON	57
ON	58
ON	59
ON	60
ON	61
ON	62
ON	63
ON	64
ON	65
ON	66
ON	67
ON	68
ON	69
ON	70
ON	71
ON	72
ON	73
ON	74
ON	75
ON	76
ON	77
ON	78
ON	79
ON	80
ON	81
ON	82
ON	83
ON	84
ON	85
ON	86
ON	87
ON	88
ON	89
ON	90
ON	91
ON	92
ON	93
ON	94
ON	95
ON	96
ON	97
ON	98
ON	99
ON	100
ON	101
ON	102
ON	103
ON	104
ON	105
ON	106
ON	107
ON	108
ON	109
ON	110

ON	111
ON	112
ON	113
ON	114
ON	115
ON	116
ON	117
ON	118
ON	119
ON	120
ON	121
ON	122
ON	123
ON	124
ON	125
ON	126
ON	127
ON	128
ON	129
ON	130
ON	131
ON	132
ON	133
ON	134
ON	135
ON	136
ON	137
ON	138
ON	139
ON	140
ON	141
ON	142
ON	143
ON	144
ON	145
ON	146
ON	147
ON	148
ON	149
ON	150
ON	151
ON	152
ON	153
ON	154
ON	155
ON	156
ON	157
ON	158
ON	159
ON	160
ON	161
ON	162
ON	163
ON	164

ON	165
ON	166
ON	167
ON	168
ON	169
ON	170
ON	171
ON	172
ON	173
ON	174
ON	175
ON	176
ON	177
ON	178
ON	179
ON	180
ON	181
ON	182
ON	183
ON	184
ON	185
ON	186
ON	187
ON	188
ON	189
ON	190
ON	191
ON	192
ON	193
ON	194
ON	195
ON	196
ON	197
ON	198
ON	199
ON	200
ON	201
ON	202
ON	203
ON	204
ON	205
ON	206
ON	207
ON	208
ON	209
ON	210
ON	211
ON	212
ON	213
ON	214
ON	215
ON	216
ON	217
ON	218

```
   ON                      219
   ON                      220
   ON                      221
   ON                      222
   ON                      223
   ON                      224
   ON                      225
   ON                      226
   ON                      227
   ON                      228
   ON                      229
   ON                      230
   ON                      231
   ON                      232
   ON                      233
   ON                      234
   ON                      235
   ON                      236
   ON                      237
   ON                      238
   ON                      239
   ON                      240
   ON                      241
   ON                      242
   ON                      243
   ON                      244
   ON                      245
   ON                      246
   ON                      247
   ON                      248
   ON                      249
   ON                      250
   ON                      251
   ON                      252
   ON                      253
   ON                      254
   ON                      255
   ON                      256
   ON                      257
   ON                      258
   ON                      259
   ON                      260
   ON                      261
   ON                      262


/ ____________________________________________________________________________
/ COORDINATE SYSTEM DEFINITIONS

   CoordSys                 1   "Global XYZ"  GlobalXYZ


/ ____________________________________________________________________________
/ NODE COORDINATES
```

```
   Node                    1       0    -5.00000000000000E-1
0.00000000000000E+0      0.00000000000000E+0
   Node                    2       0    -3.50000000000000E+0
0.00000000000000E+0      0.00000000000000E+0
   Node                    3       0    -6.50000000000000E+0
0.00000000000000E+0      0.00000000000000E+0
   Node                    4       0    -9.50000000000000E+0
0.00000000000000E+0      0.00000000000000E+0
   Node                    5       0    -1.25000000000000E+1
0.00000000000000E+0      0.00000000000000E+0
   Node                    6       0    -1.55000000000000E+1
0.00000000000000E+0      0.00000000000000E+0
   Node                    7       0    -1.85000000000000E+1
0.00000000000000E+0      0.00000000000000E+0
   Node                    8       0    -2.15000000000000E+1
0.00000000000000E+0      0.00000000000000E+0
   Node                    9       0    -2.45000000000000E+1
0.00000000000000E+0      0.00000000000000E+0
   Node                   10       0    -2.75000000000000E+1
0.00000000000000E+0      0.00000000000000E+0
   Node                   11       0    -5.00000000000000E-1
-1.40000000000000E+1      6.36000000000000E+0
   Node                   12       0    -5.00000000000000E-1
0.00000000000000E+0      6.36000000000000E+0
   Node                   13       0    -3.50000000000000E+0
-1.40000000000000E+1      6.36000000000000E+0
   Node                   14       0    -3.50000000000000E+0
0.00000000000000E+0      6.36000000000000E+0
   Node                   15       0    -6.50000000000000E+0
-1.40000000000000E+1      6.36000000000000E+0
   Node                   16       0    -6.50000000000000E+0
0.00000000000000E+0      6.36000000000000E+0
   Node                   17       0    -9.50000000000000E+0
-1.40000000000000E+1      6.36000000000000E+0
   Node                   18       0    -9.50000000000000E+0
0.00000000000000E+0      6.36000000000000E+0
   Node                   19       0    -1.25000000000000E+1
-1.40000000000000E+1      6.36000000000000E+0
   Node                   20       0    -1.25000000000000E+1
0.00000000000000E+0      6.36000000000000E+0
   Node                   21       0    -1.55000000000000E+1
-1.40000000000000E+1      6.36000000000000E+0
   Node                   22       0    -1.55000000000000E+1
0.00000000000000E+0      6.36000000000000E+0
   Node                   23       0    -1.85000000000000E+1
-1.40000000000000E+1      6.36000000000000E+0
   Node                   24       0    -1.85000000000000E+1
0.00000000000000E+0      6.36000000000000E+0
   Node                   25       0    -2.15000000000000E+1
-1.40000000000000E+1      6.36000000000000E+0
   Node                   26       0    -2.15000000000000E+1
0.00000000000000E+0      6.36000000000000E+0
   Node                   27       0    -2.45000000000000E+1
```

-1.40000000000000E+1 6.36000000000000E+0
Node 28 0 -2.45000000000000E+1
0.00000000000000E+0 6.36000000000000E+0
Node 29 0 -2.75000000000000E+1
-1.40000000000000E+1 6.36000000000000E+0
Node 30 0 -2.75000000000000E+1
0.00000000000000E+0 6.36000000000000E+0
Node 31 0 -5.00000000000000E-1
0.00000000000000E+0 7.00000000000000E-1
Node 32 0 -5.00000000000000E-1
0.00000000000000E+0 2.00000000000000E+0
Node 33 0 -5.00000000000000E-1
0.00000000000000E+0 3.00000000000000E+0
Node 34 0 -5.00000000000000E-1
0.00000000000000E+0 4.00000000000000E+0
Node 35 0 -5.00000000000000E-1
0.00000000000000E+0 5.00000000000000E+0
Node 36 0 -3.50000000000000E+0
0.00000000000000E+0 7.00000000000000E-1
Node 37 0 -3.50000000000000E+0
0.00000000000000E+0 2.00000000000000E+0
Node 38 0 -3.50000000000000E+0
0.00000000000000E+0 3.00000000000000E+0
Node 39 0 -3.50000000000000E+0
0.00000000000000E+0 4.00000000000000E+0
Node 40 0 -3.50000000000000E+0
0.00000000000000E+0 5.00000000000000E+0
Node 41 0 -6.50000000000000E+0
0.00000000000000E+0 7.00000000000000E-1
Node 42 0 -6.50000000000000E+0
0.00000000000000E+0 2.00000000000000E+0
Node 43 0 -6.50000000000000E+0
0.00000000000000E+0 3.00000000000000E+0
Node 44 0 -6.50000000000000E+0
0.00000000000000E+0 4.00000000000000E+0
Node 45 0 -6.50000000000000E+0
0.00000000000000E+0 5.00000000000000E+0
Node 46 0 -9.50000000000000E+0
0.00000000000000E+0 7.00000000000000E-1
Node 47 0 -9.50000000000000E+0
0.00000000000000E+0 2.00000000000000E+0
Node 48 0 -9.50000000000000E+0
0.00000000000000E+0 3.00000000000000E+0
Node 49 0 -9.50000000000000E+0
0.00000000000000E+0 4.00000000000000E+0
Node 50 0 -9.50000000000000E+0
0.00000000000000E+0 5.00000000000000E+0
Node 51 0 -1.25000000000000E+1
0.00000000000000E+0 7.00000000000000E-1
Node 52 0 -1.25000000000000E+1
0.00000000000000E+0 2.00000000000000E+0
Node 53 0 -1.25000000000000E+1
0.00000000000000E+0 3.00000000000000E+0
Node 54 0 -1.25000000000000E+1

```
0.00000000000000E+0      4.00000000000000E+0
   Node                    55       0    -1.25000000000000E+1
0.00000000000000E+0      5.00000000000000E+0
   Node                    56       0    -1.55000000000000E+1
0.00000000000000E+0      7.00000000000000E-1
   Node                    57       0    -1.55000000000000E+1
0.00000000000000E+0      2.00000000000000E+0
   Node                    58       0    -1.55000000000000E+1
0.00000000000000E+0      3.00000000000000E+0
   Node                    59       0    -1.55000000000000E+1
0.00000000000000E+0      4.00000000000000E+0
   Node                    60       0    -1.55000000000000E+1
0.00000000000000E+0      5.00000000000000E+0
   Node                    61       0    -1.85000000000000E+1
0.00000000000000E+0      7.00000000000000E-1
   Node                    62       0    -1.85000000000000E+1
0.00000000000000E+0      2.00000000000000E+0
   Node                    63       0    -1.85000000000000E+1
0.00000000000000E+0      3.00000000000000E+0
   Node                    64       0    -1.85000000000000E+1
0.00000000000000E+0      4.00000000000000E+0
   Node                    65       0    -1.85000000000000E+1
0.00000000000000E+0      5.00000000000000E+0
   Node                    66       0    -2.15000000000000E+1
0.00000000000000E+0      7.00000000000000E-1
   Node                    67       0    -2.15000000000000E+1
0.00000000000000E+0      2.00000000000000E+0
   Node                    68       0    -2.15000000000000E+1
0.00000000000000E+0      3.00000000000000E+0
   Node                    69       0    -2.15000000000000E+1
0.00000000000000E+0      4.00000000000000E+0
   Node                    70       0    -2.15000000000000E+1
0.00000000000000E+0      5.00000000000000E+0
   Node                    71       0    -2.45000000000000E+1
0.00000000000000E+0      7.00000000000000E-1
   Node                    72       0    -2.45000000000000E+1
0.00000000000000E+0      2.00000000000000E+0
   Node                    73       0    -2.45000000000000E+1
0.00000000000000E+0      3.00000000000000E+0
   Node                    74       0    -2.45000000000000E+1
0.00000000000000E+0      4.00000000000000E+0
   Node                    75       0    -2.45000000000000E+1
0.00000000000000E+0      5.00000000000000E+0
   Node                    76       0    -2.75000000000000E+1
0.00000000000000E+0      7.00000000000000E-1
   Node                    77       0    -2.75000000000000E+1
0.00000000000000E+0      2.00000000000000E+0
   Node                    78       0    -2.75000000000000E+1
0.00000000000000E+0      3.00000000000000E+0
   Node                    79       0    -2.75000000000000E+1
0.00000000000000E+0      4.00000000000000E+0
   Node                    80       0    -2.75000000000000E+1
0.00000000000000E+0      5.00000000000000E+0
   Node                    81       0    -2.75000000000000E+1
```

```
-1.35000000000000E+1      6.36000000000000E+0
   Node                    82       0    -2.75000000000000E+1
-1.30000000000000E+1      6.36000000000000E+0
   Node                    83       0    -2.75000000000000E+1
-1.25000000000000E+1      6.36000000000000E+0
   Node                    84       0    -2.75000000000000E+1
-1.20000000000000E+1      6.36000000000000E+0
   Node                    85       0    -2.75000000000000E+1
-1.15000000000000E+1      6.36000000000000E+0
   Node                    86       0    -2.75000000000000E+1
-1.10000000000000E+1      6.36000000000000E+0
   Node                    87       0    -2.75000000000000E+1
-1.05000000000000E+1      6.36000000000000E+0
   Node                    88       0    -2.75000000000000E+1
-1.00000000000000E+1      6.36000000000000E+0
   Node                    89       0    -2.75000000000000E+1
-9.50000000000000E+0      6.36000000000000E+0
   Node                    90       0    -2.75000000000000E+1
-9.00000000000000E+0      6.36000000000000E+0
   Node                    91       0    -2.75000000000000E+1
-8.50000000000000E+0      6.36000000000000E+0
   Node                    92       0    -2.75000000000000E+1
-8.00000000000000E+0      6.36000000000000E+0
   Node                    93       0    -2.75000000000000E+1
-7.50000000000000E+0      6.36000000000000E+0
   Node                    94       0    -2.75000000000000E+1
-7.00000000000000E+0      6.36000000000000E+0
   Node                    95       0    -2.75000000000000E+1
-6.00000000000000E+0      6.36000000000000E+0
   Node                    96       0    -2.75000000000000E+1
-5.50000000000000E+0      6.36000000000000E+0
   Node                    97       0    -2.75000000000000E+1
-5.00000000000000E+0      6.36000000000000E+0
   Node                    98       0    -2.75000000000000E+1
-4.50000000000000E+0      6.36000000000000E+0
   Node                    99       0    -2.75000000000000E+1
-4.00000000000000E+0      6.36000000000000E+0
   Node                   100       0    -2.75000000000000E+1
-3.50000000000000E+0      6.36000000000000E+0
   Node                   101       0    -2.75000000000000E+1
-3.00000000000000E+0      6.36000000000000E+0
   Node                   102       0    -2.75000000000000E+1
-2.50000000000000E+0      6.36000000000000E+0
   Node                   103       0    -2.75000000000000E+1
-2.00000000000000E+0      6.36000000000000E+0
   Node                   104       0    -2.75000000000000E+1
-1.50000000000000E+0      6.36000000000000E+0
   Node                   105       0    -2.75000000000000E+1
-1.00000000000000E+0      6.36000000000000E+0
   Node                   106       0    -2.75000000000000E+1
-5.00000000000000E-1      6.36000000000000E+0
   Node                   107       0    -5.00000000000000E-1
-1.35000000000000E+1      6.36000000000000E+0
   Node                   108       0    -5.00000000000000E-1
```

```
-1.30000000000000E+1      6.36000000000000E+0
   Node                   109       0    -5.00000000000000E-1
-1.25000000000000E+1      6.36000000000000E+0
   Node                   110       0    -5.00000000000000E-1
-1.20000000000000E+1      6.36000000000000E+0
   Node                   111       0    -5.00000000000000E-1
-1.15000000000000E+1      6.36000000000000E+0
   Node                   112       0    -5.00000000000000E-1
-1.10000000000000E+1      6.36000000000000E+0
   Node                   113       0    -5.00000000000000E-1
-1.05000000000000E+1      6.36000000000000E+0
   Node                   114       0    -5.00000000000000E-1
-1.00000000000000E+1      6.36000000000000E+0
   Node                   115       0    -5.00000000000000E-1
-9.50000000000000E+0      6.36000000000000E+0
   Node                   116       0    -5.00000000000000E-1
-9.00000000000000E+0      6.36000000000000E+0
   Node                   117       0    -5.00000000000000E-1
-8.50000000000000E+0      6.36000000000000E+0
   Node                   118       0    -5.00000000000000E-1
-8.00000000000000E+0      6.36000000000000E+0
   Node                   119       0    -5.00000000000000E-1
-7.50000000000000E+0      6.36000000000000E+0
   Node                   120       0    -5.00000000000000E-1
-7.00000000000000E+0      6.36000000000000E+0
   Node                   121       0    -5.00000000000000E-1
-6.00000000000000E+0      6.36000000000000E+0
   Node                   122       0    -5.00000000000000E-1
-5.50000000000000E+0      6.36000000000000E+0
   Node                   123       0    -5.00000000000000E-1
-5.00000000000000E+0      6.36000000000000E+0
   Node                   124       0    -5.00000000000000E-1
-4.50000000000000E+0      6.36000000000000E+0
   Node                   125       0    -5.00000000000000E-1
-4.00000000000000E+0      6.36000000000000E+0
   Node                   126       0    -5.00000000000000E-1
-3.50000000000000E+0      6.36000000000000E+0
   Node                   127       0    -5.00000000000000E-1
-3.00000000000000E+0      6.36000000000000E+0
   Node                   128       0    -5.00000000000000E-1
-2.50000000000000E+0      6.36000000000000E+0
   Node                   129       0    -5.00000000000000E-1
-2.00000000000000E+0      6.36000000000000E+0
   Node                   130       0    -5.00000000000000E-1
-1.50000000000000E+0      6.36000000000000E+0
   Node                   131       0    -5.00000000000000E-1
-1.00000000000000E+0      6.36000000000000E+0
   Node                   132       0    -5.00000000000000E-1
-5.00000000000000E-1      6.36000000000000E+0
   Node                   133       0    -3.50000000000000E+0
-1.35000000000000E+1      6.36000000000000E+0
   Node                   134       0    -3.50000000000000E+0
-1.30000000000000E+1      6.36000000000000E+0
   Node                   135       0    -3.50000000000000E+0
```

```
-1.25000000000000E+1      6.36000000000000E+0
   Node                   136       0    -3.50000000000000E+0
-1.20000000000000E+1      6.36000000000000E+0
   Node                   137       0    -3.50000000000000E+0
-1.15000000000000E+1      6.36000000000000E+0
   Node                   138       0    -3.50000000000000E+0
-1.10000000000000E+1      6.36000000000000E+0
   Node                   139       0    -3.50000000000000E+0
-1.05000000000000E+1      6.36000000000000E+0
   Node                   140       0    -3.50000000000000E+0
-1.00000000000000E+1      6.36000000000000E+0
   Node                   141       0    -3.50000000000000E+0
-9.50000000000000E+0      6.36000000000000E+0
   Node                   142       0    -3.50000000000000E+0
-9.00000000000000E+0      6.36000000000000E+0
   Node                   143       0    -3.50000000000000E+0
-8.50000000000000E+0      6.36000000000000E+0
   Node                   144       0    -3.50000000000000E+0
-8.00000000000000E+0      6.36000000000000E+0
   Node                   145       0    -3.50000000000000E+0
-7.50000000000000E+0      6.36000000000000E+0
   Node                   146       0    -3.50000000000000E+0
-7.00000000000000E+0      6.36000000000000E+0
   Node                   147       0    -3.50000000000000E+0
-6.00000000000000E+0      6.36000000000000E+0
   Node                   148       0    -3.50000000000000E+0
-5.50000000000000E+0      6.36000000000000E+0
   Node                   149       0    -3.50000000000000E+0
-5.00000000000000E+0      6.36000000000000E+0
   Node                   150       0    -3.50000000000000E+0
-4.50000000000000E+0      6.36000000000000E+0
   Node                   151       0    -3.50000000000000E+0
-4.00000000000000E+0      6.36000000000000E+0
   Node                   152       0    -3.50000000000000E+0
-3.50000000000000E+0      6.36000000000000E+0
   Node                   153       0    -3.50000000000000E+0
-3.00000000000000E+0      6.36000000000000E+0
   Node                   154       0    -3.50000000000000E+0
-2.50000000000000E+0      6.36000000000000E+0
   Node                   155       0    -3.50000000000000E+0
-2.00000000000000E+0      6.36000000000000E+0
   Node                   156       0    -3.50000000000000E+0
-1.50000000000000E+0      6.36000000000000E+0
   Node                   157       0    -3.50000000000000E+0
-1.00000000000000E+0      6.36000000000000E+0
   Node                   158       0    -3.50000000000000E+0
-5.00000000000000E-1      6.36000000000000E+0
   Node                   159       0    -6.50000000000000E+0
-1.35000000000000E+1      6.36000000000000E+0
   Node                   160       0    -6.50000000000000E+0
-1.30000000000000E+1      6.36000000000000E+0
   Node                   161       0    -6.50000000000000E+0
-1.25000000000000E+1      6.36000000000000E+0
   Node                   162       0    -6.50000000000000E+0
```

```
-1.20000000000000E+1      6.36000000000000E+0
   Node                   163       0    -6.50000000000000E+0
-1.15000000000000E+1      6.36000000000000E+0
   Node                   164       0    -6.50000000000000E+0
-1.10000000000000E+1      6.36000000000000E+0
   Node                   165       0    -6.50000000000000E+0
-1.05000000000000E+1      6.36000000000000E+0
   Node                   166       0    -6.50000000000000E+0
-1.00000000000000E+1      6.36000000000000E+0
   Node                   167       0    -6.50000000000000E+0
-9.50000000000000E+0      6.36000000000000E+0
   Node                   168       0    -6.50000000000000E+0
-9.00000000000000E+0      6.36000000000000E+0
   Node                   169       0    -6.50000000000000E+0
-8.50000000000000E+0      6.36000000000000E+0
   Node                   170       0    -6.50000000000000E+0
-8.00000000000000E+0      6.36000000000000E+0
   Node                   171       0    -6.50000000000000E+0
-7.50000000000000E+0      6.36000000000000E+0
   Node                   172       0    -6.50000000000000E+0
-7.00000000000000E+0      6.36000000000000E+0
   Node                   173       0    -6.50000000000000E+0
-6.00000000000000E+0      6.36000000000000E+0
   Node                   174       0    -6.50000000000000E+0
-5.50000000000000E+0      6.36000000000000E+0
   Node                   175       0    -6.50000000000000E+0
-5.00000000000000E+0      6.36000000000000E+0
   Node                   176       0    -6.50000000000000E+0
-4.50000000000000E+0      6.36000000000000E+0
   Node                   177       0    -6.50000000000000E+0
-4.00000000000000E+0      6.36000000000000E+0
   Node                   178       0    -6.50000000000000E+0
-3.50000000000000E+0      6.36000000000000E+0
   Node                   179       0    -6.50000000000000E+0
-3.00000000000000E+0      6.36000000000000E+0
   Node                   180       0    -6.50000000000000E+0
-2.50000000000000E+0      6.36000000000000E+0
   Node                   181       0    -6.50000000000000E+0
-2.00000000000000E+0      6.36000000000000E+0
   Node                   182       0    -6.50000000000000E+0
-1.50000000000000E+0      6.36000000000000E+0
   Node                   183       0    -6.50000000000000E+0
-1.00000000000000E+0      6.36000000000000E+0
   Node                   184       0    -6.50000000000000E+0
-5.00000000000000E-1      6.36000000000000E+0
   Node                   185       0    -9.50000000000000E+0
-1.35000000000000E+1      6.36000000000000E+0
   Node                   186       0    -9.50000000000000E+0
-1.30000000000000E+1      6.36000000000000E+0
   Node                   187       0    -9.50000000000000E+0
-1.25000000000000E+1      6.36000000000000E+0
   Node                   188       0    -9.50000000000000E+0
-1.20000000000000E+1      6.36000000000000E+0
   Node                   189       0    -9.50000000000000E+0
```

```
-1.15000000000000E+1      6.36000000000000E+0
   Node                   190       0    -9.50000000000000E+0
-1.10000000000000E+1      6.36000000000000E+0
   Node                   191       0    -9.50000000000000E+0
-1.05000000000000E+1      6.36000000000000E+0
   Node                   192       0    -9.50000000000000E+0
-1.00000000000000E+1      6.36000000000000E+0
   Node                   193       0    -9.50000000000000E+0
-9.50000000000000E+0      6.36000000000000E+0
   Node                   194       0    -9.50000000000000E+0
-9.00000000000000E+0      6.36000000000000E+0
   Node                   195       0    -9.50000000000000E+0
-8.50000000000000E+0      6.36000000000000E+0
   Node                   196       0    -9.50000000000000E+0
-8.00000000000000E+0      6.36000000000000E+0
   Node                   197       0    -9.50000000000000E+0
-7.50000000000000E+0      6.36000000000000E+0
   Node                   198       0    -9.50000000000000E+0
-7.00000000000000E+0      6.36000000000000E+0
   Node                   199       0    -9.50000000000000E+0
-6.00000000000000E+0      6.36000000000000E+0
   Node                   200       0    -9.50000000000000E+0
-5.50000000000000E+0      6.36000000000000E+0
   Node                   201       0    -9.50000000000000E+0
-5.00000000000000E+0      6.36000000000000E+0
   Node                   202       0    -9.50000000000000E+0
-4.50000000000000E+0      6.36000000000000E+0
   Node                   203       0    -9.50000000000000E+0
-4.00000000000000E+0      6.36000000000000E+0
   Node                   204       0    -9.50000000000000E+0
-3.50000000000000E+0      6.36000000000000E+0
   Node                   205       0    -9.50000000000000E+0
-3.00000000000000E+0      6.36000000000000E+0
   Node                   206       0    -9.50000000000000E+0
-2.50000000000000E+0      6.36000000000000E+0
   Node                   207       0    -9.50000000000000E+0
-2.00000000000000E+0      6.36000000000000E+0
   Node                   208       0    -9.50000000000000E+0
-1.50000000000000E+0      6.36000000000000E+0
   Node                   209       0    -9.50000000000000E+0
-1.00000000000000E+0      6.36000000000000E+0
   Node                   210       0    -9.50000000000000E+0
-5.00000000000000E-1      6.36000000000000E+0
   Node                   211       0    -1.25000000000000E+1
-1.35000000000000E+1      6.36000000000000E+0
   Node                   212       0    -1.25000000000000E+1
-1.30000000000000E+1      6.36000000000000E+0
   Node                   213       0    -1.25000000000000E+1
-1.25000000000000E+1      6.36000000000000E+0
   Node                   214       0    -1.25000000000000E+1
-1.20000000000000E+1      6.36000000000000E+0
   Node                   215       0    -1.25000000000000E+1
-1.15000000000000E+1      6.36000000000000E+0
   Node                   216       0    -1.25000000000000E+1
```

```
-1.10000000000000E+1      6.36000000000000E+0
   Node                   217       0    -1.25000000000000E+1
-1.05000000000000E+1      6.36000000000000E+0
   Node                   218       0    -1.25000000000000E+1
-1.00000000000000E+1      6.36000000000000E+0
   Node                   219       0    -1.25000000000000E+1
-9.50000000000000E+0      6.36000000000000E+0
   Node                   220       0    -1.25000000000000E+1
-9.00000000000000E+0      6.36000000000000E+0
   Node                   221       0    -1.25000000000000E+1
-8.50000000000000E+0      6.36000000000000E+0
   Node                   222       0    -1.25000000000000E+1
-8.00000000000000E+0      6.36000000000000E+0
   Node                   223       0    -1.25000000000000E+1
-7.50000000000000E+0      6.36000000000000E+0
   Node                   224       0    -1.25000000000000E+1
-7.00000000000000E+0      6.36000000000000E+0
   Node                   225       0    -1.25000000000000E+1
-6.00000000000000E+0      6.36000000000000E+0
   Node                   226       0    -1.25000000000000E+1
-5.50000000000000E+0      6.36000000000000E+0
   Node                   227       0    -1.25000000000000E+1
-5.00000000000000E+0      6.36000000000000E+0
   Node                   228       0    -1.25000000000000E+1
-4.50000000000000E+0      6.36000000000000E+0
   Node                   229       0    -1.25000000000000E+1
-4.00000000000000E+0      6.36000000000000E+0
   Node                   230       0    -1.25000000000000E+1
-3.50000000000000E+0      6.36000000000000E+0
   Node                   231       0    -1.25000000000000E+1
-3.00000000000000E+0      6.36000000000000E+0
   Node                   232       0    -1.25000000000000E+1
-2.50000000000000E+0      6.36000000000000E+0
   Node                   233       0    -1.25000000000000E+1
-2.00000000000000E+0      6.36000000000000E+0
   Node                   234       0    -1.25000000000000E+1
-1.50000000000000E+0      6.36000000000000E+0
   Node                   235       0    -1.25000000000000E+1
-1.00000000000000E+0      6.36000000000000E+0
   Node                   236       0    -1.25000000000000E+1
-5.00000000000000E-1      6.36000000000000E+0
   Node                   237       0    -1.55000000000000E+1
-1.35000000000000E+1      6.36000000000000E+0
   Node                   238       0    -1.55000000000000E+1
-1.30000000000000E+1      6.36000000000000E+0
   Node                   239       0    -1.55000000000000E+1
-1.25000000000000E+1      6.36000000000000E+0
   Node                   240       0    -1.55000000000000E+1
-1.20000000000000E+1      6.36000000000000E+0
   Node                   241       0    -1.55000000000000E+1
-1.15000000000000E+1      6.36000000000000E+0
   Node                   242       0    -1.55000000000000E+1
-1.10000000000000E+1      6.36000000000000E+0
   Node                   243       0    -1.55000000000000E+1
```

```
-1.05000000000000E+1      6.36000000000000E+0
   Node                   244       0    -1.55000000000000E+1
-1.00000000000000E+1      6.36000000000000E+0
   Node                   245       0    -1.55000000000000E+1
-9.50000000000000E+0      6.36000000000000E+0
   Node                   246       0    -1.55000000000000E+1
-9.00000000000000E+0      6.36000000000000E+0
   Node                   247       0    -1.55000000000000E+1
-8.50000000000000E+0      6.36000000000000E+0
   Node                   248       0    -1.55000000000000E+1
-8.00000000000000E+0      6.36000000000000E+0
   Node                   249       0    -1.55000000000000E+1
-7.50000000000000E+0      6.36000000000000E+0
   Node                   250       0    -1.55000000000000E+1
-7.00000000000000E+0      6.36000000000000E+0
   Node                   251       0    -1.55000000000000E+1
-6.00000000000000E+0      6.36000000000000E+0
   Node                   252       0    -1.55000000000000E+1
-5.50000000000000E+0      6.36000000000000E+0
   Node                   253       0    -1.55000000000000E+1
-5.00000000000000E+0      6.36000000000000E+0
   Node                   254       0    -1.55000000000000E+1
-4.50000000000000E+0      6.36000000000000E+0
   Node                   255       0    -1.55000000000000E+1
-4.00000000000000E+0      6.36000000000000E+0
   Node                   256       0    -1.55000000000000E+1
-3.50000000000000E+0      6.36000000000000E+0
   Node                   257       0    -1.55000000000000E+1
-3.00000000000000E+0      6.36000000000000E+0
   Node                   258       0    -1.55000000000000E+1
-2.50000000000000E+0      6.36000000000000E+0
   Node                   259       0    -1.55000000000000E+1
-2.00000000000000E+0      6.36000000000000E+0
   Node                   260       0    -1.55000000000000E+1
-1.50000000000000E+0      6.36000000000000E+0
   Node                   261       0    -1.55000000000000E+1
-1.00000000000000E+0      6.36000000000000E+0
   Node                   262       0    -1.55000000000000E+1
-5.00000000000000E-1      6.36000000000000E+0
   Node                   263       0    -1.85000000000000E+1
-1.35000000000000E+1      6.36000000000000E+0
   Node                   264       0    -1.85000000000000E+1
-1.30000000000000E+1      6.36000000000000E+0
   Node                   265       0    -1.85000000000000E+1
-1.25000000000000E+1      6.36000000000000E+0
   Node                   266       0    -1.85000000000000E+1
-1.20000000000000E+1      6.36000000000000E+0
   Node                   267       0    -1.85000000000000E+1
-1.15000000000000E+1      6.36000000000000E+0
   Node                   268       0    -1.85000000000000E+1
-1.10000000000000E+1      6.36000000000000E+0
   Node                   269       0    -1.85000000000000E+1
-1.05000000000000E+1      6.36000000000000E+0
   Node                   270       0    -1.85000000000000E+1
```

```
-1.00000000000000E+1      6.36000000000000E+0
   Node                   271       0    -1.85000000000000E+1
-9.50000000000000E+0      6.36000000000000E+0
   Node                   272       0    -1.85000000000000E+1
-9.00000000000000E+0      6.36000000000000E+0
   Node                   273       0    -1.85000000000000E+1
-8.50000000000000E+0      6.36000000000000E+0
   Node                   274       0    -1.85000000000000E+1
-8.00000000000000E+0      6.36000000000000E+0
   Node                   275       0    -1.85000000000000E+1
-7.50000000000000E+0      6.36000000000000E+0
   Node                   276       0    -1.85000000000000E+1
-7.00000000000000E+0      6.36000000000000E+0
   Node                   277       0    -1.85000000000000E+1
-6.00000000000000E+0      6.36000000000000E+0
   Node                   278       0    -1.85000000000000E+1
-5.50000000000000E+0      6.36000000000000E+0
   Node                   279       0    -1.85000000000000E+1
-5.00000000000000E+0      6.36000000000000E+0
   Node                   280       0    -1.85000000000000E+1
-4.50000000000000E+0      6.36000000000000E+0
   Node                   281       0    -1.85000000000000E+1
-4.00000000000000E+0      6.36000000000000E+0
   Node                   282       0    -1.85000000000000E+1
-3.50000000000000E+0      6.36000000000000E+0
   Node                   283       0    -1.85000000000000E+1
-3.00000000000000E+0      6.36000000000000E+0
   Node                   284       0    -1.85000000000000E+1
-2.50000000000000E+0      6.36000000000000E+0
   Node                   285       0    -1.85000000000000E+1
-2.00000000000000E+0      6.36000000000000E+0
   Node                   286       0    -1.85000000000000E+1
-1.50000000000000E+0      6.36000000000000E+0
   Node                   287       0    -1.85000000000000E+1
-1.00000000000000E+0      6.36000000000000E+0
   Node                   288       0    -1.85000000000000E+1
-5.00000000000000E-1      6.36000000000000E+0
   Node                   289       0    -2.15000000000000E+1
-1.35000000000000E+1      6.36000000000000E+0
   Node                   290       0    -2.15000000000000E+1
-1.30000000000000E+1      6.36000000000000E+0
   Node                   291       0    -2.15000000000000E+1
-1.25000000000000E+1      6.36000000000000E+0
   Node                   292       0    -2.15000000000000E+1
-1.20000000000000E+1      6.36000000000000E+0
   Node                   293       0    -2.15000000000000E+1
-1.15000000000000E+1      6.36000000000000E+0
   Node                   294       0    -2.15000000000000E+1
-1.10000000000000E+1      6.36000000000000E+0
   Node                   295       0    -2.15000000000000E+1
-1.05000000000000E+1      6.36000000000000E+0
   Node                   296       0    -2.15000000000000E+1
-1.00000000000000E+1      6.36000000000000E+0
   Node                   297       0    -2.15000000000000E+1
```

-9.50000000000000E+0 6.36000000000000E+0
Node 298 0 -2.15000000000000E+1
-9.00000000000000E+0 6.36000000000000E+0
Node 299 0 -2.15000000000000E+1
-8.50000000000000E+0 6.36000000000000E+0
Node 300 0 -2.15000000000000E+1
-8.00000000000000E+0 6.36000000000000E+0
Node 301 0 -2.15000000000000E+1
-7.50000000000000E+0 6.36000000000000E+0
Node 302 0 -2.15000000000000E+1
-7.00000000000000E+0 6.36000000000000E+0
Node 303 0 -2.15000000000000E+1
-6.00000000000000E+0 6.36000000000000E+0
Node 304 0 -2.15000000000000E+1
-5.50000000000000E+0 6.36000000000000E+0
Node 305 0 -2.15000000000000E+1
-5.00000000000000E+0 6.36000000000000E+0
Node 306 0 -2.15000000000000E+1
-4.50000000000000E+0 6.36000000000000E+0
Node 307 0 -2.15000000000000E+1
-4.00000000000000E+0 6.36000000000000E+0
Node 308 0 -2.15000000000000E+1
-3.50000000000000E+0 6.36000000000000E+0
Node 309 0 -2.15000000000000E+1
-3.00000000000000E+0 6.36000000000000E+0
Node 310 0 -2.15000000000000E+1
-2.50000000000000E+0 6.36000000000000E+0
Node 311 0 -2.15000000000000E+1
-2.00000000000000E+0 6.36000000000000E+0
Node 312 0 -2.15000000000000E+1
-1.50000000000000E+0 6.36000000000000E+0
Node 313 0 -2.15000000000000E+1
-1.00000000000000E+0 6.36000000000000E+0
Node 314 0 -2.15000000000000E+1
-5.00000000000000E-1 6.36000000000000E+0
Node 315 0 -2.45000000000000E+1
-1.35000000000000E+1 6.36000000000000E+0
Node 316 0 -2.45000000000000E+1
-1.30000000000000E+1 6.36000000000000E+0
Node 317 0 -2.45000000000000E+1
-1.25000000000000E+1 6.36000000000000E+0
Node 318 0 -2.45000000000000E+1
-1.20000000000000E+1 6.36000000000000E+0
Node 319 0 -2.45000000000000E+1
-1.15000000000000E+1 6.36000000000000E+0
Node 320 0 -2.45000000000000E+1
-1.10000000000000E+1 6.36000000000000E+0
Node 321 0 -2.45000000000000E+1
-1.05000000000000E+1 6.36000000000000E+0
Node 322 0 -2.45000000000000E+1
-1.00000000000000E+1 6.36000000000000E+0
Node 323 0 -2.45000000000000E+1
-9.50000000000000E+0 6.36000000000000E+0
Node 324 0 -2.45000000000000E+1

```
-9.00000000000000E+0      6.36000000000000E+0
   Node                   325       0    -2.45000000000000E+1
-8.50000000000000E+0      6.36000000000000E+0
   Node                   326       0    -2.45000000000000E+1
-8.00000000000000E+0      6.36000000000000E+0
   Node                   327       0    -2.45000000000000E+1
-7.50000000000000E+0      6.36000000000000E+0
   Node                   328       0    -2.45000000000000E+1
-7.00000000000000E+0      6.36000000000000E+0
   Node                   329       0    -2.45000000000000E+1
-6.00000000000000E+0      6.36000000000000E+0
   Node                   330       0    -2.45000000000000E+1
-5.50000000000000E+0      6.36000000000000E+0
   Node                   331       0    -2.45000000000000E+1
-5.00000000000000E+0      6.36000000000000E+0
   Node                   332       0    -2.45000000000000E+1
-4.50000000000000E+0      6.36000000000000E+0
   Node                   333       0    -2.45000000000000E+1
-4.00000000000000E+0      6.36000000000000E+0
   Node                   334       0    -2.45000000000000E+1
-3.50000000000000E+0      6.36000000000000E+0
   Node                   335       0    -2.45000000000000E+1
-3.00000000000000E+0      6.36000000000000E+0
   Node                   336       0    -2.45000000000000E+1
-2.50000000000000E+0      6.36000000000000E+0
   Node                   337       0    -2.45000000000000E+1
-2.00000000000000E+0      6.36000000000000E+0
   Node                   338       0    -2.45000000000000E+1
-1.50000000000000E+0      6.36000000000000E+0
   Node                   339       0    -2.45000000000000E+1
-1.00000000000000E+0      6.36000000000000E+0
   Node                   340       0    -2.45000000000000E+1
-5.00000000000000E-1      6.36000000000000E+0
   Node                   341       0    -2.50000000000000E+1
0.00000000000000E+0      6.36000000000000E+0
   Node                   342       0    -2.55000000000000E+1
0.00000000000000E+0      6.36000000000000E+0
   Node                   343       0    -2.60000000000000E+1
0.00000000000000E+0      6.36000000000000E+0
   Node                   344       0    -2.65000000000000E+1
0.00000000000000E+0      6.36000000000000E+0
   Node                   345       0    -2.70000000000000E+1
0.00000000000000E+0      6.36000000000000E+0
   Node                   346       0     0.00000000000000E+0
-1.77635683940025E-15     0.00000000000000E+0
   Node                   347       0    -3.00000000000000E+0
0.00000000000000E+0      0.00000000000000E+0
   Node                   348       0    -5.30000000000000E+0
0.00000000000000E+0      0.00000000000000E+0
   Node                   349       0    -5.75000000000000E+0
0.00000000000000E+0      0.00000000000000E+0
   Node                   350       0    -9.00000000000000E+0
0.00000000000000E+0      0.00000000000000E+0
   Node                   351       0    -1.20000000000000E+1
```

```
0.00000000000000E+0      0.00000000000000E+0
   Node                   352       0    -1.50000000000000E+1
0.00000000000000E+0      0.00000000000000E+0
   Node                   353       0    -1.80000000000000E+1
0.00000000000000E+0      0.00000000000000E+0
   Node                   354       0    -1.98125000000000E+1
0.00000000000000E+0      0.00000000000000E+0
   Node                   355       0    -2.02500000000000E+1
0.00000000000000E+0      0.00000000000000E+0
   Node                   356       0    -2.07500000000000E+1
0.00000000000000E+0      0.00000000000000E+0
   Node                   357       0    -2.40000000000000E+1
0.00000000000000E+0      0.00000000000000E+0
   Node                   358       0    -2.70000000000000E+1
0.00000000000000E+0      0.00000000000000E+0
   Node                   359       0    -2.80000000000000E+1
-1.77635683940025E-15     0.00000000000000E+0
   Node                   360       0    -2.50000000000000E+1
0.00000000000000E+0      0.00000000000000E+0
   Node                   361       0    -2.55000000000000E+1
0.00000000000000E+0      0.00000000000000E+0
   Node                   362       0    -2.60000000000000E+1
0.00000000000000E+0      0.00000000000000E+0
   Node                   363       0    -2.65000000000000E+1
0.00000000000000E+0      0.00000000000000E+0
   Node                   364       0    -2.20000000000000E+1
0.00000000000000E+0      0.00000000000000E+0
   Node                   365       0    -2.25000000000000E+1
0.00000000000000E+0      0.00000000000000E+0
   Node                   366       0    -2.30000000000000E+1
0.00000000000000E+0      0.00000000000000E+0
   Node                   367       0    -2.35000000000000E+1
0.00000000000000E+0      0.00000000000000E+0
   Node                   368       0    -1.00000000000000E+0
0.00000000000000E+0      0.00000000000000E+0
   Node                   369       0    -1.50000000000000E+0
0.00000000000000E+0      0.00000000000000E+0
   Node                   370       0    -2.00000000000000E+0
0.00000000000000E+0      0.00000000000000E+0
   Node                   371       0    -2.50000000000000E+0
0.00000000000000E+0      0.00000000000000E+0
   Node                   372       0    -7.00000000000000E+0
0.00000000000000E+0      0.00000000000000E+0
   Node                   373       0    -7.50000000000000E+0
0.00000000000000E+0      0.00000000000000E+0
   Node                   374       0    -8.00000000000000E+0
0.00000000000000E+0      0.00000000000000E+0
   Node                   375       0    -8.50000000000000E+0
0.00000000000000E+0      0.00000000000000E+0
   Node                   376       0    -1.00000000000000E+1
0.00000000000000E+0      0.00000000000000E+0
   Node                   377       0    -1.05000000000000E+1
0.00000000000000E+0      0.00000000000000E+0
   Node                   378       0    -1.10000000000000E+1
```

```
0.00000000000000E+0      0.00000000000000E+0
   Node                   379       0    -1.15000000000000E+1
0.00000000000000E+0      0.00000000000000E+0
   Node                   380       0    -1.30000000000000E+1
0.00000000000000E+0      0.00000000000000E+0
   Node                   381       0    -1.35000000000000E+1
0.00000000000000E+0      0.00000000000000E+0
   Node                   382       0    -1.40000000000000E+1
0.00000000000000E+0      0.00000000000000E+0
   Node                   383       0    -1.45000000000000E+1
0.00000000000000E+0      0.00000000000000E+0
   Node                   384       0    -1.60000000000000E+1
0.00000000000000E+0      0.00000000000000E+0
   Node                   385       0    -1.65000000000000E+1
0.00000000000000E+0      0.00000000000000E+0
   Node                   386       0    -1.70000000000000E+1
0.00000000000000E+0      0.00000000000000E+0
   Node                   387       0    -1.75000000000000E+1
0.00000000000000E+0      0.00000000000000E+0
   Node                   388       0    -1.89375000000000E+1
0.00000000000000E+0      0.00000000000000E+0
   Node                   389       0    -1.93750000000000E+1
0.00000000000000E+0      0.00000000000000E+0
   Node                   390       0    -3.95000000000000E+0
0.00000000000000E+0      0.00000000000000E+0
   Node                   391       0    -4.40000000000000E+0
0.00000000000000E+0      0.00000000000000E+0
   Node                   392       0    -4.85000000000000E+0
0.00000000000000E+0      0.00000000000000E+0
   Node                   393       0    -2.70000000000000E+1
-3.00000000000000E+0      6.36000000000000E+0
   Node                   394       0    -2.50000000000000E+1
-3.00000000000000E+0      6.36000000000000E+0
   Node                   395       0    -2.55000000000000E+1
-3.00000000000000E+0      6.36000000000000E+0
   Node                   396       0    -2.60000000000000E+1
-3.00000000000000E+0      6.36000000000000E+0
   Node                   397       0    -2.65000000000000E+1
-3.00000000000000E+0      6.36000000000000E+0
   Node                   398       0     0.00000000000000E+0
-1.50000000000000E+1      0.00000000000000E+0
   Node                   399       0    -5.00000000000000E-1
-1.50000000000000E+1      0.00000000000000E+0
   Node                   400       0    -3.00000000000000E+0
-1.50000000000000E+1      0.00000000000000E+0
   Node                   401       0    -3.50000000000000E+0
-1.50000000000000E+1      0.00000000000000E+0
   Node                   402       0    -5.30000000000000E+0
-1.50000000000000E+1      0.00000000000000E+0
   Node                   403       0    -5.75000000000000E+0
-1.50000000000000E+1      0.00000000000000E+0
   Node                   404       0    -6.50000000000000E+0
-1.50000000000000E+1      0.00000000000000E+0
   Node                   405       0    -9.00000000000000E+0
```

-1.50000000000000E+1 0.00000000000000E+0
Node 406 0 -9.50000000000000E+0
-1.50000000000000E+1 0.00000000000000E+0
Node 407 0 -1.20000000000000E+1
-1.50000000000000E+1 0.00000000000000E+0
Node 408 0 -1.25000000000000E+1
-1.50000000000000E+1 0.00000000000000E+0
Node 409 0 -1.50000000000000E+1
-1.50000000000000E+1 0.00000000000000E+0
Node 410 0 -1.55000000000000E+1
-1.50000000000000E+1 0.00000000000000E+0
Node 411 0 -1.80000000000000E+1
-1.50000000000000E+1 0.00000000000000E+0
Node 412 0 -1.85000000000000E+1
-1.50000000000000E+1 0.00000000000000E+0
Node 413 0 -1.98125000000000E+1
-1.50000000000000E+1 0.00000000000000E+0
Node 414 0 -2.02500000000000E+1
-1.50000000000000E+1 0.00000000000000E+0
Node 415 0 -2.07500000000000E+1
-1.50000000000000E+1 0.00000000000000E+0
Node 416 0 -2.15000000000000E+1
-1.50000000000000E+1 0.00000000000000E+0
Node 417 0 -2.40000000000000E+1
-1.50000000000000E+1 0.00000000000000E+0
Node 418 0 -2.45000000000000E+1
-1.50000000000000E+1 0.00000000000000E+0
Node 419 0 -2.70000000000000E+1
-1.50000000000000E+1 0.00000000000000E+0
Node 420 0 -2.75000000000000E+1
-1.50000000000000E+1 0.00000000000000E+0
Node 421 0 -5.00000000000000E-1
-1.50000000000000E+1 6.36000000000000E+0
Node 422 0 -3.50000000000000E+0
-1.50000000000000E+1 6.36000000000000E+0
Node 423 0 -6.50000000000000E+0
-1.50000000000000E+1 6.36000000000000E+0
Node 424 0 -9.50000000000000E+0
-1.50000000000000E+1 6.36000000000000E+0
Node 425 0 -1.25000000000000E+1
-1.50000000000000E+1 6.36000000000000E+0
Node 426 0 -1.55000000000000E+1
-1.50000000000000E+1 6.36000000000000E+0
Node 427 0 -1.85000000000000E+1
-1.50000000000000E+1 6.36000000000000E+0
Node 428 0 -2.15000000000000E+1
-1.50000000000000E+1 6.36000000000000E+0
Node 429 0 -2.45000000000000E+1
-1.50000000000000E+1 6.36000000000000E+0
Node 430 0 -2.75000000000000E+1
-1.50000000000000E+1 6.36000000000000E+0
Node 431 0 -2.50000000000000E+1
-1.50000000000000E+1 6.36000000000000E+0
Node 432 0 -2.80000000000000E+1

-1.50000000000000E+1 0.00000000000000E+0
Node 433 0 -2.50000000000000E+1
-1.50000000000000E+1 0.00000000000000E+0
Node 434 0 -2.55000000000000E+1
-1.50000000000000E+1 0.00000000000000E+0
Node 435 0 -2.60000000000000E+1
-1.50000000000000E+1 0.00000000000000E+0
Node 436 0 -2.65000000000000E+1
-1.50000000000000E+1 0.00000000000000E+0
Node 437 0 -2.20000000000000E+1
-1.50000000000000E+1 0.00000000000000E+0
Node 438 0 -2.25000000000000E+1
-1.50000000000000E+1 0.00000000000000E+0
Node 439 0 -2.30000000000000E+1
-1.50000000000000E+1 0.00000000000000E+0
Node 440 0 -2.35000000000000E+1
-1.50000000000000E+1 0.00000000000000E+0
Node 441 0 -1.00000000000000E+0
-1.50000000000000E+1 0.00000000000000E+0
Node 442 0 -1.50000000000000E+0
-1.50000000000000E+1 0.00000000000000E+0
Node 443 0 -2.00000000000000E+0
-1.50000000000000E+1 0.00000000000000E+0
Node 444 0 -2.50000000000000E+0
-1.50000000000000E+1 0.00000000000000E+0
Node 445 0 -7.00000000000000E+0
-1.50000000000000E+1 0.00000000000000E+0
Node 446 0 -7.50000000000000E+0
-1.50000000000000E+1 0.00000000000000E+0
Node 447 0 -8.00000000000000E+0
-1.50000000000000E+1 0.00000000000000E+0
Node 448 0 -8.50000000000000E+0
-1.50000000000000E+1 0.00000000000000E+0
Node 449 0 -1.00000000000000E+1
-1.50000000000000E+1 0.00000000000000E+0
Node 450 0 -1.05000000000000E+1
-1.50000000000000E+1 0.00000000000000E+0
Node 451 0 -1.10000000000000E+1
-1.50000000000000E+1 0.00000000000000E+0
Node 452 0 -1.15000000000000E+1
-1.50000000000000E+1 0.00000000000000E+0
Node 453 0 -1.30000000000000E+1
-1.50000000000000E+1 0.00000000000000E+0
Node 454 0 -1.35000000000000E+1
-1.50000000000000E+1 0.00000000000000E+0
Node 455 0 -1.40000000000000E+1
-1.50000000000000E+1 0.00000000000000E+0
Node 456 0 -1.45000000000000E+1
-1.50000000000000E+1 0.00000000000000E+0
Node 457 0 -1.60000000000000E+1
-1.50000000000000E+1 0.00000000000000E+0
Node 458 0 -1.65000000000000E+1
-1.50000000000000E+1 0.00000000000000E+0
Node 459 0 -1.70000000000000E+1

```
-1.50000000000000E+1      0.00000000000000E+0
   Node                   460       0    -1.75000000000000E+1
-1.50000000000000E+1      0.00000000000000E+0
   Node                   461       0    -1.89375000000000E+1
-1.50000000000000E+1      0.00000000000000E+0
   Node                   462       0    -1.93750000000000E+1
-1.50000000000000E+1      0.00000000000000E+0
   Node                   463       0    -3.95000000000000E+0
-1.50000000000000E+1      0.00000000000000E+0
   Node                   464       0    -4.40000000000000E+0
-1.50000000000000E+1      0.00000000000000E+0
   Node                   465       0    -4.85000000000000E+0
-1.50000000000000E+1      0.00000000000000E+0
   Node                   466       0    -5.00000000000000E-1
-1.50000000000000E+1      7.00000000000000E-1
   Node                   467       0    -5.00000000000000E-1
-1.50000000000000E+1      2.00000000000000E+0
   Node                   468       0    -5.00000000000000E-1
-1.50000000000000E+1      3.00000000000000E+0
   Node                   469       0    -5.00000000000000E-1
-1.50000000000000E+1      4.00000000000000E+0
   Node                   470       0    -5.00000000000000E-1
-1.50000000000000E+1      5.00000000000000E+0
   Node                   471       0    -6.50000000000000E+0
-1.50000000000000E+1      7.00000000000000E-1
   Node                   472       0    -6.50000000000000E+0
-1.50000000000000E+1      2.00000000000000E+0
   Node                   473       0    -6.50000000000000E+0
-1.50000000000000E+1      3.00000000000000E+0
   Node                   474       0    -6.50000000000000E+0
-1.50000000000000E+1      4.00000000000000E+0
   Node                   475       0    -6.50000000000000E+0
-1.50000000000000E+1      5.00000000000000E+0
   Node                   476       0    -9.50000000000000E+0
-1.50000000000000E+1      7.00000000000000E-1
   Node                   477       0    -9.50000000000000E+0
-1.50000000000000E+1      2.00000000000000E+0
   Node                   478       0    -9.50000000000000E+0
-1.50000000000000E+1      3.00000000000000E+0
   Node                   479       0    -9.50000000000000E+0
-1.50000000000000E+1      4.00000000000000E+0
   Node                   480       0    -9.50000000000000E+0
-1.50000000000000E+1      5.00000000000000E+0
   Node                   481       0    -1.25000000000000E+1
-1.50000000000000E+1      7.00000000000000E-1
   Node                   482       0    -1.25000000000000E+1
-1.50000000000000E+1      2.00000000000000E+0
   Node                   483       0    -1.25000000000000E+1
-1.50000000000000E+1      3.00000000000000E+0
   Node                   484       0    -1.25000000000000E+1
-1.50000000000000E+1      4.00000000000000E+0
   Node                   485       0    -1.25000000000000E+1
-1.50000000000000E+1      5.00000000000000E+0
   Node                   486       0    -1.55000000000000E+1
```

-1.50000000000000E+1 7.00000000000000E-1
Node 487 0 -1.55000000000000E+1
-1.50000000000000E+1 2.00000000000000E+0
Node 488 0 -1.55000000000000E+1
-1.50000000000000E+1 3.00000000000000E+0
Node 489 0 -1.55000000000000E+1
-1.50000000000000E+1 4.00000000000000E+0
Node 490 0 -1.55000000000000E+1
-1.50000000000000E+1 5.00000000000000E+0
Node 491 0 -1.85000000000000E+1
-1.50000000000000E+1 7.00000000000000E-1
Node 492 0 -1.85000000000000E+1
-1.50000000000000E+1 2.00000000000000E+0
Node 493 0 -1.85000000000000E+1
-1.50000000000000E+1 3.00000000000000E+0
Node 494 0 -1.85000000000000E+1
-1.50000000000000E+1 4.00000000000000E+0
Node 495 0 -1.85000000000000E+1
-1.50000000000000E+1 5.00000000000000E+0
Node 496 0 -2.15000000000000E+1
-1.50000000000000E+1 7.00000000000000E-1
Node 497 0 -2.15000000000000E+1
-1.50000000000000E+1 2.00000000000000E+0
Node 498 0 -2.15000000000000E+1
-1.50000000000000E+1 3.00000000000000E+0
Node 499 0 -2.15000000000000E+1
-1.50000000000000E+1 4.00000000000000E+0
Node 500 0 -2.15000000000000E+1
-1.50000000000000E+1 5.00000000000000E+0
Node 501 0 -2.45000000000000E+1
-1.50000000000000E+1 7.00000000000000E-1
Node 502 0 -2.45000000000000E+1
-1.50000000000000E+1 2.00000000000000E+0
Node 503 0 -2.45000000000000E+1
-1.50000000000000E+1 3.00000000000000E+0
Node 504 0 -2.45000000000000E+1
-1.50000000000000E+1 4.00000000000000E+0
Node 505 0 -2.45000000000000E+1
-1.50000000000000E+1 5.00000000000000E+0
Node 506 0 -2.75000000000000E+1
-1.50000000000000E+1 7.00000000000000E-1
Node 507 0 -2.75000000000000E+1
-1.50000000000000E+1 2.00000000000000E+0
Node 508 0 -2.75000000000000E+1
-1.50000000000000E+1 3.00000000000000E+0
Node 509 0 -2.75000000000000E+1
-1.50000000000000E+1 4.00000000000000E+0
Node 510 0 -2.75000000000000E+1
-1.50000000000000E+1 5.00000000000000E+0
Node 511 0 -2.75000000000000E+1
-1.45000000000000E+1 6.36000000000000E+0
Node 512 0 -5.00000000000000E-1
-1.45000000000000E+1 6.36000000000000E+0
Node 513 0 -3.50000000000000E+0

-1.45000000000000E+1 6.36000000000000E+0
Node 514 0 -6.50000000000000E+0
-1.45000000000000E+1 6.36000000000000E+0
Node 515 0 -9.50000000000000E+0
-1.45000000000000E+1 6.36000000000000E+0
Node 516 0 -1.25000000000000E+1
-1.45000000000000E+1 6.36000000000000E+0
Node 517 0 -1.55000000000000E+1
-1.45000000000000E+1 6.36000000000000E+0
Node 518 0 -1.85000000000000E+1
-1.45000000000000E+1 6.36000000000000E+0
Node 519 0 -2.15000000000000E+1
-1.45000000000000E+1 6.36000000000000E+0
Node 520 0 -2.45000000000000E+1
-1.45000000000000E+1 6.36000000000000E+0
Node 521 0 -3.50000000000000E+0
-1.50000000000000E+1 7.00000000000000E-1
Node 522 0 -3.50000000000000E+0
-1.50000000000000E+1 2.00000000000000E+0
Node 523 0 -3.50000000000000E+0
-1.50000000000000E+1 3.00000000000000E+0
Node 524 0 -3.50000000000000E+0
-1.50000000000000E+1 4.00000000000000E+0
Node 525 0 -3.50000000000000E+0
-1.50000000000000E+1 5.00000000000000E+0
Node 526 0 -2.70000000000000E+1
-1.50000000000000E+1 6.36000000000000E+0
Node 527 0 -2.65000000000000E+1
-1.50000000000000E+1 6.36000000000000E+0
Node 528 0 -2.60000000000000E+1
-1.50000000000000E+1 6.36000000000000E+0
Node 529 0 -2.55000000000000E+1
-1.50000000000000E+1 6.36000000000000E+0
Node 530 0 -2.50000000000000E+1
-1.20000000000000E+1 6.36000000000000E+0
Node 531 0 -2.70000000000000E+1
-1.20000000000000E+1 6.36000000000000E+0
Node 532 0 -2.65000000000000E+1
-1.20000000000000E+1 6.36000000000000E+0
Node 533 0 -2.60000000000000E+1
-1.20000000000000E+1 6.36000000000000E+0
Node 534 0 -2.55000000000000E+1
-1.20000000000000E+1 6.36000000000000E+0
Node 535 0 -2.75000000000000E+1
-6.50000000000000E+0 6.36000000000000E+0
Node 536 0 -5.00000000000000E-1
-6.50000000000000E+0 6.36000000000000E+0
Node 537 0 -3.50000000000000E+0
-6.50000000000000E+0 6.36000000000000E+0
Node 538 0 -6.50000000000000E+0
-6.50000000000000E+0 6.36000000000000E+0
Node 539 0 -9.50000000000000E+0
-6.50000000000000E+0 6.36000000000000E+0
Node 540 0 -1.25000000000000E+1

-6.50000000000000E+0 6.36000000000000E+0
Node 541 0 -1.55000000000000E+1
-6.50000000000000E+0 6.36000000000000E+0
Node 542 0 -1.85000000000000E+1
-6.50000000000000E+0 6.36000000000000E+0
Node 543 0 -2.15000000000000E+1
-6.50000000000000E+0 6.36000000000000E+0
Node 544 0 -2.45000000000000E+1
-6.50000000000000E+0 6.36000000000000E+0
Node 545 0 -5.00000000000000E-1
-1.20000000000000E+0 0.00000000000000E+0
Node 546 0 0.00000000000000E+0
-1.20000000000000E+0 0.00000000000000E+0
Node 547 0 -3.50000000000000E+0
-1.20000000000000E+0 0.00000000000000E+0
Node 548 0 -3.00000000000000E+0
-1.20000000000000E+0 0.00000000000000E+0
Node 549 0 -5.75000000000000E+0
-1.20000000000000E+0 0.00000000000000E+0
Node 550 0 -5.30000000000000E+0
-1.20000000000000E+0 0.00000000000000E+0
Node 551 0 -6.50000000000000E+0
-1.20000000000000E+0 0.00000000000000E+0
Node 552 0 -9.50000000000000E+0
-1.20000000000000E+0 0.00000000000000E+0
Node 553 0 -9.00000000000000E+0
-1.20000000000000E+0 0.00000000000000E+0
Node 554 0 -1.25000000000000E+1
-1.20000000000000E+0 0.00000000000000E+0
Node 555 0 -1.20000000000000E+1
-1.20000000000000E+0 0.00000000000000E+0
Node 556 0 -1.55000000000000E+1
-1.20000000000000E+0 0.00000000000000E+0
Node 557 0 -1.50000000000000E+1
-1.20000000000000E+0 0.00000000000000E+0
Node 558 0 -1.85000000000000E+1
-1.20000000000000E+0 0.00000000000000E+0
Node 559 0 -1.80000000000000E+1
-1.20000000000000E+0 0.00000000000000E+0
Node 560 0 -2.02500000000000E+1
-1.20000000000000E+0 0.00000000000000E+0
Node 561 0 -1.98125000000000E+1
-1.20000000000000E+0 0.00000000000000E+0
Node 562 0 -2.15000000000000E+1
-1.20000000000000E+0 0.00000000000000E+0
Node 563 0 -2.07500000000000E+1
-1.20000000000000E+0 0.00000000000000E+0
Node 564 0 -2.45000000000000E+1
-1.20000000000000E+0 0.00000000000000E+0
Node 565 0 -2.40000000000000E+1
-1.20000000000000E+0 0.00000000000000E+0
Node 566 0 -2.75000000000000E+1
-1.20000000000000E+0 0.00000000000000E+0
Node 567 0 -2.70000000000000E+1

-1.20000000000000E+0 0.00000000000000E+0
Node 568 0 -2.80000000000000E+1
-1.20000000000000E+0 0.00000000000000E+0
Node 569 0 -2.50000000000000E+1
-1.20000000000000E+0 0.00000000000000E+0
Node 570 0 -2.55000000000000E+1
-1.20000000000000E+0 0.00000000000000E+0
Node 571 0 -2.60000000000000E+1
-1.20000000000000E+0 0.00000000000000E+0
Node 572 0 -2.65000000000000E+1
-1.20000000000000E+0 0.00000000000000E+0
Node 573 0 -2.20000000000000E+1
-1.20000000000000E+0 0.00000000000000E+0
Node 574 0 -2.25000000000000E+1
-1.20000000000000E+0 0.00000000000000E+0
Node 575 0 -2.30000000000000E+1
-1.20000000000000E+0 0.00000000000000E+0
Node 576 0 -2.35000000000000E+1
-1.20000000000000E+0 0.00000000000000E+0
Node 577 0 -1.00000000000000E+0
-1.20000000000000E+0 0.00000000000000E+0
Node 578 0 -1.50000000000000E+0
-1.20000000000000E+0 0.00000000000000E+0
Node 579 0 -2.00000000000000E+0
-1.20000000000000E+0 0.00000000000000E+0
Node 580 0 -2.50000000000000E+0
-1.20000000000000E+0 0.00000000000000E+0
Node 581 0 -7.00000000000000E+0
-1.20000000000000E+0 0.00000000000000E+0
Node 582 0 -7.50000000000000E+0
-1.20000000000000E+0 0.00000000000000E+0
Node 583 0 -8.00000000000000E+0
-1.20000000000000E+0 0.00000000000000E+0
Node 584 0 -8.50000000000000E+0
-1.20000000000000E+0 0.00000000000000E+0
Node 585 0 -1.00000000000000E+1
-1.20000000000000E+0 0.00000000000000E+0
Node 586 0 -1.05000000000000E+1
-1.20000000000000E+0 0.00000000000000E+0
Node 587 0 -1.10000000000000E+1
-1.20000000000000E+0 0.00000000000000E+0
Node 588 0 -1.15000000000000E+1
-1.20000000000000E+0 0.00000000000000E+0
Node 589 0 -1.30000000000000E+1
-1.20000000000000E+0 0.00000000000000E+0
Node 590 0 -1.35000000000000E+1
-1.20000000000000E+0 0.00000000000000E+0
Node 591 0 -1.40000000000000E+1
-1.20000000000000E+0 0.00000000000000E+0
Node 592 0 -1.45000000000000E+1
-1.20000000000000E+0 0.00000000000000E+0
Node 593 0 -1.60000000000000E+1
-1.20000000000000E+0 0.00000000000000E+0
Node 594 0 -1.65000000000000E+1

```
-1.20000000000000E+0      0.00000000000000E+0
   Node                   595       0    -1.70000000000000E+1
-1.20000000000000E+0      0.00000000000000E+0
   Node                   596       0    -1.75000000000000E+1
-1.20000000000000E+0      0.00000000000000E+0
   Node                   597       0    -1.89375000000000E+1
-1.20000000000000E+0      0.00000000000000E+0
   Node                   598       0    -1.93750000000000E+1
-1.20000000000000E+0      0.00000000000000E+0
   Node                   599       0    -3.95000000000000E+0
-1.20000000000000E+0      0.00000000000000E+0
   Node                   600       0    -4.40000000000000E+0
-1.20000000000000E+0      0.00000000000000E+0
   Node                   601       0    -4.85000000000000E+0
-1.20000000000000E+0      0.00000000000000E+0
   Node                   602       0     0.00000000000000E+0
-1.38000000000000E+1      0.00000000000000E+0
   Node                   603       0    -5.00000000000000E-1
-1.38000000000000E+1      0.00000000000000E+0
   Node                   604       0    -1.00000000000000E+0
-1.38000000000000E+1      0.00000000000000E+0
   Node                   605       0    -3.00000000000000E+0
-1.38000000000000E+1      0.00000000000000E+0
   Node                   606       0    -3.50000000000000E+0
-1.38000000000000E+1      0.00000000000000E+0
   Node                   607       0    -2.50000000000000E+0
-1.38000000000000E+1      0.00000000000000E+0
   Node                   608       0    -2.00000000000000E+0
-1.38000000000000E+1      0.00000000000000E+0
   Node                   609       0    -1.50000000000000E+0
-1.38000000000000E+1      0.00000000000000E+0
   Node                   610       0    -3.95000000000000E+0
-1.38000000000000E+1      0.00000000000000E+0
   Node                   611       0    -4.40000000000000E+0
-1.38000000000000E+1      0.00000000000000E+0
   Node                   612       0    -4.85000000000000E+0
-1.38000000000000E+1      0.00000000000000E+0
   Node                   613       0    -5.30000000000000E+0
-1.38000000000000E+1      0.00000000000000E+0
   Node                   614       0    -5.75000000000000E+0
-1.38000000000000E+1      0.00000000000000E+0
   Node                   615       0    -6.50000000000000E+0
-1.38000000000000E+1      0.00000000000000E+0
   Node                   616       0    -7.00000000000000E+0
-1.38000000000000E+1      0.00000000000000E+0
   Node                   617       0    -7.50000000000000E+0
-1.38000000000000E+1      0.00000000000000E+0
   Node                   618       0    -8.00000000000000E+0
-1.38000000000000E+1      0.00000000000000E+0
   Node                   619       0    -8.50000000000000E+0
-1.38000000000000E+1      0.00000000000000E+0
   Node                   620       0    -9.00000000000000E+0
-1.38000000000000E+1      0.00000000000000E+0
   Node                   621       0    -9.50000000000000E+0
```

```
-1.38000000000000E+1      0.00000000000000E+0
   Node                   622       0    -1.00000000000000E+1
-1.38000000000000E+1      0.00000000000000E+0
   Node                   623       0    -1.05000000000000E+1
-1.38000000000000E+1      0.00000000000000E+0
   Node                   624       0    -1.10000000000000E+1
-1.38000000000000E+1      0.00000000000000E+0
   Node                   625       0    -1.15000000000000E+1
-1.38000000000000E+1      0.00000000000000E+0
   Node                   626       0    -1.20000000000000E+1
-1.38000000000000E+1      0.00000000000000E+0
   Node                   627       0    -1.25000000000000E+1
-1.38000000000000E+1      0.00000000000000E+0
   Node                   628       0    -1.30000000000000E+1
-1.38000000000000E+1      0.00000000000000E+0
   Node                   629       0    -1.35000000000000E+1
-1.38000000000000E+1      0.00000000000000E+0
   Node                   630       0    -1.40000000000000E+1
-1.38000000000000E+1      0.00000000000000E+0
   Node                   631       0    -1.45000000000000E+1
-1.38000000000000E+1      0.00000000000000E+0
   Node                   632       0    -1.50000000000000E+1
-1.38000000000000E+1      0.00000000000000E+0
   Node                   633       0    -1.55000000000000E+1
-1.38000000000000E+1      0.00000000000000E+0
   Node                   634       0    -1.60000000000000E+1
-1.38000000000000E+1      0.00000000000000E+0
   Node                   635       0    -1.65000000000000E+1
-1.38000000000000E+1      0.00000000000000E+0
   Node                   636       0    -1.70000000000000E+1
-1.38000000000000E+1      0.00000000000000E+0
   Node                   637       0    -1.75000000000000E+1
-1.38000000000000E+1      0.00000000000000E+0
   Node                   638       0    -1.80000000000000E+1
-1.38000000000000E+1      0.00000000000000E+0
   Node                   639       0    -1.85000000000000E+1
-1.38000000000000E+1      0.00000000000000E+0
   Node                   640       0    -1.89375000000000E+1
-1.38000000000000E+1      0.00000000000000E+0
   Node                   641       0    -1.93750000000000E+1
-1.38000000000000E+1      0.00000000000000E+0
   Node                   642       0    -1.98125000000000E+1
-1.38000000000000E+1      0.00000000000000E+0
   Node                   643       0    -2.02500000000000E+1
-1.38000000000000E+1      0.00000000000000E+0
   Node                   644       0    -2.07500000000000E+1
-1.38000000000000E+1      0.00000000000000E+0
   Node                   645       0    -2.15000000000000E+1
-1.38000000000000E+1      0.00000000000000E+0
   Node                   646       0    -2.20000000000000E+1
-1.38000000000000E+1      0.00000000000000E+0
   Node                   647       0    -2.25000000000000E+1
-1.38000000000000E+1      0.00000000000000E+0
   Node                   648       0    -2.30000000000000E+1
```

-1.38000000000000E+1 0.00000000000000E+0
Node 649 0 -2.35000000000000E+1
-1.38000000000000E+1 0.00000000000000E+0
Node 650 0 -2.40000000000000E+1
-1.38000000000000E+1 0.00000000000000E+0
Node 651 0 -2.45000000000000E+1
-1.38000000000000E+1 0.00000000000000E+0
Node 652 0 -2.50000000000000E+1
-1.38000000000000E+1 0.00000000000000E+0
Node 653 0 -2.55000000000000E+1
-1.38000000000000E+1 0.00000000000000E+0
Node 654 0 -2.60000000000000E+1
-1.38000000000000E+1 0.00000000000000E+0
Node 655 0 -2.65000000000000E+1
-1.38000000000000E+1 0.00000000000000E+0
Node 656 0 -2.70000000000000E+1
-1.38000000000000E+1 0.00000000000000E+0
Node 657 0 -2.75000000000000E+1
-1.38000000000000E+1 0.00000000000000E+0
Node 658 0 -2.80000000000000E+1
-1.38000000000000E+1 0.00000000000000E+0
Node 659 0 -2.20000000000000E+1
-1.50000000000000E+1 6.36000000000000E+0
Node 660 0 -1.90000000000000E+1
-1.50000000000000E+1 6.36000000000000E+0
Node 661 0 -1.60000000000000E+1
-1.50000000000000E+1 6.36000000000000E+0
Node 662 0 -1.30000000000000E+1
-1.50000000000000E+1 6.36000000000000E+0
Node 663 0 -1.00000000000000E+1
-1.50000000000000E+1 6.36000000000000E+0
Node 664 0 -7.00000000000000E+0
-1.50000000000000E+1 6.36000000000000E+0
Node 665 0 -4.00000000000000E+0
-1.50000000000000E+1 6.36000000000000E+0
Node 666 0 -1.00000000000000E+0
-1.50000000000000E+1 6.36000000000000E+0
Node 667 0 -2.40000000000000E+1
0.00000000000000E+0 6.36000000000000E+0
Node 668 0 -2.10000000000000E+1
0.00000000000000E+0 6.36000000000000E+0
Node 669 0 -1.80000000000000E+1
0.00000000000000E+0 6.36000000000000E+0
Node 670 0 -1.50000000000000E+1
0.00000000000000E+0 6.36000000000000E+0
Node 671 0 -1.20000000000000E+1
0.00000000000000E+0 6.36000000000000E+0
Node 672 0 -9.00000000000000E+0
0.00000000000000E+0 6.36000000000000E+0
Node 673 0 -6.00000000000000E+0
0.00000000000000E+0 6.36000000000000E+0
Node 674 0 -3.00000000000000E+0
0.00000000000000E+0 6.36000000000000E+0
Node 675 0 -2.40000000000000E+1

-1.50000000000000E+1 6.36000000000000E+0
Node 676 0 -2.10000000000000E+1
-1.50000000000000E+1 6.36000000000000E+0
Node 677 0 -1.80000000000000E+1
-1.50000000000000E+1 6.36000000000000E+0
Node 678 0 -1.50000000000000E+1
-1.50000000000000E+1 6.36000000000000E+0
Node 679 0 -1.20000000000000E+1
-1.50000000000000E+1 6.36000000000000E+0
Node 680 0 -9.00000000000000E+0
-1.50000000000000E+1 6.36000000000000E+0
Node 681 0 -6.00000000000000E+0
-1.50000000000000E+1 6.36000000000000E+0
Node 682 0 -3.00000000000000E+0
-1.50000000000000E+1 6.36000000000000E+0
Node 683 0 -2.35000000000000E+1
-1.50000000000000E+1 6.36000000000000E+0
Node 684 0 -2.05000000000000E+1
-1.50000000000000E+1 6.36000000000000E+0
Node 685 0 -1.75000000000000E+1
-1.50000000000000E+1 6.36000000000000E+0
Node 686 0 -1.45000000000000E+1
-1.50000000000000E+1 6.36000000000000E+0
Node 687 0 -1.15000000000000E+1
-1.50000000000000E+1 6.36000000000000E+0
Node 688 0 -8.50000000000000E+0
-1.50000000000000E+1 6.36000000000000E+0
Node 689 0 -5.50000000000000E+0
-1.50000000000000E+1 6.36000000000000E+0
Node 690 0 -2.50000000000000E+0
-1.50000000000000E+1 6.36000000000000E+0
Node 691 0 -2.30000000000000E+1
-1.50000000000000E+1 6.36000000000000E+0
Node 692 0 -2.00000000000000E+1
-1.50000000000000E+1 6.36000000000000E+0
Node 693 0 -1.70000000000000E+1
-1.50000000000000E+1 6.36000000000000E+0
Node 694 0 -1.40000000000000E+1
-1.50000000000000E+1 6.36000000000000E+0
Node 695 0 -1.10000000000000E+1
-1.50000000000000E+1 6.36000000000000E+0
Node 696 0 -8.00000000000000E+0
-1.50000000000000E+1 6.36000000000000E+0
Node 697 0 -5.00000000000000E+0
-1.50000000000000E+1 6.36000000000000E+0
Node 698 0 -2.00000000000000E+0
-1.50000000000000E+1 6.36000000000000E+0
Node 699 0 -2.25000000000000E+1
-1.50000000000000E+1 6.36000000000000E+0
Node 700 0 -1.95000000000000E+1
-1.50000000000000E+1 6.36000000000000E+0
Node 701 0 -1.65000000000000E+1
-1.50000000000000E+1 6.36000000000000E+0
Node 702 0 -1.35000000000000E+1

-1.50000000000000E+1 6.36000000000000E+0
Node 703 0 -1.05000000000000E+1
-1.50000000000000E+1 6.36000000000000E+0
Node 704 0 -7.50000000000000E+0
-1.50000000000000E+1 6.36000000000000E+0
Node 705 0 -4.50000000000000E+0
-1.50000000000000E+1 6.36000000000000E+0
Node 706 0 -1.50000000000000E+0
-1.50000000000000E+1 6.36000000000000E+0
Node 707 0 -2.20000000000000E+1
0.00000000000000E+0 6.36000000000000E+0
Node 708 0 -1.90000000000000E+1
0.00000000000000E+0 6.36000000000000E+0
Node 709 0 -1.60000000000000E+1
0.00000000000000E+0 6.36000000000000E+0
Node 710 0 -1.30000000000000E+1
0.00000000000000E+0 6.36000000000000E+0
Node 711 0 -1.00000000000000E+1
0.00000000000000E+0 6.36000000000000E+0
Node 712 0 -7.00000000000000E+0
0.00000000000000E+0 6.36000000000000E+0
Node 713 0 -4.00000000000000E+0
0.00000000000000E+0 6.36000000000000E+0
Node 714 0 -1.00000000000000E+0
0.00000000000000E+0 6.36000000000000E+0
Node 715 0 -2.25000000000000E+1
0.00000000000000E+0 6.36000000000000E+0
Node 716 0 -1.95000000000000E+1
0.00000000000000E+0 6.36000000000000E+0
Node 717 0 -1.65000000000000E+1
0.00000000000000E+0 6.36000000000000E+0
Node 718 0 -1.35000000000000E+1
0.00000000000000E+0 6.36000000000000E+0
Node 719 0 -1.05000000000000E+1
0.00000000000000E+0 6.36000000000000E+0
Node 720 0 -7.50000000000000E+0
0.00000000000000E+0 6.36000000000000E+0
Node 721 0 -4.50000000000000E+0
0.00000000000000E+0 6.36000000000000E+0
Node 722 0 -1.50000000000000E+0
0.00000000000000E+0 6.36000000000000E+0
Node 723 0 -2.30000000000000E+1
0.00000000000000E+0 6.36000000000000E+0
Node 724 0 -2.00000000000000E+1
0.00000000000000E+0 6.36000000000000E+0
Node 725 0 -1.70000000000000E+1
0.00000000000000E+0 6.36000000000000E+0
Node 726 0 -1.40000000000000E+1
0.00000000000000E+0 6.36000000000000E+0
Node 727 0 -1.10000000000000E+1
0.00000000000000E+0 6.36000000000000E+0
Node 728 0 -8.00000000000000E+0
0.00000000000000E+0 6.36000000000000E+0
Node 729 0 -5.00000000000000E+0

```
0.00000000000000E+0      6.36000000000000E+0
   Node                   730       0    -2.00000000000000E+0
0.00000000000000E+0      6.36000000000000E+0
   Node                   731       0    -2.35000000000000E+1
0.00000000000000E+0      6.36000000000000E+0
   Node                   732       0    -2.05000000000000E+1
0.00000000000000E+0      6.36000000000000E+0
   Node                   733       0    -1.75000000000000E+1
0.00000000000000E+0      6.36000000000000E+0
   Node                   734       0    -1.45000000000000E+1
0.00000000000000E+0      6.36000000000000E+0
   Node                   735       0    -1.15000000000000E+1
0.00000000000000E+0      6.36000000000000E+0
   Node                   736       0    -8.50000000000000E+0
0.00000000000000E+0      6.36000000000000E+0
   Node                   737       0    -5.50000000000000E+0
0.00000000000000E+0      6.36000000000000E+0
   Node                   738       0    -2.50000000000000E+0
0.00000000000000E+0      6.36000000000000E+0
   Node                   739       0    -2.20000000000000E+1
-1.20000000000000E+1      6.36000000000000E+0
   Node                   740       0    -1.90000000000000E+1
-1.20000000000000E+1      6.36000000000000E+0
   Node                   741       0    -1.60000000000000E+1
-1.20000000000000E+1      6.36000000000000E+0
   Node                   742       0    -1.30000000000000E+1
-1.20000000000000E+1      6.36000000000000E+0
   Node                   743       0    -1.00000000000000E+1
-1.20000000000000E+1      6.36000000000000E+0
   Node                   744       0    -7.00000000000000E+0
-1.20000000000000E+1      6.36000000000000E+0
   Node                   745       0    -4.00000000000000E+0
-1.20000000000000E+1      6.36000000000000E+0
   Node                   746       0    -1.00000000000000E+0
-1.20000000000000E+1      6.36000000000000E+0
   Node                   747       0    -2.40000000000000E+1
-1.20000000000000E+1      6.36000000000000E+0
   Node                   748       0    -2.10000000000000E+1
-1.20000000000000E+1      6.36000000000000E+0
   Node                   749       0    -1.80000000000000E+1
-1.20000000000000E+1      6.36000000000000E+0
   Node                   750       0    -1.50000000000000E+1
-1.20000000000000E+1      6.36000000000000E+0
   Node                   751       0    -1.20000000000000E+1
-1.20000000000000E+1      6.36000000000000E+0
   Node                   752       0    -9.00000000000000E+0
-1.20000000000000E+1      6.36000000000000E+0
   Node                   753       0    -6.00000000000000E+0
-1.20000000000000E+1      6.36000000000000E+0
   Node                   754       0    -3.00000000000000E+0
-1.20000000000000E+1      6.36000000000000E+0
   Node                   755       0    -2.35000000000000E+1
-1.20000000000000E+1      6.36000000000000E+0
   Node                   756       0    -2.05000000000000E+1
```

-1.20000000000000E+1 6.36000000000000E+0
Node 757 0 -1.75000000000000E+1
-1.20000000000000E+1 6.36000000000000E+0
Node 758 0 -1.45000000000000E+1
-1.20000000000000E+1 6.36000000000000E+0
Node 759 0 -1.15000000000000E+1
-1.20000000000000E+1 6.36000000000000E+0
Node 760 0 -8.50000000000000E+0
-1.20000000000000E+1 6.36000000000000E+0
Node 761 0 -5.50000000000000E+0
-1.20000000000000E+1 6.36000000000000E+0
Node 762 0 -2.50000000000000E+0
-1.20000000000000E+1 6.36000000000000E+0
Node 763 0 -2.30000000000000E+1
-1.20000000000000E+1 6.36000000000000E+0
Node 764 0 -2.00000000000000E+1
-1.20000000000000E+1 6.36000000000000E+0
Node 765 0 -1.70000000000000E+1
-1.20000000000000E+1 6.36000000000000E+0
Node 766 0 -1.40000000000000E+1
-1.20000000000000E+1 6.36000000000000E+0
Node 767 0 -1.10000000000000E+1
-1.20000000000000E+1 6.36000000000000E+0
Node 768 0 -8.00000000000000E+0
-1.20000000000000E+1 6.36000000000000E+0
Node 769 0 -5.00000000000000E+0
-1.20000000000000E+1 6.36000000000000E+0
Node 770 0 -2.00000000000000E+0
-1.20000000000000E+1 6.36000000000000E+0
Node 771 0 -2.25000000000000E+1
-1.20000000000000E+1 6.36000000000000E+0
Node 772 0 -1.95000000000000E+1
-1.20000000000000E+1 6.36000000000000E+0
Node 773 0 -1.65000000000000E+1
-1.20000000000000E+1 6.36000000000000E+0
Node 774 0 -1.35000000000000E+1
-1.20000000000000E+1 6.36000000000000E+0
Node 775 0 -1.05000000000000E+1
-1.20000000000000E+1 6.36000000000000E+0
Node 776 0 -7.50000000000000E+0
-1.20000000000000E+1 6.36000000000000E+0
Node 777 0 -4.50000000000000E+0
-1.20000000000000E+1 6.36000000000000E+0
Node 778 0 -1.50000000000000E+0
-1.20000000000000E+1 6.36000000000000E+0
Node 779 0 -2.40000000000000E+1
-3.00000000000000E+0 6.36000000000000E+0
Node 780 0 -2.10000000000000E+1
-3.00000000000000E+0 6.36000000000000E+0
Node 781 0 -1.80000000000000E+1
-3.00000000000000E+0 6.36000000000000E+0
Node 782 0 -1.50000000000000E+1
-3.00000000000000E+0 6.36000000000000E+0
Node 783 0 -1.20000000000000E+1

```
-3.00000000000000E+0      6.36000000000000E+0
   Node                   784       0    -9.00000000000000E+0
-3.00000000000000E+0      6.36000000000000E+0
   Node                   785       0    -6.00000000000000E+0
-3.00000000000000E+0      6.36000000000000E+0
   Node                   786       0    -3.00000000000000E+0
-3.00000000000000E+0      6.36000000000000E+0
   Node                   787       0    -2.20000000000000E+1
-3.00000000000000E+0      6.36000000000000E+0
   Node                   788       0    -1.90000000000000E+1
-3.00000000000000E+0      6.36000000000000E+0
   Node                   789       0    -1.60000000000000E+1
-3.00000000000000E+0      6.36000000000000E+0
   Node                   790       0    -1.30000000000000E+1
-3.00000000000000E+0      6.36000000000000E+0
   Node                   791       0    -1.00000000000000E+1
-3.00000000000000E+0      6.36000000000000E+0
   Node                   792       0    -7.00000000000000E+0
-3.00000000000000E+0      6.36000000000000E+0
   Node                   793       0    -4.00000000000000E+0
-3.00000000000000E+0      6.36000000000000E+0
   Node                   794       0    -1.00000000000000E+0
-3.00000000000000E+0      6.36000000000000E+0
   Node                   795       0    -2.25000000000000E+1
-3.00000000000000E+0      6.36000000000000E+0
   Node                   796       0    -1.95000000000000E+1
-3.00000000000000E+0      6.36000000000000E+0
   Node                   797       0    -1.65000000000000E+1
-3.00000000000000E+0      6.36000000000000E+0
   Node                   798       0    -1.35000000000000E+1
-3.00000000000000E+0      6.36000000000000E+0
   Node                   799       0    -1.05000000000000E+1
-3.00000000000000E+0      6.36000000000000E+0
   Node                   800       0    -7.50000000000000E+0
-3.00000000000000E+0      6.36000000000000E+0
   Node                   801       0    -4.50000000000000E+0
-3.00000000000000E+0      6.36000000000000E+0
   Node                   802       0    -1.50000000000000E+0
-3.00000000000000E+0      6.36000000000000E+0
   Node                   803       0    -2.30000000000000E+1
-3.00000000000000E+0      6.36000000000000E+0
   Node                   804       0    -2.00000000000000E+1
-3.00000000000000E+0      6.36000000000000E+0
   Node                   805       0    -1.70000000000000E+1
-3.00000000000000E+0      6.36000000000000E+0
   Node                   806       0    -1.40000000000000E+1
-3.00000000000000E+0      6.36000000000000E+0
   Node                   807       0    -1.10000000000000E+1
-3.00000000000000E+0      6.36000000000000E+0
   Node                   808       0    -8.00000000000000E+0
-3.00000000000000E+0      6.36000000000000E+0
   Node                   809       0    -5.00000000000000E+0
-3.00000000000000E+0      6.36000000000000E+0
   Node                   810       0    -2.00000000000000E+0
```

```
-3.00000000000000E+0      6.36000000000000E+0
   Node                   811       0    -2.35000000000000E+1
-3.00000000000000E+0      6.36000000000000E+0
   Node                   812       0    -2.05000000000000E+1
-3.00000000000000E+0      6.36000000000000E+0
   Node                   813       0    -1.75000000000000E+1
-3.00000000000000E+0      6.36000000000000E+0
   Node                   814       0    -1.45000000000000E+1
-3.00000000000000E+0      6.36000000000000E+0
   Node                   815       0    -1.15000000000000E+1
-3.00000000000000E+0      6.36000000000000E+0
   Node                   816       0    -8.50000000000000E+0
-3.00000000000000E+0      6.36000000000000E+0
   Node                   817       0    -5.50000000000000E+0
-3.00000000000000E+0      6.36000000000000E+0
   Node                   818       0    -2.50000000000000E+0
-3.00000000000000E+0      6.36000000000000E+0
   Node                   819       0     0.00000000000000E+0
-1.35500000000000E+1      0.00000000000000E+0
   Node                   820       0    -5.00000000000000E-1
-1.35500000000000E+1      0.00000000000000E+0
   Node                   821       0    -1.00000000000000E+0
-1.35500000000000E+1      0.00000000000000E+0
   Node                   822       0    -3.00000000000000E+0
-1.35500000000000E+1      0.00000000000000E+0
   Node                   823       0    -3.50000000000000E+0
-1.35500000000000E+1      0.00000000000000E+0
   Node                   824       0    -2.50000000000000E+0
-1.35500000000000E+1      0.00000000000000E+0
   Node                   825       0    -2.00000000000000E+0
-1.35500000000000E+1      0.00000000000000E+0
   Node                   826       0    -1.50000000000000E+0
-1.35500000000000E+1      0.00000000000000E+0
   Node                   827       0    -3.95000000000000E+0
-1.35500000000000E+1      0.00000000000000E+0
   Node                   828       0    -4.40000000000000E+0
-1.35500000000000E+1      0.00000000000000E+0
   Node                   829       0    -4.85000000000000E+0
-1.35500000000000E+1      0.00000000000000E+0
   Node                   830       0    -5.30000000000000E+0
-1.35500000000000E+1      0.00000000000000E+0
   Node                   831       0    -5.75000000000000E+0
-1.35500000000000E+1      0.00000000000000E+0
   Node                   832       0    -6.50000000000000E+0
-1.35500000000000E+1      0.00000000000000E+0
   Node                   833       0    -7.00000000000000E+0
-1.35500000000000E+1      0.00000000000000E+0
   Node                   834       0    -7.50000000000000E+0
-1.35500000000000E+1      0.00000000000000E+0
   Node                   835       0    -8.00000000000000E+0
-1.35500000000000E+1      0.00000000000000E+0
   Node                   836       0    -8.50000000000000E+0
-1.35500000000000E+1      0.00000000000000E+0
   Node                   837       0    -9.00000000000000E+0
```

-1.35500000000000E+1 0.00000000000000E+0
Node 838 0 -9.50000000000000E+0
-1.35500000000000E+1 0.00000000000000E+0
Node 839 0 -1.00000000000000E+1
-1.35500000000000E+1 0.00000000000000E+0
Node 840 0 -1.05000000000000E+1
-1.35500000000000E+1 0.00000000000000E+0
Node 841 0 -1.10000000000000E+1
-1.35500000000000E+1 0.00000000000000E+0
Node 842 0 -1.15000000000000E+1
-1.35500000000000E+1 0.00000000000000E+0
Node 843 0 -1.20000000000000E+1
-1.35500000000000E+1 0.00000000000000E+0
Node 844 0 -1.25000000000000E+1
-1.35500000000000E+1 0.00000000000000E+0
Node 845 0 -1.30000000000000E+1
-1.35500000000000E+1 0.00000000000000E+0
Node 846 0 -1.35000000000000E+1
-1.35500000000000E+1 0.00000000000000E+0
Node 847 0 -1.40000000000000E+1
-1.35500000000000E+1 0.00000000000000E+0
Node 848 0 -1.45000000000000E+1
-1.35500000000000E+1 0.00000000000000E+0
Node 849 0 -1.50000000000000E+1
-1.35500000000000E+1 0.00000000000000E+0
Node 850 0 -1.55000000000000E+1
-1.35500000000000E+1 0.00000000000000E+0
Node 851 0 -1.60000000000000E+1
-1.35500000000000E+1 0.00000000000000E+0
Node 852 0 -1.65000000000000E+1
-1.35500000000000E+1 0.00000000000000E+0
Node 853 0 -1.70000000000000E+1
-1.35500000000000E+1 0.00000000000000E+0
Node 854 0 -1.75000000000000E+1
-1.35500000000000E+1 0.00000000000000E+0
Node 855 0 -1.80000000000000E+1
-1.35500000000000E+1 0.00000000000000E+0
Node 856 0 -1.85000000000000E+1
-1.35500000000000E+1 0.00000000000000E+0
Node 857 0 -1.89375000000000E+1
-1.35500000000000E+1 0.00000000000000E+0
Node 858 0 -1.93750000000000E+1
-1.35500000000000E+1 0.00000000000000E+0
Node 859 0 -1.98125000000000E+1
-1.35500000000000E+1 0.00000000000000E+0
Node 860 0 -2.02500000000000E+1
-1.35500000000000E+1 0.00000000000000E+0
Node 861 0 -2.07500000000000E+1
-1.35500000000000E+1 0.00000000000000E+0
Node 862 0 -2.15000000000000E+1
-1.35500000000000E+1 0.00000000000000E+0
Node 863 0 -2.20000000000000E+1
-1.35500000000000E+1 0.00000000000000E+0
Node 864 0 -2.25000000000000E+1

-1.35500000000000E+1 0.00000000000000E+0
Node 865 0 -2.30000000000000E+1
-1.35500000000000E+1 0.00000000000000E+0
Node 866 0 -2.35000000000000E+1
-1.35500000000000E+1 0.00000000000000E+0
Node 867 0 -2.40000000000000E+1
-1.35500000000000E+1 0.00000000000000E+0
Node 868 0 -2.45000000000000E+1
-1.35500000000000E+1 0.00000000000000E+0
Node 869 0 -2.50000000000000E+1
-1.35500000000000E+1 0.00000000000000E+0
Node 870 0 -2.55000000000000E+1
-1.35500000000000E+1 0.00000000000000E+0
Node 871 0 -2.60000000000000E+1
-1.35500000000000E+1 0.00000000000000E+0
Node 872 0 -2.65000000000000E+1
-1.35500000000000E+1 0.00000000000000E+0
Node 873 0 -2.70000000000000E+1
-1.35500000000000E+1 0.00000000000000E+0
Node 874 0 -2.75000000000000E+1
-1.35500000000000E+1 0.00000000000000E+0
Node 875 0 -2.80000000000000E+1
-1.35500000000000E+1 0.00000000000000E+0
Node 876 0 -5.00000000000000E-1
-1.52500000000000E+1 0.00000000000000E+0
Node 877 0 0.00000000000000E+0
-1.52500000000000E+1 0.00000000000000E+0
Node 878 0 -1.00000000000000E+0
-1.52500000000000E+1 0.00000000000000E+0
Node 879 0 -3.50000000000000E+0
-1.52500000000000E+1 0.00000000000000E+0
Node 880 0 -3.00000000000000E+0
-1.52500000000000E+1 0.00000000000000E+0
Node 881 0 -2.50000000000000E+0
-1.52500000000000E+1 0.00000000000000E+0
Node 882 0 -2.00000000000000E+0
-1.52500000000000E+1 0.00000000000000E+0
Node 883 0 -1.50000000000000E+0
-1.52500000000000E+1 0.00000000000000E+0
Node 884 0 -3.95000000000000E+0
-1.52500000000000E+1 0.00000000000000E+0
Node 885 0 -4.40000000000000E+0
-1.52500000000000E+1 0.00000000000000E+0
Node 886 0 -4.85000000000000E+0
-1.52500000000000E+1 0.00000000000000E+0
Node 887 0 -5.30000000000000E+0
-1.52500000000000E+1 0.00000000000000E+0
Node 888 0 -5.75000000000000E+0
-1.52500000000000E+1 0.00000000000000E+0
Node 889 0 -6.50000000000000E+0
-1.52500000000000E+1 0.00000000000000E+0
Node 890 0 -7.00000000000000E+0
-1.52500000000000E+1 0.00000000000000E+0
Node 891 0 -7.50000000000000E+0

-1.52500000000000E+1 0.00000000000000E+0
Node 892 0 -8.00000000000000E+0
-1.52500000000000E+1 0.00000000000000E+0
Node 893 0 -8.50000000000000E+0
-1.52500000000000E+1 0.00000000000000E+0
Node 894 0 -9.00000000000000E+0
-1.52500000000000E+1 0.00000000000000E+0
Node 895 0 -9.50000000000000E+0
-1.52500000000000E+1 0.00000000000000E+0
Node 896 0 -1.00000000000000E+1
-1.52500000000000E+1 0.00000000000000E+0
Node 897 0 -1.05000000000000E+1
-1.52500000000000E+1 0.00000000000000E+0
Node 898 0 -1.10000000000000E+1
-1.52500000000000E+1 0.00000000000000E+0
Node 899 0 -1.15000000000000E+1
-1.52500000000000E+1 0.00000000000000E+0
Node 900 0 -1.20000000000000E+1
-1.52500000000000E+1 0.00000000000000E+0
Node 901 0 -1.25000000000000E+1
-1.52500000000000E+1 0.00000000000000E+0
Node 902 0 -1.30000000000000E+1
-1.52500000000000E+1 0.00000000000000E+0
Node 903 0 -1.35000000000000E+1
-1.52500000000000E+1 0.00000000000000E+0
Node 904 0 -1.40000000000000E+1
-1.52500000000000E+1 0.00000000000000E+0
Node 905 0 -1.45000000000000E+1
-1.52500000000000E+1 0.00000000000000E+0
Node 906 0 -1.50000000000000E+1
-1.52500000000000E+1 0.00000000000000E+0
Node 907 0 -1.55000000000000E+1
-1.52500000000000E+1 0.00000000000000E+0
Node 908 0 -1.60000000000000E+1
-1.52500000000000E+1 0.00000000000000E+0
Node 909 0 -1.65000000000000E+1
-1.52500000000000E+1 0.00000000000000E+0
Node 910 0 -1.70000000000000E+1
-1.52500000000000E+1 0.00000000000000E+0
Node 911 0 -1.75000000000000E+1
-1.52500000000000E+1 0.00000000000000E+0
Node 912 0 -1.80000000000000E+1
-1.52500000000000E+1 0.00000000000000E+0
Node 913 0 -1.85000000000000E+1
-1.52500000000000E+1 0.00000000000000E+0
Node 914 0 -1.89375000000000E+1
-1.52500000000000E+1 0.00000000000000E+0
Node 915 0 -1.93750000000000E+1
-1.52500000000000E+1 0.00000000000000E+0
Node 916 0 -1.98125000000000E+1
-1.52500000000000E+1 0.00000000000000E+0
Node 917 0 -2.02500000000000E+1
-1.52500000000000E+1 0.00000000000000E+0
Node 918 0 -2.07500000000000E+1

-1.52500000000000E+1 0.00000000000000E+0
Node 919 0 -2.15000000000000E+1
-1.52500000000000E+1 0.00000000000000E+0
Node 920 0 -2.20000000000000E+1
-1.52500000000000E+1 0.00000000000000E+0
Node 921 0 -2.25000000000000E+1
-1.52500000000000E+1 0.00000000000000E+0
Node 922 0 -2.30000000000000E+1
-1.52500000000000E+1 0.00000000000000E+0
Node 923 0 -2.35000000000000E+1
-1.52500000000000E+1 0.00000000000000E+0
Node 924 0 -2.40000000000000E+1
-1.52500000000000E+1 0.00000000000000E+0
Node 925 0 -2.45000000000000E+1
-1.52500000000000E+1 0.00000000000000E+0
Node 926 0 -2.50000000000000E+1
-1.52500000000000E+1 0.00000000000000E+0
Node 927 0 -2.55000000000000E+1
-1.52500000000000E+1 0.00000000000000E+0
Node 928 0 -2.60000000000000E+1
-1.52500000000000E+1 0.00000000000000E+0
Node 929 0 -2.65000000000000E+1
-1.52500000000000E+1 0.00000000000000E+0
Node 930 0 -2.70000000000000E+1
-1.52500000000000E+1 0.00000000000000E+0
Node 931 0 -2.75000000000000E+1
-1.52500000000000E+1 0.00000000000000E+0
Node 932 0 -2.80000000000000E+1
-1.52500000000000E+1 0.00000000000000E+0
Node 933 0 0.00000000000000E+0
2.50000000000000E-1 0.00000000000000E+0
Node 934 0 -5.00000000000000E-1
2.50000000000000E-1 0.00000000000000E+0
Node 935 0 -1.00000000000000E+0
2.50000000000000E-1 0.00000000000000E+0
Node 936 0 -3.00000000000000E+0
2.50000000000000E-1 0.00000000000000E+0
Node 937 0 -3.50000000000000E+0
2.50000000000000E-1 0.00000000000000E+0
Node 938 0 -2.50000000000000E+0
2.50000000000000E-1 0.00000000000000E+0
Node 939 0 -2.00000000000000E+0
2.50000000000000E-1 0.00000000000000E+0
Node 940 0 -1.50000000000000E+0
2.50000000000000E-1 0.00000000000000E+0
Node 941 0 -3.95000000000000E+0
2.50000000000000E-1 0.00000000000000E+0
Node 942 0 -4.40000000000000E+0
2.50000000000000E-1 0.00000000000000E+0
Node 943 0 -4.85000000000000E+0
2.50000000000000E-1 0.00000000000000E+0
Node 944 0 -5.30000000000000E+0
2.50000000000000E-1 0.00000000000000E+0
Node 945 0 -5.75000000000000E+0

```
2.50000000000000E-1      0.00000000000000E+0
   Node                   946       0    -6.50000000000000E+0
2.50000000000000E-1      0.00000000000000E+0
   Node                   947       0    -7.00000000000000E+0
2.50000000000000E-1      0.00000000000000E+0
   Node                   948       0    -7.50000000000000E+0
2.50000000000000E-1      0.00000000000000E+0
   Node                   949       0    -8.00000000000000E+0
2.50000000000000E-1      0.00000000000000E+0
   Node                   950       0    -8.50000000000000E+0
2.50000000000000E-1      0.00000000000000E+0
   Node                   951       0    -9.00000000000000E+0
2.50000000000000E-1      0.00000000000000E+0
   Node                   952       0    -9.50000000000000E+0
2.50000000000000E-1      0.00000000000000E+0
   Node                   953       0    -1.00000000000000E+1
2.50000000000000E-1      0.00000000000000E+0
   Node                   954       0    -1.05000000000000E+1
2.50000000000000E-1      0.00000000000000E+0
   Node                   955       0    -1.10000000000000E+1
2.50000000000000E-1      0.00000000000000E+0
   Node                   956       0    -1.15000000000000E+1
2.50000000000000E-1      0.00000000000000E+0
   Node                   957       0    -1.20000000000000E+1
2.50000000000000E-1      0.00000000000000E+0
   Node                   958       0    -1.25000000000000E+1
2.50000000000000E-1      0.00000000000000E+0
   Node                   959       0    -1.30000000000000E+1
2.50000000000000E-1      0.00000000000000E+0
   Node                   960       0    -1.35000000000000E+1
2.50000000000000E-1      0.00000000000000E+0
   Node                   961       0    -1.40000000000000E+1
2.50000000000000E-1      0.00000000000000E+0
   Node                   962       0    -1.45000000000000E+1
2.50000000000000E-1      0.00000000000000E+0
   Node                   963       0    -1.50000000000000E+1
2.50000000000000E-1      0.00000000000000E+0
   Node                   964       0    -1.55000000000000E+1
2.50000000000000E-1      0.00000000000000E+0
   Node                   965       0    -1.60000000000000E+1
2.50000000000000E-1      0.00000000000000E+0
   Node                   966       0    -1.65000000000000E+1
2.50000000000000E-1      0.00000000000000E+0
   Node                   967       0    -1.70000000000000E+1
2.50000000000000E-1      0.00000000000000E+0
   Node                   968       0    -1.75000000000000E+1
2.50000000000000E-1      0.00000000000000E+0
   Node                   969       0    -1.80000000000000E+1
2.50000000000000E-1      0.00000000000000E+0
   Node                   970       0    -1.85000000000000E+1
2.50000000000000E-1      0.00000000000000E+0
   Node                   971       0    -1.89375000000000E+1
2.50000000000000E-1      0.00000000000000E+0
   Node                   972       0    -1.93750000000000E+1
```

```
2.50000000000000E-1      0.00000000000000E+0
   Node                   973       0    -1.98125000000000E+1
2.50000000000000E-1      0.00000000000000E+0
   Node                   974       0    -2.02500000000000E+1
2.50000000000000E-1      0.00000000000000E+0
   Node                   975       0    -2.07500000000000E+1
2.50000000000000E-1      0.00000000000000E+0
   Node                   976       0    -2.15000000000000E+1
2.50000000000000E-1      0.00000000000000E+0
   Node                   977       0    -2.20000000000000E+1
2.50000000000000E-1      0.00000000000000E+0
   Node                   978       0    -2.25000000000000E+1
2.50000000000000E-1      0.00000000000000E+0
   Node                   979       0    -2.30000000000000E+1
2.50000000000000E-1      0.00000000000000E+0
   Node                   980       0    -2.35000000000000E+1
2.50000000000000E-1      0.00000000000000E+0
   Node                   981       0    -2.40000000000000E+1
2.50000000000000E-1      0.00000000000000E+0
   Node                   982       0    -2.45000000000000E+1
2.50000000000000E-1      0.00000000000000E+0
   Node                   983       0    -2.50000000000000E+1
2.50000000000000E-1      0.00000000000000E+0
   Node                   984       0    -2.55000000000000E+1
2.50000000000000E-1      0.00000000000000E+0
   Node                   985       0    -2.60000000000000E+1
2.50000000000000E-1      0.00000000000000E+0
   Node                   986       0    -2.65000000000000E+1
2.50000000000000E-1      0.00000000000000E+0
   Node                   987       0    -2.70000000000000E+1
2.50000000000000E-1      0.00000000000000E+0
   Node                   988       0    -2.75000000000000E+1
2.50000000000000E-1      0.00000000000000E+0
   Node                   989       0    -2.80000000000000E+1
2.50000000000000E-1      0.00000000000000E+0
   Node                   990       0    -5.00000000000000E-1
-1.45000000000000E+0      0.00000000000000E+0
   Node                   991       0     0.00000000000000E+0
-1.45000000000000E+0      0.00000000000000E+0
   Node                   992       0    -1.00000000000000E+0
-1.45000000000000E+0      0.00000000000000E+0
   Node                   993       0    -3.50000000000000E+0
-1.45000000000000E+0      0.00000000000000E+0
   Node                   994       0    -3.00000000000000E+0
-1.45000000000000E+0      0.00000000000000E+0
   Node                   995       0    -2.50000000000000E+0
-1.45000000000000E+0      0.00000000000000E+0
   Node                   996       0    -2.00000000000000E+0
-1.45000000000000E+0      0.00000000000000E+0
   Node                   997       0    -1.50000000000000E+0
-1.45000000000000E+0      0.00000000000000E+0
   Node                   998       0    -3.95000000000000E+0
-1.45000000000000E+0      0.00000000000000E+0
   Node                   999       0    -4.40000000000000E+0
```

-1.45000000000000E+0 0.00000000000000E+0
Node 1000 0 -4.85000000000000E+0
-1.45000000000000E+0 0.00000000000000E+0
Node 1001 0 -5.30000000000000E+0
-1.45000000000000E+0 0.00000000000000E+0
Node 1002 0 -5.75000000000000E+0
-1.45000000000000E+0 0.00000000000000E+0
Node 1003 0 -6.50000000000000E+0
-1.45000000000000E+0 0.00000000000000E+0
Node 1004 0 -7.00000000000000E+0
-1.45000000000000E+0 0.00000000000000E+0
Node 1005 0 -7.50000000000000E+0
-1.45000000000000E+0 0.00000000000000E+0
Node 1006 0 -8.00000000000000E+0
-1.45000000000000E+0 0.00000000000000E+0
Node 1007 0 -8.50000000000000E+0
-1.45000000000000E+0 0.00000000000000E+0
Node 1008 0 -9.00000000000000E+0
-1.45000000000000E+0 0.00000000000000E+0
Node 1009 0 -9.50000000000000E+0
-1.45000000000000E+0 0.00000000000000E+0
Node 1010 0 -1.00000000000000E+1
-1.45000000000000E+0 0.00000000000000E+0
Node 1011 0 -1.05000000000000E+1
-1.45000000000000E+0 0.00000000000000E+0
Node 1012 0 -1.10000000000000E+1
-1.45000000000000E+0 0.00000000000000E+0
Node 1013 0 -1.15000000000000E+1
-1.45000000000000E+0 0.00000000000000E+0
Node 1014 0 -1.20000000000000E+1
-1.45000000000000E+0 0.00000000000000E+0
Node 1015 0 -1.25000000000000E+1
-1.45000000000000E+0 0.00000000000000E+0
Node 1016 0 -1.30000000000000E+1
-1.45000000000000E+0 0.00000000000000E+0
Node 1017 0 -1.35000000000000E+1
-1.45000000000000E+0 0.00000000000000E+0
Node 1018 0 -1.40000000000000E+1
-1.45000000000000E+0 0.00000000000000E+0
Node 1019 0 -1.45000000000000E+1
-1.45000000000000E+0 0.00000000000000E+0
Node 1020 0 -1.50000000000000E+1
-1.45000000000000E+0 0.00000000000000E+0
Node 1021 0 -1.55000000000000E+1
-1.45000000000000E+0 0.00000000000000E+0
Node 1022 0 -1.60000000000000E+1
-1.45000000000000E+0 0.00000000000000E+0
Node 1023 0 -1.65000000000000E+1
-1.45000000000000E+0 0.00000000000000E+0
Node 1024 0 -1.70000000000000E+1
-1.45000000000000E+0 0.00000000000000E+0
Node 1025 0 -1.75000000000000E+1
-1.45000000000000E+0 0.00000000000000E+0
Node 1026 0 -1.80000000000000E+1

```
-1.45000000000000E+0      0.00000000000000E+0
   Node                  1027       0    -1.85000000000000E+1
-1.45000000000000E+0      0.00000000000000E+0
   Node                  1028       0    -1.89375000000000E+1
-1.45000000000000E+0      0.00000000000000E+0
   Node                  1029       0    -1.93750000000000E+1
-1.45000000000000E+0      0.00000000000000E+0
   Node                  1030       0    -1.98125000000000E+1
-1.45000000000000E+0      0.00000000000000E+0
   Node                  1031       0    -2.02500000000000E+1
-1.45000000000000E+0      0.00000000000000E+0
   Node                  1032       0    -2.07500000000000E+1
-1.45000000000000E+0      0.00000000000000E+0
   Node                  1033       0    -2.15000000000000E+1
-1.45000000000000E+0      0.00000000000000E+0
   Node                  1034       0    -2.20000000000000E+1
-1.45000000000000E+0      0.00000000000000E+0
   Node                  1035       0    -2.25000000000000E+1
-1.45000000000000E+0      0.00000000000000E+0
   Node                  1036       0    -2.30000000000000E+1
-1.45000000000000E+0      0.00000000000000E+0
   Node                  1037       0    -2.35000000000000E+1
-1.45000000000000E+0      0.00000000000000E+0
   Node                  1038       0    -2.40000000000000E+1
-1.45000000000000E+0      0.00000000000000E+0
   Node                  1039       0    -2.45000000000000E+1
-1.45000000000000E+0      0.00000000000000E+0
   Node                  1040       0    -2.50000000000000E+1
-1.45000000000000E+0      0.00000000000000E+0
   Node                  1041       0    -2.55000000000000E+1
-1.45000000000000E+0      0.00000000000000E+0
   Node                  1042       0    -2.60000000000000E+1
-1.45000000000000E+0      0.00000000000000E+0
   Node                  1043       0    -2.65000000000000E+1
-1.45000000000000E+0      0.00000000000000E+0
   Node                  1044       0    -2.70000000000000E+1
-1.45000000000000E+0      0.00000000000000E+0
   Node                  1045       0    -2.75000000000000E+1
-1.45000000000000E+0      0.00000000000000E+0
   Node                  1046       0    -2.80000000000000E+1
-1.45000000000000E+0      0.00000000000000E+0

/ ____________________________________________________________________________
/ BEAM ELEMENTS

   Beam                     1       0       5       1     398     399
   Beam                     2       0       5       1     400     401
   Beam                     3       0       5       1     402     403
   Beam                     4       0       5       1     403     404
   Beam                     5       0       5       1     405     406
   Beam                     6       0       5       1     407     408
   Beam                     7       0       5       1     409     410
   Beam                     8       0       5       1     411     412
   Beam                     9       0       5       1     413     414
```

Beam	10	0	5	1	415	416
Beam	11	0	5	1	417	418
Beam	12	0	5	1	419	420
Beam	13	0	9	4	132	12
Beam	14	0	9	4	158	14
Beam	15	0	9	4	184	16
Beam	16	0	9	4	210	18
Beam	17	0	9	4	236	20
Beam	18	0	9	4	262	22
Beam	19	0	9	4	288	24
Beam	20	0	9	4	314	26
Beam	21	0	9	4	340	28
Beam	22	0	9	4	106	30
Beam	23	0	10	5	431	429
Beam	24	0	10	5	345	30
Beam	25	0	5	1	420	432
Beam	26	0	5	1	414	415
Beam	27	0	5	1	418	433
Beam	28	0	5	1	433	434
Beam	29	0	5	1	434	435
Beam	30	0	5	1	435	436
Beam	31	0	5	1	436	419
Beam	32	0	5	1	416	437
Beam	33	0	5	1	437	438
Beam	34	0	5	1	438	439
Beam	35	0	5	1	439	440
Beam	36	0	5	1	440	417
Beam	37	0	5	1	399	441
Beam	38	0	5	1	441	442
Beam	39	0	5	1	442	443
Beam	40	0	5	1	443	444
Beam	41	0	5	1	444	400
Beam	42	0	5	1	404	445
Beam	43	0	5	1	445	446
Beam	44	0	5	1	446	447
Beam	45	0	5	1	447	448
Beam	46	0	5	1	448	405
Beam	47	0	5	1	406	449
Beam	48	0	5	1	449	450
Beam	49	0	5	1	450	451
Beam	50	0	5	1	451	452
Beam	51	0	5	1	452	407
Beam	52	0	5	1	408	453
Beam	53	0	5	1	453	454
Beam	54	0	5	1	454	455
Beam	55	0	5	1	455	456
Beam	56	0	5	1	456	409
Beam	57	0	5	1	410	457
Beam	58	0	5	1	457	458
Beam	59	0	5	1	458	459
Beam	60	0	5	1	459	460
Beam	61	0	5	1	460	411
Beam	62	0	5	1	412	461
Beam	63	0	5	1	461	462

Beam	64	0	5	1	462	413
Beam	65	0	5	1	401	463
Beam	66	0	5	1	463	464
Beam	67	0	5	1	464	465
Beam	68	0	5	1	465	402
Beam	69	0	8	3	31	32
Beam	70	0	8	3	32	33
Beam	71	0	8	3	33	34
Beam	72	0	8	3	34	35
Beam	73	0	8	3	35	12
Beam	74	0	8	3	36	37
Beam	75	0	8	3	37	38
Beam	76	0	8	3	38	39
Beam	77	0	8	3	39	40
Beam	78	0	8	3	40	14
Beam	79	0	8	3	41	42
Beam	80	0	8	3	42	43
Beam	81	0	8	3	43	44
Beam	82	0	8	3	44	45
Beam	83	0	8	3	45	16
Beam	84	0	8	3	46	47
Beam	85	0	8	3	47	48
Beam	86	0	8	3	48	49
Beam	87	0	8	3	49	50
Beam	88	0	8	3	50	18
Beam	89	0	8	3	51	52
Beam	90	0	8	3	52	53
Beam	91	0	8	3	53	54
Beam	92	0	8	3	54	55
Beam	93	0	8	3	55	20
Beam	94	0	8	3	56	57
Beam	95	0	8	3	57	58
Beam	96	0	8	3	58	59
Beam	97	0	8	3	59	60
Beam	98	0	8	3	60	22
Beam	99	0	8	3	61	62
Beam	100	0	8	3	62	63
Beam	101	0	8	3	63	64
Beam	102	0	8	3	64	65
Beam	103	0	8	3	65	24
Beam	104	0	8	3	66	67
Beam	105	0	8	3	67	68
Beam	106	0	8	3	68	69
Beam	107	0	8	3	69	70
Beam	108	0	8	3	70	26
Beam	109	0	8	3	71	72
Beam	110	0	8	3	72	73
Beam	111	0	8	3	73	74
Beam	112	0	8	3	74	75
Beam	113	0	8	3	75	28
Beam	114	0	8	3	76	77
Beam	115	0	8	3	77	78
Beam	116	0	8	3	78	79
Beam	117	0	8	3	79	80

Beam	118	0	8	3	80	30
Beam	119	0	8	3	466	467
Beam	120	0	8	3	467	468
Beam	121	0	8	3	468	469
Beam	122	0	8	3	469	470
Beam	123	0	8	3	470	421
Beam	124	0	8	3	471	472
Beam	125	0	8	3	472	473
Beam	126	0	8	3	473	474
Beam	127	0	8	3	474	475
Beam	128	0	8	3	475	423
Beam	129	0	8	3	476	477
Beam	130	0	8	3	477	478
Beam	131	0	8	3	478	479
Beam	132	0	8	3	479	480
Beam	133	0	8	3	480	424
Beam	134	0	8	3	481	482
Beam	135	0	8	3	482	483
Beam	136	0	8	3	483	484
Beam	137	0	8	3	484	485
Beam	138	0	8	3	485	425
Beam	139	0	8	3	486	487
Beam	140	0	8	3	487	488
Beam	141	0	8	3	488	489
Beam	142	0	8	3	489	490
Beam	143	0	8	3	490	426
Beam	144	0	8	3	491	492
Beam	145	0	8	3	492	493
Beam	146	0	8	3	493	494
Beam	147	0	8	3	494	495
Beam	148	0	8	3	495	427
Beam	149	0	8	3	496	497
Beam	150	0	8	3	497	498
Beam	151	0	8	3	498	499
Beam	152	0	8	3	499	500
Beam	153	0	8	3	500	428
Beam	154	0	8	3	501	502
Beam	155	0	8	3	502	503
Beam	156	0	8	3	503	504
Beam	157	0	8	3	504	505
Beam	158	0	8	3	505	429
Beam	159	0	8	3	506	507
Beam	160	0	8	3	507	508
Beam	161	0	8	3	508	509
Beam	162	0	8	3	509	510
Beam	163	0	8	3	510	430
Beam	164	0	9	4	430	511
Beam	165	0	9	4	511	29
Beam	166	0	9	4	29	81
Beam	167	0	9	4	81	82
Beam	168	0	9	4	82	83
Beam	169	0	9	4	83	84
Beam	170	0	9	4	84	85
Beam	171	0	9	4	85	86

Beam	172	0	9	4	86	87
Beam	173	0	9	4	87	88
Beam	174	0	9	4	88	89
Beam	175	0	9	4	89	90
Beam	176	0	9	4	90	91
Beam	177	0	9	4	91	92
Beam	178	0	9	4	92	93
Beam	179	0	9	4	93	94
Beam	180	0	9	4	95	96
Beam	181	0	9	4	96	97
Beam	182	0	9	4	97	98
Beam	183	0	9	4	98	99
Beam	184	0	9	4	99	100
Beam	185	0	9	4	100	101
Beam	186	0	9	4	101	102
Beam	187	0	9	4	102	103
Beam	188	0	9	4	103	104
Beam	189	0	9	4	104	105
Beam	190	0	9	4	105	106
Beam	191	0	9	4	421	512
Beam	192	0	9	4	512	11
Beam	193	0	9	4	11	107
Beam	194	0	9	4	107	108
Beam	195	0	9	4	108	109
Beam	196	0	9	4	109	110
Beam	197	0	9	4	110	111
Beam	198	0	9	4	111	112
Beam	199	0	9	4	112	113
Beam	200	0	9	4	113	114
Beam	201	0	9	4	114	115
Beam	202	0	9	4	115	116
Beam	203	0	9	4	116	117
Beam	204	0	9	4	117	118
Beam	205	0	9	4	118	119
Beam	206	0	9	4	119	120
Beam	207	0	9	4	121	122
Beam	208	0	9	4	122	123
Beam	209	0	9	4	123	124
Beam	210	0	9	4	124	125
Beam	211	0	9	4	125	126
Beam	212	0	9	4	126	127
Beam	213	0	9	4	127	128
Beam	214	0	9	4	128	129
Beam	215	0	9	4	129	130
Beam	216	0	9	4	130	131
Beam	217	0	9	4	131	132
Beam	218	0	9	4	422	513
Beam	219	0	9	4	513	13
Beam	220	0	9	4	13	133
Beam	221	0	9	4	133	134
Beam	222	0	9	4	134	135
Beam	223	0	9	4	135	136
Beam	224	0	9	4	136	137
Beam	225	0	9	4	137	138

Beam	226	0	9	4	138	139
Beam	227	0	9	4	139	140
Beam	228	0	9	4	140	141
Beam	229	0	9	4	141	142
Beam	230	0	9	4	142	143
Beam	231	0	9	4	143	144
Beam	232	0	9	4	144	145
Beam	233	0	9	4	145	146
Beam	234	0	9	4	147	148
Beam	235	0	9	4	148	149
Beam	236	0	9	4	149	150
Beam	237	0	9	4	150	151
Beam	238	0	9	4	151	152
Beam	239	0	9	4	152	153
Beam	240	0	9	4	153	154
Beam	241	0	9	4	154	155
Beam	242	0	9	4	155	156
Beam	243	0	9	4	156	157
Beam	244	0	9	4	157	158
Beam	245	0	9	4	423	514
Beam	246	0	9	4	514	15
Beam	247	0	9	4	15	159
Beam	248	0	9	4	159	160
Beam	249	0	9	4	160	161
Beam	250	0	9	4	161	162
Beam	251	0	9	4	162	163
Beam	252	0	9	4	163	164
Beam	253	0	9	4	164	165
Beam	254	0	9	4	165	166
Beam	255	0	9	4	166	167
Beam	256	0	9	4	167	168
Beam	257	0	9	4	168	169
Beam	258	0	9	4	169	170
Beam	259	0	9	4	170	171
Beam	260	0	9	4	171	172
Beam	261	0	9	4	173	174
Beam	262	0	9	4	174	175
Beam	263	0	9	4	175	176
Beam	264	0	9	4	176	177
Beam	265	0	9	4	177	178
Beam	266	0	9	4	178	179
Beam	267	0	9	4	179	180
Beam	268	0	9	4	180	181
Beam	269	0	9	4	181	182
Beam	270	0	9	4	182	183
Beam	271	0	9	4	183	184
Beam	272	0	9	4	424	515
Beam	273	0	9	4	515	17
Beam	274	0	9	4	17	185
Beam	275	0	9	4	185	186
Beam	276	0	9	4	186	187
Beam	277	0	9	4	187	188
Beam	278	0	9	4	188	189
Beam	279	0	9	4	189	190

Beam	280	0	9	4	190	191
Beam	281	0	9	4	191	192
Beam	282	0	9	4	192	193
Beam	283	0	9	4	193	194
Beam	284	0	9	4	194	195
Beam	285	0	9	4	195	196
Beam	286	0	9	4	196	197
Beam	287	0	9	4	197	198
Beam	288	0	9	4	199	200
Beam	289	0	9	4	200	201
Beam	290	0	9	4	201	202
Beam	291	0	9	4	202	203
Beam	292	0	9	4	203	204
Beam	293	0	9	4	204	205
Beam	294	0	9	4	205	206
Beam	295	0	9	4	206	207
Beam	296	0	9	4	207	208
Beam	297	0	9	4	208	209
Beam	298	0	9	4	209	210
Beam	299	0	9	4	425	516
Beam	300	0	9	4	516	19
Beam	301	0	9	4	19	211
Beam	302	0	9	4	211	212
Beam	303	0	9	4	212	213
Beam	304	0	9	4	213	214
Beam	305	0	9	4	214	215
Beam	306	0	9	4	215	216
Beam	307	0	9	4	216	217
Beam	308	0	9	4	217	218
Beam	309	0	9	4	218	219
Beam	310	0	9	4	219	220
Beam	311	0	9	4	220	221
Beam	312	0	9	4	221	222
Beam	313	0	9	4	222	223
Beam	314	0	9	4	223	224
Beam	315	0	9	4	225	226
Beam	316	0	9	4	226	227
Beam	317	0	9	4	227	228
Beam	318	0	9	4	228	229
Beam	319	0	9	4	229	230
Beam	320	0	9	4	230	231
Beam	321	0	9	4	231	232
Beam	322	0	9	4	232	233
Beam	323	0	9	4	233	234
Beam	324	0	9	4	234	235
Beam	325	0	9	4	235	236
Beam	326	0	9	4	426	517
Beam	327	0	9	4	517	21
Beam	328	0	9	4	21	237
Beam	329	0	9	4	237	238
Beam	330	0	9	4	238	239
Beam	331	0	9	4	239	240
Beam	332	0	9	4	240	241
Beam	333	0	9	4	241	242

Beam	334	0	9	4	242	243
Beam	335	0	9	4	243	244
Beam	336	0	9	4	244	245
Beam	337	0	9	4	245	246
Beam	338	0	9	4	246	247
Beam	339	0	9	4	247	248
Beam	340	0	9	4	248	249
Beam	341	0	9	4	249	250
Beam	342	0	9	4	251	252
Beam	343	0	9	4	252	253
Beam	344	0	9	4	253	254
Beam	345	0	9	4	254	255
Beam	346	0	9	4	255	256
Beam	347	0	9	4	256	257
Beam	348	0	9	4	257	258
Beam	349	0	9	4	258	259
Beam	350	0	9	4	259	260
Beam	351	0	9	4	260	261
Beam	352	0	9	4	261	262
Beam	353	0	9	4	427	518
Beam	354	0	9	4	518	23
Beam	355	0	9	4	23	263
Beam	356	0	9	4	263	264
Beam	357	0	9	4	264	265
Beam	358	0	9	4	265	266
Beam	359	0	9	4	266	267
Beam	360	0	9	4	267	268
Beam	361	0	9	4	268	269
Beam	362	0	9	4	269	270
Beam	363	0	9	4	270	271
Beam	364	0	9	4	271	272
Beam	365	0	9	4	272	273
Beam	366	0	9	4	273	274
Beam	367	0	9	4	274	275
Beam	368	0	9	4	275	276
Beam	369	0	9	4	277	278
Beam	370	0	9	4	278	279
Beam	371	0	9	4	279	280
Beam	372	0	9	4	280	281
Beam	373	0	9	4	281	282
Beam	374	0	9	4	282	283
Beam	375	0	9	4	283	284
Beam	376	0	9	4	284	285
Beam	377	0	9	4	285	286
Beam	378	0	9	4	286	287
Beam	379	0	9	4	287	288
Beam	380	0	9	4	428	519
Beam	381	0	9	4	519	25
Beam	382	0	9	4	25	289
Beam	383	0	9	4	289	290
Beam	384	0	9	4	290	291
Beam	385	0	9	4	291	292
Beam	386	0	9	4	292	293
Beam	387	0	9	4	293	294

Beam	388	0	9	4	294	295
Beam	389	0	9	4	295	296
Beam	390	0	9	4	296	297
Beam	391	0	9	4	297	298
Beam	392	0	9	4	298	299
Beam	393	0	9	4	299	300
Beam	394	0	9	4	300	301
Beam	395	0	9	4	301	302
Beam	396	0	9	4	303	304
Beam	397	0	9	4	304	305
Beam	398	0	9	4	305	306
Beam	399	0	9	4	306	307
Beam	400	0	9	4	307	308
Beam	401	0	9	4	308	309
Beam	402	0	9	4	309	310
Beam	403	0	9	4	310	311
Beam	404	0	9	4	311	312
Beam	405	0	9	4	312	313
Beam	406	0	9	4	313	314
Beam	407	0	9	4	429	520
Beam	408	0	9	4	520	27
Beam	409	0	9	4	27	315
Beam	410	0	9	4	315	316
Beam	411	0	9	4	316	317
Beam	412	0	9	4	317	318
Beam	413	0	9	4	318	319
Beam	414	0	9	4	319	320
Beam	415	0	9	4	320	321
Beam	416	0	9	4	321	322
Beam	417	0	9	4	322	323
Beam	418	0	9	4	323	324
Beam	419	0	9	4	324	325
Beam	420	0	9	4	325	326
Beam	421	0	9	4	326	327
Beam	422	0	9	4	327	328
Beam	423	0	9	4	329	330
Beam	424	0	9	4	330	331
Beam	425	0	9	4	331	332
Beam	426	0	9	4	332	333
Beam	427	0	9	4	333	334
Beam	428	0	9	4	334	335
Beam	429	0	9	4	335	336
Beam	430	0	9	4	336	337
Beam	431	0	9	4	337	338
Beam	432	0	9	4	338	339
Beam	433	0	9	4	339	340
Beam	434	0	8	3	521	522
Beam	435	0	8	3	522	523
Beam	436	0	8	3	523	524
Beam	437	0	8	3	524	525
Beam	438	0	8	3	525	422
Beam	439	0	10	5	430	526
Beam	440	0	10	5	526	527
Beam	441	0	10	5	527	528

Beam	442	0	10	5	528	529
Beam	443	0	10	5	529	431
Beam	444	0	10	5	28	341
Beam	445	0	10	5	341	342
Beam	446	0	10	5	342	343
Beam	447	0	10	5	343	344
Beam	448	0	10	5	344	345
Beam	449	0	6	1	602	603
Beam	450	0	6	1	605	606
Beam	451	0	6	1	613	614
Beam	452	0	6	1	614	615
Beam	453	0	6	1	620	621
Beam	454	0	6	1	626	627
Beam	455	0	6	1	632	633
Beam	456	0	6	1	638	639
Beam	457	0	6	1	644	645
Beam	458	0	6	1	650	651
Beam	459	0	6	1	656	657
Beam	460	0	6	1	657	658
Beam	461	0	6	1	643	644
Beam	462	0	6	1	651	652
Beam	463	0	6	1	652	653
Beam	464	0	6	1	653	654
Beam	465	0	6	1	654	655
Beam	466	0	6	1	655	656
Beam	467	0	6	1	645	646
Beam	468	0	6	1	646	647
Beam	469	0	6	1	647	648
Beam	470	0	6	1	648	649
Beam	471	0	6	1	649	650
Beam	472	0	6	1	603	604
Beam	473	0	6	1	604	609
Beam	474	0	6	1	609	608
Beam	475	0	6	1	608	607
Beam	476	0	6	1	607	605
Beam	477	0	6	1	615	616
Beam	478	0	6	1	616	617
Beam	479	0	6	1	617	618
Beam	480	0	6	1	618	619
Beam	481	0	6	1	619	620
Beam	482	0	6	1	621	622
Beam	483	0	6	1	622	623
Beam	484	0	6	1	623	624
Beam	485	0	6	1	624	625
Beam	486	0	6	1	625	626
Beam	487	0	6	1	627	628
Beam	488	0	6	1	628	629
Beam	489	0	6	1	629	630
Beam	490	0	6	1	630	631
Beam	491	0	6	1	631	632
Beam	492	0	6	1	633	634
Beam	493	0	6	1	634	635
Beam	494	0	6	1	635	636
Beam	495	0	6	1	636	637

Beam	496	0	6	1	637	638
Beam	497	0	6	1	639	640
Beam	498	0	6	1	640	641
Beam	499	0	6	1	606	610
Beam	500	0	6	1	610	611
Beam	501	0	6	1	611	612
Beam	502	0	6	1	612	613
Beam	503	0	3	1	1	346
Beam	504	0	3	1	2	347
Beam	505	0	3	1	349	348
Beam	506	0	3	1	3	349
Beam	507	0	3	1	4	350
Beam	508	0	3	1	5	351
Beam	509	0	3	1	6	352
Beam	510	0	3	1	7	353
Beam	511	0	3	1	355	354
Beam	512	0	3	1	8	356
Beam	513	0	3	1	9	357
Beam	514	0	3	1	10	358
Beam	515	0	3	1	359	10
Beam	516	0	3	1	356	355
Beam	517	0	3	1	360	9
Beam	518	0	3	1	361	360
Beam	519	0	3	1	362	361
Beam	520	0	3	1	363	362
Beam	521	0	3	1	358	363
Beam	522	0	3	1	364	8
Beam	523	0	3	1	365	364
Beam	524	0	3	1	366	365
Beam	525	0	3	1	367	366
Beam	526	0	3	1	357	367
Beam	527	0	3	1	368	1
Beam	528	0	3	1	369	368
Beam	529	0	3	1	370	369
Beam	530	0	3	1	371	370
Beam	531	0	3	1	347	371
Beam	532	0	3	1	372	3
Beam	533	0	3	1	373	372
Beam	534	0	3	1	374	373
Beam	535	0	3	1	375	374
Beam	536	0	3	1	350	375
Beam	537	0	3	1	376	4
Beam	538	0	3	1	377	376
Beam	539	0	3	1	378	377
Beam	540	0	3	1	379	378
Beam	541	0	3	1	351	379
Beam	542	0	3	1	380	5
Beam	543	0	3	1	381	380
Beam	544	0	3	1	382	381
Beam	545	0	3	1	383	382
Beam	546	0	3	1	352	383
Beam	547	0	3	1	384	6
Beam	548	0	3	1	385	384
Beam	549	0	3	1	386	385

Beam	550	0	3	1	387	386
Beam	551	0	3	1	353	387
Beam	552	0	3	1	388	7
Beam	553	0	3	1	389	388
Beam	554	0	3	1	354	389
Beam	555	0	3	1	390	2
Beam	556	0	3	1	391	390
Beam	557	0	3	1	392	391
Beam	558	0	3	1	348	392
Beam	559	0	4	1	545	546
Beam	560	0	4	1	547	548
Beam	561	0	4	1	549	550
Beam	562	0	4	1	551	549
Beam	563	0	4	1	552	553
Beam	564	0	4	1	554	555
Beam	565	0	4	1	556	557
Beam	566	0	4	1	558	559
Beam	567	0	4	1	560	561
Beam	568	0	4	1	562	563
Beam	569	0	4	1	564	565
Beam	570	0	4	1	566	567
Beam	571	0	4	1	568	566
Beam	572	0	4	1	563	560
Beam	573	0	4	1	569	564
Beam	574	0	4	1	570	569
Beam	575	0	4	1	571	570
Beam	576	0	4	1	572	571
Beam	577	0	4	1	567	572
Beam	578	0	4	1	573	562
Beam	579	0	4	1	574	573
Beam	580	0	4	1	575	574
Beam	581	0	4	1	576	575
Beam	582	0	4	1	565	576
Beam	583	0	4	1	577	545
Beam	584	0	4	1	578	577
Beam	585	0	4	1	579	578
Beam	586	0	4	1	580	579
Beam	587	0	4	1	548	580
Beam	588	0	4	1	581	551
Beam	589	0	4	1	582	581
Beam	590	0	4	1	583	582
Beam	591	0	4	1	584	583
Beam	592	0	4	1	553	584
Beam	593	0	4	1	585	552
Beam	594	0	4	1	586	585
Beam	595	0	4	1	587	586
Beam	596	0	4	1	588	587
Beam	597	0	4	1	555	588
Beam	598	0	4	1	589	554
Beam	599	0	4	1	590	589
Beam	600	0	4	1	591	590
Beam	601	0	4	1	592	591
Beam	602	0	4	1	557	592
Beam	603	0	4	1	593	556

Beam	604	0	4	1	594	593
Beam	605	0	4	1	595	594
Beam	606	0	4	1	596	595
Beam	607	0	4	1	559	596
Beam	608	0	4	1	597	558
Beam	609	0	4	1	598	597
Beam	610	0	4	1	561	598
Beam	611	0	4	1	599	547
Beam	612	0	4	1	600	599
Beam	613	0	4	1	601	600
Beam	614	0	4	1	550	601
Beam	615	0	7	2	420	657
Beam	616	0	7	2	566	10
Beam	617	0	7	2	418	651
Beam	618	0	7	2	416	645
Beam	619	0	7	2	412	639
Beam	620	0	7	2	410	633
Beam	621	0	7	2	408	627
Beam	622	0	7	2	406	621
Beam	623	0	7	2	404	615
Beam	624	0	7	2	401	606
Beam	625	0	7	2	399	603
Beam	626	0	7	2	564	9
Beam	627	0	7	2	562	8
Beam	628	0	7	2	558	7
Beam	629	0	7	2	556	6
Beam	630	0	7	2	554	5
Beam	631	0	7	2	552	4
Beam	632	0	7	2	551	3
Beam	633	0	7	2	547	2
Beam	634	0	7	2	545	1
Beam	635	0	6	1	642	643
Beam	636	0	6	1	641	642
Beam	637	0	10	5	530	318
Beam	638	0	10	5	84	531
Beam	639	0	10	5	531	532
Beam	640	0	10	5	532	533
Beam	641	0	10	5	533	534
Beam	642	0	10	5	534	530
Beam	643	0	10	5	393	101
Beam	644	0	10	5	335	394
Beam	645	0	10	5	394	395
Beam	646	0	10	5	395	396
Beam	647	0	10	5	396	397
Beam	648	0	10	5	397	393
Beam	649	0	9	4	535	95
Beam	650	0	9	4	94	535
Beam	651	0	9	4	536	121
Beam	652	0	9	4	120	536
Beam	653	0	9	4	537	147
Beam	654	0	9	4	146	537
Beam	655	0	9	4	538	173
Beam	656	0	9	4	172	538
Beam	657	0	9	4	539	199

Beam	658	0	9	4	198	539
Beam	659	0	9	4	540	225
Beam	660	0	9	4	224	540
Beam	661	0	9	4	541	251
Beam	662	0	9	4	250	541
Beam	663	0	9	4	542	277
Beam	664	0	9	4	276	542
Beam	665	0	9	4	543	303
Beam	666	0	9	4	302	543
Beam	667	0	9	4	544	329
Beam	668	0	9	4	328	544
Beam	669	0	10	5	659	428
Beam	670	0	10	5	660	427
Beam	671	0	10	5	661	426
Beam	672	0	10	5	662	425
Beam	673	0	10	5	663	424
Beam	674	0	10	5	664	423
Beam	675	0	10	5	665	422
Beam	676	0	10	5	666	421
Beam	677	0	10	5	667	28
Beam	678	0	10	5	668	26
Beam	679	0	10	5	669	24
Beam	680	0	10	5	670	22
Beam	681	0	10	5	671	20
Beam	682	0	10	5	672	18
Beam	683	0	10	5	673	16
Beam	684	0	10	5	674	14
Beam	685	0	10	5	429	675
Beam	686	0	10	5	428	676
Beam	687	0	10	5	427	677
Beam	688	0	10	5	426	678
Beam	689	0	10	5	425	679
Beam	690	0	10	5	424	680
Beam	691	0	10	5	423	681
Beam	692	0	10	5	422	682
Beam	693	0	10	5	675	683
Beam	694	0	10	5	676	684
Beam	695	0	10	5	677	685
Beam	696	0	10	5	678	686
Beam	697	0	10	5	679	687
Beam	698	0	10	5	680	688
Beam	699	0	10	5	681	689
Beam	700	0	10	5	682	690
Beam	701	0	10	5	683	691
Beam	702	0	10	5	684	692
Beam	703	0	10	5	685	693
Beam	704	0	10	5	686	694
Beam	705	0	10	5	687	695
Beam	706	0	10	5	688	696
Beam	707	0	10	5	689	697
Beam	708	0	10	5	690	698
Beam	709	0	10	5	691	699
Beam	710	0	10	5	692	700
Beam	711	0	10	5	693	701

Beam	712	0	10	5	694	702
Beam	713	0	10	5	695	703
Beam	714	0	10	5	696	704
Beam	715	0	10	5	697	705
Beam	716	0	10	5	698	706
Beam	717	0	10	5	699	659
Beam	718	0	10	5	700	660
Beam	719	0	10	5	701	661
Beam	720	0	10	5	702	662
Beam	721	0	10	5	703	663
Beam	722	0	10	5	704	664
Beam	723	0	10	5	705	665
Beam	724	0	10	5	706	666
Beam	725	0	10	5	26	707
Beam	726	0	10	5	24	708
Beam	727	0	10	5	22	709
Beam	728	0	10	5	20	710
Beam	729	0	10	5	18	711
Beam	730	0	10	5	16	712
Beam	731	0	10	5	14	713
Beam	732	0	10	5	12	714
Beam	733	0	10	5	707	715
Beam	734	0	10	5	708	716
Beam	735	0	10	5	709	717
Beam	736	0	10	5	710	718
Beam	737	0	10	5	711	719
Beam	738	0	10	5	712	720
Beam	739	0	10	5	713	721
Beam	740	0	10	5	714	722
Beam	741	0	10	5	715	723
Beam	742	0	10	5	716	724
Beam	743	0	10	5	717	725
Beam	744	0	10	5	718	726
Beam	745	0	10	5	719	727
Beam	746	0	10	5	720	728
Beam	747	0	10	5	721	729
Beam	748	0	10	5	722	730
Beam	749	0	10	5	723	731
Beam	750	0	10	5	724	732
Beam	751	0	10	5	725	733
Beam	752	0	10	5	726	734
Beam	753	0	10	5	727	735
Beam	754	0	10	5	728	736
Beam	755	0	10	5	729	737
Beam	756	0	10	5	730	738
Beam	757	0	10	5	731	667
Beam	758	0	10	5	732	668
Beam	759	0	10	5	733	669
Beam	760	0	10	5	734	670
Beam	761	0	10	5	735	671
Beam	762	0	10	5	736	672
Beam	763	0	10	5	737	673
Beam	764	0	10	5	738	674
Beam	765	0	10	5	739	292

Beam	766	0	10	5	740	266
Beam	767	0	10	5	741	240
Beam	768	0	10	5	742	214
Beam	769	0	10	5	743	188
Beam	770	0	10	5	744	162
Beam	771	0	10	5	745	136
Beam	772	0	10	5	746	110
Beam	773	0	10	5	318	747
Beam	774	0	10	5	292	748
Beam	775	0	10	5	266	749
Beam	776	0	10	5	240	750
Beam	777	0	10	5	214	751
Beam	778	0	10	5	188	752
Beam	779	0	10	5	162	753
Beam	780	0	10	5	136	754
Beam	781	0	10	5	747	755
Beam	782	0	10	5	748	756
Beam	783	0	10	5	749	757
Beam	784	0	10	5	750	758
Beam	785	0	10	5	751	759
Beam	786	0	10	5	752	760
Beam	787	0	10	5	753	761
Beam	788	0	10	5	754	762
Beam	789	0	10	5	755	763
Beam	790	0	10	5	756	764
Beam	791	0	10	5	757	765
Beam	792	0	10	5	758	766
Beam	793	0	10	5	759	767
Beam	794	0	10	5	760	768
Beam	795	0	10	5	761	769
Beam	796	0	10	5	762	770
Beam	797	0	10	5	763	771
Beam	798	0	10	5	764	772
Beam	799	0	10	5	765	773
Beam	800	0	10	5	766	774
Beam	801	0	10	5	767	775
Beam	802	0	10	5	768	776
Beam	803	0	10	5	769	777
Beam	804	0	10	5	770	778
Beam	805	0	10	5	771	739
Beam	806	0	10	5	772	740
Beam	807	0	10	5	773	741
Beam	808	0	10	5	774	742
Beam	809	0	10	5	775	743
Beam	810	0	10	5	776	744
Beam	811	0	10	5	777	745
Beam	812	0	10	5	778	746
Beam	813	0	10	5	779	335
Beam	814	0	10	5	780	309
Beam	815	0	10	5	781	283
Beam	816	0	10	5	782	257
Beam	817	0	10	5	783	231
Beam	818	0	10	5	784	205
Beam	819	0	10	5	785	179

Beam	820	0	10	5	786	153
Beam	821	0	10	5	309	787
Beam	822	0	10	5	283	788
Beam	823	0	10	5	257	789
Beam	824	0	10	5	231	790
Beam	825	0	10	5	205	791
Beam	826	0	10	5	179	792
Beam	827	0	10	5	153	793
Beam	828	0	10	5	127	794
Beam	829	0	10	5	787	795
Beam	830	0	10	5	788	796
Beam	831	0	10	5	789	797
Beam	832	0	10	5	790	798
Beam	833	0	10	5	791	799
Beam	834	0	10	5	792	800
Beam	835	0	10	5	793	801
Beam	836	0	10	5	794	802
Beam	837	0	10	5	795	803
Beam	838	0	10	5	796	804
Beam	839	0	10	5	797	805
Beam	840	0	10	5	798	806
Beam	841	0	10	5	799	807
Beam	842	0	10	5	800	808
Beam	843	0	10	5	801	809
Beam	844	0	10	5	802	810
Beam	845	0	10	5	803	811
Beam	846	0	10	5	804	812
Beam	847	0	10	5	805	813
Beam	848	0	10	5	806	814
Beam	849	0	10	5	807	815
Beam	850	0	10	5	808	816
Beam	851	0	10	5	809	817
Beam	852	0	10	5	810	818
Beam	853	0	10	5	811	779
Beam	854	0	10	5	812	780
Beam	855	0	10	5	813	781
Beam	856	0	10	5	814	782
Beam	857	0	10	5	815	783
Beam	858	0	10	5	816	784
Beam	859	0	10	5	817	785
Beam	860	0	10	5	818	786
Beam	861	0	17	9	430	318
Beam	862	0	17	9	84	429
Beam	863	0	17	9	101	28
Beam	864	0	17	9	30	335
Beam	865	0	17	9	429	292
Beam	866	0	17	9	428	266
Beam	867	0	17	9	427	240
Beam	868	0	17	9	426	214
Beam	869	0	17	9	425	188
Beam	870	0	17	9	424	162
Beam	871	0	17	9	423	136
Beam	872	0	17	9	422	110
Beam	873	0	17	9	318	428

```
   Beam                    874       0      17       9     292     427
   Beam                    875       0      17       9     266     426
   Beam                    876       0      17       9     240     425
   Beam                    877       0      17       9     214     424
   Beam                    878       0      17       9     188     423
   Beam                    879       0      17       9     162     422
   Beam                    880       0      17       9     136     421
   Beam                    881       0      17       9     335      26
   Beam                    882       0      17       9     309      24
   Beam                    883       0      17       9     283      22
   Beam                    884       0      17       9     257      20
   Beam                    885       0      17       9     231      18
   Beam                    886       0      17       9     205      16
   Beam                    887       0      17       9     179      14
   Beam                    888       0      17       9     153      12
   Beam                    889       0      17       9      28     309
   Beam                    890       0      17       9      26     283
   Beam                    891       0      17       9      24     257
   Beam                    892       0      17       9      22     231
   Beam                    893       0      17       9      20     205
   Beam                    894       0      17       9      18     179
   Beam                    895       0      17       9      16     153
   Beam                    896       0      17       9      14     127

/ ____________________________________________________________________________
/ BEAM ANGLES

   BmAngle                   1     9.00000000000000E+1
   BmAngle                   2     9.00000000000000E+1
   BmAngle                   3     9.00000000000000E+1
   BmAngle                   4     9.00000000000000E+1
   BmAngle                   5     9.00000000000000E+1
   BmAngle                   6     9.00000000000000E+1
   BmAngle                   7     9.00000000000000E+1
   BmAngle                   8     9.00000000000000E+1
   BmAngle                   9     9.00000000000000E+1
   BmAngle                  10     9.00000000000000E+1
   BmAngle                  11     9.00000000000000E+1
   BmAngle                  12     9.00000000000000E+1
   BmAngle                  13     9.00000000000000E+1
   BmAngle                  14     9.00000000000000E+1
   BmAngle                  15     9.00000000000000E+1
   BmAngle                  16     9.00000000000000E+1
   BmAngle                  17     9.00000000000000E+1
   BmAngle                  18     9.00000000000000E+1
   BmAngle                  19     9.00000000000000E+1
   BmAngle                  20     9.00000000000000E+1
   BmAngle                  21     9.00000000000000E+1
   BmAngle                  22     9.00000000000000E+1
   BmAngle                  23     9.00000000000000E+1
   BmAngle                  24     9.00000000000000E+1
   BmAngle                  25     9.00000000000000E+1
   BmAngle                  26     9.00000000000000E+1
   BmAngle                  27     9.00000000000000E+1
```

BmAngle	28	9.00000000000000E+1
BmAngle	29	9.00000000000000E+1
BmAngle	30	9.00000000000000E+1
BmAngle	31	9.00000000000000E+1
BmAngle	32	9.00000000000000E+1
BmAngle	33	9.00000000000000E+1
BmAngle	34	9.00000000000000E+1
BmAngle	35	9.00000000000000E+1
BmAngle	36	9.00000000000000E+1
BmAngle	37	9.00000000000000E+1
BmAngle	38	9.00000000000000E+1
BmAngle	39	9.00000000000000E+1
BmAngle	40	9.00000000000000E+1
BmAngle	41	9.00000000000000E+1
BmAngle	42	9.00000000000000E+1
BmAngle	43	9.00000000000000E+1
BmAngle	44	9.00000000000000E+1
BmAngle	45	9.00000000000000E+1
BmAngle	46	9.00000000000000E+1
BmAngle	47	9.00000000000000E+1
BmAngle	48	9.00000000000000E+1
BmAngle	49	9.00000000000000E+1
BmAngle	50	9.00000000000000E+1
BmAngle	51	9.00000000000000E+1
BmAngle	52	9.00000000000000E+1
BmAngle	53	9.00000000000000E+1
BmAngle	54	9.00000000000000E+1
BmAngle	55	9.00000000000000E+1
BmAngle	56	9.00000000000000E+1
BmAngle	57	9.00000000000000E+1
BmAngle	58	9.00000000000000E+1
BmAngle	59	9.00000000000000E+1
BmAngle	60	9.00000000000000E+1
BmAngle	61	9.00000000000000E+1
BmAngle	62	9.00000000000000E+1
BmAngle	63	9.00000000000000E+1
BmAngle	64	9.00000000000000E+1
BmAngle	65	9.00000000000000E+1
BmAngle	66	9.00000000000000E+1
BmAngle	67	9.00000000000000E+1
BmAngle	68	9.00000000000000E+1
BmAngle	164	9.00000000000000E+1
BmAngle	165	9.00000000000000E+1
BmAngle	166	9.00000000000000E+1
BmAngle	167	9.00000000000000E+1
BmAngle	168	9.00000000000000E+1
BmAngle	169	9.00000000000000E+1
BmAngle	170	9.00000000000000E+1
BmAngle	171	9.00000000000000E+1
BmAngle	172	9.00000000000000E+1
BmAngle	173	9.00000000000000E+1
BmAngle	174	9.00000000000000E+1
BmAngle	175	9.00000000000000E+1
BmAngle	176	9.00000000000000E+1

BmAngle	177	9.00000000000000E+1
BmAngle	178	9.00000000000000E+1
BmAngle	179	9.00000000000000E+1
BmAngle	180	9.00000000000000E+1
BmAngle	181	9.00000000000000E+1
BmAngle	182	9.00000000000000E+1
BmAngle	183	9.00000000000000E+1
BmAngle	184	9.00000000000000E+1
BmAngle	185	9.00000000000000E+1
BmAngle	186	9.00000000000000E+1
BmAngle	187	9.00000000000000E+1
BmAngle	188	9.00000000000000E+1
BmAngle	189	9.00000000000000E+1
BmAngle	190	9.00000000000000E+1
BmAngle	191	9.00000000000000E+1
BmAngle	192	9.00000000000000E+1
BmAngle	193	9.00000000000000E+1
BmAngle	194	9.00000000000000E+1
BmAngle	195	9.00000000000000E+1
BmAngle	196	9.00000000000000E+1
BmAngle	197	9.00000000000000E+1
BmAngle	198	9.00000000000000E+1
BmAngle	199	9.00000000000000E+1
BmAngle	200	9.00000000000000E+1
BmAngle	201	9.00000000000000E+1
BmAngle	202	9.00000000000000E+1
BmAngle	203	9.00000000000000E+1
BmAngle	204	9.00000000000000E+1
BmAngle	205	9.00000000000000E+1
BmAngle	206	9.00000000000000E+1
BmAngle	207	9.00000000000000E+1
BmAngle	208	9.00000000000000E+1
BmAngle	209	9.00000000000000E+1
BmAngle	210	9.00000000000000E+1
BmAngle	211	9.00000000000000E+1
BmAngle	212	9.00000000000000E+1
BmAngle	213	9.00000000000000E+1
BmAngle	214	9.00000000000000E+1
BmAngle	215	9.00000000000000E+1
BmAngle	216	9.00000000000000E+1
BmAngle	217	9.00000000000000E+1
BmAngle	218	9.00000000000000E+1
BmAngle	219	9.00000000000000E+1
BmAngle	220	9.00000000000000E+1
BmAngle	221	9.00000000000000E+1
BmAngle	222	9.00000000000000E+1
BmAngle	223	9.00000000000000E+1
BmAngle	224	9.00000000000000E+1
BmAngle	225	9.00000000000000E+1
BmAngle	226	9.00000000000000E+1
BmAngle	227	9.00000000000000E+1
BmAngle	228	9.00000000000000E+1
BmAngle	229	9.00000000000000E+1
BmAngle	230	9.00000000000000E+1

BmAngle	231	9.00000000000000E+1
BmAngle	232	9.00000000000000E+1
BmAngle	233	9.00000000000000E+1
BmAngle	234	9.00000000000000E+1
BmAngle	235	9.00000000000000E+1
BmAngle	236	9.00000000000000E+1
BmAngle	237	9.00000000000000E+1
BmAngle	238	9.00000000000000E+1
BmAngle	239	9.00000000000000E+1
BmAngle	240	9.00000000000000E+1
BmAngle	241	9.00000000000000E+1
BmAngle	242	9.00000000000000E+1
BmAngle	243	9.00000000000000E+1
BmAngle	244	9.00000000000000E+1
BmAngle	245	9.00000000000000E+1
BmAngle	246	9.00000000000000E+1
BmAngle	247	9.00000000000000E+1
BmAngle	248	9.00000000000000E+1
BmAngle	249	9.00000000000000E+1
BmAngle	250	9.00000000000000E+1
BmAngle	251	9.00000000000000E+1
BmAngle	252	9.00000000000000E+1
BmAngle	253	9.00000000000000E+1
BmAngle	254	9.00000000000000E+1
BmAngle	255	9.00000000000000E+1
BmAngle	256	9.00000000000000E+1
BmAngle	257	9.00000000000000E+1
BmAngle	258	9.00000000000000E+1
BmAngle	259	9.00000000000000E+1
BmAngle	260	9.00000000000000E+1
BmAngle	261	9.00000000000000E+1
BmAngle	262	9.00000000000000E+1
BmAngle	263	9.00000000000000E+1
BmAngle	264	9.00000000000000E+1
BmAngle	265	9.00000000000000E+1
BmAngle	266	9.00000000000000E+1
BmAngle	267	9.00000000000000E+1
BmAngle	268	9.00000000000000E+1
BmAngle	269	9.00000000000000E+1
BmAngle	270	9.00000000000000E+1
BmAngle	271	9.00000000000000E+1
BmAngle	272	9.00000000000000E+1
BmAngle	273	9.00000000000000E+1
BmAngle	274	9.00000000000000E+1
BmAngle	275	9.00000000000000E+1
BmAngle	276	9.00000000000000E+1
BmAngle	277	9.00000000000000E+1
BmAngle	278	9.00000000000000E+1
BmAngle	279	9.00000000000000E+1
BmAngle	280	9.00000000000000E+1
BmAngle	281	9.00000000000000E+1
BmAngle	282	9.00000000000000E+1
BmAngle	283	9.00000000000000E+1
BmAngle	284	9.00000000000000E+1

BmAngle	285	9.00000000000000E+1
BmAngle	286	9.00000000000000E+1
BmAngle	287	9.00000000000000E+1
BmAngle	288	9.00000000000000E+1
BmAngle	289	9.00000000000000E+1
BmAngle	290	9.00000000000000E+1
BmAngle	291	9.00000000000000E+1
BmAngle	292	9.00000000000000E+1
BmAngle	293	9.00000000000000E+1
BmAngle	294	9.00000000000000E+1
BmAngle	295	9.00000000000000E+1
BmAngle	296	9.00000000000000E+1
BmAngle	297	9.00000000000000E+1
BmAngle	298	9.00000000000000E+1
BmAngle	299	9.00000000000000E+1
BmAngle	300	9.00000000000000E+1
BmAngle	301	9.00000000000000E+1
BmAngle	302	9.00000000000000E+1
BmAngle	303	9.00000000000000E+1
BmAngle	304	9.00000000000000E+1
BmAngle	305	9.00000000000000E+1
BmAngle	306	9.00000000000000E+1
BmAngle	307	9.00000000000000E+1
BmAngle	308	9.00000000000000E+1
BmAngle	309	9.00000000000000E+1
BmAngle	310	9.00000000000000E+1
BmAngle	311	9.00000000000000E+1
BmAngle	312	9.00000000000000E+1
BmAngle	313	9.00000000000000E+1
BmAngle	314	9.00000000000000E+1
BmAngle	315	9.00000000000000E+1
BmAngle	316	9.00000000000000E+1
BmAngle	317	9.00000000000000E+1
BmAngle	318	9.00000000000000E+1
BmAngle	319	9.00000000000000E+1
BmAngle	320	9.00000000000000E+1
BmAngle	321	9.00000000000000E+1
BmAngle	322	9.00000000000000E+1
BmAngle	323	9.00000000000000E+1
BmAngle	324	9.00000000000000E+1
BmAngle	325	9.00000000000000E+1
BmAngle	326	9.00000000000000E+1
BmAngle	327	9.00000000000000E+1
BmAngle	328	9.00000000000000E+1
BmAngle	329	9.00000000000000E+1
BmAngle	330	9.00000000000000E+1
BmAngle	331	9.00000000000000E+1
BmAngle	332	9.00000000000000E+1
BmAngle	333	9.00000000000000E+1
BmAngle	334	9.00000000000000E+1
BmAngle	335	9.00000000000000E+1
BmAngle	336	9.00000000000000E+1
BmAngle	337	9.00000000000000E+1
BmAngle	338	9.00000000000000E+1

BmAngle	339	9.00000000000000E+1
BmAngle	340	9.00000000000000E+1
BmAngle	341	9.00000000000000E+1
BmAngle	342	9.00000000000000E+1
BmAngle	343	9.00000000000000E+1
BmAngle	344	9.00000000000000E+1
BmAngle	345	9.00000000000000E+1
BmAngle	346	9.00000000000000E+1
BmAngle	347	9.00000000000000E+1
BmAngle	348	9.00000000000000E+1
BmAngle	349	9.00000000000000E+1
BmAngle	350	9.00000000000000E+1
BmAngle	351	9.00000000000000E+1
BmAngle	352	9.00000000000000E+1
BmAngle	353	9.00000000000000E+1
BmAngle	354	9.00000000000000E+1
BmAngle	355	9.00000000000000E+1
BmAngle	356	9.00000000000000E+1
BmAngle	357	9.00000000000000E+1
BmAngle	358	9.00000000000000E+1
BmAngle	359	9.00000000000000E+1
BmAngle	360	9.00000000000000E+1
BmAngle	361	9.00000000000000E+1
BmAngle	362	9.00000000000000E+1
BmAngle	363	9.00000000000000E+1
BmAngle	364	9.00000000000000E+1
BmAngle	365	9.00000000000000E+1
BmAngle	366	9.00000000000000E+1
BmAngle	367	9.00000000000000E+1
BmAngle	368	9.00000000000000E+1
BmAngle	369	9.00000000000000E+1
BmAngle	370	9.00000000000000E+1
BmAngle	371	9.00000000000000E+1
BmAngle	372	9.00000000000000E+1
BmAngle	373	9.00000000000000E+1
BmAngle	374	9.00000000000000E+1
BmAngle	375	9.00000000000000E+1
BmAngle	376	9.00000000000000E+1
BmAngle	377	9.00000000000000E+1
BmAngle	378	9.00000000000000E+1
BmAngle	379	9.00000000000000E+1
BmAngle	380	9.00000000000000E+1
BmAngle	381	9.00000000000000E+1
BmAngle	382	9.00000000000000E+1
BmAngle	383	9.00000000000000E+1
BmAngle	384	9.00000000000000E+1
BmAngle	385	9.00000000000000E+1
BmAngle	386	9.00000000000000E+1
BmAngle	387	9.00000000000000E+1
BmAngle	388	9.00000000000000E+1
BmAngle	389	9.00000000000000E+1
BmAngle	390	9.00000000000000E+1
BmAngle	391	9.00000000000000E+1
BmAngle	392	9.00000000000000E+1

BmAngle	393	9.00000000000000E+1
BmAngle	394	9.00000000000000E+1
BmAngle	395	9.00000000000000E+1
BmAngle	396	9.00000000000000E+1
BmAngle	397	9.00000000000000E+1
BmAngle	398	9.00000000000000E+1
BmAngle	399	9.00000000000000E+1
BmAngle	400	9.00000000000000E+1
BmAngle	401	9.00000000000000E+1
BmAngle	402	9.00000000000000E+1
BmAngle	403	9.00000000000000E+1
BmAngle	404	9.00000000000000E+1
BmAngle	405	9.00000000000000E+1
BmAngle	406	9.00000000000000E+1
BmAngle	407	9.00000000000000E+1
BmAngle	408	9.00000000000000E+1
BmAngle	409	9.00000000000000E+1
BmAngle	410	9.00000000000000E+1
BmAngle	411	9.00000000000000E+1
BmAngle	412	9.00000000000000E+1
BmAngle	413	9.00000000000000E+1
BmAngle	414	9.00000000000000E+1
BmAngle	415	9.00000000000000E+1
BmAngle	416	9.00000000000000E+1
BmAngle	417	9.00000000000000E+1
BmAngle	418	9.00000000000000E+1
BmAngle	419	9.00000000000000E+1
BmAngle	420	9.00000000000000E+1
BmAngle	421	9.00000000000000E+1
BmAngle	422	9.00000000000000E+1
BmAngle	423	9.00000000000000E+1
BmAngle	424	9.00000000000000E+1
BmAngle	425	9.00000000000000E+1
BmAngle	426	9.00000000000000E+1
BmAngle	427	9.00000000000000E+1
BmAngle	428	9.00000000000000E+1
BmAngle	429	9.00000000000000E+1
BmAngle	430	9.00000000000000E+1
BmAngle	431	9.00000000000000E+1
BmAngle	432	9.00000000000000E+1
BmAngle	433	9.00000000000000E+1
BmAngle	439	9.00000000000000E+1
BmAngle	440	9.00000000000000E+1
BmAngle	441	9.00000000000000E+1
BmAngle	442	9.00000000000000E+1
BmAngle	443	9.00000000000000E+1
BmAngle	444	9.00000000000000E+1
BmAngle	445	9.00000000000000E+1
BmAngle	446	9.00000000000000E+1
BmAngle	447	9.00000000000000E+1
BmAngle	448	9.00000000000000E+1
BmAngle	449	9.00000000000000E+1
BmAngle	450	9.00000000000000E+1
BmAngle	451	9.00000000000000E+1

BmAngle	452	9.00000000000000E+1
BmAngle	453	9.00000000000000E+1
BmAngle	454	9.00000000000000E+1
BmAngle	455	9.00000000000000E+1
BmAngle	456	9.00000000000000E+1
BmAngle	457	9.00000000000000E+1
BmAngle	458	9.00000000000000E+1
BmAngle	459	9.00000000000000E+1
BmAngle	460	9.00000000000000E+1
BmAngle	461	9.00000000000000E+1
BmAngle	462	9.00000000000000E+1
BmAngle	463	9.00000000000000E+1
BmAngle	464	9.00000000000000E+1
BmAngle	465	9.00000000000000E+1
BmAngle	466	9.00000000000000E+1
BmAngle	467	9.00000000000000E+1
BmAngle	468	9.00000000000000E+1
BmAngle	469	9.00000000000000E+1
BmAngle	470	9.00000000000000E+1
BmAngle	471	9.00000000000000E+1
BmAngle	472	9.00000000000000E+1
BmAngle	473	9.00000000000000E+1
BmAngle	474	9.00000000000000E+1
BmAngle	475	9.00000000000000E+1
BmAngle	476	9.00000000000000E+1
BmAngle	477	9.00000000000000E+1
BmAngle	478	9.00000000000000E+1
BmAngle	479	9.00000000000000E+1
BmAngle	480	9.00000000000000E+1
BmAngle	481	9.00000000000000E+1
BmAngle	482	9.00000000000000E+1
BmAngle	483	9.00000000000000E+1
BmAngle	484	9.00000000000000E+1
BmAngle	485	9.00000000000000E+1
BmAngle	486	9.00000000000000E+1
BmAngle	487	9.00000000000000E+1
BmAngle	488	9.00000000000000E+1
BmAngle	489	9.00000000000000E+1
BmAngle	490	9.00000000000000E+1
BmAngle	491	9.00000000000000E+1
BmAngle	492	9.00000000000000E+1
BmAngle	493	9.00000000000000E+1
BmAngle	494	9.00000000000000E+1
BmAngle	495	9.00000000000000E+1
BmAngle	496	9.00000000000000E+1
BmAngle	497	9.00000000000000E+1
BmAngle	498	9.00000000000000E+1
BmAngle	499	9.00000000000000E+1
BmAngle	500	9.00000000000000E+1
BmAngle	501	9.00000000000000E+1
BmAngle	502	9.00000000000000E+1
BmAngle	503	9.00000000000000E+1
BmAngle	504	9.00000000000000E+1
BmAngle	505	9.00000000000000E+1

BmAngle	506	9.00000000000000E+1
BmAngle	507	9.00000000000000E+1
BmAngle	508	9.00000000000000E+1
BmAngle	509	9.00000000000000E+1
BmAngle	510	9.00000000000000E+1
BmAngle	511	9.00000000000000E+1
BmAngle	512	9.00000000000000E+1
BmAngle	513	9.00000000000000E+1
BmAngle	514	9.00000000000000E+1
BmAngle	515	9.00000000000000E+1
BmAngle	516	9.00000000000000E+1
BmAngle	517	9.00000000000000E+1
BmAngle	518	9.00000000000000E+1
BmAngle	519	9.00000000000000E+1
BmAngle	520	9.00000000000000E+1
BmAngle	521	9.00000000000000E+1
BmAngle	522	9.00000000000000E+1
BmAngle	523	9.00000000000000E+1
BmAngle	524	9.00000000000000E+1
BmAngle	525	9.00000000000000E+1
BmAngle	526	9.00000000000000E+1
BmAngle	527	9.00000000000000E+1
BmAngle	528	9.00000000000000E+1
BmAngle	529	9.00000000000000E+1
BmAngle	530	9.00000000000000E+1
BmAngle	531	9.00000000000000E+1
BmAngle	532	9.00000000000000E+1
BmAngle	533	9.00000000000000E+1
BmAngle	534	9.00000000000000E+1
BmAngle	535	9.00000000000000E+1
BmAngle	536	9.00000000000000E+1
BmAngle	537	9.00000000000000E+1
BmAngle	538	9.00000000000000E+1
BmAngle	539	9.00000000000000E+1
BmAngle	540	9.00000000000000E+1
BmAngle	541	9.00000000000000E+1
BmAngle	542	9.00000000000000E+1
BmAngle	543	9.00000000000000E+1
BmAngle	544	9.00000000000000E+1
BmAngle	545	9.00000000000000E+1
BmAngle	546	9.00000000000000E+1
BmAngle	547	9.00000000000000E+1
BmAngle	548	9.00000000000000E+1
BmAngle	549	9.00000000000000E+1
BmAngle	550	9.00000000000000E+1
BmAngle	551	9.00000000000000E+1
BmAngle	552	9.00000000000000E+1
BmAngle	553	9.00000000000000E+1
BmAngle	554	9.00000000000000E+1
BmAngle	555	9.00000000000000E+1
BmAngle	556	9.00000000000000E+1
BmAngle	557	9.00000000000000E+1
BmAngle	558	9.00000000000000E+1
BmAngle	559	9.00000000000000E+1

BmAngle	560	9.00000000000000E+1
BmAngle	561	9.00000000000000E+1
BmAngle	562	9.00000000000000E+1
BmAngle	563	9.00000000000000E+1
BmAngle	564	9.00000000000000E+1
BmAngle	565	9.00000000000000E+1
BmAngle	566	9.00000000000000E+1
BmAngle	567	9.00000000000000E+1
BmAngle	568	9.00000000000000E+1
BmAngle	569	9.00000000000000E+1
BmAngle	570	9.00000000000000E+1
BmAngle	571	9.00000000000000E+1
BmAngle	572	9.00000000000000E+1
BmAngle	573	9.00000000000000E+1
BmAngle	574	9.00000000000000E+1
BmAngle	575	9.00000000000000E+1
BmAngle	576	9.00000000000000E+1
BmAngle	577	9.00000000000000E+1
BmAngle	578	9.00000000000000E+1
BmAngle	579	9.00000000000000E+1
BmAngle	580	9.00000000000000E+1
BmAngle	581	9.00000000000000E+1
BmAngle	582	9.00000000000000E+1
BmAngle	583	9.00000000000000E+1
BmAngle	584	9.00000000000000E+1
BmAngle	585	9.00000000000000E+1
BmAngle	586	9.00000000000000E+1
BmAngle	587	9.00000000000000E+1
BmAngle	588	9.00000000000000E+1
BmAngle	589	9.00000000000000E+1
BmAngle	590	9.00000000000000E+1
BmAngle	591	9.00000000000000E+1
BmAngle	592	9.00000000000000E+1
BmAngle	593	9.00000000000000E+1
BmAngle	594	9.00000000000000E+1
BmAngle	595	9.00000000000000E+1
BmAngle	596	9.00000000000000E+1
BmAngle	597	9.00000000000000E+1
BmAngle	598	9.00000000000000E+1
BmAngle	599	9.00000000000000E+1
BmAngle	600	9.00000000000000E+1
BmAngle	601	9.00000000000000E+1
BmAngle	602	9.00000000000000E+1
BmAngle	603	9.00000000000000E+1
BmAngle	604	9.00000000000000E+1
BmAngle	605	9.00000000000000E+1
BmAngle	606	9.00000000000000E+1
BmAngle	607	9.00000000000000E+1
BmAngle	608	9.00000000000000E+1
BmAngle	609	9.00000000000000E+1
BmAngle	610	9.00000000000000E+1
BmAngle	611	9.00000000000000E+1
BmAngle	612	9.00000000000000E+1
BmAngle	613	9.00000000000000E+1

BmAngle	614	9.00000000000000E+1
BmAngle	615	9.00000000000000E+1
BmAngle	616	9.00000000000000E+1
BmAngle	617	9.00000000000000E+1
BmAngle	618	9.00000000000000E+1
BmAngle	619	9.00000000000000E+1
BmAngle	620	9.00000000000000E+1
BmAngle	621	9.00000000000000E+1
BmAngle	622	9.00000000000000E+1
BmAngle	623	9.00000000000000E+1
BmAngle	624	9.00000000000000E+1
BmAngle	625	9.00000000000000E+1
BmAngle	626	9.00000000000000E+1
BmAngle	627	9.00000000000000E+1
BmAngle	628	9.00000000000000E+1
BmAngle	629	9.00000000000000E+1
BmAngle	630	9.00000000000000E+1
BmAngle	631	9.00000000000000E+1
BmAngle	632	9.00000000000000E+1
BmAngle	633	9.00000000000000E+1
BmAngle	634	9.00000000000000E+1
BmAngle	635	9.00000000000000E+1
BmAngle	636	9.00000000000000E+1
BmAngle	637	9.00000000000000E+1
BmAngle	638	9.00000000000000E+1
BmAngle	639	9.00000000000000E+1
BmAngle	640	9.00000000000000E+1
BmAngle	641	9.00000000000000E+1
BmAngle	642	9.00000000000000E+1
BmAngle	643	9.00000000000000E+1
BmAngle	644	9.00000000000000E+1
BmAngle	645	9.00000000000000E+1
BmAngle	646	9.00000000000000E+1
BmAngle	647	9.00000000000000E+1
BmAngle	648	9.00000000000000E+1
BmAngle	649	9.00000000000000E+1
BmAngle	650	9.00000000000000E+1
BmAngle	651	9.00000000000000E+1
BmAngle	652	9.00000000000000E+1
BmAngle	653	9.00000000000000E+1
BmAngle	654	9.00000000000000E+1
BmAngle	655	9.00000000000000E+1
BmAngle	656	9.00000000000000E+1
BmAngle	657	9.00000000000000E+1
BmAngle	658	9.00000000000000E+1
BmAngle	659	9.00000000000000E+1
BmAngle	660	9.00000000000000E+1
BmAngle	661	9.00000000000000E+1
BmAngle	662	9.00000000000000E+1
BmAngle	663	9.00000000000000E+1
BmAngle	664	9.00000000000000E+1
BmAngle	665	9.00000000000000E+1
BmAngle	666	9.00000000000000E+1
BmAngle	667	9.00000000000000E+1

BmAngle	668	9.00000000000000E+1
BmAngle	669	9.00000000000000E+1
BmAngle	670	9.00000000000000E+1
BmAngle	671	9.00000000000000E+1
BmAngle	672	9.00000000000000E+1
BmAngle	673	9.00000000000000E+1
BmAngle	674	9.00000000000000E+1
BmAngle	675	9.00000000000000E+1
BmAngle	676	9.00000000000000E+1
BmAngle	677	9.00000000000000E+1
BmAngle	678	9.00000000000000E+1
BmAngle	679	9.00000000000000E+1
BmAngle	680	9.00000000000000E+1
BmAngle	681	9.00000000000000E+1
BmAngle	682	9.00000000000000E+1
BmAngle	683	9.00000000000000E+1
BmAngle	684	9.00000000000000E+1
BmAngle	685	9.00000000000000E+1
BmAngle	686	9.00000000000000E+1
BmAngle	687	9.00000000000000E+1
BmAngle	688	9.00000000000000E+1
BmAngle	689	9.00000000000000E+1
BmAngle	690	9.00000000000000E+1
BmAngle	691	9.00000000000000E+1
BmAngle	692	9.00000000000000E+1
BmAngle	693	9.00000000000000E+1
BmAngle	694	9.00000000000000E+1
BmAngle	695	9.00000000000000E+1
BmAngle	696	9.00000000000000E+1
BmAngle	697	9.00000000000000E+1
BmAngle	698	9.00000000000000E+1
BmAngle	699	9.00000000000000E+1
BmAngle	700	9.00000000000000E+1
BmAngle	701	9.00000000000000E+1
BmAngle	702	9.00000000000000E+1
BmAngle	703	9.00000000000000E+1
BmAngle	704	9.00000000000000E+1
BmAngle	705	9.00000000000000E+1
BmAngle	706	9.00000000000000E+1
BmAngle	707	9.00000000000000E+1
BmAngle	708	9.00000000000000E+1
BmAngle	709	9.00000000000000E+1
BmAngle	710	9.00000000000000E+1
BmAngle	711	9.00000000000000E+1
BmAngle	712	9.00000000000000E+1
BmAngle	713	9.00000000000000E+1
BmAngle	714	9.00000000000000E+1
BmAngle	715	9.00000000000000E+1
BmAngle	716	9.00000000000000E+1
BmAngle	717	9.00000000000000E+1
BmAngle	718	9.00000000000000E+1
BmAngle	719	9.00000000000000E+1
BmAngle	720	9.00000000000000E+1
BmAngle	721	9.00000000000000E+1

BmAngle	722	9.00000000000000E+1
BmAngle	723	9.00000000000000E+1
BmAngle	724	9.00000000000000E+1
BmAngle	725	9.00000000000000E+1
BmAngle	726	9.00000000000000E+1
BmAngle	727	9.00000000000000E+1
BmAngle	728	9.00000000000000E+1
BmAngle	729	9.00000000000000E+1
BmAngle	730	9.00000000000000E+1
BmAngle	731	9.00000000000000E+1
BmAngle	732	9.00000000000000E+1
BmAngle	733	9.00000000000000E+1
BmAngle	734	9.00000000000000E+1
BmAngle	735	9.00000000000000E+1
BmAngle	736	9.00000000000000E+1
BmAngle	737	9.00000000000000E+1
BmAngle	738	9.00000000000000E+1
BmAngle	739	9.00000000000000E+1
BmAngle	740	9.00000000000000E+1
BmAngle	741	9.00000000000000E+1
BmAngle	742	9.00000000000000E+1
BmAngle	743	9.00000000000000E+1
BmAngle	744	9.00000000000000E+1
BmAngle	745	9.00000000000000E+1
BmAngle	746	9.00000000000000E+1
BmAngle	747	9.00000000000000E+1
BmAngle	748	9.00000000000000E+1
BmAngle	749	9.00000000000000E+1
BmAngle	750	9.00000000000000E+1
BmAngle	751	9.00000000000000E+1
BmAngle	752	9.00000000000000E+1
BmAngle	753	9.00000000000000E+1
BmAngle	754	9.00000000000000E+1
BmAngle	755	9.00000000000000E+1
BmAngle	756	9.00000000000000E+1
BmAngle	757	9.00000000000000E+1
BmAngle	758	9.00000000000000E+1
BmAngle	759	9.00000000000000E+1
BmAngle	760	9.00000000000000E+1
BmAngle	761	9.00000000000000E+1
BmAngle	762	9.00000000000000E+1
BmAngle	763	9.00000000000000E+1
BmAngle	764	9.00000000000000E+1
BmAngle	765	9.00000000000000E+1
BmAngle	766	9.00000000000000E+1
BmAngle	767	9.00000000000000E+1
BmAngle	768	9.00000000000000E+1
BmAngle	769	9.00000000000000E+1
BmAngle	770	9.00000000000000E+1
BmAngle	771	9.00000000000000E+1
BmAngle	772	9.00000000000000E+1
BmAngle	773	9.00000000000000E+1
BmAngle	774	9.00000000000000E+1
BmAngle	775	9.00000000000000E+1

BmAngle	776	9.00000000000000E+1
BmAngle	777	9.00000000000000E+1
BmAngle	778	9.00000000000000E+1
BmAngle	779	9.00000000000000E+1
BmAngle	780	9.00000000000000E+1
BmAngle	781	9.00000000000000E+1
BmAngle	782	9.00000000000000E+1
BmAngle	783	9.00000000000000E+1
BmAngle	784	9.00000000000000E+1
BmAngle	785	9.00000000000000E+1
BmAngle	786	9.00000000000000E+1
BmAngle	787	9.00000000000000E+1
BmAngle	788	9.00000000000000E+1
BmAngle	789	9.00000000000000E+1
BmAngle	790	9.00000000000000E+1
BmAngle	791	9.00000000000000E+1
BmAngle	792	9.00000000000000E+1
BmAngle	793	9.00000000000000E+1
BmAngle	794	9.00000000000000E+1
BmAngle	795	9.00000000000000E+1
BmAngle	796	9.00000000000000E+1
BmAngle	797	9.00000000000000E+1
BmAngle	798	9.00000000000000E+1
BmAngle	799	9.00000000000000E+1
BmAngle	800	9.00000000000000E+1
BmAngle	801	9.00000000000000E+1
BmAngle	802	9.00000000000000E+1
BmAngle	803	9.00000000000000E+1
BmAngle	804	9.00000000000000E+1
BmAngle	805	9.00000000000000E+1
BmAngle	806	9.00000000000000E+1
BmAngle	807	9.00000000000000E+1
BmAngle	808	9.00000000000000E+1
BmAngle	809	9.00000000000000E+1
BmAngle	810	9.00000000000000E+1
BmAngle	811	9.00000000000000E+1
BmAngle	812	9.00000000000000E+1
BmAngle	813	9.00000000000000E+1
BmAngle	814	9.00000000000000E+1
BmAngle	815	9.00000000000000E+1
BmAngle	816	9.00000000000000E+1
BmAngle	817	9.00000000000000E+1
BmAngle	818	9.00000000000000E+1
BmAngle	819	9.00000000000000E+1
BmAngle	820	9.00000000000000E+1
BmAngle	821	9.00000000000000E+1
BmAngle	822	9.00000000000000E+1
BmAngle	823	9.00000000000000E+1
BmAngle	824	9.00000000000000E+1
BmAngle	825	9.00000000000000E+1
BmAngle	826	9.00000000000000E+1
BmAngle	827	9.00000000000000E+1
BmAngle	828	9.00000000000000E+1
BmAngle	829	9.00000000000000E+1

```
   BmAngle                 830     9.00000000000000E+1
   BmAngle                 831     9.00000000000000E+1
   BmAngle                 832     9.00000000000000E+1
   BmAngle                 833     9.00000000000000E+1
   BmAngle                 834     9.00000000000000E+1
   BmAngle                 835     9.00000000000000E+1
   BmAngle                 836     9.00000000000000E+1
   BmAngle                 837     9.00000000000000E+1
   BmAngle                 838     9.00000000000000E+1
   BmAngle                 839     9.00000000000000E+1
   BmAngle                 840     9.00000000000000E+1
   BmAngle                 841     9.00000000000000E+1
   BmAngle                 842     9.00000000000000E+1
   BmAngle                 843     9.00000000000000E+1
   BmAngle                 844     9.00000000000000E+1
   BmAngle                 845     9.00000000000000E+1
   BmAngle                 846     9.00000000000000E+1
   BmAngle                 847     9.00000000000000E+1
   BmAngle                 848     9.00000000000000E+1
   BmAngle                 849     9.00000000000000E+1
   BmAngle                 850     9.00000000000000E+1
   BmAngle                 851     9.00000000000000E+1
   BmAngle                 852     9.00000000000000E+1
   BmAngle                 853     9.00000000000000E+1
   BmAngle                 854     9.00000000000000E+1
   BmAngle                 855     9.00000000000000E+1
   BmAngle                 856     9.00000000000000E+1
   BmAngle                 857     9.00000000000000E+1
   BmAngle                 858     9.00000000000000E+1
   BmAngle                 859     9.00000000000000E+1
   BmAngle                 860     9.00000000000000E+1

/ ____________________________________________________________________________
/ BEAM ROTATIONAL END-RELEASES

   BmEndReleaseR            23       2   R1                          R2

   BmEndReleaseR            24       2   R1                          R2

   BmEndReleaseR            69       1   R1                          R2

   BmEndReleaseR            74       1   R1                          R2

   BmEndReleaseR            79       1   R1                          R2

   BmEndReleaseR            84       1   R1                          R2

   BmEndReleaseR            89       1   R1                          R2

   BmEndReleaseR            94       1   R1                          R2

   BmEndReleaseR            99       1   R1                          R2

   BmEndReleaseR           104       1   R1                          R2
```

BmEndReleaseR	109	1	R1	R2
BmEndReleaseR	114	1	R1	R2
BmEndReleaseR	119	1	R1	R2
BmEndReleaseR	124	1	R1	R2
BmEndReleaseR	129	1	R1	R2
BmEndReleaseR	134	1	R1	R2
BmEndReleaseR	139	1	R1	R2
BmEndReleaseR	144	1	R1	R2
BmEndReleaseR	149	1	R1	R2
BmEndReleaseR	154	1	R1	R2
BmEndReleaseR	159	1	R1	R2
BmEndReleaseR	434	1	R1	R2
BmEndReleaseR	439	1	R1	R2
BmEndReleaseR	444	1	R1	R2
BmEndReleaseR	637	2	R1	R2
BmEndReleaseR	638	1	R1	R2
BmEndReleaseR	643	2	R1	R2
BmEndReleaseR	644	1	R1	R2
BmEndReleaseR	669	2	R1	R2
BmEndReleaseR	670	2	R1	R2
BmEndReleaseR	671	2	R1	R2
BmEndReleaseR	672	2	R1	R2
BmEndReleaseR	673	2	R1	R2
BmEndReleaseR	674	2	R1	R2
BmEndReleaseR	675	2	R1	R2
BmEndReleaseR	676	2	R1	R2
BmEndReleaseR	677	2	R1	R2

BmEndReleaseR	678	2	R1	R2
BmEndReleaseR	679	2	R1	R2
BmEndReleaseR	680	2	R1	R2
BmEndReleaseR	681	2	R1	R2
BmEndReleaseR	682	2	R1	R2
BmEndReleaseR	683	2	R1	R2
BmEndReleaseR	684	2	R1	R2
BmEndReleaseR	685	1	R1	R2
BmEndReleaseR	686	1	R1	R2
BmEndReleaseR	687	1	R1	R2
BmEndReleaseR	688	1	R1	R2
BmEndReleaseR	689	1	R1	R2
BmEndReleaseR	690	1	R1	R2
BmEndReleaseR	691	1	R1	R2
BmEndReleaseR	692	1	R1	R2
BmEndReleaseR	725	1	R1	R2
BmEndReleaseR	726	1	R1	R2
BmEndReleaseR	727	1	R1	R2
BmEndReleaseR	728	1	R1	R2
BmEndReleaseR	729	1	R1	R2
BmEndReleaseR	730	1	R1	R2
BmEndReleaseR	731	1	R1	R2
BmEndReleaseR	732	1	R1	R2
BmEndReleaseR	765	2	R1	R2
BmEndReleaseR	766	2	R1	R2
BmEndReleaseR	767	2	R1	R2
BmEndReleaseR	768	2	R1	R2

BmEndReleaseR	769	2	R1	R2
BmEndReleaseR	770	2	R1	R2
BmEndReleaseR	771	2	R1	R2
BmEndReleaseR	772	2	R1	R2
BmEndReleaseR	773	1	R1	R2
BmEndReleaseR	774	1	R1	R2
BmEndReleaseR	775	1	R1	R2
BmEndReleaseR	776	1	R1	R2
BmEndReleaseR	777	1	R1	R2
BmEndReleaseR	778	1	R1	R2
BmEndReleaseR	779	1	R1	R2
BmEndReleaseR	780	1	R1	R2
BmEndReleaseR	813	2	R1	R2
BmEndReleaseR	814	2	R1	R2
BmEndReleaseR	815	2	R1	R2
BmEndReleaseR	816	2	R1	R2
BmEndReleaseR	817	2	R1	R2
BmEndReleaseR	818	2	R1	R2
BmEndReleaseR	819	2	R1	R2
BmEndReleaseR	820	2	R1	R2
BmEndReleaseR	821	1	R1	R2
BmEndReleaseR	822	1	R1	R2
BmEndReleaseR	823	1	R1	R2
BmEndReleaseR	824	1	R1	R2
BmEndReleaseR	825	1	R1	R2
BmEndReleaseR	826	1	R1	R2
BmEndReleaseR	827	1	R1	R2

```
  BmEndReleaseR          828       1   R1                        R2


/ ____________________________________________________________________________
/ PLATE ELEMENTS

  Quad4                    1       0      14       1     545     546     346
  1
  Quad4                    2       0      14       1     577     545       1
368
  Quad4                    3       0      14       1     547     548     347
  2
  Quad4                    4       0      14       1     548     580     371
347
  Quad4                    5       0      14       1     580     579     370
371
  Quad4                    6       0      14       1     579     578     369
370
  Quad4                    7       0      14       1     578     577     368
369
  Quad4                    8       0      14       1     599     547       2
390
  Quad4                    9       0      14       1     600     599     390
391
  Quad4                   10       0      14       1     601     600     391
392
  Quad4                   11       0      14       1     550     601     392
348
  Quad4                   12       0      14       1     549     550     348
349
  Quad4                   13       0      14       1     551     549     349
  3
  Quad4                   14       0      14       1     581     551       3
372
  Quad4                   15       0      14       1     582     581     372
373
  Quad4                   16       0      14       1     583     582     373
374
  Quad4                   17       0      14       1     584     583     374
375
  Quad4                   18       0      14       1     553     584     375
350
  Quad4                   19       0      14       1     552     553     350
  4
  Quad4                   20       0      14       1     585     552       4
376
  Quad4                   21       0      14       1     586     585     376
377
  Quad4                   22       0      14       1     587     586     377
378
  Quad4                   23       0      14       1     588     587     378
379
  Quad4                   24       0      14       1     555     588     379
```

351
Quad4 25 0 14 1 554 555 351
5
Quad4 26 0 14 1 589 554 5
380
Quad4 27 0 14 1 590 589 380
381
Quad4 28 0 14 1 591 590 381
382
Quad4 29 0 14 1 592 591 382
383
Quad4 30 0 14 1 557 592 383
352
Quad4 31 0 14 1 556 557 352
6
Quad4 32 0 14 1 593 556 6
384
Quad4 33 0 14 1 594 593 384
385
Quad4 34 0 14 1 595 594 385
386
Quad4 35 0 14 1 596 595 386
387
Quad4 36 0 14 1 559 596 387
353
Quad4 37 0 14 1 558 559 353
7
Quad4 38 0 14 1 597 558 7
388
Quad4 39 0 14 1 598 597 388
389
Quad4 40 0 14 1 561 598 389
354
Quad4 41 0 14 1 560 561 354
355
Quad4 42 0 14 1 563 560 355
356
Quad4 43 0 14 1 562 563 356
8
Quad4 44 0 14 1 573 562 8
364
Quad4 45 0 14 1 574 573 364
365
Quad4 46 0 14 1 575 574 365
366
Quad4 47 0 14 1 576 575 366
367
Quad4 48 0 14 1 565 576 367
357
Quad4 49 0 14 1 564 565 357
9
Quad4 50 0 14 1 569 564 9
360
Quad4 51 0 14 1 570 569 360

361
Quad4 52 0 14 1 571 570 361
362
Quad4 53 0 14 1 572 571 362
363
Quad4 54 0 14 1 567 572 363
358
Quad4 55 0 14 1 566 567 358
10
Quad4 56 0 14 1 568 566 10
359
Quad4 57 0 14 1 399 398 602
603
Quad4 58 0 14 1 441 399 603
604
Quad4 59 0 14 1 401 400 605
606
Quad4 60 0 14 1 400 444 607
605
Quad4 61 0 14 1 444 443 608
607
Quad4 62 0 14 1 443 442 609
608
Quad4 63 0 14 1 442 441 604
609
Quad4 64 0 14 1 463 401 606
610
Quad4 65 0 14 1 464 463 610
611
Quad4 66 0 14 1 465 464 611
612
Quad4 67 0 14 1 402 465 612
613
Quad4 68 0 14 1 403 402 613
614
Quad4 69 0 14 1 404 403 614
615
Quad4 70 0 14 1 445 404 615
616
Quad4 71 0 14 1 446 445 616
617
Quad4 72 0 14 1 447 446 617
618
Quad4 73 0 14 1 448 447 618
619
Quad4 74 0 14 1 405 448 619
620
Quad4 75 0 14 1 406 405 620
621
Quad4 76 0 14 1 449 406 621
622
Quad4 77 0 14 1 450 449 622
623
Quad4 78 0 14 1 451 450 623

624							
	Quad4	79	0	14	1	452	451	624
625							
	Quad4	80	0	14	1	407	452	625
626							
	Quad4	81	0	14	1	408	407	626
627							
	Quad4	82	0	14	1	453	408	627
628							
	Quad4	83	0	14	1	454	453	628
629							
	Quad4	84	0	14	1	455	454	629
630							
	Quad4	85	0	14	1	456	455	630
631							
	Quad4	86	0	14	1	409	456	631
632							
	Quad4	87	0	14	1	410	409	632
633							
	Quad4	88	0	14	1	457	410	633
634							
	Quad4	89	0	14	1	458	457	634
635							
	Quad4	90	0	14	1	459	458	635
636							
	Quad4	91	0	14	1	460	459	636
637							
	Quad4	92	0	14	1	411	460	637
638							
	Quad4	93	0	14	1	412	411	638
639							
	Quad4	94	0	14	1	461	412	639
640							
	Quad4	95	0	14	1	462	461	640
641							
	Quad4	96	0	14	1	413	462	641
642							
	Quad4	97	0	14	1	414	413	642
643							
	Quad4	98	0	14	1	415	414	643
644							
	Quad4	99	0	14	1	416	415	644
645							
	Quad4	100	0	14	1	437	416	645
646							
	Quad4	101	0	14	1	438	437	646
647							
	Quad4	102	0	14	1	439	438	647
648							
	Quad4	103	0	14	1	440	439	648
649							
	Quad4	104	0	14	1	417	440	649
650							
	Quad4	105	0	14	1	418	417	650

651
Quad4 106 0 14 1 433 418 651
652
Quad4 107 0 14 1 434 433 652
653
Quad4 108 0 14 1 435 434 653
654
Quad4 109 0 14 1 436 435 654
655
Quad4 110 0 14 1 419 436 655
656
Quad4 111 0 14 1 420 419 656
657
Quad4 112 0 14 1 432 420 657
658
Quad4 113 0 15 1 603 602 819
820
Quad4 114 0 15 1 604 603 820
821
Quad4 115 0 15 1 606 605 822
823
Quad4 116 0 15 1 605 607 824
822
Quad4 117 0 15 1 607 608 825
824
Quad4 118 0 15 1 608 609 826
825
Quad4 119 0 15 1 609 604 821
826
Quad4 120 0 15 1 610 606 823
827
Quad4 121 0 15 1 611 610 827
828
Quad4 122 0 15 1 612 611 828
829
Quad4 123 0 15 1 613 612 829
830
Quad4 124 0 15 1 614 613 830
831
Quad4 125 0 15 1 615 614 831
832
Quad4 126 0 15 1 616 615 832
833
Quad4 127 0 15 1 617 616 833
834
Quad4 128 0 15 1 618 617 834
835
Quad4 129 0 15 1 619 618 835
836
Quad4 130 0 15 1 620 619 836
837
Quad4 131 0 15 1 621 620 837
838
Quad4 132 0 15 1 622 621 838

839
Quad4 133 0 15 1 623 622 839
840
Quad4 134 0 15 1 624 623 840
841
Quad4 135 0 15 1 625 624 841
842
Quad4 136 0 15 1 626 625 842
843
Quad4 137 0 15 1 627 626 843
844
Quad4 138 0 15 1 628 627 844
845
Quad4 139 0 15 1 629 628 845
846
Quad4 140 0 15 1 630 629 846
847
Quad4 141 0 15 1 631 630 847
848
Quad4 142 0 15 1 632 631 848
849
Quad4 143 0 15 1 633 632 849
850
Quad4 144 0 15 1 634 633 850
851
Quad4 145 0 15 1 635 634 851
852
Quad4 146 0 15 1 636 635 852
853
Quad4 147 0 15 1 637 636 853
854
Quad4 148 0 15 1 638 637 854
855
Quad4 149 0 15 1 639 638 855
856
Quad4 150 0 15 1 640 639 856
857
Quad4 151 0 15 1 641 640 857
858
Quad4 152 0 15 1 642 641 858
859
Quad4 153 0 15 1 643 642 859
860
Quad4 154 0 15 1 644 643 860
861
Quad4 155 0 15 1 645 644 861
862
Quad4 156 0 15 1 646 645 862
863
Quad4 157 0 15 1 647 646 863
864
Quad4 158 0 15 1 648 647 864
865
Quad4 159 0 15 1 649 648 865

866
Quad4 160 0 15 1 650 649 866
867
Quad4 161 0 15 1 651 650 867
868
Quad4 162 0 15 1 652 651 868
869
Quad4 163 0 15 1 653 652 869
870
Quad4 164 0 15 1 654 653 870
871
Quad4 165 0 15 1 655 654 871
872
Quad4 166 0 15 1 656 655 872
873
Quad4 167 0 15 1 657 656 873
874
Quad4 168 0 15 1 658 657 874
875
Quad4 169 0 16 1 876 877 398
399
Quad4 170 0 16 1 878 876 399
441
Quad4 171 0 16 1 879 880 400
401
Quad4 172 0 16 1 880 881 444
400
Quad4 173 0 16 1 881 882 443
444
Quad4 174 0 16 1 882 883 442
443
Quad4 175 0 16 1 883 878 441
442
Quad4 176 0 16 1 884 879 401
463
Quad4 177 0 16 1 885 884 463
464
Quad4 178 0 16 1 886 885 464
465
Quad4 179 0 16 1 887 886 465
402
Quad4 180 0 16 1 888 887 402
403
Quad4 181 0 16 1 889 888 403
404
Quad4 182 0 16 1 890 889 404
445
Quad4 183 0 16 1 891 890 445
446
Quad4 184 0 16 1 892 891 446
447
Quad4 185 0 16 1 893 892 447
448
Quad4 186 0 16 1 894 893 448

405
Quad4 187 0 16 1 895 894 405
406
Quad4 188 0 16 1 896 895 406
449
Quad4 189 0 16 1 897 896 449
450
Quad4 190 0 16 1 898 897 450
451
Quad4 191 0 16 1 899 898 451
452
Quad4 192 0 16 1 900 899 452
407
Quad4 193 0 16 1 901 900 407
408
Quad4 194 0 16 1 902 901 408
453
Quad4 195 0 16 1 903 902 453
454
Quad4 196 0 16 1 904 903 454
455
Quad4 197 0 16 1 905 904 455
456
Quad4 198 0 16 1 906 905 456
409
Quad4 199 0 16 1 907 906 409
410
Quad4 200 0 16 1 908 907 410
457
Quad4 201 0 16 1 909 908 457
458
Quad4 202 0 16 1 910 909 458
459
Quad4 203 0 16 1 911 910 459
460
Quad4 204 0 16 1 912 911 460
411
Quad4 205 0 16 1 913 912 411
412
Quad4 206 0 16 1 914 913 412
461
Quad4 207 0 16 1 915 914 461
462
Quad4 208 0 16 1 916 915 462
413
Quad4 209 0 16 1 917 916 413
414
Quad4 210 0 16 1 918 917 414
415
Quad4 211 0 16 1 919 918 415
416
Quad4 212 0 16 1 920 919 416
437
Quad4 213 0 16 1 921 920 437

438
Quad4 214 0 16 1 922 921 438
439
Quad4 215 0 16 1 923 922 439
440
Quad4 216 0 16 1 924 923 440
417
Quad4 217 0 16 1 925 924 417
418
Quad4 218 0 16 1 926 925 418
433
Quad4 219 0 16 1 927 926 433
434
Quad4 220 0 16 1 928 927 434
435
Quad4 221 0 16 1 929 928 435
436
Quad4 222 0 16 1 930 929 436
419
Quad4 223 0 16 1 931 930 419
420
Quad4 224 0 16 1 932 931 420
432
Quad4 225 0 16 1 1 346 933
934
Quad4 226 0 16 1 368 1 934
935
Quad4 227 0 16 1 2 347 936
937
Quad4 228 0 16 1 347 371 938
936
Quad4 229 0 16 1 371 370 939
938
Quad4 230 0 16 1 370 369 940
939
Quad4 231 0 16 1 369 368 935
940
Quad4 232 0 16 1 390 2 937
941
Quad4 233 0 16 1 391 390 941
942
Quad4 234 0 16 1 392 391 942
943
Quad4 235 0 16 1 348 392 943
944
Quad4 236 0 16 1 349 348 944
945
Quad4 237 0 16 1 3 349 945
946
Quad4 238 0 16 1 372 3 946
947
Quad4 239 0 16 1 373 372 947
948
Quad4 240 0 16 1 374 373 948

949
Quad4 241 0 16 1 375 374 949
950
Quad4 242 0 16 1 350 375 950
951
Quad4 243 0 16 1 4 350 951
952
Quad4 244 0 16 1 376 4 952
953
Quad4 245 0 16 1 377 376 953
954
Quad4 246 0 16 1 378 377 954
955
Quad4 247 0 16 1 379 378 955
956
Quad4 248 0 16 1 351 379 956
957
Quad4 249 0 16 1 5 351 957
958
Quad4 250 0 16 1 380 5 958
959
Quad4 251 0 16 1 381 380 959
960
Quad4 252 0 16 1 382 381 960
961
Quad4 253 0 16 1 383 382 961
962
Quad4 254 0 16 1 352 383 962
963
Quad4 255 0 16 1 6 352 963
964
Quad4 256 0 16 1 384 6 964
965
Quad4 257 0 16 1 385 384 965
966
Quad4 258 0 16 1 386 385 966
967
Quad4 259 0 16 1 387 386 967
968
Quad4 260 0 16 1 353 387 968
969
Quad4 261 0 16 1 7 353 969
970
Quad4 262 0 16 1 388 7 970
971
Quad4 263 0 16 1 389 388 971
972
Quad4 264 0 16 1 354 389 972
973
Quad4 265 0 16 1 355 354 973
974
Quad4 266 0 16 1 356 355 974
975
Quad4 267 0 16 1 8 356 975

976
Quad4 268 0 16 1 364 8 976
977
Quad4 269 0 16 1 365 364 977
978
Quad4 270 0 16 1 366 365 978
979
Quad4 271 0 16 1 367 366 979
980
Quad4 272 0 16 1 357 367 980
981
Quad4 273 0 16 1 9 357 981
982
Quad4 274 0 16 1 360 9 982
983
Quad4 275 0 16 1 361 360 983
984
Quad4 276 0 16 1 362 361 984
985
Quad4 277 0 16 1 363 362 985
986
Quad4 278 0 16 1 358 363 986
987
Quad4 279 0 16 1 10 358 987
988
Quad4 280 0 16 1 359 10 988
989
Quad4 281 0 15 1 990 991 546
545
Quad4 282 0 15 1 992 990 545
577
Quad4 283 0 15 1 993 994 548
547
Quad4 284 0 15 1 994 995 580
548
Quad4 285 0 15 1 995 996 579
580
Quad4 286 0 15 1 996 997 578
579
Quad4 287 0 15 1 997 992 577
578
Quad4 288 0 15 1 998 993 547
599
Quad4 289 0 15 1 999 998 599
600
Quad4 290 0 15 1 1000 999 600
601
Quad4 291 0 15 1 1001 1000 601
550
Quad4 292 0 15 1 1002 1001 550
549
Quad4 293 0 15 1 1003 1002 549
551
Quad4 294 0 15 1 1004 1003 551

581
Quad4 295 0 15 1 1005 1004 581
582
Quad4 296 0 15 1 1006 1005 582
583
Quad4 297 0 15 1 1007 1006 583
584
Quad4 298 0 15 1 1008 1007 584
553
Quad4 299 0 15 1 1009 1008 553
552
Quad4 300 0 15 1 1010 1009 552
585
Quad4 301 0 15 1 1011 1010 585
586
Quad4 302 0 15 1 1012 1011 586
587
Quad4 303 0 15 1 1013 1012 587
588
Quad4 304 0 15 1 1014 1013 588
555
Quad4 305 0 15 1 1015 1014 555
554
Quad4 306 0 15 1 1016 1015 554
589
Quad4 307 0 15 1 1017 1016 589
590
Quad4 308 0 15 1 1018 1017 590
591
Quad4 309 0 15 1 1019 1018 591
592
Quad4 310 0 15 1 1020 1019 592
557
Quad4 311 0 15 1 1021 1020 557
556
Quad4 312 0 15 1 1022 1021 556
593
Quad4 313 0 15 1 1023 1022 593
594
Quad4 314 0 15 1 1024 1023 594
595
Quad4 315 0 15 1 1025 1024 595
596
Quad4 316 0 15 1 1026 1025 596
559
Quad4 317 0 15 1 1027 1026 559
558
Quad4 318 0 15 1 1028 1027 558
597
Quad4 319 0 15 1 1029 1028 597
598
Quad4 320 0 15 1 1030 1029 598
561
Quad4 321 0 15 1 1031 1030 561

```
 560
   Quad4                  322       0      15       1    1032    1031     560
 563
   Quad4                  323       0      15       1    1033    1032     563
 562
   Quad4                  324       0      15       1    1034    1033     562
 573
   Quad4                  325       0      15       1    1035    1034     573
 574
   Quad4                  326       0      15       1    1036    1035     574
 575
   Quad4                  327       0      15       1    1037    1036     575
 576
   Quad4                  328       0      15       1    1038    1037     576
 565
   Quad4                  329       0      15       1    1039    1038     565
 564
   Quad4                  330       0      15       1    1040    1039     564
 569
   Quad4                  331       0      15       1    1041    1040     569
 570
   Quad4                  332       0      15       1    1042    1041     570
 571
   Quad4                  333       0      15       1    1043    1042     571
 572
   Quad4                  334       0      15       1    1044    1043     572
 567
   Quad4                  335       0      15       1    1045    1044     567
 566
   Quad4                  336       0      15       1    1046    1045     566
 568

/ ____________________________________________________________________________
/ PLATE PATCH TYPES

   PlPatchType              1       2       8     0.00000000000000E+0
0.00000000000000E+0      0.00000000000000E+0      0.00000000000000E+0
   PlPatchType              2       2       8     0.00000000000000E+0
0.00000000000000E+0      0.00000000000000E+0      0.00000000000000E+0
   PlPatchType              3       2       8     0.00000000000000E+0
0.00000000000000E+0      0.00000000000000E+0      0.00000000000000E+0
   PlPatchType              4       2       8     0.00000000000000E+0
0.00000000000000E+0      0.00000000000000E+0      0.00000000000000E+0
   PlPatchType              5       2       8     0.00000000000000E+0
0.00000000000000E+0      0.00000000000000E+0      0.00000000000000E+0
   PlPatchType              6       2       8     0.00000000000000E+0
0.00000000000000E+0      0.00000000000000E+0      0.00000000000000E+0
   PlPatchType              7       2       8     0.00000000000000E+0
0.00000000000000E+0      0.00000000000000E+0      0.00000000000000E+0
   PlPatchType              8       2       8     0.00000000000000E+0
0.00000000000000E+0      0.00000000000000E+0      0.00000000000000E+0
   PlPatchType              9       2       8     0.00000000000000E+0
0.00000000000000E+0      0.00000000000000E+0      0.00000000000000E+0
   PlPatchType             10       2       8     0.00000000000000E+0
```

0.00000000000000E+0	0.00000000000000E+0			0.00000000000000E+0
PlPatchType	11	2	8	0.00000000000000E+0
0.00000000000000E+0	0.00000000000000E+0			0.00000000000000E+0
PlPatchType	12	2	8	0.00000000000000E+0
0.00000000000000E+0	0.00000000000000E+0			0.00000000000000E+0
PlPatchType	13	2	8	0.00000000000000E+0
0.00000000000000E+0	0.00000000000000E+0			0.00000000000000E+0
PlPatchType	14	2	8	0.00000000000000E+0
0.00000000000000E+0	0.00000000000000E+0			0.00000000000000E+0
PlPatchType	15	2	8	0.00000000000000E+0
0.00000000000000E+0	0.00000000000000E+0			0.00000000000000E+0
PlPatchType	16	2	8	0.00000000000000E+0
0.00000000000000E+0	0.00000000000000E+0			0.00000000000000E+0
PlPatchType	17	2	8	0.00000000000000E+0
0.00000000000000E+0	0.00000000000000E+0			0.00000000000000E+0
PlPatchType	18	2	8	0.00000000000000E+0
0.00000000000000E+0	0.00000000000000E+0			0.00000000000000E+0
PlPatchType	19	2	8	0.00000000000000E+0
0.00000000000000E+0	0.00000000000000E+0			0.00000000000000E+0
PlPatchType	20	2	8	0.00000000000000E+0
0.00000000000000E+0	0.00000000000000E+0			0.00000000000000E+0
PlPatchType	21	2	8	0.00000000000000E+0
0.00000000000000E+0	0.00000000000000E+0			0.00000000000000E+0
PlPatchType	22	2	8	0.00000000000000E+0
0.00000000000000E+0	0.00000000000000E+0			0.00000000000000E+0
PlPatchType	23	2	8	0.00000000000000E+0
0.00000000000000E+0	0.00000000000000E+0			0.00000000000000E+0
PlPatchType	24	2	8	0.00000000000000E+0
0.00000000000000E+0	0.00000000000000E+0			0.00000000000000E+0
PlPatchType	25	2	8	0.00000000000000E+0
0.00000000000000E+0	0.00000000000000E+0			0.00000000000000E+0
PlPatchType	26	2	8	0.00000000000000E+0
0.00000000000000E+0	0.00000000000000E+0			0.00000000000000E+0
PlPatchType	27	2	8	0.00000000000000E+0
0.00000000000000E+0	0.00000000000000E+0			0.00000000000000E+0
PlPatchType	28	2	8	0.00000000000000E+0
0.00000000000000E+0	0.00000000000000E+0			0.00000000000000E+0
PlPatchType	29	2	8	0.00000000000000E+0
0.00000000000000E+0	0.00000000000000E+0			0.00000000000000E+0
PlPatchType	30	2	8	0.00000000000000E+0
0.00000000000000E+0	0.00000000000000E+0			0.00000000000000E+0
PlPatchType	31	2	8	0.00000000000000E+0
0.00000000000000E+0	0.00000000000000E+0			0.00000000000000E+0
PlPatchType	32	2	8	0.00000000000000E+0
0.00000000000000E+0	0.00000000000000E+0			0.00000000000000E+0
PlPatchType	33	2	8	0.00000000000000E+0
0.00000000000000E+0	0.00000000000000E+0			0.00000000000000E+0
PlPatchType	34	2	8	0.00000000000000E+0
0.00000000000000E+0	0.00000000000000E+0			0.00000000000000E+0
PlPatchType	35	2	8	0.00000000000000E+0
0.00000000000000E+0	0.00000000000000E+0			0.00000000000000E+0
PlPatchType	36	2	8	0.00000000000000E+0
0.00000000000000E+0	0.00000000000000E+0			0.00000000000000E+0
PlPatchType	37	2	8	0.00000000000000E+0

0.00000000000000E+0	0.00000000000000E+0			0.00000000000000E+0
PlPatchType	38	2	8	0.00000000000000E+0
0.00000000000000E+0	0.00000000000000E+0			0.00000000000000E+0
PlPatchType	39	2	8	0.00000000000000E+0
0.00000000000000E+0	0.00000000000000E+0			0.00000000000000E+0
PlPatchType	40	2	8	0.00000000000000E+0
0.00000000000000E+0	0.00000000000000E+0			0.00000000000000E+0
PlPatchType	41	2	8	0.00000000000000E+0
0.00000000000000E+0	0.00000000000000E+0			0.00000000000000E+0
PlPatchType	42	2	8	0.00000000000000E+0
0.00000000000000E+0	0.00000000000000E+0			0.00000000000000E+0
PlPatchType	43	2	8	0.00000000000000E+0
0.00000000000000E+0	0.00000000000000E+0			0.00000000000000E+0
PlPatchType	44	2	8	0.00000000000000E+0
0.00000000000000E+0	0.00000000000000E+0			0.00000000000000E+0
PlPatchType	45	2	8	0.00000000000000E+0
0.00000000000000E+0	0.00000000000000E+0			0.00000000000000E+0
PlPatchType	46	2	8	0.00000000000000E+0
0.00000000000000E+0	0.00000000000000E+0			0.00000000000000E+0
PlPatchType	47	2	8	0.00000000000000E+0
0.00000000000000E+0	0.00000000000000E+0			0.00000000000000E+0
PlPatchType	48	2	8	0.00000000000000E+0
0.00000000000000E+0	0.00000000000000E+0			0.00000000000000E+0
PlPatchType	49	2	8	0.00000000000000E+0
0.00000000000000E+0	0.00000000000000E+0			0.00000000000000E+0
PlPatchType	50	2	8	0.00000000000000E+0
0.00000000000000E+0	0.00000000000000E+0			0.00000000000000E+0
PlPatchType	51	2	8	0.00000000000000E+0
0.00000000000000E+0	0.00000000000000E+0			0.00000000000000E+0
PlPatchType	52	2	8	0.00000000000000E+0
0.00000000000000E+0	0.00000000000000E+0			0.00000000000000E+0
PlPatchType	53	2	8	0.00000000000000E+0
0.00000000000000E+0	0.00000000000000E+0			0.00000000000000E+0
PlPatchType	54	2	8	0.00000000000000E+0
0.00000000000000E+0	0.00000000000000E+0			0.00000000000000E+0
PlPatchType	55	2	8	0.00000000000000E+0
0.00000000000000E+0	0.00000000000000E+0			0.00000000000000E+0
PlPatchType	56	2	8	0.00000000000000E+0
0.00000000000000E+0	0.00000000000000E+0			0.00000000000000E+0
PlPatchType	57	2	8	0.00000000000000E+0
0.00000000000000E+0	0.00000000000000E+0			0.00000000000000E+0
PlPatchType	58	2	8	0.00000000000000E+0
0.00000000000000E+0	0.00000000000000E+0			0.00000000000000E+0
PlPatchType	59	2	8	0.00000000000000E+0
0.00000000000000E+0	0.00000000000000E+0			0.00000000000000E+0
PlPatchType	60	2	8	0.00000000000000E+0
0.00000000000000E+0	0.00000000000000E+0			0.00000000000000E+0
PlPatchType	61	2	8	0.00000000000000E+0
0.00000000000000E+0	0.00000000000000E+0			0.00000000000000E+0
PlPatchType	62	2	8	0.00000000000000E+0
0.00000000000000E+0	0.00000000000000E+0			0.00000000000000E+0
PlPatchType	63	2	8	0.00000000000000E+0
0.00000000000000E+0	0.00000000000000E+0			0.00000000000000E+0
PlPatchType	64	2	8	0.00000000000000E+0

0.00000000000000E+0	0.00000000000000E+0			0.00000000000000E+0
PlPatchType	65	2	8	0.00000000000000E+0
0.00000000000000E+0	0.00000000000000E+0			0.00000000000000E+0
PlPatchType	66	2	8	0.00000000000000E+0
0.00000000000000E+0	0.00000000000000E+0			0.00000000000000E+0
PlPatchType	67	2	8	0.00000000000000E+0
0.00000000000000E+0	0.00000000000000E+0			0.00000000000000E+0
PlPatchType	68	2	8	0.00000000000000E+0
0.00000000000000E+0	0.00000000000000E+0			0.00000000000000E+0
PlPatchType	69	2	8	0.00000000000000E+0
0.00000000000000E+0	0.00000000000000E+0			0.00000000000000E+0
PlPatchType	70	2	8	0.00000000000000E+0
0.00000000000000E+0	0.00000000000000E+0			0.00000000000000E+0
PlPatchType	71	2	8	0.00000000000000E+0
0.00000000000000E+0	0.00000000000000E+0			0.00000000000000E+0
PlPatchType	72	2	8	0.00000000000000E+0
0.00000000000000E+0	0.00000000000000E+0			0.00000000000000E+0
PlPatchType	73	2	8	0.00000000000000E+0
0.00000000000000E+0	0.00000000000000E+0			0.00000000000000E+0
PlPatchType	74	2	8	0.00000000000000E+0
0.00000000000000E+0	0.00000000000000E+0			0.00000000000000E+0
PlPatchType	75	2	8	0.00000000000000E+0
0.00000000000000E+0	0.00000000000000E+0			0.00000000000000E+0
PlPatchType	76	2	8	0.00000000000000E+0
0.00000000000000E+0	0.00000000000000E+0			0.00000000000000E+0
PlPatchType	77	2	8	0.00000000000000E+0
0.00000000000000E+0	0.00000000000000E+0			0.00000000000000E+0
PlPatchType	78	2	8	0.00000000000000E+0
0.00000000000000E+0	0.00000000000000E+0			0.00000000000000E+0
PlPatchType	79	2	8	0.00000000000000E+0
0.00000000000000E+0	0.00000000000000E+0			0.00000000000000E+0
PlPatchType	80	2	8	0.00000000000000E+0
0.00000000000000E+0	0.00000000000000E+0			0.00000000000000E+0
PlPatchType	81	2	8	0.00000000000000E+0
0.00000000000000E+0	0.00000000000000E+0			0.00000000000000E+0
PlPatchType	82	2	8	0.00000000000000E+0
0.00000000000000E+0	0.00000000000000E+0			0.00000000000000E+0
PlPatchType	83	2	8	0.00000000000000E+0
0.00000000000000E+0	0.00000000000000E+0			0.00000000000000E+0
PlPatchType	84	2	8	0.00000000000000E+0
0.00000000000000E+0	0.00000000000000E+0			0.00000000000000E+0
PlPatchType	85	2	8	0.00000000000000E+0
0.00000000000000E+0	0.00000000000000E+0			0.00000000000000E+0
PlPatchType	86	2	8	0.00000000000000E+0
0.00000000000000E+0	0.00000000000000E+0			0.00000000000000E+0
PlPatchType	87	2	8	0.00000000000000E+0
0.00000000000000E+0	0.00000000000000E+0			0.00000000000000E+0
PlPatchType	88	2	8	0.00000000000000E+0
0.00000000000000E+0	0.00000000000000E+0			0.00000000000000E+0
PlPatchType	89	2	8	0.00000000000000E+0
0.00000000000000E+0	0.00000000000000E+0			0.00000000000000E+0
PlPatchType	90	2	8	0.00000000000000E+0
0.00000000000000E+0	0.00000000000000E+0			0.00000000000000E+0
PlPatchType	91	2	8	0.00000000000000E+0

0.00000000000000E+0	0.00000000000000E+0			0.00000000000000E+0
PlPatchType	92	2	8	0.00000000000000E+0
0.00000000000000E+0	0.00000000000000E+0			0.00000000000000E+0
PlPatchType	93	2	8	0.00000000000000E+0
0.00000000000000E+0	0.00000000000000E+0			0.00000000000000E+0
PlPatchType	94	2	8	0.00000000000000E+0
0.00000000000000E+0	0.00000000000000E+0			0.00000000000000E+0
PlPatchType	95	2	8	0.00000000000000E+0
0.00000000000000E+0	0.00000000000000E+0			0.00000000000000E+0
PlPatchType	96	2	8	0.00000000000000E+0
0.00000000000000E+0	0.00000000000000E+0			0.00000000000000E+0
PlPatchType	97	2	8	0.00000000000000E+0
0.00000000000000E+0	0.00000000000000E+0			0.00000000000000E+0
PlPatchType	98	2	8	0.00000000000000E+0
0.00000000000000E+0	0.00000000000000E+0			0.00000000000000E+0
PlPatchType	99	2	8	0.00000000000000E+0
0.00000000000000E+0	0.00000000000000E+0			0.00000000000000E+0
PlPatchType	100	2	8	0.00000000000000E+0
0.00000000000000E+0	0.00000000000000E+0			0.00000000000000E+0
PlPatchType	101	2	8	0.00000000000000E+0
0.00000000000000E+0	0.00000000000000E+0			0.00000000000000E+0
PlPatchType	102	2	8	0.00000000000000E+0
0.00000000000000E+0	0.00000000000000E+0			0.00000000000000E+0
PlPatchType	103	2	8	0.00000000000000E+0
0.00000000000000E+0	0.00000000000000E+0			0.00000000000000E+0
PlPatchType	104	2	8	0.00000000000000E+0
0.00000000000000E+0	0.00000000000000E+0			0.00000000000000E+0
PlPatchType	105	2	8	0.00000000000000E+0
0.00000000000000E+0	0.00000000000000E+0			0.00000000000000E+0
PlPatchType	106	2	8	0.00000000000000E+0
0.00000000000000E+0	0.00000000000000E+0			0.00000000000000E+0
PlPatchType	107	2	8	0.00000000000000E+0
0.00000000000000E+0	0.00000000000000E+0			0.00000000000000E+0
PlPatchType	108	2	8	0.00000000000000E+0
0.00000000000000E+0	0.00000000000000E+0			0.00000000000000E+0
PlPatchType	109	2	8	0.00000000000000E+0
0.00000000000000E+0	0.00000000000000E+0			0.00000000000000E+0
PlPatchType	110	2	8	0.00000000000000E+0
0.00000000000000E+0	0.00000000000000E+0			0.00000000000000E+0
PlPatchType	111	2	8	0.00000000000000E+0
0.00000000000000E+0	0.00000000000000E+0			0.00000000000000E+0
PlPatchType	112	2	8	0.00000000000000E+0
0.00000000000000E+0	0.00000000000000E+0			0.00000000000000E+0
PlPatchType	113	5	0	1.00000000000000E+0
0.00000000000000E+0	0.00000000000000E+0			0.00000000000000E+0
PlPatchType	114	5	0	1.00000000000000E+0
0.00000000000000E+0	0.00000000000000E+0			0.00000000000000E+0
PlPatchType	115	5	0	1.00000000000000E+0
0.00000000000000E+0	0.00000000000000E+0			0.00000000000000E+0
PlPatchType	116	5	0	1.00000000000000E+0
0.00000000000000E+0	0.00000000000000E+0			0.00000000000000E+0
PlPatchType	117	5	0	1.00000000000000E+0
0.00000000000000E+0	0.00000000000000E+0			0.00000000000000E+0
PlPatchType	118	5	0	1.00000000000000E+0

0.00000000000000E+0	0.00000000000000E+0			0.00000000000000E+0
PlPatchType	119	5	0	1.00000000000000E+0
0.00000000000000E+0	0.00000000000000E+0			0.00000000000000E+0
PlPatchType	120	5	0	1.00000000000000E+0
0.00000000000000E+0	0.00000000000000E+0			0.00000000000000E+0
PlPatchType	121	5	0	1.00000000000000E+0
0.00000000000000E+0	0.00000000000000E+0			0.00000000000000E+0
PlPatchType	122	5	0	1.00000000000000E+0
0.00000000000000E+0	0.00000000000000E+0			0.00000000000000E+0
PlPatchType	123	5	0	1.00000000000000E+0
0.00000000000000E+0	0.00000000000000E+0			0.00000000000000E+0
PlPatchType	124	5	0	1.00000000000000E+0
0.00000000000000E+0	0.00000000000000E+0			0.00000000000000E+0
PlPatchType	125	5	0	1.00000000000000E+0
0.00000000000000E+0	0.00000000000000E+0			0.00000000000000E+0
PlPatchType	126	5	0	1.00000000000000E+0
0.00000000000000E+0	0.00000000000000E+0			0.00000000000000E+0
PlPatchType	127	5	0	1.00000000000000E+0
0.00000000000000E+0	0.00000000000000E+0			0.00000000000000E+0
PlPatchType	128	5	0	1.00000000000000E+0
0.00000000000000E+0	0.00000000000000E+0			0.00000000000000E+0
PlPatchType	129	5	0	1.00000000000000E+0
0.00000000000000E+0	0.00000000000000E+0			0.00000000000000E+0
PlPatchType	130	5	0	1.00000000000000E+0
0.00000000000000E+0	0.00000000000000E+0			0.00000000000000E+0
PlPatchType	131	5	0	1.00000000000000E+0
0.00000000000000E+0	0.00000000000000E+0			0.00000000000000E+0
PlPatchType	132	5	0	1.00000000000000E+0
0.00000000000000E+0	0.00000000000000E+0			0.00000000000000E+0
PlPatchType	133	5	0	1.00000000000000E+0
0.00000000000000E+0	0.00000000000000E+0			0.00000000000000E+0
PlPatchType	134	5	0	1.00000000000000E+0
0.00000000000000E+0	0.00000000000000E+0			0.00000000000000E+0
PlPatchType	135	5	0	1.00000000000000E+0
0.00000000000000E+0	0.00000000000000E+0			0.00000000000000E+0
PlPatchType	136	5	0	1.00000000000000E+0
0.00000000000000E+0	0.00000000000000E+0			0.00000000000000E+0
PlPatchType	137	5	0	1.00000000000000E+0
0.00000000000000E+0	0.00000000000000E+0			0.00000000000000E+0
PlPatchType	138	5	0	1.00000000000000E+0
0.00000000000000E+0	0.00000000000000E+0			0.00000000000000E+0
PlPatchType	139	5	0	1.00000000000000E+0
0.00000000000000E+0	0.00000000000000E+0			0.00000000000000E+0
PlPatchType	140	5	0	1.00000000000000E+0
0.00000000000000E+0	0.00000000000000E+0			0.00000000000000E+0
PlPatchType	141	5	0	1.00000000000000E+0
0.00000000000000E+0	0.00000000000000E+0			0.00000000000000E+0
PlPatchType	142	5	0	1.00000000000000E+0
0.00000000000000E+0	0.00000000000000E+0			0.00000000000000E+0
PlPatchType	143	5	0	1.00000000000000E+0
0.00000000000000E+0	0.00000000000000E+0			0.00000000000000E+0
PlPatchType	144	5	0	1.00000000000000E+0
0.00000000000000E+0	0.00000000000000E+0			0.00000000000000E+0
PlPatchType	145	5	0	1.00000000000000E+0

0.00000000000000E+0	0.00000000000000E+0			0.00000000000000E+0
PlPatchType	146	5	0	1.00000000000000E+0
0.00000000000000E+0	0.00000000000000E+0			0.00000000000000E+0
PlPatchType	147	5	0	1.00000000000000E+0
0.00000000000000E+0	0.00000000000000E+0			0.00000000000000E+0
PlPatchType	148	5	0	1.00000000000000E+0
0.00000000000000E+0	0.00000000000000E+0			0.00000000000000E+0
PlPatchType	149	5	0	1.00000000000000E+0
0.00000000000000E+0	0.00000000000000E+0			0.00000000000000E+0
PlPatchType	150	5	0	1.00000000000000E+0
0.00000000000000E+0	0.00000000000000E+0			0.00000000000000E+0
PlPatchType	151	5	0	1.00000000000000E+0
0.00000000000000E+0	0.00000000000000E+0			0.00000000000000E+0
PlPatchType	152	5	0	1.00000000000000E+0
0.00000000000000E+0	0.00000000000000E+0			0.00000000000000E+0
PlPatchType	153	5	0	1.00000000000000E+0
0.00000000000000E+0	0.00000000000000E+0			0.00000000000000E+0
PlPatchType	154	5	0	1.00000000000000E+0
0.00000000000000E+0	0.00000000000000E+0			0.00000000000000E+0
PlPatchType	155	5	0	1.00000000000000E+0
0.00000000000000E+0	0.00000000000000E+0			0.00000000000000E+0
PlPatchType	156	5	0	1.00000000000000E+0
0.00000000000000E+0	0.00000000000000E+0			0.00000000000000E+0
PlPatchType	157	5	0	1.00000000000000E+0
0.00000000000000E+0	0.00000000000000E+0			0.00000000000000E+0
PlPatchType	158	5	0	1.00000000000000E+0
0.00000000000000E+0	0.00000000000000E+0			0.00000000000000E+0
PlPatchType	159	5	0	1.00000000000000E+0
0.00000000000000E+0	0.00000000000000E+0			0.00000000000000E+0
PlPatchType	160	5	0	1.00000000000000E+0
0.00000000000000E+0	0.00000000000000E+0			0.00000000000000E+0
PlPatchType	161	5	0	1.00000000000000E+0
0.00000000000000E+0	0.00000000000000E+0			0.00000000000000E+0
PlPatchType	162	5	0	1.00000000000000E+0
0.00000000000000E+0	0.00000000000000E+0			0.00000000000000E+0
PlPatchType	163	5	0	1.00000000000000E+0
0.00000000000000E+0	0.00000000000000E+0			0.00000000000000E+0
PlPatchType	164	5	0	1.00000000000000E+0
0.00000000000000E+0	0.00000000000000E+0			0.00000000000000E+0
PlPatchType	165	5	0	1.00000000000000E+0
0.00000000000000E+0	0.00000000000000E+0			0.00000000000000E+0
PlPatchType	166	5	0	1.00000000000000E+0
0.00000000000000E+0	0.00000000000000E+0			0.00000000000000E+0
PlPatchType	167	5	0	1.00000000000000E+0
0.00000000000000E+0	0.00000000000000E+0			0.00000000000000E+0
PlPatchType	168	5	0	1.00000000000000E+0
0.00000000000000E+0	0.00000000000000E+0			0.00000000000000E+0
PlPatchType	169	5	0	0.00000000000000E+0
0.00000000000000E+0	1.00000000000000E+0			0.00000000000000E+0
PlPatchType	170	5	0	0.00000000000000E+0
0.00000000000000E+0	1.00000000000000E+0			0.00000000000000E+0
PlPatchType	171	5	0	0.00000000000000E+0
0.00000000000000E+0	1.00000000000000E+0			0.00000000000000E+0
PlPatchType	172	5	0	0.00000000000000E+0

0.00000000000000E+0	1.00000000000000E+0			0.00000000000000E+0
PlPatchType	173	5	0	0.00000000000000E+0
0.00000000000000E+0	1.00000000000000E+0			0.00000000000000E+0
PlPatchType	174	5	0	0.00000000000000E+0
0.00000000000000E+0	1.00000000000000E+0			0.00000000000000E+0
PlPatchType	175	5	0	0.00000000000000E+0
0.00000000000000E+0	1.00000000000000E+0			0.00000000000000E+0
PlPatchType	176	5	0	0.00000000000000E+0
0.00000000000000E+0	1.00000000000000E+0			0.00000000000000E+0
PlPatchType	177	5	0	0.00000000000000E+0
0.00000000000000E+0	1.00000000000000E+0			0.00000000000000E+0
PlPatchType	178	5	0	0.00000000000000E+0
0.00000000000000E+0	1.00000000000000E+0			0.00000000000000E+0
PlPatchType	179	5	0	0.00000000000000E+0
0.00000000000000E+0	1.00000000000000E+0			0.00000000000000E+0
PlPatchType	180	5	0	0.00000000000000E+0
0.00000000000000E+0	1.00000000000000E+0			0.00000000000000E+0
PlPatchType	181	5	0	0.00000000000000E+0
0.00000000000000E+0	1.00000000000000E+0			0.00000000000000E+0
PlPatchType	182	5	0	0.00000000000000E+0
0.00000000000000E+0	1.00000000000000E+0			0.00000000000000E+0
PlPatchType	183	5	0	0.00000000000000E+0
0.00000000000000E+0	1.00000000000000E+0			0.00000000000000E+0
PlPatchType	184	5	0	0.00000000000000E+0
0.00000000000000E+0	1.00000000000000E+0			0.00000000000000E+0
PlPatchType	185	5	0	0.00000000000000E+0
0.00000000000000E+0	1.00000000000000E+0			0.00000000000000E+0
PlPatchType	186	5	0	0.00000000000000E+0
0.00000000000000E+0	1.00000000000000E+0			0.00000000000000E+0
PlPatchType	187	5	0	0.00000000000000E+0
0.00000000000000E+0	1.00000000000000E+0			0.00000000000000E+0
PlPatchType	188	5	0	0.00000000000000E+0
0.00000000000000E+0	1.00000000000000E+0			0.00000000000000E+0
PlPatchType	189	5	0	0.00000000000000E+0
0.00000000000000E+0	1.00000000000000E+0			0.00000000000000E+0
PlPatchType	190	5	0	0.00000000000000E+0
0.00000000000000E+0	1.00000000000000E+0			0.00000000000000E+0
PlPatchType	191	5	0	0.00000000000000E+0
0.00000000000000E+0	1.00000000000000E+0			0.00000000000000E+0
PlPatchType	192	5	0	0.00000000000000E+0
0.00000000000000E+0	1.00000000000000E+0			0.00000000000000E+0
PlPatchType	193	5	0	0.00000000000000E+0
0.00000000000000E+0	1.00000000000000E+0			0.00000000000000E+0
PlPatchType	194	5	0	0.00000000000000E+0
0.00000000000000E+0	1.00000000000000E+0			0.00000000000000E+0
PlPatchType	195	5	0	0.00000000000000E+0
0.00000000000000E+0	1.00000000000000E+0			0.00000000000000E+0
PlPatchType	196	5	0	0.00000000000000E+0
0.00000000000000E+0	1.00000000000000E+0			0.00000000000000E+0
PlPatchType	197	5	0	0.00000000000000E+0
0.00000000000000E+0	1.00000000000000E+0			0.00000000000000E+0
PlPatchType	198	5	0	0.00000000000000E+0
0.00000000000000E+0	1.00000000000000E+0			0.00000000000000E+0
PlPatchType	199	5	0	0.00000000000000E+0

0.00000000000000E+0	1.00000000000000E+0			0.00000000000000E+0
PlPatchType	200	5	0	0.00000000000000E+0
0.00000000000000E+0	1.00000000000000E+0			0.00000000000000E+0
PlPatchType	201	5	0	0.00000000000000E+0
0.00000000000000E+0	1.00000000000000E+0			0.00000000000000E+0
PlPatchType	202	5	0	0.00000000000000E+0
0.00000000000000E+0	1.00000000000000E+0			0.00000000000000E+0
PlPatchType	203	5	0	0.00000000000000E+0
0.00000000000000E+0	1.00000000000000E+0			0.00000000000000E+0
PlPatchType	204	5	0	0.00000000000000E+0
0.00000000000000E+0	1.00000000000000E+0			0.00000000000000E+0
PlPatchType	205	5	0	0.00000000000000E+0
0.00000000000000E+0	1.00000000000000E+0			0.00000000000000E+0
PlPatchType	206	5	0	0.00000000000000E+0
0.00000000000000E+0	1.00000000000000E+0			0.00000000000000E+0
PlPatchType	207	5	0	0.00000000000000E+0
0.00000000000000E+0	1.00000000000000E+0			0.00000000000000E+0
PlPatchType	208	5	0	0.00000000000000E+0
0.00000000000000E+0	1.00000000000000E+0			0.00000000000000E+0
PlPatchType	209	5	0	0.00000000000000E+0
0.00000000000000E+0	1.00000000000000E+0			0.00000000000000E+0
PlPatchType	210	5	0	0.00000000000000E+0
0.00000000000000E+0	1.00000000000000E+0			0.00000000000000E+0
PlPatchType	211	5	0	0.00000000000000E+0
0.00000000000000E+0	1.00000000000000E+0			0.00000000000000E+0
PlPatchType	212	5	0	0.00000000000000E+0
0.00000000000000E+0	1.00000000000000E+0			0.00000000000000E+0
PlPatchType	213	5	0	0.00000000000000E+0
0.00000000000000E+0	1.00000000000000E+0			0.00000000000000E+0
PlPatchType	214	5	0	0.00000000000000E+0
0.00000000000000E+0	1.00000000000000E+0			0.00000000000000E+0
PlPatchType	215	5	0	0.00000000000000E+0
0.00000000000000E+0	1.00000000000000E+0			0.00000000000000E+0
PlPatchType	216	5	0	0.00000000000000E+0
0.00000000000000E+0	1.00000000000000E+0			0.00000000000000E+0
PlPatchType	217	5	0	0.00000000000000E+0
0.00000000000000E+0	1.00000000000000E+0			0.00000000000000E+0
PlPatchType	218	5	0	0.00000000000000E+0
0.00000000000000E+0	1.00000000000000E+0			0.00000000000000E+0
PlPatchType	219	5	0	0.00000000000000E+0
0.00000000000000E+0	1.00000000000000E+0			0.00000000000000E+0
PlPatchType	220	5	0	0.00000000000000E+0
0.00000000000000E+0	1.00000000000000E+0			0.00000000000000E+0
PlPatchType	221	5	0	0.00000000000000E+0
0.00000000000000E+0	1.00000000000000E+0			0.00000000000000E+0
PlPatchType	222	5	0	0.00000000000000E+0
0.00000000000000E+0	1.00000000000000E+0			0.00000000000000E+0
PlPatchType	223	5	0	0.00000000000000E+0
0.00000000000000E+0	1.00000000000000E+0			0.00000000000000E+0
PlPatchType	224	5	0	0.00000000000000E+0
0.00000000000000E+0	1.00000000000000E+0			0.00000000000000E+0
PlPatchType	225	5	0	1.00000000000000E+0
0.00000000000000E+0	0.00000000000000E+0			0.00000000000000E+0
PlPatchType	226	5	0	1.00000000000000E+0

0.00000000000000E+0	0.00000000000000E+0			0.00000000000000E+0
PlPatchType	227	5	0	1.00000000000000E+0
0.00000000000000E+0	0.00000000000000E+0			0.00000000000000E+0
PlPatchType	228	5	0	1.00000000000000E+0
0.00000000000000E+0	0.00000000000000E+0			0.00000000000000E+0
PlPatchType	229	5	0	1.00000000000000E+0
0.00000000000000E+0	0.00000000000000E+0			0.00000000000000E+0
PlPatchType	230	5	0	1.00000000000000E+0
0.00000000000000E+0	0.00000000000000E+0			0.00000000000000E+0
PlPatchType	231	5	0	1.00000000000000E+0
0.00000000000000E+0	0.00000000000000E+0			0.00000000000000E+0
PlPatchType	232	5	0	1.00000000000000E+0
0.00000000000000E+0	0.00000000000000E+0			0.00000000000000E+0
PlPatchType	233	5	0	1.00000000000000E+0
0.00000000000000E+0	0.00000000000000E+0			0.00000000000000E+0
PlPatchType	234	5	0	1.00000000000000E+0
0.00000000000000E+0	0.00000000000000E+0			0.00000000000000E+0
PlPatchType	235	5	0	1.00000000000000E+0
0.00000000000000E+0	0.00000000000000E+0			0.00000000000000E+0
PlPatchType	236	5	0	1.00000000000000E+0
0.00000000000000E+0	0.00000000000000E+0			0.00000000000000E+0
PlPatchType	237	5	0	1.00000000000000E+0
0.00000000000000E+0	0.00000000000000E+0			0.00000000000000E+0
PlPatchType	238	5	0	1.00000000000000E+0
0.00000000000000E+0	0.00000000000000E+0			0.00000000000000E+0
PlPatchType	239	5	0	1.00000000000000E+0
0.00000000000000E+0	0.00000000000000E+0			0.00000000000000E+0
PlPatchType	240	5	0	1.00000000000000E+0
0.00000000000000E+0	0.00000000000000E+0			0.00000000000000E+0
PlPatchType	241	5	0	1.00000000000000E+0
0.00000000000000E+0	0.00000000000000E+0			0.00000000000000E+0
PlPatchType	242	5	0	1.00000000000000E+0
0.00000000000000E+0	0.00000000000000E+0			0.00000000000000E+0
PlPatchType	243	5	0	1.00000000000000E+0
0.00000000000000E+0	0.00000000000000E+0			0.00000000000000E+0
PlPatchType	244	5	0	1.00000000000000E+0
0.00000000000000E+0	0.00000000000000E+0			0.00000000000000E+0
PlPatchType	245	5	0	1.00000000000000E+0
0.00000000000000E+0	0.00000000000000E+0			0.00000000000000E+0
PlPatchType	246	5	0	1.00000000000000E+0
0.00000000000000E+0	0.00000000000000E+0			0.00000000000000E+0
PlPatchType	247	5	0	1.00000000000000E+0
0.00000000000000E+0	0.00000000000000E+0			0.00000000000000E+0
PlPatchType	248	5	0	1.00000000000000E+0
0.00000000000000E+0	0.00000000000000E+0			0.00000000000000E+0
PlPatchType	249	5	0	1.00000000000000E+0
0.00000000000000E+0	0.00000000000000E+0			0.00000000000000E+0
PlPatchType	250	5	0	1.00000000000000E+0
0.00000000000000E+0	0.00000000000000E+0			0.00000000000000E+0
PlPatchType	251	5	0	1.00000000000000E+0
0.00000000000000E+0	0.00000000000000E+0			0.00000000000000E+0
PlPatchType	252	5	0	1.00000000000000E+0
0.00000000000000E+0	0.00000000000000E+0			0.00000000000000E+0
PlPatchType	253	5	0	1.00000000000000E+0

0.00000000000000E+0	0.00000000000000E+0			0.00000000000000E+0
PlPatchType	254	5	0	1.00000000000000E+0
0.00000000000000E+0	0.00000000000000E+0			0.00000000000000E+0
PlPatchType	255	5	0	1.00000000000000E+0
0.00000000000000E+0	0.00000000000000E+0			0.00000000000000E+0
PlPatchType	256	5	0	1.00000000000000E+0
0.00000000000000E+0	0.00000000000000E+0			0.00000000000000E+0
PlPatchType	257	5	0	1.00000000000000E+0
0.00000000000000E+0	0.00000000000000E+0			0.00000000000000E+0
PlPatchType	258	5	0	1.00000000000000E+0
0.00000000000000E+0	0.00000000000000E+0			0.00000000000000E+0
PlPatchType	259	5	0	1.00000000000000E+0
0.00000000000000E+0	0.00000000000000E+0			0.00000000000000E+0
PlPatchType	260	5	0	1.00000000000000E+0
0.00000000000000E+0	0.00000000000000E+0			0.00000000000000E+0
PlPatchType	261	5	0	1.00000000000000E+0
0.00000000000000E+0	0.00000000000000E+0			0.00000000000000E+0
PlPatchType	262	5	0	1.00000000000000E+0
0.00000000000000E+0	0.00000000000000E+0			0.00000000000000E+0
PlPatchType	263	5	0	1.00000000000000E+0
0.00000000000000E+0	0.00000000000000E+0			0.00000000000000E+0
PlPatchType	264	5	0	1.00000000000000E+0
0.00000000000000E+0	0.00000000000000E+0			0.00000000000000E+0
PlPatchType	265	5	0	1.00000000000000E+0
0.00000000000000E+0	0.00000000000000E+0			0.00000000000000E+0
PlPatchType	266	5	0	1.00000000000000E+0
0.00000000000000E+0	0.00000000000000E+0			0.00000000000000E+0
PlPatchType	267	5	0	1.00000000000000E+0
0.00000000000000E+0	0.00000000000000E+0			0.00000000000000E+0
PlPatchType	268	5	0	1.00000000000000E+0
0.00000000000000E+0	0.00000000000000E+0			0.00000000000000E+0
PlPatchType	269	5	0	1.00000000000000E+0
0.00000000000000E+0	0.00000000000000E+0			0.00000000000000E+0
PlPatchType	270	5	0	1.00000000000000E+0
0.00000000000000E+0	0.00000000000000E+0			0.00000000000000E+0
PlPatchType	271	5	0	1.00000000000000E+0
0.00000000000000E+0	0.00000000000000E+0			0.00000000000000E+0
PlPatchType	272	5	0	1.00000000000000E+0
0.00000000000000E+0	0.00000000000000E+0			0.00000000000000E+0
PlPatchType	273	5	0	1.00000000000000E+0
0.00000000000000E+0	0.00000000000000E+0			0.00000000000000E+0
PlPatchType	274	5	0	1.00000000000000E+0
0.00000000000000E+0	0.00000000000000E+0			0.00000000000000E+0
PlPatchType	275	5	0	1.00000000000000E+0
0.00000000000000E+0	0.00000000000000E+0			0.00000000000000E+0
PlPatchType	276	5	0	1.00000000000000E+0
0.00000000000000E+0	0.00000000000000E+0			0.00000000000000E+0
PlPatchType	277	5	0	1.00000000000000E+0
0.00000000000000E+0	0.00000000000000E+0			0.00000000000000E+0
PlPatchType	278	5	0	1.00000000000000E+0
0.00000000000000E+0	0.00000000000000E+0			0.00000000000000E+0
PlPatchType	279	5	0	1.00000000000000E+0
0.00000000000000E+0	0.00000000000000E+0			0.00000000000000E+0
PlPatchType	280	5	0	1.00000000000000E+0

0.00000000000000E+0	0.00000000000000E+0			0.00000000000000E+0
PlPatchType	281	5	0	0.00000000000000E+0
0.00000000000000E+0	1.00000000000000E+0			0.00000000000000E+0
PlPatchType	282	5	0	0.00000000000000E+0
0.00000000000000E+0	1.00000000000000E+0			0.00000000000000E+0
PlPatchType	283	5	0	0.00000000000000E+0
0.00000000000000E+0	1.00000000000000E+0			0.00000000000000E+0
PlPatchType	284	5	0	0.00000000000000E+0
0.00000000000000E+0	1.00000000000000E+0			0.00000000000000E+0
PlPatchType	285	5	0	0.00000000000000E+0
0.00000000000000E+0	1.00000000000000E+0			0.00000000000000E+0
PlPatchType	286	5	0	0.00000000000000E+0
0.00000000000000E+0	1.00000000000000E+0			0.00000000000000E+0
PlPatchType	287	5	0	0.00000000000000E+0
0.00000000000000E+0	1.00000000000000E+0			0.00000000000000E+0
PlPatchType	288	5	0	0.00000000000000E+0
0.00000000000000E+0	1.00000000000000E+0			0.00000000000000E+0
PlPatchType	289	5	0	0.00000000000000E+0
0.00000000000000E+0	1.00000000000000E+0			0.00000000000000E+0
PlPatchType	290	5	0	0.00000000000000E+0
0.00000000000000E+0	1.00000000000000E+0			0.00000000000000E+0
PlPatchType	291	5	0	0.00000000000000E+0
0.00000000000000E+0	1.00000000000000E+0			0.00000000000000E+0
PlPatchType	292	5	0	0.00000000000000E+0
0.00000000000000E+0	1.00000000000000E+0			0.00000000000000E+0
PlPatchType	293	5	0	0.00000000000000E+0
0.00000000000000E+0	1.00000000000000E+0			0.00000000000000E+0
PlPatchType	294	5	0	0.00000000000000E+0
0.00000000000000E+0	1.00000000000000E+0			0.00000000000000E+0
PlPatchType	295	5	0	0.00000000000000E+0
0.00000000000000E+0	1.00000000000000E+0			0.00000000000000E+0
PlPatchType	296	5	0	0.00000000000000E+0
0.00000000000000E+0	1.00000000000000E+0			0.00000000000000E+0
PlPatchType	297	5	0	0.00000000000000E+0
0.00000000000000E+0	1.00000000000000E+0			0.00000000000000E+0
PlPatchType	298	5	0	0.00000000000000E+0
0.00000000000000E+0	1.00000000000000E+0			0.00000000000000E+0
PlPatchType	299	5	0	0.00000000000000E+0
0.00000000000000E+0	1.00000000000000E+0			0.00000000000000E+0
PlPatchType	300	5	0	0.00000000000000E+0
0.00000000000000E+0	1.00000000000000E+0			0.00000000000000E+0
PlPatchType	301	5	0	0.00000000000000E+0
0.00000000000000E+0	1.00000000000000E+0			0.00000000000000E+0
PlPatchType	302	5	0	0.00000000000000E+0
0.00000000000000E+0	1.00000000000000E+0			0.00000000000000E+0
PlPatchType	303	5	0	0.00000000000000E+0
0.00000000000000E+0	1.00000000000000E+0			0.00000000000000E+0
PlPatchType	304	5	0	0.00000000000000E+0
0.00000000000000E+0	1.00000000000000E+0			0.00000000000000E+0
PlPatchType	305	5	0	0.00000000000000E+0
0.00000000000000E+0	1.00000000000000E+0			0.00000000000000E+0
PlPatchType	306	5	0	0.00000000000000E+0
0.00000000000000E+0	1.00000000000000E+0			0.00000000000000E+0
PlPatchType	307	5	0	0.00000000000000E+0

0.00000000000000E+0	1.00000000000000E+0			0.00000000000000E+0
PlPatchType	308	5	0	0.00000000000000E+0
0.00000000000000E+0	1.00000000000000E+0			0.00000000000000E+0
PlPatchType	309	5	0	0.00000000000000E+0
0.00000000000000E+0	1.00000000000000E+0			0.00000000000000E+0
PlPatchType	310	5	0	0.00000000000000E+0
0.00000000000000E+0	1.00000000000000E+0			0.00000000000000E+0
PlPatchType	311	5	0	0.00000000000000E+0
0.00000000000000E+0	1.00000000000000E+0			0.00000000000000E+0
PlPatchType	312	5	0	0.00000000000000E+0
0.00000000000000E+0	1.00000000000000E+0			0.00000000000000E+0
PlPatchType	313	5	0	0.00000000000000E+0
0.00000000000000E+0	1.00000000000000E+0			0.00000000000000E+0
PlPatchType	314	5	0	0.00000000000000E+0
0.00000000000000E+0	1.00000000000000E+0			0.00000000000000E+0
PlPatchType	315	5	0	0.00000000000000E+0
0.00000000000000E+0	1.00000000000000E+0			0.00000000000000E+0
PlPatchType	316	5	0	0.00000000000000E+0
0.00000000000000E+0	1.00000000000000E+0			0.00000000000000E+0
PlPatchType	317	5	0	0.00000000000000E+0
0.00000000000000E+0	1.00000000000000E+0			0.00000000000000E+0
PlPatchType	318	5	0	0.00000000000000E+0
0.00000000000000E+0	1.00000000000000E+0			0.00000000000000E+0
PlPatchType	319	5	0	0.00000000000000E+0
0.00000000000000E+0	1.00000000000000E+0			0.00000000000000E+0
PlPatchType	320	5	0	0.00000000000000E+0
0.00000000000000E+0	1.00000000000000E+0			0.00000000000000E+0
PlPatchType	321	5	0	0.00000000000000E+0
0.00000000000000E+0	1.00000000000000E+0			0.00000000000000E+0
PlPatchType	322	5	0	0.00000000000000E+0
0.00000000000000E+0	1.00000000000000E+0			0.00000000000000E+0
PlPatchType	323	5	0	0.00000000000000E+0
0.00000000000000E+0	1.00000000000000E+0			0.00000000000000E+0
PlPatchType	324	5	0	0.00000000000000E+0
0.00000000000000E+0	1.00000000000000E+0			0.00000000000000E+0
PlPatchType	325	5	0	0.00000000000000E+0
0.00000000000000E+0	1.00000000000000E+0			0.00000000000000E+0
PlPatchType	326	5	0	0.00000000000000E+0
0.00000000000000E+0	1.00000000000000E+0			0.00000000000000E+0
PlPatchType	327	5	0	0.00000000000000E+0
0.00000000000000E+0	1.00000000000000E+0			0.00000000000000E+0
PlPatchType	328	5	0	0.00000000000000E+0
0.00000000000000E+0	1.00000000000000E+0			0.00000000000000E+0
PlPatchType	329	5	0	0.00000000000000E+0
0.00000000000000E+0	1.00000000000000E+0			0.00000000000000E+0
PlPatchType	330	5	0	0.00000000000000E+0
0.00000000000000E+0	1.00000000000000E+0			0.00000000000000E+0
PlPatchType	331	5	0	0.00000000000000E+0
0.00000000000000E+0	1.00000000000000E+0			0.00000000000000E+0
PlPatchType	332	5	0	0.00000000000000E+0
0.00000000000000E+0	1.00000000000000E+0			0.00000000000000E+0
PlPatchType	333	5	0	0.00000000000000E+0
0.00000000000000E+0	1.00000000000000E+0			0.00000000000000E+0
PlPatchType	334	5	0	0.00000000000000E+0

```
0.00000000000000E+0      1.00000000000000E+0      0.00000000000000E+0
   PlPatchType            335       5       0     0.00000000000000E+0
0.00000000000000E+0      1.00000000000000E+0      0.00000000000000E+0
   PlPatchType            336       5       0     0.00000000000000E+0
0.00000000000000E+0      1.00000000000000E+0      0.00000000000000E+0

/ ____________________________________________________________________________
/ RIGID LINKS

   RigidLink               12       1      31       1          XYZ
   RigidLink               12       2      36       1          XYZ
   RigidLink               12       3      41       1          XYZ
   RigidLink               12       4      46       1          XYZ
   RigidLink               12       5      51       1          XYZ
   RigidLink               12       6      56       1          XYZ
   RigidLink               12       7      61       1          XYZ
   RigidLink               12       8      66       1          XYZ
   RigidLink               12       9      71       1          XYZ
   RigidLink               12      10      76       1          XYZ
   RigidLink               12     399     466       1          XYZ
   RigidLink               12     404     471       1          XYZ
   RigidLink               12     406     476       1          XYZ
   RigidLink               12     408     481       1          XYZ
   RigidLink               12     410     486       1          XYZ
   RigidLink               12     412     491       1          XYZ
   RigidLink               12     416     496       1          XYZ
   RigidLink               12     418     501       1          XYZ
   RigidLink               12     420     506       1          XYZ
   RigidLink               12     401     521       1          XYZ

/ ____________________________________________________________________________
/ NODE RESTRAINTS (ROTATION AS RADIAN)
/ -
   NdFreedom                1       1       1           DY  DZ
   NdFreedom                1      10       1       DX  DY  DZ
   NdFreedom                1     399       1           DY  DZ
   NdFreedom                1     420       1       DX  DY  DZ
   NdFreedom                1     545       1               DZ
   NdFreedom                1     566       1               DZ
   NdFreedom                1     603       1               DZ
   NdFreedom                1     657       1               DZ

/ ____________________________________________________________________________
/ PLATE NON-STRUCTURAL MASSES
/ G01 - Carico Permanente soletta
   PlNSMass                 2       1     3.75000000000000E+2
1.00000000000000E+0      0.00000000000000E+0      0.00000000000000E+0
0.00000000000000E+0
   PlNSMass                 2       2     3.75000000000000E+2
1.00000000000000E+0      0.00000000000000E+0      0.00000000000000E+0
0.00000000000000E+0
   PlNSMass                 2       3     3.75000000000000E+2
1.00000000000000E+0      0.00000000000000E+0      0.00000000000000E+0
0.00000000000000E+0
```

```
   PlNSMass                 2       4     3.75000000000000E+2
1.00000000000000E+0      0.00000000000000E+0      0.00000000000000E+0
0.00000000000000E+0
   PlNSMass                 2       5     3.75000000000000E+2
1.00000000000000E+0      0.00000000000000E+0      0.00000000000000E+0
0.00000000000000E+0
   PlNSMass                 2       6     3.75000000000000E+2
1.00000000000000E+0      0.00000000000000E+0      0.00000000000000E+0
0.00000000000000E+0
   PlNSMass                 2       7     3.75000000000000E+2
1.00000000000000E+0      0.00000000000000E+0      0.00000000000000E+0
0.00000000000000E+0
   PlNSMass                 2       8     3.75000000000000E+2
1.00000000000000E+0      0.00000000000000E+0      0.00000000000000E+0
0.00000000000000E+0
   PlNSMass                 2       9     3.75000000000000E+2
1.00000000000000E+0      0.00000000000000E+0      0.00000000000000E+0
0.00000000000000E+0
   PlNSMass                 2      10     3.75000000000000E+2
1.00000000000000E+0      0.00000000000000E+0      0.00000000000000E+0
0.00000000000000E+0
   PlNSMass                 2      11     3.75000000000000E+2
1.00000000000000E+0      0.00000000000000E+0      0.00000000000000E+0
0.00000000000000E+0
   PlNSMass                 2      12     3.75000000000000E+2
1.00000000000000E+0      0.00000000000000E+0      0.00000000000000E+0
0.00000000000000E+0
   PlNSMass                 2      13     3.75000000000000E+2
1.00000000000000E+0      0.00000000000000E+0      0.00000000000000E+0
0.00000000000000E+0
   PlNSMass                 2      14     3.75000000000000E+2
1.00000000000000E+0      0.00000000000000E+0      0.00000000000000E+0
0.00000000000000E+0
   PlNSMass                 2      15     3.75000000000000E+2
1.00000000000000E+0      0.00000000000000E+0      0.00000000000000E+0
0.00000000000000E+0
   PlNSMass                 2      16     3.75000000000000E+2
1.00000000000000E+0      0.00000000000000E+0      0.00000000000000E+0
0.00000000000000E+0
   PlNSMass                 2      17     3.75000000000000E+2
1.00000000000000E+0      0.00000000000000E+0      0.00000000000000E+0
0.00000000000000E+0
   PlNSMass                 2      18     3.75000000000000E+2
1.00000000000000E+0      0.00000000000000E+0      0.00000000000000E+0
0.00000000000000E+0
   PlNSMass                 2      19     3.75000000000000E+2
1.00000000000000E+0      0.00000000000000E+0      0.00000000000000E+0
0.00000000000000E+0
   PlNSMass                 2      20     3.75000000000000E+2
1.00000000000000E+0      0.00000000000000E+0      0.00000000000000E+0
0.00000000000000E+0
   PlNSMass                 2      21     3.75000000000000E+2
1.00000000000000E+0      0.00000000000000E+0      0.00000000000000E+0
0.00000000000000E+0
```

```
   PlNSMass                 2      22     3.75000000000000E+2
1.00000000000000E+0      0.00000000000000E+0      0.00000000000000E+0
0.00000000000000E+0
   PlNSMass                 2      23     3.75000000000000E+2
1.00000000000000E+0      0.00000000000000E+0      0.00000000000000E+0
0.00000000000000E+0
   PlNSMass                 2      24     3.75000000000000E+2
1.00000000000000E+0      0.00000000000000E+0      0.00000000000000E+0
0.00000000000000E+0
   PlNSMass                 2      25     3.75000000000000E+2
1.00000000000000E+0      0.00000000000000E+0      0.00000000000000E+0
0.00000000000000E+0
   PlNSMass                 2      26     3.75000000000000E+2
1.00000000000000E+0      0.00000000000000E+0      0.00000000000000E+0
0.00000000000000E+0
   PlNSMass                 2      27     3.75000000000000E+2
1.00000000000000E+0      0.00000000000000E+0      0.00000000000000E+0
0.00000000000000E+0
   PlNSMass                 2      28     3.75000000000000E+2
1.00000000000000E+0      0.00000000000000E+0      0.00000000000000E+0
0.00000000000000E+0
   PlNSMass                 2      29     3.75000000000000E+2
1.00000000000000E+0      0.00000000000000E+0      0.00000000000000E+0
0.00000000000000E+0
   PlNSMass                 2      30     3.75000000000000E+2
1.00000000000000E+0      0.00000000000000E+0      0.00000000000000E+0
0.00000000000000E+0
   PlNSMass                 2      31     3.75000000000000E+2
1.00000000000000E+0      0.00000000000000E+0      0.00000000000000E+0
0.00000000000000E+0
   PlNSMass                 2      32     3.75000000000000E+2
1.00000000000000E+0      0.00000000000000E+0      0.00000000000000E+0
0.00000000000000E+0
   PlNSMass                 2      33     3.75000000000000E+2
1.00000000000000E+0      0.00000000000000E+0      0.00000000000000E+0
0.00000000000000E+0
   PlNSMass                 2      34     3.75000000000000E+2
1.00000000000000E+0      0.00000000000000E+0      0.00000000000000E+0
0.00000000000000E+0
   PlNSMass                 2      35     3.75000000000000E+2
1.00000000000000E+0      0.00000000000000E+0      0.00000000000000E+0
0.00000000000000E+0
   PlNSMass                 2      36     3.75000000000000E+2
1.00000000000000E+0      0.00000000000000E+0      0.00000000000000E+0
0.00000000000000E+0
   PlNSMass                 2      37     3.75000000000000E+2
1.00000000000000E+0      0.00000000000000E+0      0.00000000000000E+0
0.00000000000000E+0
   PlNSMass                 2      38     3.75000000000000E+2
1.00000000000000E+0      0.00000000000000E+0      0.00000000000000E+0
0.00000000000000E+0
   PlNSMass                 2      39     3.75000000000000E+2
1.00000000000000E+0      0.00000000000000E+0      0.00000000000000E+0
0.00000000000000E+0
```

```
   PlNSMass                 2      40     3.75000000000000E+2
1.00000000000000E+0      0.00000000000000E+0      0.00000000000000E+0
0.00000000000000E+0
   PlNSMass                 2      41     3.75000000000000E+2
1.00000000000000E+0      0.00000000000000E+0      0.00000000000000E+0
0.00000000000000E+0
   PlNSMass                 2      42     3.75000000000000E+2
1.00000000000000E+0      0.00000000000000E+0      0.00000000000000E+0
0.00000000000000E+0
   PlNSMass                 2      43     3.75000000000000E+2
1.00000000000000E+0      0.00000000000000E+0      0.00000000000000E+0
0.00000000000000E+0
   PlNSMass                 2      44     3.75000000000000E+2
1.00000000000000E+0      0.00000000000000E+0      0.00000000000000E+0
0.00000000000000E+0
   PlNSMass                 2      45     3.75000000000000E+2
1.00000000000000E+0      0.00000000000000E+0      0.00000000000000E+0
0.00000000000000E+0
   PlNSMass                 2      46     3.75000000000000E+2
1.00000000000000E+0      0.00000000000000E+0      0.00000000000000E+0
0.00000000000000E+0
   PlNSMass                 2      47     3.75000000000000E+2
1.00000000000000E+0      0.00000000000000E+0      0.00000000000000E+0
0.00000000000000E+0
   PlNSMass                 2      48     3.75000000000000E+2
1.00000000000000E+0      0.00000000000000E+0      0.00000000000000E+0
0.00000000000000E+0
   PlNSMass                 2      49     3.75000000000000E+2
1.00000000000000E+0      0.00000000000000E+0      0.00000000000000E+0
0.00000000000000E+0
   PlNSMass                 2      50     3.75000000000000E+2
1.00000000000000E+0      0.00000000000000E+0      0.00000000000000E+0
0.00000000000000E+0
   PlNSMass                 2      51     3.75000000000000E+2
1.00000000000000E+0      0.00000000000000E+0      0.00000000000000E+0
0.00000000000000E+0
   PlNSMass                 2      52     3.75000000000000E+2
1.00000000000000E+0      0.00000000000000E+0      0.00000000000000E+0
0.00000000000000E+0
   PlNSMass                 2      53     3.75000000000000E+2
1.00000000000000E+0      0.00000000000000E+0      0.00000000000000E+0
0.00000000000000E+0
   PlNSMass                 2      54     3.75000000000000E+2
1.00000000000000E+0      0.00000000000000E+0      0.00000000000000E+0
0.00000000000000E+0
   PlNSMass                 2      55     3.75000000000000E+2
1.00000000000000E+0      0.00000000000000E+0      0.00000000000000E+0
0.00000000000000E+0
   PlNSMass                 2      56     3.75000000000000E+2
1.00000000000000E+0      0.00000000000000E+0      0.00000000000000E+0
0.00000000000000E+0
   PlNSMass                 2      57     3.75000000000000E+2
1.00000000000000E+0      0.00000000000000E+0      0.00000000000000E+0
0.00000000000000E+0
```

```
   PlNSMass                 2      58     3.75000000000000E+2
1.00000000000000E+0      0.00000000000000E+0      0.00000000000000E+0
0.00000000000000E+0
   PlNSMass                 2      59     3.75000000000000E+2
1.00000000000000E+0      0.00000000000000E+0      0.00000000000000E+0
0.00000000000000E+0
   PlNSMass                 2      60     3.75000000000000E+2
1.00000000000000E+0      0.00000000000000E+0      0.00000000000000E+0
0.00000000000000E+0
   PlNSMass                 2      61     3.75000000000000E+2
1.00000000000000E+0      0.00000000000000E+0      0.00000000000000E+0
0.00000000000000E+0
   PlNSMass                 2      62     3.75000000000000E+2
1.00000000000000E+0      0.00000000000000E+0      0.00000000000000E+0
0.00000000000000E+0
   PlNSMass                 2      63     3.75000000000000E+2
1.00000000000000E+0      0.00000000000000E+0      0.00000000000000E+0
0.00000000000000E+0
   PlNSMass                 2      64     3.75000000000000E+2
1.00000000000000E+0      0.00000000000000E+0      0.00000000000000E+0
0.00000000000000E+0
   PlNSMass                 2      65     3.75000000000000E+2
1.00000000000000E+0      0.00000000000000E+0      0.00000000000000E+0
0.00000000000000E+0
   PlNSMass                 2      66     3.75000000000000E+2
1.00000000000000E+0      0.00000000000000E+0      0.00000000000000E+0
0.00000000000000E+0
   PlNSMass                 2      67     3.75000000000000E+2
1.00000000000000E+0      0.00000000000000E+0      0.00000000000000E+0
0.00000000000000E+0
   PlNSMass                 2      68     3.75000000000000E+2
1.00000000000000E+0      0.00000000000000E+0      0.00000000000000E+0
0.00000000000000E+0
   PlNSMass                 2      69     3.75000000000000E+2
1.00000000000000E+0      0.00000000000000E+0      0.00000000000000E+0
0.00000000000000E+0
   PlNSMass                 2      70     3.75000000000000E+2
1.00000000000000E+0      0.00000000000000E+0      0.00000000000000E+0
0.00000000000000E+0
   PlNSMass                 2      71     3.75000000000000E+2
1.00000000000000E+0      0.00000000000000E+0      0.00000000000000E+0
0.00000000000000E+0
   PlNSMass                 2      72     3.75000000000000E+2
1.00000000000000E+0      0.00000000000000E+0      0.00000000000000E+0
0.00000000000000E+0
   PlNSMass                 2      73     3.75000000000000E+2
1.00000000000000E+0      0.00000000000000E+0      0.00000000000000E+0
0.00000000000000E+0
   PlNSMass                 2      74     3.75000000000000E+2
1.00000000000000E+0      0.00000000000000E+0      0.00000000000000E+0
0.00000000000000E+0
   PlNSMass                 2      75     3.75000000000000E+2
1.00000000000000E+0      0.00000000000000E+0      0.00000000000000E+0
0.00000000000000E+0
```

```
   PlNSMass                 2      76     3.75000000000000E+2
1.00000000000000E+0      0.00000000000000E+0      0.00000000000000E+0
0.00000000000000E+0
   PlNSMass                 2      77     3.75000000000000E+2
1.00000000000000E+0      0.00000000000000E+0      0.00000000000000E+0
0.00000000000000E+0
   PlNSMass                 2      78     3.75000000000000E+2
1.00000000000000E+0      0.00000000000000E+0      0.00000000000000E+0
0.00000000000000E+0
   PlNSMass                 2      79     3.75000000000000E+2
1.00000000000000E+0      0.00000000000000E+0      0.00000000000000E+0
0.00000000000000E+0
   PlNSMass                 2      80     3.75000000000000E+2
1.00000000000000E+0      0.00000000000000E+0      0.00000000000000E+0
0.00000000000000E+0
   PlNSMass                 2      81     3.75000000000000E+2
1.00000000000000E+0      0.00000000000000E+0      0.00000000000000E+0
0.00000000000000E+0
   PlNSMass                 2      82     3.75000000000000E+2
1.00000000000000E+0      0.00000000000000E+0      0.00000000000000E+0
0.00000000000000E+0
   PlNSMass                 2      83     3.75000000000000E+2
1.00000000000000E+0      0.00000000000000E+0      0.00000000000000E+0
0.00000000000000E+0
   PlNSMass                 2      84     3.75000000000000E+2
1.00000000000000E+0      0.00000000000000E+0      0.00000000000000E+0
0.00000000000000E+0
   PlNSMass                 2      85     3.75000000000000E+2
1.00000000000000E+0      0.00000000000000E+0      0.00000000000000E+0
0.00000000000000E+0
   PlNSMass                 2      86     3.75000000000000E+2
1.00000000000000E+0      0.00000000000000E+0      0.00000000000000E+0
0.00000000000000E+0
   PlNSMass                 2      87     3.75000000000000E+2
1.00000000000000E+0      0.00000000000000E+0      0.00000000000000E+0
0.00000000000000E+0
   PlNSMass                 2      88     3.75000000000000E+2
1.00000000000000E+0      0.00000000000000E+0      0.00000000000000E+0
0.00000000000000E+0
   PlNSMass                 2      89     3.75000000000000E+2
1.00000000000000E+0      0.00000000000000E+0      0.00000000000000E+0
0.00000000000000E+0
   PlNSMass                 2      90     3.75000000000000E+2
1.00000000000000E+0      0.00000000000000E+0      0.00000000000000E+0
0.00000000000000E+0
   PlNSMass                 2      91     3.75000000000000E+2
1.00000000000000E+0      0.00000000000000E+0      0.00000000000000E+0
0.00000000000000E+0
   PlNSMass                 2      92     3.75000000000000E+2
1.00000000000000E+0      0.00000000000000E+0      0.00000000000000E+0
0.00000000000000E+0
   PlNSMass                 2      93     3.75000000000000E+2
1.00000000000000E+0      0.00000000000000E+0      0.00000000000000E+0
0.00000000000000E+0
```

```
   PlNSMass                 2      94     3.75000000000000E+2
1.00000000000000E+0      0.00000000000000E+0      0.00000000000000E+0
0.00000000000000E+0
   PlNSMass                 2      95     3.75000000000000E+2
1.00000000000000E+0      0.00000000000000E+0      0.00000000000000E+0
0.00000000000000E+0
   PlNSMass                 2      96     3.75000000000000E+2
1.00000000000000E+0      0.00000000000000E+0      0.00000000000000E+0
0.00000000000000E+0
   PlNSMass                 2      97     3.75000000000000E+2
1.00000000000000E+0      0.00000000000000E+0      0.00000000000000E+0
0.00000000000000E+0
   PlNSMass                 2      98     3.75000000000000E+2
1.00000000000000E+0      0.00000000000000E+0      0.00000000000000E+0
0.00000000000000E+0
   PlNSMass                 2      99     3.75000000000000E+2
1.00000000000000E+0      0.00000000000000E+0      0.00000000000000E+0
0.00000000000000E+0
   PlNSMass                 2     100     3.75000000000000E+2
1.00000000000000E+0      0.00000000000000E+0      0.00000000000000E+0
0.00000000000000E+0
   PlNSMass                 2     101     3.75000000000000E+2
1.00000000000000E+0      0.00000000000000E+0      0.00000000000000E+0
0.00000000000000E+0
   PlNSMass                 2     102     3.75000000000000E+2
1.00000000000000E+0      0.00000000000000E+0      0.00000000000000E+0
0.00000000000000E+0
   PlNSMass                 2     103     3.75000000000000E+2
1.00000000000000E+0      0.00000000000000E+0      0.00000000000000E+0
0.00000000000000E+0
   PlNSMass                 2     104     3.75000000000000E+2
1.00000000000000E+0      0.00000000000000E+0      0.00000000000000E+0
0.00000000000000E+0
   PlNSMass                 2     105     3.75000000000000E+2
1.00000000000000E+0      0.00000000000000E+0      0.00000000000000E+0
0.00000000000000E+0
   PlNSMass                 2     106     3.75000000000000E+2
1.00000000000000E+0      0.00000000000000E+0      0.00000000000000E+0
0.00000000000000E+0
   PlNSMass                 2     107     3.75000000000000E+2
1.00000000000000E+0      0.00000000000000E+0      0.00000000000000E+0
0.00000000000000E+0
   PlNSMass                 2     108     3.75000000000000E+2
1.00000000000000E+0      0.00000000000000E+0      0.00000000000000E+0
0.00000000000000E+0
   PlNSMass                 2     109     3.75000000000000E+2
1.00000000000000E+0      0.00000000000000E+0      0.00000000000000E+0
0.00000000000000E+0
   PlNSMass                 2     110     3.75000000000000E+2
1.00000000000000E+0      0.00000000000000E+0      0.00000000000000E+0
0.00000000000000E+0
   PlNSMass                 2     111     3.75000000000000E+2
1.00000000000000E+0      0.00000000000000E+0      0.00000000000000E+0
0.00000000000000E+0
```

```
   PlNSMass                 2     112     3.75000000000000E+2
1.00000000000000E+0      0.00000000000000E+0      0.00000000000000E+0
0.00000000000000E+0
   PlNSMass                 2     113     3.75000000000000E+2
1.00000000000000E+0      0.00000000000000E+0      0.00000000000000E+0
0.00000000000000E+0
   PlNSMass                 2     114     3.75000000000000E+2
1.00000000000000E+0      0.00000000000000E+0      0.00000000000000E+0
0.00000000000000E+0
   PlNSMass                 2     115     3.75000000000000E+2
1.00000000000000E+0      0.00000000000000E+0      0.00000000000000E+0
0.00000000000000E+0
   PlNSMass                 2     116     3.75000000000000E+2
1.00000000000000E+0      0.00000000000000E+0      0.00000000000000E+0
0.00000000000000E+0
   PlNSMass                 2     117     3.75000000000000E+2
1.00000000000000E+0      0.00000000000000E+0      0.00000000000000E+0
0.00000000000000E+0
   PlNSMass                 2     118     3.75000000000000E+2
1.00000000000000E+0      0.00000000000000E+0      0.00000000000000E+0
0.00000000000000E+0
   PlNSMass                 2     119     3.75000000000000E+2
1.00000000000000E+0      0.00000000000000E+0      0.00000000000000E+0
0.00000000000000E+0
   PlNSMass                 2     120     3.75000000000000E+2
1.00000000000000E+0      0.00000000000000E+0      0.00000000000000E+0
0.00000000000000E+0
   PlNSMass                 2     121     3.75000000000000E+2
1.00000000000000E+0      0.00000000000000E+0      0.00000000000000E+0
0.00000000000000E+0
   PlNSMass                 2     122     3.75000000000000E+2
1.00000000000000E+0      0.00000000000000E+0      0.00000000000000E+0
0.00000000000000E+0
   PlNSMass                 2     123     3.75000000000000E+2
1.00000000000000E+0      0.00000000000000E+0      0.00000000000000E+0
0.00000000000000E+0
   PlNSMass                 2     124     3.75000000000000E+2
1.00000000000000E+0      0.00000000000000E+0      0.00000000000000E+0
0.00000000000000E+0
   PlNSMass                 2     125     3.75000000000000E+2
1.00000000000000E+0      0.00000000000000E+0      0.00000000000000E+0
0.00000000000000E+0
   PlNSMass                 2     126     3.75000000000000E+2
1.00000000000000E+0      0.00000000000000E+0      0.00000000000000E+0
0.00000000000000E+0
   PlNSMass                 2     127     3.75000000000000E+2
1.00000000000000E+0      0.00000000000000E+0      0.00000000000000E+0
0.00000000000000E+0
   PlNSMass                 2     128     3.75000000000000E+2
1.00000000000000E+0      0.00000000000000E+0      0.00000000000000E+0
0.00000000000000E+0
   PlNSMass                 2     129     3.75000000000000E+2
1.00000000000000E+0      0.00000000000000E+0      0.00000000000000E+0
0.00000000000000E+0
```

```
   PlNSMass                 2     130     3.75000000000000E+2
1.00000000000000E+0      0.00000000000000E+0      0.00000000000000E+0
0.00000000000000E+0
   PlNSMass                 2     131     3.75000000000000E+2
1.00000000000000E+0      0.00000000000000E+0      0.00000000000000E+0
0.00000000000000E+0
   PlNSMass                 2     132     3.75000000000000E+2
1.00000000000000E+0      0.00000000000000E+0      0.00000000000000E+0
0.00000000000000E+0
   PlNSMass                 2     133     3.75000000000000E+2
1.00000000000000E+0      0.00000000000000E+0      0.00000000000000E+0
0.00000000000000E+0
   PlNSMass                 2     134     3.75000000000000E+2
1.00000000000000E+0      0.00000000000000E+0      0.00000000000000E+0
0.00000000000000E+0
   PlNSMass                 2     135     3.75000000000000E+2
1.00000000000000E+0      0.00000000000000E+0      0.00000000000000E+0
0.00000000000000E+0
   PlNSMass                 2     136     3.75000000000000E+2
1.00000000000000E+0      0.00000000000000E+0      0.00000000000000E+0
0.00000000000000E+0
   PlNSMass                 2     137     3.75000000000000E+2
1.00000000000000E+0      0.00000000000000E+0      0.00000000000000E+0
0.00000000000000E+0
   PlNSMass                 2     138     3.75000000000000E+2
1.00000000000000E+0      0.00000000000000E+0      0.00000000000000E+0
0.00000000000000E+0
   PlNSMass                 2     139     3.75000000000000E+2
1.00000000000000E+0      0.00000000000000E+0      0.00000000000000E+0
0.00000000000000E+0
   PlNSMass                 2     140     3.75000000000000E+2
1.00000000000000E+0      0.00000000000000E+0      0.00000000000000E+0
0.00000000000000E+0
   PlNSMass                 2     141     3.75000000000000E+2
1.00000000000000E+0      0.00000000000000E+0      0.00000000000000E+0
0.00000000000000E+0
   PlNSMass                 2     142     3.75000000000000E+2
1.00000000000000E+0      0.00000000000000E+0      0.00000000000000E+0
0.00000000000000E+0
   PlNSMass                 2     143     3.75000000000000E+2
1.00000000000000E+0      0.00000000000000E+0      0.00000000000000E+0
0.00000000000000E+0
   PlNSMass                 2     144     3.75000000000000E+2
1.00000000000000E+0      0.00000000000000E+0      0.00000000000000E+0
0.00000000000000E+0
   PlNSMass                 2     145     3.75000000000000E+2
1.00000000000000E+0      0.00000000000000E+0      0.00000000000000E+0
0.00000000000000E+0
   PlNSMass                 2     146     3.75000000000000E+2
1.00000000000000E+0      0.00000000000000E+0      0.00000000000000E+0
0.00000000000000E+0
   PlNSMass                 2     147     3.75000000000000E+2
1.00000000000000E+0      0.00000000000000E+0      0.00000000000000E+0
0.00000000000000E+0
```

```
   PlNSMass                 2     148     3.75000000000000E+2
1.00000000000000E+0      0.00000000000000E+0      0.00000000000000E+0
0.00000000000000E+0
   PlNSMass                 2     149     3.75000000000000E+2
1.00000000000000E+0      0.00000000000000E+0      0.00000000000000E+0
0.00000000000000E+0
   PlNSMass                 2     150     3.75000000000000E+2
1.00000000000000E+0      0.00000000000000E+0      0.00000000000000E+0
0.00000000000000E+0
   PlNSMass                 2     151     3.75000000000000E+2
1.00000000000000E+0      0.00000000000000E+0      0.00000000000000E+0
0.00000000000000E+0
   PlNSMass                 2     152     3.75000000000000E+2
1.00000000000000E+0      0.00000000000000E+0      0.00000000000000E+0
0.00000000000000E+0
   PlNSMass                 2     153     3.75000000000000E+2
1.00000000000000E+0      0.00000000000000E+0      0.00000000000000E+0
0.00000000000000E+0
   PlNSMass                 2     154     3.75000000000000E+2
1.00000000000000E+0      0.00000000000000E+0      0.00000000000000E+0
0.00000000000000E+0
   PlNSMass                 2     155     3.75000000000000E+2
1.00000000000000E+0      0.00000000000000E+0      0.00000000000000E+0
0.00000000000000E+0
   PlNSMass                 2     156     3.75000000000000E+2
1.00000000000000E+0      0.00000000000000E+0      0.00000000000000E+0
0.00000000000000E+0
   PlNSMass                 2     157     3.75000000000000E+2
1.00000000000000E+0      0.00000000000000E+0      0.00000000000000E+0
0.00000000000000E+0
   PlNSMass                 2     158     3.75000000000000E+2
1.00000000000000E+0      0.00000000000000E+0      0.00000000000000E+0
0.00000000000000E+0
   PlNSMass                 2     159     3.75000000000000E+2
1.00000000000000E+0      0.00000000000000E+0      0.00000000000000E+0
0.00000000000000E+0
   PlNSMass                 2     160     3.75000000000000E+2
1.00000000000000E+0      0.00000000000000E+0      0.00000000000000E+0
0.00000000000000E+0
   PlNSMass                 2     161     3.75000000000000E+2
1.00000000000000E+0      0.00000000000000E+0      0.00000000000000E+0
0.00000000000000E+0
   PlNSMass                 2     162     3.75000000000000E+2
1.00000000000000E+0      0.00000000000000E+0      0.00000000000000E+0
0.00000000000000E+0
   PlNSMass                 2     163     3.75000000000000E+2
1.00000000000000E+0      0.00000000000000E+0      0.00000000000000E+0
0.00000000000000E+0
   PlNSMass                 2     164     3.75000000000000E+2
1.00000000000000E+0      0.00000000000000E+0      0.00000000000000E+0
0.00000000000000E+0
   PlNSMass                 2     165     3.75000000000000E+2
1.00000000000000E+0      0.00000000000000E+0      0.00000000000000E+0
0.00000000000000E+0
```

```
   PlNSMass                 2     166     3.75000000000000E+2
1.00000000000000E+0      0.00000000000000E+0      0.00000000000000E+0
0.00000000000000E+0
   PlNSMass                 2     167     3.75000000000000E+2
1.00000000000000E+0      0.00000000000000E+0      0.00000000000000E+0
0.00000000000000E+0
   PlNSMass                 2     168     3.75000000000000E+2
1.00000000000000E+0      0.00000000000000E+0      0.00000000000000E+0
0.00000000000000E+0
   PlNSMass                 2     169     3.75000000000000E+2
1.00000000000000E+0      0.00000000000000E+0      0.00000000000000E+0
0.00000000000000E+0
   PlNSMass                 2     170     3.75000000000000E+2
1.00000000000000E+0      0.00000000000000E+0      0.00000000000000E+0
0.00000000000000E+0
   PlNSMass                 2     171     3.75000000000000E+2
1.00000000000000E+0      0.00000000000000E+0      0.00000000000000E+0
0.00000000000000E+0
   PlNSMass                 2     172     3.75000000000000E+2
1.00000000000000E+0      0.00000000000000E+0      0.00000000000000E+0
0.00000000000000E+0
   PlNSMass                 2     173     3.75000000000000E+2
1.00000000000000E+0      0.00000000000000E+0      0.00000000000000E+0
0.00000000000000E+0
   PlNSMass                 2     174     3.75000000000000E+2
1.00000000000000E+0      0.00000000000000E+0      0.00000000000000E+0
0.00000000000000E+0
   PlNSMass                 2     175     3.75000000000000E+2
1.00000000000000E+0      0.00000000000000E+0      0.00000000000000E+0
0.00000000000000E+0
   PlNSMass                 2     176     3.75000000000000E+2
1.00000000000000E+0      0.00000000000000E+0      0.00000000000000E+0
0.00000000000000E+0
   PlNSMass                 2     177     3.75000000000000E+2
1.00000000000000E+0      0.00000000000000E+0      0.00000000000000E+0
0.00000000000000E+0
   PlNSMass                 2     178     3.75000000000000E+2
1.00000000000000E+0      0.00000000000000E+0      0.00000000000000E+0
0.00000000000000E+0
   PlNSMass                 2     179     3.75000000000000E+2
1.00000000000000E+0      0.00000000000000E+0      0.00000000000000E+0
0.00000000000000E+0
   PlNSMass                 2     180     3.75000000000000E+2
1.00000000000000E+0      0.00000000000000E+0      0.00000000000000E+0
0.00000000000000E+0
   PlNSMass                 2     181     3.75000000000000E+2
1.00000000000000E+0      0.00000000000000E+0      0.00000000000000E+0
0.00000000000000E+0
   PlNSMass                 2     182     3.75000000000000E+2
1.00000000000000E+0      0.00000000000000E+0      0.00000000000000E+0
0.00000000000000E+0
   PlNSMass                 2     183     3.75000000000000E+2
1.00000000000000E+0      0.00000000000000E+0      0.00000000000000E+0
0.00000000000000E+0
```

```
   PlNSMass                 2     184     3.75000000000000E+2
1.00000000000000E+0      0.00000000000000E+0      0.00000000000000E+0
0.00000000000000E+0
   PlNSMass                 2     185     3.75000000000000E+2
1.00000000000000E+0      0.00000000000000E+0      0.00000000000000E+0
0.00000000000000E+0
   PlNSMass                 2     186     3.75000000000000E+2
1.00000000000000E+0      0.00000000000000E+0      0.00000000000000E+0
0.00000000000000E+0
   PlNSMass                 2     187     3.75000000000000E+2
1.00000000000000E+0      0.00000000000000E+0      0.00000000000000E+0
0.00000000000000E+0
   PlNSMass                 2     188     3.75000000000000E+2
1.00000000000000E+0      0.00000000000000E+0      0.00000000000000E+0
0.00000000000000E+0
   PlNSMass                 2     189     3.75000000000000E+2
1.00000000000000E+0      0.00000000000000E+0      0.00000000000000E+0
0.00000000000000E+0
   PlNSMass                 2     190     3.75000000000000E+2
1.00000000000000E+0      0.00000000000000E+0      0.00000000000000E+0
0.00000000000000E+0
   PlNSMass                 2     191     3.75000000000000E+2
1.00000000000000E+0      0.00000000000000E+0      0.00000000000000E+0
0.00000000000000E+0
   PlNSMass                 2     192     3.75000000000000E+2
1.00000000000000E+0      0.00000000000000E+0      0.00000000000000E+0
0.00000000000000E+0
   PlNSMass                 2     193     3.75000000000000E+2
1.00000000000000E+0      0.00000000000000E+0      0.00000000000000E+0
0.00000000000000E+0
   PlNSMass                 2     194     3.75000000000000E+2
1.00000000000000E+0      0.00000000000000E+0      0.00000000000000E+0
0.00000000000000E+0
   PlNSMass                 2     195     3.75000000000000E+2
1.00000000000000E+0      0.00000000000000E+0      0.00000000000000E+0
0.00000000000000E+0
   PlNSMass                 2     196     3.75000000000000E+2
1.00000000000000E+0      0.00000000000000E+0      0.00000000000000E+0
0.00000000000000E+0
   PlNSMass                 2     197     3.75000000000000E+2
1.00000000000000E+0      0.00000000000000E+0      0.00000000000000E+0
0.00000000000000E+0
   PlNSMass                 2     198     3.75000000000000E+2
1.00000000000000E+0      0.00000000000000E+0      0.00000000000000E+0
0.00000000000000E+0
   PlNSMass                 2     199     3.75000000000000E+2
1.00000000000000E+0      0.00000000000000E+0      0.00000000000000E+0
0.00000000000000E+0
   PlNSMass                 2     200     3.75000000000000E+2
1.00000000000000E+0      0.00000000000000E+0      0.00000000000000E+0
0.00000000000000E+0
   PlNSMass                 2     201     3.75000000000000E+2
1.00000000000000E+0      0.00000000000000E+0      0.00000000000000E+0
0.00000000000000E+0
```

```
   PlNSMass                 2     202     3.75000000000000E+2
1.00000000000000E+0      0.00000000000000E+0      0.00000000000000E+0
0.00000000000000E+0
   PlNSMass                 2     203     3.75000000000000E+2
1.00000000000000E+0      0.00000000000000E+0      0.00000000000000E+0
0.00000000000000E+0
   PlNSMass                 2     204     3.75000000000000E+2
1.00000000000000E+0      0.00000000000000E+0      0.00000000000000E+0
0.00000000000000E+0
   PlNSMass                 2     205     3.75000000000000E+2
1.00000000000000E+0      0.00000000000000E+0      0.00000000000000E+0
0.00000000000000E+0
   PlNSMass                 2     206     3.75000000000000E+2
1.00000000000000E+0      0.00000000000000E+0      0.00000000000000E+0
0.00000000000000E+0
   PlNSMass                 2     207     3.75000000000000E+2
1.00000000000000E+0      0.00000000000000E+0      0.00000000000000E+0
0.00000000000000E+0
   PlNSMass                 2     208     3.75000000000000E+2
1.00000000000000E+0      0.00000000000000E+0      0.00000000000000E+0
0.00000000000000E+0
   PlNSMass                 2     209     3.75000000000000E+2
1.00000000000000E+0      0.00000000000000E+0      0.00000000000000E+0
0.00000000000000E+0
   PlNSMass                 2     210     3.75000000000000E+2
1.00000000000000E+0      0.00000000000000E+0      0.00000000000000E+0
0.00000000000000E+0
   PlNSMass                 2     211     3.75000000000000E+2
1.00000000000000E+0      0.00000000000000E+0      0.00000000000000E+0
0.00000000000000E+0
   PlNSMass                 2     212     3.75000000000000E+2
1.00000000000000E+0      0.00000000000000E+0      0.00000000000000E+0
0.00000000000000E+0
   PlNSMass                 2     213     3.75000000000000E+2
1.00000000000000E+0      0.00000000000000E+0      0.00000000000000E+0
0.00000000000000E+0
   PlNSMass                 2     214     3.75000000000000E+2
1.00000000000000E+0      0.00000000000000E+0      0.00000000000000E+0
0.00000000000000E+0
   PlNSMass                 2     215     3.75000000000000E+2
1.00000000000000E+0      0.00000000000000E+0      0.00000000000000E+0
0.00000000000000E+0
   PlNSMass                 2     216     3.75000000000000E+2
1.00000000000000E+0      0.00000000000000E+0      0.00000000000000E+0
0.00000000000000E+0
   PlNSMass                 2     217     3.75000000000000E+2
1.00000000000000E+0      0.00000000000000E+0      0.00000000000000E+0
0.00000000000000E+0
   PlNSMass                 2     218     3.75000000000000E+2
1.00000000000000E+0      0.00000000000000E+0      0.00000000000000E+0
0.00000000000000E+0
   PlNSMass                 2     219     3.75000000000000E+2
1.00000000000000E+0      0.00000000000000E+0      0.00000000000000E+0
0.00000000000000E+0
```

```
   PlNSMass                 2     220     3.75000000000000E+2
1.00000000000000E+0      0.00000000000000E+0      0.00000000000000E+0
0.00000000000000E+0
   PlNSMass                 2     221     3.75000000000000E+2
1.00000000000000E+0      0.00000000000000E+0      0.00000000000000E+0
0.00000000000000E+0
   PlNSMass                 2     222     3.75000000000000E+2
1.00000000000000E+0      0.00000000000000E+0      0.00000000000000E+0
0.00000000000000E+0
   PlNSMass                 2     223     3.75000000000000E+2
1.00000000000000E+0      0.00000000000000E+0      0.00000000000000E+0
0.00000000000000E+0
   PlNSMass                 2     224     3.75000000000000E+2
1.00000000000000E+0      0.00000000000000E+0      0.00000000000000E+0
0.00000000000000E+0
   PlNSMass                 2     225     3.75000000000000E+2
1.00000000000000E+0      0.00000000000000E+0      0.00000000000000E+0
0.00000000000000E+0
   PlNSMass                 2     226     3.75000000000000E+2
1.00000000000000E+0      0.00000000000000E+0      0.00000000000000E+0
0.00000000000000E+0
   PlNSMass                 2     227     3.75000000000000E+2
1.00000000000000E+0      0.00000000000000E+0      0.00000000000000E+0
0.00000000000000E+0
   PlNSMass                 2     228     3.75000000000000E+2
1.00000000000000E+0      0.00000000000000E+0      0.00000000000000E+0
0.00000000000000E+0
   PlNSMass                 2     229     3.75000000000000E+2
1.00000000000000E+0      0.00000000000000E+0      0.00000000000000E+0
0.00000000000000E+0
   PlNSMass                 2     230     3.75000000000000E+2
1.00000000000000E+0      0.00000000000000E+0      0.00000000000000E+0
0.00000000000000E+0
   PlNSMass                 2     231     3.75000000000000E+2
1.00000000000000E+0      0.00000000000000E+0      0.00000000000000E+0
0.00000000000000E+0
   PlNSMass                 2     232     3.75000000000000E+2
1.00000000000000E+0      0.00000000000000E+0      0.00000000000000E+0
0.00000000000000E+0
   PlNSMass                 2     233     3.75000000000000E+2
1.00000000000000E+0      0.00000000000000E+0      0.00000000000000E+0
0.00000000000000E+0
   PlNSMass                 2     234     3.75000000000000E+2
1.00000000000000E+0      0.00000000000000E+0      0.00000000000000E+0
0.00000000000000E+0
   PlNSMass                 2     235     3.75000000000000E+2
1.00000000000000E+0      0.00000000000000E+0      0.00000000000000E+0
0.00000000000000E+0
   PlNSMass                 2     236     3.75000000000000E+2
1.00000000000000E+0      0.00000000000000E+0      0.00000000000000E+0
0.00000000000000E+0
   PlNSMass                 2     237     3.75000000000000E+2
1.00000000000000E+0      0.00000000000000E+0      0.00000000000000E+0
0.00000000000000E+0
```

```
   PlNSMass                 2     238     3.75000000000000E+2
1.00000000000000E+0      0.00000000000000E+0      0.00000000000000E+0
0.00000000000000E+0
   PlNSMass                 2     239     3.75000000000000E+2
1.00000000000000E+0      0.00000000000000E+0      0.00000000000000E+0
0.00000000000000E+0
   PlNSMass                 2     240     3.75000000000000E+2
1.00000000000000E+0      0.00000000000000E+0      0.00000000000000E+0
0.00000000000000E+0
   PlNSMass                 2     241     3.75000000000000E+2
1.00000000000000E+0      0.00000000000000E+0      0.00000000000000E+0
0.00000000000000E+0
   PlNSMass                 2     242     3.75000000000000E+2
1.00000000000000E+0      0.00000000000000E+0      0.00000000000000E+0
0.00000000000000E+0
   PlNSMass                 2     243     3.75000000000000E+2
1.00000000000000E+0      0.00000000000000E+0      0.00000000000000E+0
0.00000000000000E+0
   PlNSMass                 2     244     3.75000000000000E+2
1.00000000000000E+0      0.00000000000000E+0      0.00000000000000E+0
0.00000000000000E+0
   PlNSMass                 2     245     3.75000000000000E+2
1.00000000000000E+0      0.00000000000000E+0      0.00000000000000E+0
0.00000000000000E+0
   PlNSMass                 2     246     3.75000000000000E+2
1.00000000000000E+0      0.00000000000000E+0      0.00000000000000E+0
0.00000000000000E+0
   PlNSMass                 2     247     3.75000000000000E+2
1.00000000000000E+0      0.00000000000000E+0      0.00000000000000E+0
0.00000000000000E+0
   PlNSMass                 2     248     3.75000000000000E+2
1.00000000000000E+0      0.00000000000000E+0      0.00000000000000E+0
0.00000000000000E+0
   PlNSMass                 2     249     3.75000000000000E+2
1.00000000000000E+0      0.00000000000000E+0      0.00000000000000E+0
0.00000000000000E+0
   PlNSMass                 2     250     3.75000000000000E+2
1.00000000000000E+0      0.00000000000000E+0      0.00000000000000E+0
0.00000000000000E+0
   PlNSMass                 2     251     3.75000000000000E+2
1.00000000000000E+0      0.00000000000000E+0      0.00000000000000E+0
0.00000000000000E+0
   PlNSMass                 2     252     3.75000000000000E+2
1.00000000000000E+0      0.00000000000000E+0      0.00000000000000E+0
0.00000000000000E+0
   PlNSMass                 2     253     3.75000000000000E+2
1.00000000000000E+0      0.00000000000000E+0      0.00000000000000E+0
0.00000000000000E+0
   PlNSMass                 2     254     3.75000000000000E+2
1.00000000000000E+0      0.00000000000000E+0      0.00000000000000E+0
0.00000000000000E+0
   PlNSMass                 2     255     3.75000000000000E+2
1.00000000000000E+0      0.00000000000000E+0      0.00000000000000E+0
0.00000000000000E+0
```

```
   PlNSMass                 2     256     3.75000000000000E+2
1.00000000000000E+0      0.00000000000000E+0      0.00000000000000E+0
0.00000000000000E+0
   PlNSMass                 2     257     3.75000000000000E+2
1.00000000000000E+0      0.00000000000000E+0      0.00000000000000E+0
0.00000000000000E+0
   PlNSMass                 2     258     3.75000000000000E+2
1.00000000000000E+0      0.00000000000000E+0      0.00000000000000E+0
0.00000000000000E+0
   PlNSMass                 2     259     3.75000000000000E+2
1.00000000000000E+0      0.00000000000000E+0      0.00000000000000E+0
0.00000000000000E+0
   PlNSMass                 2     260     3.75000000000000E+2
1.00000000000000E+0      0.00000000000000E+0      0.00000000000000E+0
0.00000000000000E+0
   PlNSMass                 2     261     3.75000000000000E+2
1.00000000000000E+0      0.00000000000000E+0      0.00000000000000E+0
0.00000000000000E+0
   PlNSMass                 2     262     3.75000000000000E+2
1.00000000000000E+0      0.00000000000000E+0      0.00000000000000E+0
0.00000000000000E+0
   PlNSMass                 2     263     3.75000000000000E+2
1.00000000000000E+0      0.00000000000000E+0      0.00000000000000E+0
0.00000000000000E+0
   PlNSMass                 2     264     3.75000000000000E+2
1.00000000000000E+0      0.00000000000000E+0      0.00000000000000E+0
0.00000000000000E+0
   PlNSMass                 2     265     3.75000000000000E+2
1.00000000000000E+0      0.00000000000000E+0      0.00000000000000E+0
0.00000000000000E+0
   PlNSMass                 2     266     3.75000000000000E+2
1.00000000000000E+0      0.00000000000000E+0      0.00000000000000E+0
0.00000000000000E+0
   PlNSMass                 2     267     3.75000000000000E+2
1.00000000000000E+0      0.00000000000000E+0      0.00000000000000E+0
0.00000000000000E+0
   PlNSMass                 2     268     3.75000000000000E+2
1.00000000000000E+0      0.00000000000000E+0      0.00000000000000E+0
0.00000000000000E+0
   PlNSMass                 2     269     3.75000000000000E+2
1.00000000000000E+0      0.00000000000000E+0      0.00000000000000E+0
0.00000000000000E+0
   PlNSMass                 2     270     3.75000000000000E+2
1.00000000000000E+0      0.00000000000000E+0      0.00000000000000E+0
0.00000000000000E+0
   PlNSMass                 2     271     3.75000000000000E+2
1.00000000000000E+0      0.00000000000000E+0      0.00000000000000E+0
0.00000000000000E+0
   PlNSMass                 2     272     3.75000000000000E+2
1.00000000000000E+0      0.00000000000000E+0      0.00000000000000E+0
0.00000000000000E+0
   PlNSMass                 2     273     3.75000000000000E+2
1.00000000000000E+0      0.00000000000000E+0      0.00000000000000E+0
0.00000000000000E+0
```

```
   PlNSMass                 2     274     3.75000000000000E+2
1.00000000000000E+0      0.00000000000000E+0      0.00000000000000E+0
0.00000000000000E+0
   PlNSMass                 2     275     3.75000000000000E+2
1.00000000000000E+0      0.00000000000000E+0      0.00000000000000E+0
0.00000000000000E+0
   PlNSMass                 2     276     3.75000000000000E+2
1.00000000000000E+0      0.00000000000000E+0      0.00000000000000E+0
0.00000000000000E+0
   PlNSMass                 2     277     3.75000000000000E+2
1.00000000000000E+0      0.00000000000000E+0      0.00000000000000E+0
0.00000000000000E+0
   PlNSMass                 2     278     3.75000000000000E+2
1.00000000000000E+0      0.00000000000000E+0      0.00000000000000E+0
0.00000000000000E+0
   PlNSMass                 2     279     3.75000000000000E+2
1.00000000000000E+0      0.00000000000000E+0      0.00000000000000E+0
0.00000000000000E+0
   PlNSMass                 2     280     3.75000000000000E+2
1.00000000000000E+0      0.00000000000000E+0      0.00000000000000E+0
0.00000000000000E+0
   PlNSMass                 2     281     3.75000000000000E+2
1.00000000000000E+0      0.00000000000000E+0      0.00000000000000E+0
0.00000000000000E+0
   PlNSMass                 2     282     3.75000000000000E+2
1.00000000000000E+0      0.00000000000000E+0      0.00000000000000E+0
0.00000000000000E+0
   PlNSMass                 2     283     3.75000000000000E+2
1.00000000000000E+0      0.00000000000000E+0      0.00000000000000E+0
0.00000000000000E+0
   PlNSMass                 2     284     3.75000000000000E+2
1.00000000000000E+0      0.00000000000000E+0      0.00000000000000E+0
0.00000000000000E+0
   PlNSMass                 2     285     3.75000000000000E+2
1.00000000000000E+0      0.00000000000000E+0      0.00000000000000E+0
0.00000000000000E+0
   PlNSMass                 2     286     3.75000000000000E+2
1.00000000000000E+0      0.00000000000000E+0      0.00000000000000E+0
0.00000000000000E+0
   PlNSMass                 2     287     3.75000000000000E+2
1.00000000000000E+0      0.00000000000000E+0      0.00000000000000E+0
0.00000000000000E+0
   PlNSMass                 2     288     3.75000000000000E+2
1.00000000000000E+0      0.00000000000000E+0      0.00000000000000E+0
0.00000000000000E+0
   PlNSMass                 2     289     3.75000000000000E+2
1.00000000000000E+0      0.00000000000000E+0      0.00000000000000E+0
0.00000000000000E+0
   PlNSMass                 2     290     3.75000000000000E+2
1.00000000000000E+0      0.00000000000000E+0      0.00000000000000E+0
0.00000000000000E+0
   PlNSMass                 2     291     3.75000000000000E+2
1.00000000000000E+0      0.00000000000000E+0      0.00000000000000E+0
0.00000000000000E+0
```

```
   PlNSMass                 2     292     3.75000000000000E+2
1.00000000000000E+0      0.00000000000000E+0      0.00000000000000E+0
0.00000000000000E+0
   PlNSMass                 2     293     3.75000000000000E+2
1.00000000000000E+0      0.00000000000000E+0      0.00000000000000E+0
0.00000000000000E+0
   PlNSMass                 2     294     3.75000000000000E+2
1.00000000000000E+0      0.00000000000000E+0      0.00000000000000E+0
0.00000000000000E+0
   PlNSMass                 2     295     3.75000000000000E+2
1.00000000000000E+0      0.00000000000000E+0      0.00000000000000E+0
0.00000000000000E+0
   PlNSMass                 2     296     3.75000000000000E+2
1.00000000000000E+0      0.00000000000000E+0      0.00000000000000E+0
0.00000000000000E+0
   PlNSMass                 2     297     3.75000000000000E+2
1.00000000000000E+0      0.00000000000000E+0      0.00000000000000E+0
0.00000000000000E+0
   PlNSMass                 2     298     3.75000000000000E+2
1.00000000000000E+0      0.00000000000000E+0      0.00000000000000E+0
0.00000000000000E+0
   PlNSMass                 2     299     3.75000000000000E+2
1.00000000000000E+0      0.00000000000000E+0      0.00000000000000E+0
0.00000000000000E+0
   PlNSMass                 2     300     3.75000000000000E+2
1.00000000000000E+0      0.00000000000000E+0      0.00000000000000E+0
0.00000000000000E+0
   PlNSMass                 2     301     3.75000000000000E+2
1.00000000000000E+0      0.00000000000000E+0      0.00000000000000E+0
0.00000000000000E+0
   PlNSMass                 2     302     3.75000000000000E+2
1.00000000000000E+0      0.00000000000000E+0      0.00000000000000E+0
0.00000000000000E+0
   PlNSMass                 2     303     3.75000000000000E+2
1.00000000000000E+0      0.00000000000000E+0      0.00000000000000E+0
0.00000000000000E+0
   PlNSMass                 2     304     3.75000000000000E+2
1.00000000000000E+0      0.00000000000000E+0      0.00000000000000E+0
0.00000000000000E+0
   PlNSMass                 2     305     3.75000000000000E+2
1.00000000000000E+0      0.00000000000000E+0      0.00000000000000E+0
0.00000000000000E+0
   PlNSMass                 2     306     3.75000000000000E+2
1.00000000000000E+0      0.00000000000000E+0      0.00000000000000E+0
0.00000000000000E+0
   PlNSMass                 2     307     3.75000000000000E+2
1.00000000000000E+0      0.00000000000000E+0      0.00000000000000E+0
0.00000000000000E+0
   PlNSMass                 2     308     3.75000000000000E+2
1.00000000000000E+0      0.00000000000000E+0      0.00000000000000E+0
0.00000000000000E+0
   PlNSMass                 2     309     3.75000000000000E+2
1.00000000000000E+0      0.00000000000000E+0      0.00000000000000E+0
0.00000000000000E+0
```

```
   PlNSMass                 2     310     3.75000000000000E+2
1.00000000000000E+0      0.00000000000000E+0      0.00000000000000E+0
0.00000000000000E+0
   PlNSMass                 2     311     3.75000000000000E+2
1.00000000000000E+0      0.00000000000000E+0      0.00000000000000E+0
0.00000000000000E+0
   PlNSMass                 2     312     3.75000000000000E+2
1.00000000000000E+0      0.00000000000000E+0      0.00000000000000E+0
0.00000000000000E+0
   PlNSMass                 2     313     3.75000000000000E+2
1.00000000000000E+0      0.00000000000000E+0      0.00000000000000E+0
0.00000000000000E+0
   PlNSMass                 2     314     3.75000000000000E+2
1.00000000000000E+0      0.00000000000000E+0      0.00000000000000E+0
0.00000000000000E+0
   PlNSMass                 2     315     3.75000000000000E+2
1.00000000000000E+0      0.00000000000000E+0      0.00000000000000E+0
0.00000000000000E+0
   PlNSMass                 2     316     3.75000000000000E+2
1.00000000000000E+0      0.00000000000000E+0      0.00000000000000E+0
0.00000000000000E+0
   PlNSMass                 2     317     3.75000000000000E+2
1.00000000000000E+0      0.00000000000000E+0      0.00000000000000E+0
0.00000000000000E+0
   PlNSMass                 2     318     3.75000000000000E+2
1.00000000000000E+0      0.00000000000000E+0      0.00000000000000E+0
0.00000000000000E+0
   PlNSMass                 2     319     3.75000000000000E+2
1.00000000000000E+0      0.00000000000000E+0      0.00000000000000E+0
0.00000000000000E+0
   PlNSMass                 2     320     3.75000000000000E+2
1.00000000000000E+0      0.00000000000000E+0      0.00000000000000E+0
0.00000000000000E+0
   PlNSMass                 2     321     3.75000000000000E+2
1.00000000000000E+0      0.00000000000000E+0      0.00000000000000E+0
0.00000000000000E+0
   PlNSMass                 2     322     3.75000000000000E+2
1.00000000000000E+0      0.00000000000000E+0      0.00000000000000E+0
0.00000000000000E+0
   PlNSMass                 2     323     3.75000000000000E+2
1.00000000000000E+0      0.00000000000000E+0      0.00000000000000E+0
0.00000000000000E+0
   PlNSMass                 2     324     3.75000000000000E+2
1.00000000000000E+0      0.00000000000000E+0      0.00000000000000E+0
0.00000000000000E+0
   PlNSMass                 2     325     3.75000000000000E+2
1.00000000000000E+0      0.00000000000000E+0      0.00000000000000E+0
0.00000000000000E+0
   PlNSMass                 2     326     3.75000000000000E+2
1.00000000000000E+0      0.00000000000000E+0      0.00000000000000E+0
0.00000000000000E+0
   PlNSMass                 2     327     3.75000000000000E+2
1.00000000000000E+0      0.00000000000000E+0      0.00000000000000E+0
0.00000000000000E+0
```

```
   PlNSMass                 2     328     3.75000000000000E+2
1.00000000000000E+0      0.00000000000000E+0      0.00000000000000E+0
0.00000000000000E+0
   PlNSMass                 2     329     3.75000000000000E+2
1.00000000000000E+0      0.00000000000000E+0      0.00000000000000E+0
0.00000000000000E+0
   PlNSMass                 2     330     3.75000000000000E+2
1.00000000000000E+0      0.00000000000000E+0      0.00000000000000E+0
0.00000000000000E+0
   PlNSMass                 2     331     3.75000000000000E+2
1.00000000000000E+0      0.00000000000000E+0      0.00000000000000E+0
0.00000000000000E+0
   PlNSMass                 2     332     3.75000000000000E+2
1.00000000000000E+0      0.00000000000000E+0      0.00000000000000E+0
0.00000000000000E+0
   PlNSMass                 2     333     3.75000000000000E+2
1.00000000000000E+0      0.00000000000000E+0      0.00000000000000E+0
0.00000000000000E+0
   PlNSMass                 2     334     3.75000000000000E+2
1.00000000000000E+0      0.00000000000000E+0      0.00000000000000E+0
0.00000000000000E+0
   PlNSMass                 2     335     3.75000000000000E+2
1.00000000000000E+0      0.00000000000000E+0      0.00000000000000E+0
0.00000000000000E+0
   PlNSMass                 2     336     3.75000000000000E+2
1.00000000000000E+0      0.00000000000000E+0      0.00000000000000E+0
0.00000000000000E+0

/ ____________________________________________________________________
/ BEAM NON-STRUCTURAL MASSES
/ G02a - Carico Pannelli Fonoassorbenti
   BmNSMass                 3       1       1     7.00000000000000E+2
7.00000000000000E+2      0.00000000000000E+0      0.00000000000000E+0
0.00000000000000E+0      0.00000000000000E+0      1.00000000000000E+0
    0.00000000000000E+0      0.00000000000000E+0      0.00000000000000E+0
   BmNSMass                 3       2       1     7.00000000000000E+2
7.00000000000000E+2      0.00000000000000E+0      0.00000000000000E+0
0.00000000000000E+0      0.00000000000000E+0      1.00000000000000E+0
    0.00000000000000E+0      0.00000000000000E+0      0.00000000000000E+0
   BmNSMass                 3       3       1     7.00000000000000E+2
7.00000000000000E+2      0.00000000000000E+0      0.00000000000000E+0
0.00000000000000E+0      0.00000000000000E+0      1.00000000000000E+0
    0.00000000000000E+0      0.00000000000000E+0      0.00000000000000E+0
   BmNSMass                 3       4       1     7.00000000000000E+2
7.00000000000000E+2      0.00000000000000E+0      0.00000000000000E+0
0.00000000000000E+0      0.00000000000000E+0      1.00000000000000E+0
    0.00000000000000E+0      0.00000000000000E+0      0.00000000000000E+0
   BmNSMass                 3       5       1     7.00000000000000E+2
7.00000000000000E+2      0.00000000000000E+0      0.00000000000000E+0
0.00000000000000E+0      0.00000000000000E+0      1.00000000000000E+0
    0.00000000000000E+0      0.00000000000000E+0      0.00000000000000E+0
   BmNSMass                 3       6       1     7.00000000000000E+2
7.00000000000000E+2      0.00000000000000E+0      0.00000000000000E+0
0.00000000000000E+0      0.00000000000000E+0      1.00000000000000E+0
```

```
    0.00000000000000E+0      0.00000000000000E+0      0.00000000000000E+0
   BmNSMass                  3       7       1     7.00000000000000E+2
7.00000000000000E+2      0.00000000000000E+0      0.00000000000000E+0
0.00000000000000E+0      0.00000000000000E+0      1.00000000000000E+0
    0.00000000000000E+0      0.00000000000000E+0      0.00000000000000E+0
   BmNSMass                  3       8       1     7.00000000000000E+2
7.00000000000000E+2      0.00000000000000E+0      0.00000000000000E+0
0.00000000000000E+0      0.00000000000000E+0      1.00000000000000E+0
    0.00000000000000E+0      0.00000000000000E+0      0.00000000000000E+0
   BmNSMass                  3       9       1     7.00000000000000E+2
7.00000000000000E+2      0.00000000000000E+0      0.00000000000000E+0
0.00000000000000E+0      0.00000000000000E+0      1.00000000000000E+0
    0.00000000000000E+0      0.00000000000000E+0      0.00000000000000E+0
   BmNSMass                  3      10       1     7.00000000000000E+2
7.00000000000000E+2      0.00000000000000E+0      0.00000000000000E+0
0.00000000000000E+0      0.00000000000000E+0      1.00000000000000E+0
    0.00000000000000E+0      0.00000000000000E+0      0.00000000000000E+0
   BmNSMass                  3      11       1     7.00000000000000E+2
7.00000000000000E+2      0.00000000000000E+0      0.00000000000000E+0
0.00000000000000E+0      0.00000000000000E+0      1.00000000000000E+0
    0.00000000000000E+0      0.00000000000000E+0      0.00000000000000E+0
   BmNSMass                  3      12       1     7.00000000000000E+2
7.00000000000000E+2      0.00000000000000E+0      0.00000000000000E+0
0.00000000000000E+0      0.00000000000000E+0      1.00000000000000E+0
    0.00000000000000E+0      0.00000000000000E+0      0.00000000000000E+0
   BmNSMass                  3      13       1     1.50000000000000E+2
1.50000000000000E+2      0.00000000000000E+0      0.00000000000000E+0
0.00000000000000E+0      0.00000000000000E+0      1.00000000000000E+0
    0.00000000000000E+0      0.00000000000000E+0      0.00000000000000E+0
   BmNSMass                  3      14       1     3.00000000000000E+2
3.00000000000000E+2      0.00000000000000E+0      0.00000000000000E+0
0.00000000000000E+0      0.00000000000000E+0      1.00000000000000E+0
    0.00000000000000E+0      0.00000000000000E+0      0.00000000000000E+0
   BmNSMass                  3      15       1     3.00000000000000E+2
3.00000000000000E+2      0.00000000000000E+0      0.00000000000000E+0
0.00000000000000E+0      0.00000000000000E+0      1.00000000000000E+0
    0.00000000000000E+0      0.00000000000000E+0      0.00000000000000E+0
   BmNSMass                  3      16       1     3.00000000000000E+2
3.00000000000000E+2      0.00000000000000E+0      0.00000000000000E+0
0.00000000000000E+0      0.00000000000000E+0      1.00000000000000E+0
    0.00000000000000E+0      0.00000000000000E+0      0.00000000000000E+0
   BmNSMass                  3      17       1     3.00000000000000E+2
3.00000000000000E+2      0.00000000000000E+0      0.00000000000000E+0
0.00000000000000E+0      0.00000000000000E+0      1.00000000000000E+0
    0.00000000000000E+0      0.00000000000000E+0      0.00000000000000E+0
   BmNSMass                  3      18       1     3.00000000000000E+2
3.00000000000000E+2      0.00000000000000E+0      0.00000000000000E+0
0.00000000000000E+0      0.00000000000000E+0      1.00000000000000E+0
    0.00000000000000E+0      0.00000000000000E+0      0.00000000000000E+0
   BmNSMass                  3      19       1     3.00000000000000E+2
3.00000000000000E+2      0.00000000000000E+0      0.00000000000000E+0
0.00000000000000E+0      0.00000000000000E+0      1.00000000000000E+0
    0.00000000000000E+0      0.00000000000000E+0      0.00000000000000E+0
   BmNSMass                  3      20       1     3.00000000000000E+2
```

```
3.00000000000000E+2      0.00000000000000E+0      0.00000000000000E+0
0.00000000000000E+0      0.00000000000000E+0      1.00000000000000E+0
    0.00000000000000E+0      0.00000000000000E+0      0.00000000000000E+0
   BmNSMass                 3      21       1     3.00000000000000E+2
3.00000000000000E+2      0.00000000000000E+0      0.00000000000000E+0
0.00000000000000E+0      0.00000000000000E+0      1.00000000000000E+0
    0.00000000000000E+0      0.00000000000000E+0      0.00000000000000E+0
   BmNSMass                 3      22       1     1.50000000000000E+2
1.50000000000000E+2      0.00000000000000E+0      0.00000000000000E+0
0.00000000000000E+0      0.00000000000000E+0      1.00000000000000E+0
    0.00000000000000E+0      0.00000000000000E+0      0.00000000000000E+0
   BmNSMass                 3      25       1     7.00000000000000E+2
7.00000000000000E+2      0.00000000000000E+0      0.00000000000000E+0
0.00000000000000E+0      0.00000000000000E+0      1.00000000000000E+0
    0.00000000000000E+0      0.00000000000000E+0      0.00000000000000E+0
   BmNSMass                 3      26       1     7.00000000000000E+2
7.00000000000000E+2      0.00000000000000E+0      0.00000000000000E+0
0.00000000000000E+0      0.00000000000000E+0      1.00000000000000E+0
    0.00000000000000E+0      0.00000000000000E+0      0.00000000000000E+0
   BmNSMass                 3      27       1     7.00000000000000E+2
7.00000000000000E+2      0.00000000000000E+0      0.00000000000000E+0
0.00000000000000E+0      0.00000000000000E+0      1.00000000000000E+0
    0.00000000000000E+0      0.00000000000000E+0      0.00000000000000E+0
   BmNSMass                 3      28       1     7.00000000000000E+2
7.00000000000000E+2      0.00000000000000E+0      0.00000000000000E+0
0.00000000000000E+0      0.00000000000000E+0      1.00000000000000E+0
    0.00000000000000E+0      0.00000000000000E+0      0.00000000000000E+0
   BmNSMass                 3      29       1     7.00000000000000E+2
7.00000000000000E+2      0.00000000000000E+0      0.00000000000000E+0
0.00000000000000E+0      0.00000000000000E+0      1.00000000000000E+0
    0.00000000000000E+0      0.00000000000000E+0      0.00000000000000E+0
   BmNSMass                 3      30       1     7.00000000000000E+2
7.00000000000000E+2      0.00000000000000E+0      0.00000000000000E+0
0.00000000000000E+0      0.00000000000000E+0      1.00000000000000E+0
    0.00000000000000E+0      0.00000000000000E+0      0.00000000000000E+0
   BmNSMass                 3      31       1     7.00000000000000E+2
7.00000000000000E+2      0.00000000000000E+0      0.00000000000000E+0
0.00000000000000E+0      0.00000000000000E+0      1.00000000000000E+0
    0.00000000000000E+0      0.00000000000000E+0      0.00000000000000E+0
   BmNSMass                 3      32       1     7.00000000000000E+2
7.00000000000000E+2      0.00000000000000E+0      0.00000000000000E+0
0.00000000000000E+0      0.00000000000000E+0      1.00000000000000E+0
    0.00000000000000E+0      0.00000000000000E+0      0.00000000000000E+0
   BmNSMass                 3      33       1     7.00000000000000E+2
7.00000000000000E+2      0.00000000000000E+0      0.00000000000000E+0
0.00000000000000E+0      0.00000000000000E+0      1.00000000000000E+0
    0.00000000000000E+0      0.00000000000000E+0      0.00000000000000E+0
   BmNSMass                 3      34       1     7.00000000000000E+2
7.00000000000000E+2      0.00000000000000E+0      0.00000000000000E+0
0.00000000000000E+0      0.00000000000000E+0      1.00000000000000E+0
    0.00000000000000E+0      0.00000000000000E+0      0.00000000000000E+0
   BmNSMass                 3      35       1     7.00000000000000E+2
7.00000000000000E+2      0.00000000000000E+0      0.00000000000000E+0
0.00000000000000E+0      0.00000000000000E+0      1.00000000000000E+0
```

```
    0.00000000000000E+0      0.00000000000000E+0      0.00000000000000E+0
   BmNSMass                  3      36       1     7.00000000000000E+2
7.00000000000000E+2      0.00000000000000E+0      0.00000000000000E+0
0.00000000000000E+0      0.00000000000000E+0      1.00000000000000E+0
    0.00000000000000E+0      0.00000000000000E+0      0.00000000000000E+0
   BmNSMass                  3      37       1     7.00000000000000E+2
7.00000000000000E+2      0.00000000000000E+0      0.00000000000000E+0
0.00000000000000E+0      0.00000000000000E+0      1.00000000000000E+0
    0.00000000000000E+0      0.00000000000000E+0      0.00000000000000E+0
   BmNSMass                  3      38       1     7.00000000000000E+2
7.00000000000000E+2      0.00000000000000E+0      0.00000000000000E+0
0.00000000000000E+0      0.00000000000000E+0      1.00000000000000E+0
    0.00000000000000E+0      0.00000000000000E+0      0.00000000000000E+0
   BmNSMass                  3      39       1     7.00000000000000E+2
7.00000000000000E+2      0.00000000000000E+0      0.00000000000000E+0
0.00000000000000E+0      0.00000000000000E+0      1.00000000000000E+0
    0.00000000000000E+0      0.00000000000000E+0      0.00000000000000E+0
   BmNSMass                  3      40       1     7.00000000000000E+2
7.00000000000000E+2      0.00000000000000E+0      0.00000000000000E+0
0.00000000000000E+0      0.00000000000000E+0      1.00000000000000E+0
    0.00000000000000E+0      0.00000000000000E+0      0.00000000000000E+0
   BmNSMass                  3      41       1     7.00000000000000E+2
7.00000000000000E+2      0.00000000000000E+0      0.00000000000000E+0
0.00000000000000E+0      0.00000000000000E+0      1.00000000000000E+0
    0.00000000000000E+0      0.00000000000000E+0      0.00000000000000E+0
   BmNSMass                  3      42       1     7.00000000000000E+2
7.00000000000000E+2      0.00000000000000E+0      0.00000000000000E+0
0.00000000000000E+0      0.00000000000000E+0      1.00000000000000E+0
    0.00000000000000E+0      0.00000000000000E+0      0.00000000000000E+0
   BmNSMass                  3      43       1     7.00000000000000E+2
7.00000000000000E+2      0.00000000000000E+0      0.00000000000000E+0
0.00000000000000E+0      0.00000000000000E+0      1.00000000000000E+0
    0.00000000000000E+0      0.00000000000000E+0      0.00000000000000E+0
   BmNSMass                  3      44       1     7.00000000000000E+2
7.00000000000000E+2      0.00000000000000E+0      0.00000000000000E+0
0.00000000000000E+0      0.00000000000000E+0      1.00000000000000E+0
    0.00000000000000E+0      0.00000000000000E+0      0.00000000000000E+0
   BmNSMass                  3      45       1     7.00000000000000E+2
7.00000000000000E+2      0.00000000000000E+0      0.00000000000000E+0
0.00000000000000E+0      0.00000000000000E+0      1.00000000000000E+0
    0.00000000000000E+0      0.00000000000000E+0      0.00000000000000E+0
   BmNSMass                  3      46       1     7.00000000000000E+2
7.00000000000000E+2      0.00000000000000E+0      0.00000000000000E+0
0.00000000000000E+0      0.00000000000000E+0      1.00000000000000E+0
    0.00000000000000E+0      0.00000000000000E+0      0.00000000000000E+0
   BmNSMass                  3      47       1     7.00000000000000E+2
7.00000000000000E+2      0.00000000000000E+0      0.00000000000000E+0
0.00000000000000E+0      0.00000000000000E+0      1.00000000000000E+0
    0.00000000000000E+0      0.00000000000000E+0      0.00000000000000E+0
   BmNSMass                  3      48       1     7.00000000000000E+2
7.00000000000000E+2      0.00000000000000E+0      0.00000000000000E+0
0.00000000000000E+0      0.00000000000000E+0      1.00000000000000E+0
    0.00000000000000E+0      0.00000000000000E+0      0.00000000000000E+0
   BmNSMass                  3      49       1     7.00000000000000E+2
```

```
7.00000000000000E+2      0.00000000000000E+0      0.00000000000000E+0
0.00000000000000E+0      0.00000000000000E+0      1.00000000000000E+0
    0.00000000000000E+0      0.00000000000000E+0      0.00000000000000E+0
   BmNSMass                 3      50       1     7.00000000000000E+2
7.00000000000000E+2      0.00000000000000E+0      0.00000000000000E+0
0.00000000000000E+0      0.00000000000000E+0      1.00000000000000E+0
    0.00000000000000E+0      0.00000000000000E+0      0.00000000000000E+0
   BmNSMass                 3      51       1     7.00000000000000E+2
7.00000000000000E+2      0.00000000000000E+0      0.00000000000000E+0
0.00000000000000E+0      0.00000000000000E+0      1.00000000000000E+0
    0.00000000000000E+0      0.00000000000000E+0      0.00000000000000E+0
   BmNSMass                 3      52       1     7.00000000000000E+2
7.00000000000000E+2      0.00000000000000E+0      0.00000000000000E+0
0.00000000000000E+0      0.00000000000000E+0      1.00000000000000E+0
    0.00000000000000E+0      0.00000000000000E+0      0.00000000000000E+0
   BmNSMass                 3      53       1     7.00000000000000E+2
7.00000000000000E+2      0.00000000000000E+0      0.00000000000000E+0
0.00000000000000E+0      0.00000000000000E+0      1.00000000000000E+0
    0.00000000000000E+0      0.00000000000000E+0      0.00000000000000E+0
   BmNSMass                 3      54       1     7.00000000000000E+2
7.00000000000000E+2      0.00000000000000E+0      0.00000000000000E+0
0.00000000000000E+0      0.00000000000000E+0      1.00000000000000E+0
    0.00000000000000E+0      0.00000000000000E+0      0.00000000000000E+0
   BmNSMass                 3      55       1     7.00000000000000E+2
7.00000000000000E+2      0.00000000000000E+0      0.00000000000000E+0
0.00000000000000E+0      0.00000000000000E+0      1.00000000000000E+0
    0.00000000000000E+0      0.00000000000000E+0      0.00000000000000E+0
   BmNSMass                 3      56       1     7.00000000000000E+2
7.00000000000000E+2      0.00000000000000E+0      0.00000000000000E+0
0.00000000000000E+0      0.00000000000000E+0      1.00000000000000E+0
    0.00000000000000E+0      0.00000000000000E+0      0.00000000000000E+0
   BmNSMass                 3      57       1     7.00000000000000E+2
7.00000000000000E+2      0.00000000000000E+0      0.00000000000000E+0
0.00000000000000E+0      0.00000000000000E+0      1.00000000000000E+0
    0.00000000000000E+0      0.00000000000000E+0      0.00000000000000E+0
   BmNSMass                 3      58       1     7.00000000000000E+2
7.00000000000000E+2      0.00000000000000E+0      0.00000000000000E+0
0.00000000000000E+0      0.00000000000000E+0      1.00000000000000E+0
    0.00000000000000E+0      0.00000000000000E+0      0.00000000000000E+0
   BmNSMass                 3      59       1     7.00000000000000E+2
7.00000000000000E+2      0.00000000000000E+0      0.00000000000000E+0
0.00000000000000E+0      0.00000000000000E+0      1.00000000000000E+0
    0.00000000000000E+0      0.00000000000000E+0      0.00000000000000E+0
   BmNSMass                 3      60       1     7.00000000000000E+2
7.00000000000000E+2      0.00000000000000E+0      0.00000000000000E+0
0.00000000000000E+0      0.00000000000000E+0      1.00000000000000E+0
    0.00000000000000E+0      0.00000000000000E+0      0.00000000000000E+0
   BmNSMass                 3      61       1     7.00000000000000E+2
7.00000000000000E+2      0.00000000000000E+0      0.00000000000000E+0
0.00000000000000E+0      0.00000000000000E+0      1.00000000000000E+0
    0.00000000000000E+0      0.00000000000000E+0      0.00000000000000E+0
   BmNSMass                 3      62       1     7.00000000000000E+2
7.00000000000000E+2      0.00000000000000E+0      0.00000000000000E+0
0.00000000000000E+0      0.00000000000000E+0      1.00000000000000E+0
```

```
    0.00000000000000E+0      0.00000000000000E+0      0.00000000000000E+0
   BmNSMass                  3      63       1     7.00000000000000E+2
7.00000000000000E+2      0.00000000000000E+0      0.00000000000000E+0
0.00000000000000E+0      0.00000000000000E+0      1.00000000000000E+0
    0.00000000000000E+0      0.00000000000000E+0      0.00000000000000E+0
   BmNSMass                  3      64       1     7.00000000000000E+2
7.00000000000000E+2      0.00000000000000E+0      0.00000000000000E+0
0.00000000000000E+0      0.00000000000000E+0      1.00000000000000E+0
    0.00000000000000E+0      0.00000000000000E+0      0.00000000000000E+0
   BmNSMass                  3      65       1     7.00000000000000E+2
7.00000000000000E+2      0.00000000000000E+0      0.00000000000000E+0
0.00000000000000E+0      0.00000000000000E+0      1.00000000000000E+0
    0.00000000000000E+0      0.00000000000000E+0      0.00000000000000E+0
   BmNSMass                  3      66       1     7.00000000000000E+2
7.00000000000000E+2      0.00000000000000E+0      0.00000000000000E+0
0.00000000000000E+0      0.00000000000000E+0      1.00000000000000E+0
    0.00000000000000E+0      0.00000000000000E+0      0.00000000000000E+0
   BmNSMass                  3      67       1     7.00000000000000E+2
7.00000000000000E+2      0.00000000000000E+0      0.00000000000000E+0
0.00000000000000E+0      0.00000000000000E+0      1.00000000000000E+0
    0.00000000000000E+0      0.00000000000000E+0      0.00000000000000E+0
   BmNSMass                  3      68       1     7.00000000000000E+2
7.00000000000000E+2      0.00000000000000E+0      0.00000000000000E+0
0.00000000000000E+0      0.00000000000000E+0      1.00000000000000E+0
    0.00000000000000E+0      0.00000000000000E+0      0.00000000000000E+0
   BmNSMass                  3     164       1     1.50000000000000E+2
1.50000000000000E+2      0.00000000000000E+0      0.00000000000000E+0
0.00000000000000E+0      0.00000000000000E+0      1.00000000000000E+0
    0.00000000000000E+0      0.00000000000000E+0      0.00000000000000E+0
   BmNSMass                  3     165       1     1.50000000000000E+2
1.50000000000000E+2      0.00000000000000E+0      0.00000000000000E+0
0.00000000000000E+0      0.00000000000000E+0      1.00000000000000E+0
    0.00000000000000E+0      0.00000000000000E+0      0.00000000000000E+0
   BmNSMass                  3     166       1     1.50000000000000E+2
1.50000000000000E+2      0.00000000000000E+0      0.00000000000000E+0
0.00000000000000E+0      0.00000000000000E+0      1.00000000000000E+0
    0.00000000000000E+0      0.00000000000000E+0      0.00000000000000E+0
   BmNSMass                  3     167       1     1.50000000000000E+2
1.50000000000000E+2      0.00000000000000E+0      0.00000000000000E+0
0.00000000000000E+0      0.00000000000000E+0      1.00000000000000E+0
    0.00000000000000E+0      0.00000000000000E+0      0.00000000000000E+0
   BmNSMass                  3     168       1     1.50000000000000E+2
1.50000000000000E+2      0.00000000000000E+0      0.00000000000000E+0
0.00000000000000E+0      0.00000000000000E+0      1.00000000000000E+0
    0.00000000000000E+0      0.00000000000000E+0      0.00000000000000E+0
   BmNSMass                  3     169       1     1.50000000000000E+2
1.50000000000000E+2      0.00000000000000E+0      0.00000000000000E+0
0.00000000000000E+0      0.00000000000000E+0      1.00000000000000E+0
    0.00000000000000E+0      0.00000000000000E+0      0.00000000000000E+0
   BmNSMass                  3     170       1     1.50000000000000E+2
1.50000000000000E+2      0.00000000000000E+0      0.00000000000000E+0
0.00000000000000E+0      0.00000000000000E+0      1.00000000000000E+0
    0.00000000000000E+0      0.00000000000000E+0      0.00000000000000E+0
   BmNSMass                  3     171       1     1.50000000000000E+2
```

```
1.50000000000000E+2      0.00000000000000E+0      0.00000000000000E+0
0.00000000000000E+0      0.00000000000000E+0      1.00000000000000E+0
    0.00000000000000E+0      0.00000000000000E+0      0.00000000000000E+0
   BmNSMass                 3     172         1     1.50000000000000E+2
1.50000000000000E+2      0.00000000000000E+0      0.00000000000000E+0
0.00000000000000E+0      0.00000000000000E+0      1.00000000000000E+0
    0.00000000000000E+0      0.00000000000000E+0      0.00000000000000E+0
   BmNSMass                 3     173         1     1.50000000000000E+2
1.50000000000000E+2      0.00000000000000E+0      0.00000000000000E+0
0.00000000000000E+0      0.00000000000000E+0      1.00000000000000E+0
    0.00000000000000E+0      0.00000000000000E+0      0.00000000000000E+0
   BmNSMass                 3     174         1     1.50000000000000E+2
1.50000000000000E+2      0.00000000000000E+0      0.00000000000000E+0
0.00000000000000E+0      0.00000000000000E+0      1.00000000000000E+0
    0.00000000000000E+0      0.00000000000000E+0      0.00000000000000E+0
   BmNSMass                 3     175         1     1.50000000000000E+2
1.50000000000000E+2      0.00000000000000E+0      0.00000000000000E+0
0.00000000000000E+0      0.00000000000000E+0      1.00000000000000E+0
    0.00000000000000E+0      0.00000000000000E+0      0.00000000000000E+0
   BmNSMass                 3     176         1     1.50000000000000E+2
1.50000000000000E+2      0.00000000000000E+0      0.00000000000000E+0
0.00000000000000E+0      0.00000000000000E+0      1.00000000000000E+0
    0.00000000000000E+0      0.00000000000000E+0      0.00000000000000E+0
   BmNSMass                 3     177         1     1.50000000000000E+2
1.50000000000000E+2      0.00000000000000E+0      0.00000000000000E+0
0.00000000000000E+0      0.00000000000000E+0      1.00000000000000E+0
    0.00000000000000E+0      0.00000000000000E+0      0.00000000000000E+0
   BmNSMass                 3     178         1     1.50000000000000E+2
1.50000000000000E+2      0.00000000000000E+0      0.00000000000000E+0
0.00000000000000E+0      0.00000000000000E+0      1.00000000000000E+0
    0.00000000000000E+0      0.00000000000000E+0      0.00000000000000E+0
   BmNSMass                 3     179         1     1.50000000000000E+2
1.50000000000000E+2      0.00000000000000E+0      0.00000000000000E+0
0.00000000000000E+0      0.00000000000000E+0      1.00000000000000E+0
    0.00000000000000E+0      0.00000000000000E+0      0.00000000000000E+0
   BmNSMass                 3     180         1     1.50000000000000E+2
1.50000000000000E+2      0.00000000000000E+0      0.00000000000000E+0
0.00000000000000E+0      0.00000000000000E+0      1.00000000000000E+0
    0.00000000000000E+0      0.00000000000000E+0      0.00000000000000E+0
   BmNSMass                 3     181         1     1.50000000000000E+2
1.50000000000000E+2      0.00000000000000E+0      0.00000000000000E+0
0.00000000000000E+0      0.00000000000000E+0      1.00000000000000E+0
    0.00000000000000E+0      0.00000000000000E+0      0.00000000000000E+0
   BmNSMass                 3     182         1     1.50000000000000E+2
1.50000000000000E+2      0.00000000000000E+0      0.00000000000000E+0
0.00000000000000E+0      0.00000000000000E+0      1.00000000000000E+0
    0.00000000000000E+0      0.00000000000000E+0      0.00000000000000E+0
   BmNSMass                 3     183         1     1.50000000000000E+2
1.50000000000000E+2      0.00000000000000E+0      0.00000000000000E+0
0.00000000000000E+0      0.00000000000000E+0      1.00000000000000E+0
    0.00000000000000E+0      0.00000000000000E+0      0.00000000000000E+0
   BmNSMass                 3     184         1     1.50000000000000E+2
1.50000000000000E+2      0.00000000000000E+0      0.00000000000000E+0
0.00000000000000E+0      0.00000000000000E+0      1.00000000000000E+0
```

```
    0.00000000000000E+0      0.00000000000000E+0      0.00000000000000E+0
   BmNSMass                 3     185       1     1.50000000000000E+2
1.50000000000000E+2      0.00000000000000E+0      0.00000000000000E+0
0.00000000000000E+0      0.00000000000000E+0      1.00000000000000E+0
    0.00000000000000E+0      0.00000000000000E+0      0.00000000000000E+0
   BmNSMass                 3     186       1     1.50000000000000E+2
1.50000000000000E+2      0.00000000000000E+0      0.00000000000000E+0
0.00000000000000E+0      0.00000000000000E+0      1.00000000000000E+0
    0.00000000000000E+0      0.00000000000000E+0      0.00000000000000E+0
   BmNSMass                 3     187       1     1.50000000000000E+2
1.50000000000000E+2      0.00000000000000E+0      0.00000000000000E+0
0.00000000000000E+0      0.00000000000000E+0      1.00000000000000E+0
    0.00000000000000E+0      0.00000000000000E+0      0.00000000000000E+0
   BmNSMass                 3     188       1     1.50000000000000E+2
1.50000000000000E+2      0.00000000000000E+0      0.00000000000000E+0
0.00000000000000E+0      0.00000000000000E+0      1.00000000000000E+0
    0.00000000000000E+0      0.00000000000000E+0      0.00000000000000E+0
   BmNSMass                 3     189       1     1.50000000000000E+2
1.50000000000000E+2      0.00000000000000E+0      0.00000000000000E+0
0.00000000000000E+0      0.00000000000000E+0      1.00000000000000E+0
    0.00000000000000E+0      0.00000000000000E+0      0.00000000000000E+0
   BmNSMass                 3     190       1     1.50000000000000E+2
1.50000000000000E+2      0.00000000000000E+0      0.00000000000000E+0
0.00000000000000E+0      0.00000000000000E+0      1.00000000000000E+0
    0.00000000000000E+0      0.00000000000000E+0      0.00000000000000E+0
   BmNSMass                 3     191       1     1.50000000000000E+2
1.50000000000000E+2      0.00000000000000E+0      0.00000000000000E+0
0.00000000000000E+0      0.00000000000000E+0      1.00000000000000E+0
    0.00000000000000E+0      0.00000000000000E+0      0.00000000000000E+0
   BmNSMass                 3     192       1     1.50000000000000E+2
1.50000000000000E+2      0.00000000000000E+0      0.00000000000000E+0
0.00000000000000E+0      0.00000000000000E+0      1.00000000000000E+0
    0.00000000000000E+0      0.00000000000000E+0      0.00000000000000E+0
   BmNSMass                 3     193       1     1.50000000000000E+2
1.50000000000000E+2      0.00000000000000E+0      0.00000000000000E+0
0.00000000000000E+0      0.00000000000000E+0      1.00000000000000E+0
    0.00000000000000E+0      0.00000000000000E+0      0.00000000000000E+0
   BmNSMass                 3     194       1     1.50000000000000E+2
1.50000000000000E+2      0.00000000000000E+0      0.00000000000000E+0
0.00000000000000E+0      0.00000000000000E+0      1.00000000000000E+0
    0.00000000000000E+0      0.00000000000000E+0      0.00000000000000E+0
   BmNSMass                 3     195       1     1.50000000000000E+2
1.50000000000000E+2      0.00000000000000E+0      0.00000000000000E+0
0.00000000000000E+0      0.00000000000000E+0      1.00000000000000E+0
    0.00000000000000E+0      0.00000000000000E+0      0.00000000000000E+0
   BmNSMass                 3     196       1     1.50000000000000E+2
1.50000000000000E+2      0.00000000000000E+0      0.00000000000000E+0
0.00000000000000E+0      0.00000000000000E+0      1.00000000000000E+0
    0.00000000000000E+0      0.00000000000000E+0      0.00000000000000E+0
   BmNSMass                 3     197       1     1.50000000000000E+2
1.50000000000000E+2      0.00000000000000E+0      0.00000000000000E+0
0.00000000000000E+0      0.00000000000000E+0      1.00000000000000E+0
    0.00000000000000E+0      0.00000000000000E+0      0.00000000000000E+0
   BmNSMass                 3     198       1     1.50000000000000E+2
```

```
1.50000000000000E+2      0.00000000000000E+0      0.00000000000000E+0
0.00000000000000E+0      0.00000000000000E+0      1.00000000000000E+0
    0.00000000000000E+0      0.00000000000000E+0      0.00000000000000E+0
   BmNSMass                3      199        1      1.50000000000000E+2
1.50000000000000E+2      0.00000000000000E+0      0.00000000000000E+0
0.00000000000000E+0      0.00000000000000E+0      1.00000000000000E+0
    0.00000000000000E+0      0.00000000000000E+0      0.00000000000000E+0
   BmNSMass                3      200        1      1.50000000000000E+2
1.50000000000000E+2      0.00000000000000E+0      0.00000000000000E+0
0.00000000000000E+0      0.00000000000000E+0      1.00000000000000E+0
    0.00000000000000E+0      0.00000000000000E+0      0.00000000000000E+0
   BmNSMass                3      201        1      1.50000000000000E+2
1.50000000000000E+2      0.00000000000000E+0      0.00000000000000E+0
0.00000000000000E+0      0.00000000000000E+0      1.00000000000000E+0
    0.00000000000000E+0      0.00000000000000E+0      0.00000000000000E+0
   BmNSMass                3      202        1      1.50000000000000E+2
1.50000000000000E+2      0.00000000000000E+0      0.00000000000000E+0
0.00000000000000E+0      0.00000000000000E+0      1.00000000000000E+0
    0.00000000000000E+0      0.00000000000000E+0      0.00000000000000E+0
   BmNSMass                3      203        1      1.50000000000000E+2
1.50000000000000E+2      0.00000000000000E+0      0.00000000000000E+0
0.00000000000000E+0      0.00000000000000E+0      1.00000000000000E+0
    0.00000000000000E+0      0.00000000000000E+0      0.00000000000000E+0
   BmNSMass                3      204        1      1.50000000000000E+2
1.50000000000000E+2      0.00000000000000E+0      0.00000000000000E+0
0.00000000000000E+0      0.00000000000000E+0      1.00000000000000E+0
    0.00000000000000E+0      0.00000000000000E+0      0.00000000000000E+0
   BmNSMass                3      205        1      1.50000000000000E+2
1.50000000000000E+2      0.00000000000000E+0      0.00000000000000E+0
0.00000000000000E+0      0.00000000000000E+0      1.00000000000000E+0
    0.00000000000000E+0      0.00000000000000E+0      0.00000000000000E+0
   BmNSMass                3      206        1      1.50000000000000E+2
1.50000000000000E+2      0.00000000000000E+0      0.00000000000000E+0
0.00000000000000E+0      0.00000000000000E+0      1.00000000000000E+0
    0.00000000000000E+0      0.00000000000000E+0      0.00000000000000E+0
   BmNSMass                3      207        1      1.50000000000000E+2
1.50000000000000E+2      0.00000000000000E+0      0.00000000000000E+0
0.00000000000000E+0      0.00000000000000E+0      1.00000000000000E+0
    0.00000000000000E+0      0.00000000000000E+0      0.00000000000000E+0
   BmNSMass                3      208        1      1.50000000000000E+2
1.50000000000000E+2      0.00000000000000E+0      0.00000000000000E+0
0.00000000000000E+0      0.00000000000000E+0      1.00000000000000E+0
    0.00000000000000E+0      0.00000000000000E+0      0.00000000000000E+0
   BmNSMass                3      209        1      1.50000000000000E+2
1.50000000000000E+2      0.00000000000000E+0      0.00000000000000E+0
0.00000000000000E+0      0.00000000000000E+0      1.00000000000000E+0
    0.00000000000000E+0      0.00000000000000E+0      0.00000000000000E+0
   BmNSMass                3      210        1      1.50000000000000E+2
1.50000000000000E+2      0.00000000000000E+0      0.00000000000000E+0
0.00000000000000E+0      0.00000000000000E+0      1.00000000000000E+0
    0.00000000000000E+0      0.00000000000000E+0      0.00000000000000E+0
   BmNSMass                3      211        1      1.50000000000000E+2
1.50000000000000E+2      0.00000000000000E+0      0.00000000000000E+0
0.00000000000000E+0      0.00000000000000E+0      1.00000000000000E+0
```

```
    0.00000000000000E+0      0.00000000000000E+0      0.00000000000000E+0
   BmNSMass                 3     212         1     1.50000000000000E+2
1.50000000000000E+2      0.00000000000000E+0      0.00000000000000E+0
0.00000000000000E+0      0.00000000000000E+0      1.00000000000000E+0
    0.00000000000000E+0      0.00000000000000E+0      0.00000000000000E+0
   BmNSMass                 3     213         1     1.50000000000000E+2
1.50000000000000E+2      0.00000000000000E+0      0.00000000000000E+0
0.00000000000000E+0      0.00000000000000E+0      1.00000000000000E+0
    0.00000000000000E+0      0.00000000000000E+0      0.00000000000000E+0
   BmNSMass                 3     214         1     1.50000000000000E+2
1.50000000000000E+2      0.00000000000000E+0      0.00000000000000E+0
0.00000000000000E+0      0.00000000000000E+0      1.00000000000000E+0
    0.00000000000000E+0      0.00000000000000E+0      0.00000000000000E+0
   BmNSMass                 3     215         1     1.50000000000000E+2
1.50000000000000E+2      0.00000000000000E+0      0.00000000000000E+0
0.00000000000000E+0      0.00000000000000E+0      1.00000000000000E+0
    0.00000000000000E+0      0.00000000000000E+0      0.00000000000000E+0
   BmNSMass                 3     216         1     1.50000000000000E+2
1.50000000000000E+2      0.00000000000000E+0      0.00000000000000E+0
0.00000000000000E+0      0.00000000000000E+0      1.00000000000000E+0
    0.00000000000000E+0      0.00000000000000E+0      0.00000000000000E+0
   BmNSMass                 3     217         1     1.50000000000000E+2
1.50000000000000E+2      0.00000000000000E+0      0.00000000000000E+0
0.00000000000000E+0      0.00000000000000E+0      1.00000000000000E+0
    0.00000000000000E+0      0.00000000000000E+0      0.00000000000000E+0
   BmNSMass                 3     218         1     3.00000000000000E+2
3.00000000000000E+2      0.00000000000000E+0      0.00000000000000E+0
0.00000000000000E+0      0.00000000000000E+0      1.00000000000000E+0
    0.00000000000000E+0      0.00000000000000E+0      0.00000000000000E+0
   BmNSMass                 3     219         1     3.00000000000000E+2
3.00000000000000E+2      0.00000000000000E+0      0.00000000000000E+0
0.00000000000000E+0      0.00000000000000E+0      1.00000000000000E+0
    0.00000000000000E+0      0.00000000000000E+0      0.00000000000000E+0
   BmNSMass                 3     220         1     3.00000000000000E+2
3.00000000000000E+2      0.00000000000000E+0      0.00000000000000E+0
0.00000000000000E+0      0.00000000000000E+0      1.00000000000000E+0
    0.00000000000000E+0      0.00000000000000E+0      0.00000000000000E+0
   BmNSMass                 3     221         1     3.00000000000000E+2
3.00000000000000E+2      0.00000000000000E+0      0.00000000000000E+0
0.00000000000000E+0      0.00000000000000E+0      1.00000000000000E+0
    0.00000000000000E+0      0.00000000000000E+0      0.00000000000000E+0
   BmNSMass                 3     222         1     3.00000000000000E+2
3.00000000000000E+2      0.00000000000000E+0      0.00000000000000E+0
0.00000000000000E+0      0.00000000000000E+0      1.00000000000000E+0
    0.00000000000000E+0      0.00000000000000E+0      0.00000000000000E+0
   BmNSMass                 3     223         1     3.00000000000000E+2
3.00000000000000E+2      0.00000000000000E+0      0.00000000000000E+0
0.00000000000000E+0      0.00000000000000E+0      1.00000000000000E+0
    0.00000000000000E+0      0.00000000000000E+0      0.00000000000000E+0
   BmNSMass                 3     224         1     3.00000000000000E+2
3.00000000000000E+2      0.00000000000000E+0      0.00000000000000E+0
0.00000000000000E+0      0.00000000000000E+0      1.00000000000000E+0
    0.00000000000000E+0      0.00000000000000E+0      0.00000000000000E+0
   BmNSMass                 3     225         1     3.00000000000000E+2
```

```
3.00000000000000E+2      0.00000000000000E+0      0.00000000000000E+0
0.00000000000000E+0      0.00000000000000E+0      1.00000000000000E+0
    0.00000000000000E+0      0.00000000000000E+0      0.00000000000000E+0
   BmNSMass                 3     226       1     3.00000000000000E+2
3.00000000000000E+2      0.00000000000000E+0      0.00000000000000E+0
0.00000000000000E+0      0.00000000000000E+0      1.00000000000000E+0
    0.00000000000000E+0      0.00000000000000E+0      0.00000000000000E+0
   BmNSMass                 3     227       1     3.00000000000000E+2
3.00000000000000E+2      0.00000000000000E+0      0.00000000000000E+0
0.00000000000000E+0      0.00000000000000E+0      1.00000000000000E+0
    0.00000000000000E+0      0.00000000000000E+0      0.00000000000000E+0
   BmNSMass                 3     228       1     3.00000000000000E+2
3.00000000000000E+2      0.00000000000000E+0      0.00000000000000E+0
0.00000000000000E+0      0.00000000000000E+0      1.00000000000000E+0
    0.00000000000000E+0      0.00000000000000E+0      0.00000000000000E+0
   BmNSMass                 3     229       1     3.00000000000000E+2
3.00000000000000E+2      0.00000000000000E+0      0.00000000000000E+0
0.00000000000000E+0      0.00000000000000E+0      1.00000000000000E+0
    0.00000000000000E+0      0.00000000000000E+0      0.00000000000000E+0
   BmNSMass                 3     230       1     3.00000000000000E+2
3.00000000000000E+2      0.00000000000000E+0      0.00000000000000E+0
0.00000000000000E+0      0.00000000000000E+0      1.00000000000000E+0
    0.00000000000000E+0      0.00000000000000E+0      0.00000000000000E+0
   BmNSMass                 3     231       1     3.00000000000000E+2
3.00000000000000E+2      0.00000000000000E+0      0.00000000000000E+0
0.00000000000000E+0      0.00000000000000E+0      1.00000000000000E+0
    0.00000000000000E+0      0.00000000000000E+0      0.00000000000000E+0
   BmNSMass                 3     232       1     3.00000000000000E+2
3.00000000000000E+2      0.00000000000000E+0      0.00000000000000E+0
0.00000000000000E+0      0.00000000000000E+0      1.00000000000000E+0
    0.00000000000000E+0      0.00000000000000E+0      0.00000000000000E+0
   BmNSMass                 3     233       1     3.00000000000000E+2
3.00000000000000E+2      0.00000000000000E+0      0.00000000000000E+0
0.00000000000000E+0      0.00000000000000E+0      1.00000000000000E+0
    0.00000000000000E+0      0.00000000000000E+0      0.00000000000000E+0
   BmNSMass                 3     234       1     3.00000000000000E+2
3.00000000000000E+2      0.00000000000000E+0      0.00000000000000E+0
0.00000000000000E+0      0.00000000000000E+0      1.00000000000000E+0
    0.00000000000000E+0      0.00000000000000E+0      0.00000000000000E+0
   BmNSMass                 3     235       1     3.00000000000000E+2
3.00000000000000E+2      0.00000000000000E+0      0.00000000000000E+0
0.00000000000000E+0      0.00000000000000E+0      1.00000000000000E+0
    0.00000000000000E+0      0.00000000000000E+0      0.00000000000000E+0
   BmNSMass                 3     236       1     3.00000000000000E+2
3.00000000000000E+2      0.00000000000000E+0      0.00000000000000E+0
0.00000000000000E+0      0.00000000000000E+0      1.00000000000000E+0
    0.00000000000000E+0      0.00000000000000E+0      0.00000000000000E+0
   BmNSMass                 3     237       1     3.00000000000000E+2
3.00000000000000E+2      0.00000000000000E+0      0.00000000000000E+0
0.00000000000000E+0      0.00000000000000E+0      1.00000000000000E+0
    0.00000000000000E+0      0.00000000000000E+0      0.00000000000000E+0
   BmNSMass                 3     238       1     3.00000000000000E+2
3.00000000000000E+2      0.00000000000000E+0      0.00000000000000E+0
0.00000000000000E+0      0.00000000000000E+0      1.00000000000000E+0
```

```
    0.00000000000000E+0      0.00000000000000E+0      0.00000000000000E+0
   BmNSMass                  3     239       1     3.00000000000000E+2
3.00000000000000E+2      0.00000000000000E+0      0.00000000000000E+0
0.00000000000000E+0      0.00000000000000E+0      1.00000000000000E+0
    0.00000000000000E+0      0.00000000000000E+0      0.00000000000000E+0
   BmNSMass                  3     240       1     3.00000000000000E+2
3.00000000000000E+2      0.00000000000000E+0      0.00000000000000E+0
0.00000000000000E+0      0.00000000000000E+0      1.00000000000000E+0
    0.00000000000000E+0      0.00000000000000E+0      0.00000000000000E+0
   BmNSMass                  3     241       1     3.00000000000000E+2
3.00000000000000E+2      0.00000000000000E+0      0.00000000000000E+0
0.00000000000000E+0      0.00000000000000E+0      1.00000000000000E+0
    0.00000000000000E+0      0.00000000000000E+0      0.00000000000000E+0
   BmNSMass                  3     242       1     3.00000000000000E+2
3.00000000000000E+2      0.00000000000000E+0      0.00000000000000E+0
0.00000000000000E+0      0.00000000000000E+0      1.00000000000000E+0
    0.00000000000000E+0      0.00000000000000E+0      0.00000000000000E+0
   BmNSMass                  3     243       1     3.00000000000000E+2
3.00000000000000E+2      0.00000000000000E+0      0.00000000000000E+0
0.00000000000000E+0      0.00000000000000E+0      1.00000000000000E+0
    0.00000000000000E+0      0.00000000000000E+0      0.00000000000000E+0
   BmNSMass                  3     244       1     3.00000000000000E+2
3.00000000000000E+2      0.00000000000000E+0      0.00000000000000E+0
0.00000000000000E+0      0.00000000000000E+0      1.00000000000000E+0
    0.00000000000000E+0      0.00000000000000E+0      0.00000000000000E+0
   BmNSMass                  3     245       1     3.00000000000000E+2
3.00000000000000E+2      0.00000000000000E+0      0.00000000000000E+0
0.00000000000000E+0      0.00000000000000E+0      1.00000000000000E+0
    0.00000000000000E+0      0.00000000000000E+0      0.00000000000000E+0
   BmNSMass                  3     246       1     3.00000000000000E+2
3.00000000000000E+2      0.00000000000000E+0      0.00000000000000E+0
0.00000000000000E+0      0.00000000000000E+0      1.00000000000000E+0
    0.00000000000000E+0      0.00000000000000E+0      0.00000000000000E+0
   BmNSMass                  3     247       1     3.00000000000000E+2
3.00000000000000E+2      0.00000000000000E+0      0.00000000000000E+0
0.00000000000000E+0      0.00000000000000E+0      1.00000000000000E+0
    0.00000000000000E+0      0.00000000000000E+0      0.00000000000000E+0
   BmNSMass                  3     248       1     3.00000000000000E+2
3.00000000000000E+2      0.00000000000000E+0      0.00000000000000E+0
0.00000000000000E+0      0.00000000000000E+0      1.00000000000000E+0
    0.00000000000000E+0      0.00000000000000E+0      0.00000000000000E+0
   BmNSMass                  3     249       1     3.00000000000000E+2
3.00000000000000E+2      0.00000000000000E+0      0.00000000000000E+0
0.00000000000000E+0      0.00000000000000E+0      1.00000000000000E+0
    0.00000000000000E+0      0.00000000000000E+0      0.00000000000000E+0
   BmNSMass                  3     250       1     3.00000000000000E+2
3.00000000000000E+2      0.00000000000000E+0      0.00000000000000E+0
0.00000000000000E+0      0.00000000000000E+0      1.00000000000000E+0
    0.00000000000000E+0      0.00000000000000E+0      0.00000000000000E+0
   BmNSMass                  3     251       1     3.00000000000000E+2
3.00000000000000E+2      0.00000000000000E+0      0.00000000000000E+0
0.00000000000000E+0      0.00000000000000E+0      1.00000000000000E+0
    0.00000000000000E+0      0.00000000000000E+0      0.00000000000000E+0
   BmNSMass                  3     252       1     3.00000000000000E+2
```

```
3.00000000000000E+2      0.00000000000000E+0      0.00000000000000E+0
0.00000000000000E+0      0.00000000000000E+0      1.00000000000000E+0
    0.00000000000000E+0      0.00000000000000E+0      0.00000000000000E+0
   BmNSMass                 3     253       1     3.00000000000000E+2
3.00000000000000E+2      0.00000000000000E+0      0.00000000000000E+0
0.00000000000000E+0      0.00000000000000E+0      1.00000000000000E+0
    0.00000000000000E+0      0.00000000000000E+0      0.00000000000000E+0
   BmNSMass                 3     254       1     3.00000000000000E+2
3.00000000000000E+2      0.00000000000000E+0      0.00000000000000E+0
0.00000000000000E+0      0.00000000000000E+0      1.00000000000000E+0
    0.00000000000000E+0      0.00000000000000E+0      0.00000000000000E+0
   BmNSMass                 3     255       1     3.00000000000000E+2
3.00000000000000E+2      0.00000000000000E+0      0.00000000000000E+0
0.00000000000000E+0      0.00000000000000E+0      1.00000000000000E+0
    0.00000000000000E+0      0.00000000000000E+0      0.00000000000000E+0
   BmNSMass                 3     256       1     3.00000000000000E+2
3.00000000000000E+2      0.00000000000000E+0      0.00000000000000E+0
0.00000000000000E+0      0.00000000000000E+0      1.00000000000000E+0
    0.00000000000000E+0      0.00000000000000E+0      0.00000000000000E+0
   BmNSMass                 3     257       1     3.00000000000000E+2
3.00000000000000E+2      0.00000000000000E+0      0.00000000000000E+0
0.00000000000000E+0      0.00000000000000E+0      1.00000000000000E+0
    0.00000000000000E+0      0.00000000000000E+0      0.00000000000000E+0
   BmNSMass                 3     258       1     3.00000000000000E+2
3.00000000000000E+2      0.00000000000000E+0      0.00000000000000E+0
0.00000000000000E+0      0.00000000000000E+0      1.00000000000000E+0
    0.00000000000000E+0      0.00000000000000E+0      0.00000000000000E+0
   BmNSMass                 3     259       1     3.00000000000000E+2
3.00000000000000E+2      0.00000000000000E+0      0.00000000000000E+0
0.00000000000000E+0      0.00000000000000E+0      1.00000000000000E+0
    0.00000000000000E+0      0.00000000000000E+0      0.00000000000000E+0
   BmNSMass                 3     260       1     3.00000000000000E+2
3.00000000000000E+2      0.00000000000000E+0      0.00000000000000E+0
0.00000000000000E+0      0.00000000000000E+0      1.00000000000000E+0
    0.00000000000000E+0      0.00000000000000E+0      0.00000000000000E+0
   BmNSMass                 3     261       1     3.00000000000000E+2
3.00000000000000E+2      0.00000000000000E+0      0.00000000000000E+0
0.00000000000000E+0      0.00000000000000E+0      1.00000000000000E+0
    0.00000000000000E+0      0.00000000000000E+0      0.00000000000000E+0
   BmNSMass                 3     262       1     3.00000000000000E+2
3.00000000000000E+2      0.00000000000000E+0      0.00000000000000E+0
0.00000000000000E+0      0.00000000000000E+0      1.00000000000000E+0
    0.00000000000000E+0      0.00000000000000E+0      0.00000000000000E+0
   BmNSMass                 3     263       1     3.00000000000000E+2
3.00000000000000E+2      0.00000000000000E+0      0.00000000000000E+0
0.00000000000000E+0      0.00000000000000E+0      1.00000000000000E+0
    0.00000000000000E+0      0.00000000000000E+0      0.00000000000000E+0
   BmNSMass                 3     264       1     3.00000000000000E+2
3.00000000000000E+2      0.00000000000000E+0      0.00000000000000E+0
0.00000000000000E+0      0.00000000000000E+0      1.00000000000000E+0
    0.00000000000000E+0      0.00000000000000E+0      0.00000000000000E+0
   BmNSMass                 3     265       1     3.00000000000000E+2
3.00000000000000E+2      0.00000000000000E+0      0.00000000000000E+0
0.00000000000000E+0      0.00000000000000E+0      1.00000000000000E+0
```

```
    0.00000000000000E+0      0.00000000000000E+0      0.00000000000000E+0
   BmNSMass                  3     266       1     3.00000000000000E+2
3.00000000000000E+2      0.00000000000000E+0      0.00000000000000E+0
0.00000000000000E+0      0.00000000000000E+0      1.00000000000000E+0
    0.00000000000000E+0      0.00000000000000E+0      0.00000000000000E+0
   BmNSMass                  3     267       1     3.00000000000000E+2
3.00000000000000E+2      0.00000000000000E+0      0.00000000000000E+0
0.00000000000000E+0      0.00000000000000E+0      1.00000000000000E+0
    0.00000000000000E+0      0.00000000000000E+0      0.00000000000000E+0
   BmNSMass                  3     268       1     3.00000000000000E+2
3.00000000000000E+2      0.00000000000000E+0      0.00000000000000E+0
0.00000000000000E+0      0.00000000000000E+0      1.00000000000000E+0
    0.00000000000000E+0      0.00000000000000E+0      0.00000000000000E+0
   BmNSMass                  3     269       1     3.00000000000000E+2
3.00000000000000E+2      0.00000000000000E+0      0.00000000000000E+0
0.00000000000000E+0      0.00000000000000E+0      1.00000000000000E+0
    0.00000000000000E+0      0.00000000000000E+0      0.00000000000000E+0
   BmNSMass                  3     270       1     3.00000000000000E+2
3.00000000000000E+2      0.00000000000000E+0      0.00000000000000E+0
0.00000000000000E+0      0.00000000000000E+0      1.00000000000000E+0
    0.00000000000000E+0      0.00000000000000E+0      0.00000000000000E+0
   BmNSMass                  3     271       1     3.00000000000000E+2
3.00000000000000E+2      0.00000000000000E+0      0.00000000000000E+0
0.00000000000000E+0      0.00000000000000E+0      1.00000000000000E+0
    0.00000000000000E+0      0.00000000000000E+0      0.00000000000000E+0
   BmNSMass                  3     272       1     3.00000000000000E+2
3.00000000000000E+2      0.00000000000000E+0      0.00000000000000E+0
0.00000000000000E+0      0.00000000000000E+0      1.00000000000000E+0
    0.00000000000000E+0      0.00000000000000E+0      0.00000000000000E+0
   BmNSMass                  3     273       1     3.00000000000000E+2
3.00000000000000E+2      0.00000000000000E+0      0.00000000000000E+0
0.00000000000000E+0      0.00000000000000E+0      1.00000000000000E+0
    0.00000000000000E+0      0.00000000000000E+0      0.00000000000000E+0
   BmNSMass                  3     274       1     3.00000000000000E+2
3.00000000000000E+2      0.00000000000000E+0      0.00000000000000E+0
0.00000000000000E+0      0.00000000000000E+0      1.00000000000000E+0
    0.00000000000000E+0      0.00000000000000E+0      0.00000000000000E+0
   BmNSMass                  3     275       1     3.00000000000000E+2
3.00000000000000E+2      0.00000000000000E+0      0.00000000000000E+0
0.00000000000000E+0      0.00000000000000E+0      1.00000000000000E+0
    0.00000000000000E+0      0.00000000000000E+0      0.00000000000000E+0
   BmNSMass                  3     276       1     3.00000000000000E+2
3.00000000000000E+2      0.00000000000000E+0      0.00000000000000E+0
0.00000000000000E+0      0.00000000000000E+0      1.00000000000000E+0
    0.00000000000000E+0      0.00000000000000E+0      0.00000000000000E+0
   BmNSMass                  3     277       1     3.00000000000000E+2
3.00000000000000E+2      0.00000000000000E+0      0.00000000000000E+0
0.00000000000000E+0      0.00000000000000E+0      1.00000000000000E+0
    0.00000000000000E+0      0.00000000000000E+0      0.00000000000000E+0
   BmNSMass                  3     278       1     3.00000000000000E+2
3.00000000000000E+2      0.00000000000000E+0      0.00000000000000E+0
0.00000000000000E+0      0.00000000000000E+0      1.00000000000000E+0
    0.00000000000000E+0      0.00000000000000E+0      0.00000000000000E+0
   BmNSMass                  3     279       1     3.00000000000000E+2
```

```
3.00000000000000E+2      0.00000000000000E+0      0.00000000000000E+0
0.00000000000000E+0      0.00000000000000E+0      1.00000000000000E+0
    0.00000000000000E+0      0.00000000000000E+0      0.00000000000000E+0
   BmNSMass                 3     280       1     3.00000000000000E+2
3.00000000000000E+2      0.00000000000000E+0      0.00000000000000E+0
0.00000000000000E+0      0.00000000000000E+0      1.00000000000000E+0
    0.00000000000000E+0      0.00000000000000E+0      0.00000000000000E+0
   BmNSMass                 3     281       1     3.00000000000000E+2
3.00000000000000E+2      0.00000000000000E+0      0.00000000000000E+0
0.00000000000000E+0      0.00000000000000E+0      1.00000000000000E+0
    0.00000000000000E+0      0.00000000000000E+0      0.00000000000000E+0
   BmNSMass                 3     282       1     3.00000000000000E+2
3.00000000000000E+2      0.00000000000000E+0      0.00000000000000E+0
0.00000000000000E+0      0.00000000000000E+0      1.00000000000000E+0
    0.00000000000000E+0      0.00000000000000E+0      0.00000000000000E+0
   BmNSMass                 3     283       1     3.00000000000000E+2
3.00000000000000E+2      0.00000000000000E+0      0.00000000000000E+0
0.00000000000000E+0      0.00000000000000E+0      1.00000000000000E+0
    0.00000000000000E+0      0.00000000000000E+0      0.00000000000000E+0
   BmNSMass                 3     284       1     3.00000000000000E+2
3.00000000000000E+2      0.00000000000000E+0      0.00000000000000E+0
0.00000000000000E+0      0.00000000000000E+0      1.00000000000000E+0
    0.00000000000000E+0      0.00000000000000E+0      0.00000000000000E+0
   BmNSMass                 3     285       1     3.00000000000000E+2
3.00000000000000E+2      0.00000000000000E+0      0.00000000000000E+0
0.00000000000000E+0      0.00000000000000E+0      1.00000000000000E+0
    0.00000000000000E+0      0.00000000000000E+0      0.00000000000000E+0
   BmNSMass                 3     286       1     3.00000000000000E+2
3.00000000000000E+2      0.00000000000000E+0      0.00000000000000E+0
0.00000000000000E+0      0.00000000000000E+0      1.00000000000000E+0
    0.00000000000000E+0      0.00000000000000E+0      0.00000000000000E+0
   BmNSMass                 3     287       1     3.00000000000000E+2
3.00000000000000E+2      0.00000000000000E+0      0.00000000000000E+0
0.00000000000000E+0      0.00000000000000E+0      1.00000000000000E+0
    0.00000000000000E+0      0.00000000000000E+0      0.00000000000000E+0
   BmNSMass                 3     288       1     3.00000000000000E+2
3.00000000000000E+2      0.00000000000000E+0      0.00000000000000E+0
0.00000000000000E+0      0.00000000000000E+0      1.00000000000000E+0
    0.00000000000000E+0      0.00000000000000E+0      0.00000000000000E+0
   BmNSMass                 3     289       1     3.00000000000000E+2
3.00000000000000E+2      0.00000000000000E+0      0.00000000000000E+0
0.00000000000000E+0      0.00000000000000E+0      1.00000000000000E+0
    0.00000000000000E+0      0.00000000000000E+0      0.00000000000000E+0
   BmNSMass                 3     290       1     3.00000000000000E+2
3.00000000000000E+2      0.00000000000000E+0      0.00000000000000E+0
0.00000000000000E+0      0.00000000000000E+0      1.00000000000000E+0
    0.00000000000000E+0      0.00000000000000E+0      0.00000000000000E+0
   BmNSMass                 3     291       1     3.00000000000000E+2
3.00000000000000E+2      0.00000000000000E+0      0.00000000000000E+0
0.00000000000000E+0      0.00000000000000E+0      1.00000000000000E+0
    0.00000000000000E+0      0.00000000000000E+0      0.00000000000000E+0
   BmNSMass                 3     292       1     3.00000000000000E+2
3.00000000000000E+2      0.00000000000000E+0      0.00000000000000E+0
0.00000000000000E+0      0.00000000000000E+0      1.00000000000000E+0
```

```
    0.00000000000000E+0      0.00000000000000E+0      0.00000000000000E+0
   BmNSMass                  3     293       1     3.00000000000000E+2
3.00000000000000E+2      0.00000000000000E+0      0.00000000000000E+0
0.00000000000000E+0      0.00000000000000E+0      1.00000000000000E+0
    0.00000000000000E+0      0.00000000000000E+0      0.00000000000000E+0
   BmNSMass                  3     294       1     3.00000000000000E+2
3.00000000000000E+2      0.00000000000000E+0      0.00000000000000E+0
0.00000000000000E+0      0.00000000000000E+0      1.00000000000000E+0
    0.00000000000000E+0      0.00000000000000E+0      0.00000000000000E+0
   BmNSMass                  3     295       1     3.00000000000000E+2
3.00000000000000E+2      0.00000000000000E+0      0.00000000000000E+0
0.00000000000000E+0      0.00000000000000E+0      1.00000000000000E+0
    0.00000000000000E+0      0.00000000000000E+0      0.00000000000000E+0
   BmNSMass                  3     296       1     3.00000000000000E+2
3.00000000000000E+2      0.00000000000000E+0      0.00000000000000E+0
0.00000000000000E+0      0.00000000000000E+0      1.00000000000000E+0
    0.00000000000000E+0      0.00000000000000E+0      0.00000000000000E+0
   BmNSMass                  3     297       1     3.00000000000000E+2
3.00000000000000E+2      0.00000000000000E+0      0.00000000000000E+0
0.00000000000000E+0      0.00000000000000E+0      1.00000000000000E+0
    0.00000000000000E+0      0.00000000000000E+0      0.00000000000000E+0
   BmNSMass                  3     298       1     3.00000000000000E+2
3.00000000000000E+2      0.00000000000000E+0      0.00000000000000E+0
0.00000000000000E+0      0.00000000000000E+0      1.00000000000000E+0
    0.00000000000000E+0      0.00000000000000E+0      0.00000000000000E+0
   BmNSMass                  3     299       1     3.00000000000000E+2
3.00000000000000E+2      0.00000000000000E+0      0.00000000000000E+0
0.00000000000000E+0      0.00000000000000E+0      1.00000000000000E+0
    0.00000000000000E+0      0.00000000000000E+0      0.00000000000000E+0
   BmNSMass                  3     300       1     3.00000000000000E+2
3.00000000000000E+2      0.00000000000000E+0      0.00000000000000E+0
0.00000000000000E+0      0.00000000000000E+0      1.00000000000000E+0
    0.00000000000000E+0      0.00000000000000E+0      0.00000000000000E+0
   BmNSMass                  3     301       1     3.00000000000000E+2
3.00000000000000E+2      0.00000000000000E+0      0.00000000000000E+0
0.00000000000000E+0      0.00000000000000E+0      1.00000000000000E+0
    0.00000000000000E+0      0.00000000000000E+0      0.00000000000000E+0
   BmNSMass                  3     302       1     3.00000000000000E+2
3.00000000000000E+2      0.00000000000000E+0      0.00000000000000E+0
0.00000000000000E+0      0.00000000000000E+0      1.00000000000000E+0
    0.00000000000000E+0      0.00000000000000E+0      0.00000000000000E+0
   BmNSMass                  3     303       1     3.00000000000000E+2
3.00000000000000E+2      0.00000000000000E+0      0.00000000000000E+0
0.00000000000000E+0      0.00000000000000E+0      1.00000000000000E+0
    0.00000000000000E+0      0.00000000000000E+0      0.00000000000000E+0
   BmNSMass                  3     304       1     3.00000000000000E+2
3.00000000000000E+2      0.00000000000000E+0      0.00000000000000E+0
0.00000000000000E+0      0.00000000000000E+0      1.00000000000000E+0
    0.00000000000000E+0      0.00000000000000E+0      0.00000000000000E+0
   BmNSMass                  3     305       1     3.00000000000000E+2
3.00000000000000E+2      0.00000000000000E+0      0.00000000000000E+0
0.00000000000000E+0      0.00000000000000E+0      1.00000000000000E+0
    0.00000000000000E+0      0.00000000000000E+0      0.00000000000000E+0
   BmNSMass                  3     306       1     3.00000000000000E+2
```

```
3.00000000000000E+2      0.00000000000000E+0      0.00000000000000E+0
0.00000000000000E+0      0.00000000000000E+0      1.00000000000000E+0
    0.00000000000000E+0      0.00000000000000E+0      0.00000000000000E+0
   BmNSMass                 3     307       1     3.00000000000000E+2
3.00000000000000E+2      0.00000000000000E+0      0.00000000000000E+0
0.00000000000000E+0      0.00000000000000E+0      1.00000000000000E+0
    0.00000000000000E+0      0.00000000000000E+0      0.00000000000000E+0
   BmNSMass                 3     308       1     3.00000000000000E+2
3.00000000000000E+2      0.00000000000000E+0      0.00000000000000E+0
0.00000000000000E+0      0.00000000000000E+0      1.00000000000000E+0
    0.00000000000000E+0      0.00000000000000E+0      0.00000000000000E+0
   BmNSMass                 3     309       1     3.00000000000000E+2
3.00000000000000E+2      0.00000000000000E+0      0.00000000000000E+0
0.00000000000000E+0      0.00000000000000E+0      1.00000000000000E+0
    0.00000000000000E+0      0.00000000000000E+0      0.00000000000000E+0
   BmNSMass                 3     310       1     3.00000000000000E+2
3.00000000000000E+2      0.00000000000000E+0      0.00000000000000E+0
0.00000000000000E+0      0.00000000000000E+0      1.00000000000000E+0
    0.00000000000000E+0      0.00000000000000E+0      0.00000000000000E+0
   BmNSMass                 3     311       1     3.00000000000000E+2
3.00000000000000E+2      0.00000000000000E+0      0.00000000000000E+0
0.00000000000000E+0      0.00000000000000E+0      1.00000000000000E+0
    0.00000000000000E+0      0.00000000000000E+0      0.00000000000000E+0
   BmNSMass                 3     312       1     3.00000000000000E+2
3.00000000000000E+2      0.00000000000000E+0      0.00000000000000E+0
0.00000000000000E+0      0.00000000000000E+0      1.00000000000000E+0
    0.00000000000000E+0      0.00000000000000E+0      0.00000000000000E+0
   BmNSMass                 3     313       1     3.00000000000000E+2
3.00000000000000E+2      0.00000000000000E+0      0.00000000000000E+0
0.00000000000000E+0      0.00000000000000E+0      1.00000000000000E+0
    0.00000000000000E+0      0.00000000000000E+0      0.00000000000000E+0
   BmNSMass                 3     314       1     3.00000000000000E+2
3.00000000000000E+2      0.00000000000000E+0      0.00000000000000E+0
0.00000000000000E+0      0.00000000000000E+0      1.00000000000000E+0
    0.00000000000000E+0      0.00000000000000E+0      0.00000000000000E+0
   BmNSMass                 3     315       1     3.00000000000000E+2
3.00000000000000E+2      0.00000000000000E+0      0.00000000000000E+0
0.00000000000000E+0      0.00000000000000E+0      1.00000000000000E+0
    0.00000000000000E+0      0.00000000000000E+0      0.00000000000000E+0
   BmNSMass                 3     316       1     3.00000000000000E+2
3.00000000000000E+2      0.00000000000000E+0      0.00000000000000E+0
0.00000000000000E+0      0.00000000000000E+0      1.00000000000000E+0
    0.00000000000000E+0      0.00000000000000E+0      0.00000000000000E+0
   BmNSMass                 3     317       1     3.00000000000000E+2
3.00000000000000E+2      0.00000000000000E+0      0.00000000000000E+0
0.00000000000000E+0      0.00000000000000E+0      1.00000000000000E+0
    0.00000000000000E+0      0.00000000000000E+0      0.00000000000000E+0
   BmNSMass                 3     318       1     3.00000000000000E+2
3.00000000000000E+2      0.00000000000000E+0      0.00000000000000E+0
0.00000000000000E+0      0.00000000000000E+0      1.00000000000000E+0
    0.00000000000000E+0      0.00000000000000E+0      0.00000000000000E+0
   BmNSMass                 3     319       1     3.00000000000000E+2
3.00000000000000E+2      0.00000000000000E+0      0.00000000000000E+0
0.00000000000000E+0      0.00000000000000E+0      1.00000000000000E+0
```

```
    0.00000000000000E+0      0.00000000000000E+0      0.00000000000000E+0
   BmNSMass                  3     320       1     3.00000000000000E+2
3.00000000000000E+2      0.00000000000000E+0      0.00000000000000E+0
0.00000000000000E+0      0.00000000000000E+0      1.00000000000000E+0
    0.00000000000000E+0      0.00000000000000E+0      0.00000000000000E+0
   BmNSMass                  3     321       1     3.00000000000000E+2
3.00000000000000E+2      0.00000000000000E+0      0.00000000000000E+0
0.00000000000000E+0      0.00000000000000E+0      1.00000000000000E+0
    0.00000000000000E+0      0.00000000000000E+0      0.00000000000000E+0
   BmNSMass                  3     322       1     3.00000000000000E+2
3.00000000000000E+2      0.00000000000000E+0      0.00000000000000E+0
0.00000000000000E+0      0.00000000000000E+0      1.00000000000000E+0
    0.00000000000000E+0      0.00000000000000E+0      0.00000000000000E+0
   BmNSMass                  3     323       1     3.00000000000000E+2
3.00000000000000E+2      0.00000000000000E+0      0.00000000000000E+0
0.00000000000000E+0      0.00000000000000E+0      1.00000000000000E+0
    0.00000000000000E+0      0.00000000000000E+0      0.00000000000000E+0
   BmNSMass                  3     324       1     3.00000000000000E+2
3.00000000000000E+2      0.00000000000000E+0      0.00000000000000E+0
0.00000000000000E+0      0.00000000000000E+0      1.00000000000000E+0
    0.00000000000000E+0      0.00000000000000E+0      0.00000000000000E+0
   BmNSMass                  3     325       1     3.00000000000000E+2
3.00000000000000E+2      0.00000000000000E+0      0.00000000000000E+0
0.00000000000000E+0      0.00000000000000E+0      1.00000000000000E+0
    0.00000000000000E+0      0.00000000000000E+0      0.00000000000000E+0
   BmNSMass                  3     326       1     3.00000000000000E+2
3.00000000000000E+2      0.00000000000000E+0      0.00000000000000E+0
0.00000000000000E+0      0.00000000000000E+0      1.00000000000000E+0
    0.00000000000000E+0      0.00000000000000E+0      0.00000000000000E+0
   BmNSMass                  3     327       1     3.00000000000000E+2
3.00000000000000E+2      0.00000000000000E+0      0.00000000000000E+0
0.00000000000000E+0      0.00000000000000E+0      1.00000000000000E+0
    0.00000000000000E+0      0.00000000000000E+0      0.00000000000000E+0
   BmNSMass                  3     328       1     3.00000000000000E+2
3.00000000000000E+2      0.00000000000000E+0      0.00000000000000E+0
0.00000000000000E+0      0.00000000000000E+0      1.00000000000000E+0
    0.00000000000000E+0      0.00000000000000E+0      0.00000000000000E+0
   BmNSMass                  3     329       1     3.00000000000000E+2
3.00000000000000E+2      0.00000000000000E+0      0.00000000000000E+0
0.00000000000000E+0      0.00000000000000E+0      1.00000000000000E+0
    0.00000000000000E+0      0.00000000000000E+0      0.00000000000000E+0
   BmNSMass                  3     330       1     3.00000000000000E+2
3.00000000000000E+2      0.00000000000000E+0      0.00000000000000E+0
0.00000000000000E+0      0.00000000000000E+0      1.00000000000000E+0
    0.00000000000000E+0      0.00000000000000E+0      0.00000000000000E+0
   BmNSMass                  3     331       1     3.00000000000000E+2
3.00000000000000E+2      0.00000000000000E+0      0.00000000000000E+0
0.00000000000000E+0      0.00000000000000E+0      1.00000000000000E+0
    0.00000000000000E+0      0.00000000000000E+0      0.00000000000000E+0
   BmNSMass                  3     332       1     3.00000000000000E+2
3.00000000000000E+2      0.00000000000000E+0      0.00000000000000E+0
0.00000000000000E+0      0.00000000000000E+0      1.00000000000000E+0
    0.00000000000000E+0      0.00000000000000E+0      0.00000000000000E+0
   BmNSMass                  3     333       1     3.00000000000000E+2
```

```
3.00000000000000E+2      0.00000000000000E+0      0.00000000000000E+0
0.00000000000000E+0      0.00000000000000E+0      1.00000000000000E+0
    0.00000000000000E+0      0.00000000000000E+0      0.00000000000000E+0
   BmNSMass                 3     334       1     3.00000000000000E+2
3.00000000000000E+2      0.00000000000000E+0      0.00000000000000E+0
0.00000000000000E+0      0.00000000000000E+0      1.00000000000000E+0
    0.00000000000000E+0      0.00000000000000E+0      0.00000000000000E+0
   BmNSMass                 3     335       1     3.00000000000000E+2
3.00000000000000E+2      0.00000000000000E+0      0.00000000000000E+0
0.00000000000000E+0      0.00000000000000E+0      1.00000000000000E+0
    0.00000000000000E+0      0.00000000000000E+0      0.00000000000000E+0
   BmNSMass                 3     336       1     3.00000000000000E+2
3.00000000000000E+2      0.00000000000000E+0      0.00000000000000E+0
0.00000000000000E+0      0.00000000000000E+0      1.00000000000000E+0
    0.00000000000000E+0      0.00000000000000E+0      0.00000000000000E+0
   BmNSMass                 3     337       1     3.00000000000000E+2
3.00000000000000E+2      0.00000000000000E+0      0.00000000000000E+0
0.00000000000000E+0      0.00000000000000E+0      1.00000000000000E+0
    0.00000000000000E+0      0.00000000000000E+0      0.00000000000000E+0
   BmNSMass                 3     338       1     3.00000000000000E+2
3.00000000000000E+2      0.00000000000000E+0      0.00000000000000E+0
0.00000000000000E+0      0.00000000000000E+0      1.00000000000000E+0
    0.00000000000000E+0      0.00000000000000E+0      0.00000000000000E+0
   BmNSMass                 3     339       1     3.00000000000000E+2
3.00000000000000E+2      0.00000000000000E+0      0.00000000000000E+0
0.00000000000000E+0      0.00000000000000E+0      1.00000000000000E+0
    0.00000000000000E+0      0.00000000000000E+0      0.00000000000000E+0
   BmNSMass                 3     340       1     3.00000000000000E+2
3.00000000000000E+2      0.00000000000000E+0      0.00000000000000E+0
0.00000000000000E+0      0.00000000000000E+0      1.00000000000000E+0
    0.00000000000000E+0      0.00000000000000E+0      0.00000000000000E+0
   BmNSMass                 3     341       1     3.00000000000000E+2
3.00000000000000E+2      0.00000000000000E+0      0.00000000000000E+0
0.00000000000000E+0      0.00000000000000E+0      1.00000000000000E+0
    0.00000000000000E+0      0.00000000000000E+0      0.00000000000000E+0
   BmNSMass                 3     342       1     3.00000000000000E+2
3.00000000000000E+2      0.00000000000000E+0      0.00000000000000E+0
0.00000000000000E+0      0.00000000000000E+0      1.00000000000000E+0
    0.00000000000000E+0      0.00000000000000E+0      0.00000000000000E+0
   BmNSMass                 3     343       1     3.00000000000000E+2
3.00000000000000E+2      0.00000000000000E+0      0.00000000000000E+0
0.00000000000000E+0      0.00000000000000E+0      1.00000000000000E+0
    0.00000000000000E+0      0.00000000000000E+0      0.00000000000000E+0
   BmNSMass                 3     344       1     3.00000000000000E+2
3.00000000000000E+2      0.00000000000000E+0      0.00000000000000E+0
0.00000000000000E+0      0.00000000000000E+0      1.00000000000000E+0
    0.00000000000000E+0      0.00000000000000E+0      0.00000000000000E+0
   BmNSMass                 3     345       1     3.00000000000000E+2
3.00000000000000E+2      0.00000000000000E+0      0.00000000000000E+0
0.00000000000000E+0      0.00000000000000E+0      1.00000000000000E+0
    0.00000000000000E+0      0.00000000000000E+0      0.00000000000000E+0
   BmNSMass                 3     346       1     3.00000000000000E+2
3.00000000000000E+2      0.00000000000000E+0      0.00000000000000E+0
0.00000000000000E+0      0.00000000000000E+0      1.00000000000000E+0
```

```
    0.00000000000000E+0      0.00000000000000E+0      0.00000000000000E+0
   BmNSMass                  3     347       1     3.00000000000000E+2
3.00000000000000E+2      0.00000000000000E+0      0.00000000000000E+0
0.00000000000000E+0      0.00000000000000E+0      1.00000000000000E+0
    0.00000000000000E+0      0.00000000000000E+0      0.00000000000000E+0
   BmNSMass                  3     348       1     3.00000000000000E+2
3.00000000000000E+2      0.00000000000000E+0      0.00000000000000E+0
0.00000000000000E+0      0.00000000000000E+0      1.00000000000000E+0
    0.00000000000000E+0      0.00000000000000E+0      0.00000000000000E+0
   BmNSMass                  3     349       1     3.00000000000000E+2
3.00000000000000E+2      0.00000000000000E+0      0.00000000000000E+0
0.00000000000000E+0      0.00000000000000E+0      1.00000000000000E+0
    0.00000000000000E+0      0.00000000000000E+0      0.00000000000000E+0
   BmNSMass                  3     350       1     3.00000000000000E+2
3.00000000000000E+2      0.00000000000000E+0      0.00000000000000E+0
0.00000000000000E+0      0.00000000000000E+0      1.00000000000000E+0
    0.00000000000000E+0      0.00000000000000E+0      0.00000000000000E+0
   BmNSMass                  3     351       1     3.00000000000000E+2
3.00000000000000E+2      0.00000000000000E+0      0.00000000000000E+0
0.00000000000000E+0      0.00000000000000E+0      1.00000000000000E+0
    0.00000000000000E+0      0.00000000000000E+0      0.00000000000000E+0
   BmNSMass                  3     352       1     3.00000000000000E+2
3.00000000000000E+2      0.00000000000000E+0      0.00000000000000E+0
0.00000000000000E+0      0.00000000000000E+0      1.00000000000000E+0
    0.00000000000000E+0      0.00000000000000E+0      0.00000000000000E+0
   BmNSMass                  3     353       1     3.00000000000000E+2
3.00000000000000E+2      0.00000000000000E+0      0.00000000000000E+0
0.00000000000000E+0      0.00000000000000E+0      1.00000000000000E+0
    0.00000000000000E+0      0.00000000000000E+0      0.00000000000000E+0
   BmNSMass                  3     354       1     3.00000000000000E+2
3.00000000000000E+2      0.00000000000000E+0      0.00000000000000E+0
0.00000000000000E+0      0.00000000000000E+0      1.00000000000000E+0
    0.00000000000000E+0      0.00000000000000E+0      0.00000000000000E+0
   BmNSMass                  3     355       1     3.00000000000000E+2
3.00000000000000E+2      0.00000000000000E+0      0.00000000000000E+0
0.00000000000000E+0      0.00000000000000E+0      1.00000000000000E+0
    0.00000000000000E+0      0.00000000000000E+0      0.00000000000000E+0
   BmNSMass                  3     356       1     3.00000000000000E+2
3.00000000000000E+2      0.00000000000000E+0      0.00000000000000E+0
0.00000000000000E+0      0.00000000000000E+0      1.00000000000000E+0
    0.00000000000000E+0      0.00000000000000E+0      0.00000000000000E+0
   BmNSMass                  3     357       1     3.00000000000000E+2
3.00000000000000E+2      0.00000000000000E+0      0.00000000000000E+0
0.00000000000000E+0      0.00000000000000E+0      1.00000000000000E+0
    0.00000000000000E+0      0.00000000000000E+0      0.00000000000000E+0
   BmNSMass                  3     358       1     3.00000000000000E+2
3.00000000000000E+2      0.00000000000000E+0      0.00000000000000E+0
0.00000000000000E+0      0.00000000000000E+0      1.00000000000000E+0
    0.00000000000000E+0      0.00000000000000E+0      0.00000000000000E+0
   BmNSMass                  3     359       1     3.00000000000000E+2
3.00000000000000E+2      0.00000000000000E+0      0.00000000000000E+0
0.00000000000000E+0      0.00000000000000E+0      1.00000000000000E+0
    0.00000000000000E+0      0.00000000000000E+0      0.00000000000000E+0
   BmNSMass                  3     360       1     3.00000000000000E+2
```

```
3.00000000000000E+2      0.00000000000000E+0      0.00000000000000E+0
0.00000000000000E+0      0.00000000000000E+0      1.00000000000000E+0
    0.00000000000000E+0      0.00000000000000E+0      0.00000000000000E+0
   BmNSMass                 3     361       1     3.00000000000000E+2
3.00000000000000E+2      0.00000000000000E+0      0.00000000000000E+0
0.00000000000000E+0      0.00000000000000E+0      1.00000000000000E+0
    0.00000000000000E+0      0.00000000000000E+0      0.00000000000000E+0
   BmNSMass                 3     362       1     3.00000000000000E+2
3.00000000000000E+2      0.00000000000000E+0      0.00000000000000E+0
0.00000000000000E+0      0.00000000000000E+0      1.00000000000000E+0
    0.00000000000000E+0      0.00000000000000E+0      0.00000000000000E+0
   BmNSMass                 3     363       1     3.00000000000000E+2
3.00000000000000E+2      0.00000000000000E+0      0.00000000000000E+0
0.00000000000000E+0      0.00000000000000E+0      1.00000000000000E+0
    0.00000000000000E+0      0.00000000000000E+0      0.00000000000000E+0
   BmNSMass                 3     364       1     3.00000000000000E+2
3.00000000000000E+2      0.00000000000000E+0      0.00000000000000E+0
0.00000000000000E+0      0.00000000000000E+0      1.00000000000000E+0
    0.00000000000000E+0      0.00000000000000E+0      0.00000000000000E+0
   BmNSMass                 3     365       1     3.00000000000000E+2
3.00000000000000E+2      0.00000000000000E+0      0.00000000000000E+0
0.00000000000000E+0      0.00000000000000E+0      1.00000000000000E+0
    0.00000000000000E+0      0.00000000000000E+0      0.00000000000000E+0
   BmNSMass                 3     366       1     3.00000000000000E+2
3.00000000000000E+2      0.00000000000000E+0      0.00000000000000E+0
0.00000000000000E+0      0.00000000000000E+0      1.00000000000000E+0
    0.00000000000000E+0      0.00000000000000E+0      0.00000000000000E+0
   BmNSMass                 3     367       1     3.00000000000000E+2
3.00000000000000E+2      0.00000000000000E+0      0.00000000000000E+0
0.00000000000000E+0      0.00000000000000E+0      1.00000000000000E+0
    0.00000000000000E+0      0.00000000000000E+0      0.00000000000000E+0
   BmNSMass                 3     368       1     3.00000000000000E+2
3.00000000000000E+2      0.00000000000000E+0      0.00000000000000E+0
0.00000000000000E+0      0.00000000000000E+0      1.00000000000000E+0
    0.00000000000000E+0      0.00000000000000E+0      0.00000000000000E+0
   BmNSMass                 3     369       1     3.00000000000000E+2
3.00000000000000E+2      0.00000000000000E+0      0.00000000000000E+0
0.00000000000000E+0      0.00000000000000E+0      1.00000000000000E+0
    0.00000000000000E+0      0.00000000000000E+0      0.00000000000000E+0
   BmNSMass                 3     370       1     3.00000000000000E+2
3.00000000000000E+2      0.00000000000000E+0      0.00000000000000E+0
0.00000000000000E+0      0.00000000000000E+0      1.00000000000000E+0
    0.00000000000000E+0      0.00000000000000E+0      0.00000000000000E+0
   BmNSMass                 3     371       1     3.00000000000000E+2
3.00000000000000E+2      0.00000000000000E+0      0.00000000000000E+0
0.00000000000000E+0      0.00000000000000E+0      1.00000000000000E+0
    0.00000000000000E+0      0.00000000000000E+0      0.00000000000000E+0
   BmNSMass                 3     372       1     3.00000000000000E+2
3.00000000000000E+2      0.00000000000000E+0      0.00000000000000E+0
0.00000000000000E+0      0.00000000000000E+0      1.00000000000000E+0
    0.00000000000000E+0      0.00000000000000E+0      0.00000000000000E+0
   BmNSMass                 3     373       1     3.00000000000000E+2
3.00000000000000E+2      0.00000000000000E+0      0.00000000000000E+0
0.00000000000000E+0      0.00000000000000E+0      1.00000000000000E+0
```

```
    0.00000000000000E+0      0.00000000000000E+0      0.00000000000000E+0
   BmNSMass                  3     374       1     3.00000000000000E+2
3.00000000000000E+2      0.00000000000000E+0      0.00000000000000E+0
0.00000000000000E+0      0.00000000000000E+0      1.00000000000000E+0
    0.00000000000000E+0      0.00000000000000E+0      0.00000000000000E+0
   BmNSMass                  3     375       1     3.00000000000000E+2
3.00000000000000E+2      0.00000000000000E+0      0.00000000000000E+0
0.00000000000000E+0      0.00000000000000E+0      1.00000000000000E+0
    0.00000000000000E+0      0.00000000000000E+0      0.00000000000000E+0
   BmNSMass                  3     376       1     3.00000000000000E+2
3.00000000000000E+2      0.00000000000000E+0      0.00000000000000E+0
0.00000000000000E+0      0.00000000000000E+0      1.00000000000000E+0
    0.00000000000000E+0      0.00000000000000E+0      0.00000000000000E+0
   BmNSMass                  3     377       1     3.00000000000000E+2
3.00000000000000E+2      0.00000000000000E+0      0.00000000000000E+0
0.00000000000000E+0      0.00000000000000E+0      1.00000000000000E+0
    0.00000000000000E+0      0.00000000000000E+0      0.00000000000000E+0
   BmNSMass                  3     378       1     3.00000000000000E+2
3.00000000000000E+2      0.00000000000000E+0      0.00000000000000E+0
0.00000000000000E+0      0.00000000000000E+0      1.00000000000000E+0
    0.00000000000000E+0      0.00000000000000E+0      0.00000000000000E+0
   BmNSMass                  3     379       1     3.00000000000000E+2
3.00000000000000E+2      0.00000000000000E+0      0.00000000000000E+0
0.00000000000000E+0      0.00000000000000E+0      1.00000000000000E+0
    0.00000000000000E+0      0.00000000000000E+0      0.00000000000000E+0
   BmNSMass                  3     380       1     3.00000000000000E+2
3.00000000000000E+2      0.00000000000000E+0      0.00000000000000E+0
0.00000000000000E+0      0.00000000000000E+0      1.00000000000000E+0
    0.00000000000000E+0      0.00000000000000E+0      0.00000000000000E+0
   BmNSMass                  3     381       1     3.00000000000000E+2
3.00000000000000E+2      0.00000000000000E+0      0.00000000000000E+0
0.00000000000000E+0      0.00000000000000E+0      1.00000000000000E+0
    0.00000000000000E+0      0.00000000000000E+0      0.00000000000000E+0
   BmNSMass                  3     382       1     3.00000000000000E+2
3.00000000000000E+2      0.00000000000000E+0      0.00000000000000E+0
0.00000000000000E+0      0.00000000000000E+0      1.00000000000000E+0
    0.00000000000000E+0      0.00000000000000E+0      0.00000000000000E+0
   BmNSMass                  3     383       1     3.00000000000000E+2
3.00000000000000E+2      0.00000000000000E+0      0.00000000000000E+0
0.00000000000000E+0      0.00000000000000E+0      1.00000000000000E+0
    0.00000000000000E+0      0.00000000000000E+0      0.00000000000000E+0
   BmNSMass                  3     384       1     3.00000000000000E+2
3.00000000000000E+2      0.00000000000000E+0      0.00000000000000E+0
0.00000000000000E+0      0.00000000000000E+0      1.00000000000000E+0
    0.00000000000000E+0      0.00000000000000E+0      0.00000000000000E+0
   BmNSMass                  3     385       1     3.00000000000000E+2
3.00000000000000E+2      0.00000000000000E+0      0.00000000000000E+0
0.00000000000000E+0      0.00000000000000E+0      1.00000000000000E+0
    0.00000000000000E+0      0.00000000000000E+0      0.00000000000000E+0
   BmNSMass                  3     386       1     3.00000000000000E+2
3.00000000000000E+2      0.00000000000000E+0      0.00000000000000E+0
0.00000000000000E+0      0.00000000000000E+0      1.00000000000000E+0
    0.00000000000000E+0      0.00000000000000E+0      0.00000000000000E+0
   BmNSMass                  3     387       1     3.00000000000000E+2
```

```
3.00000000000000E+2      0.00000000000000E+0      0.00000000000000E+0
0.00000000000000E+0      0.00000000000000E+0      1.00000000000000E+0
    0.00000000000000E+0      0.00000000000000E+0      0.00000000000000E+0
   BmNSMass                 3     388       1     3.00000000000000E+2
3.00000000000000E+2      0.00000000000000E+0      0.00000000000000E+0
0.00000000000000E+0      0.00000000000000E+0      1.00000000000000E+0
    0.00000000000000E+0      0.00000000000000E+0      0.00000000000000E+0
   BmNSMass                 3     389       1     3.00000000000000E+2
3.00000000000000E+2      0.00000000000000E+0      0.00000000000000E+0
0.00000000000000E+0      0.00000000000000E+0      1.00000000000000E+0
    0.00000000000000E+0      0.00000000000000E+0      0.00000000000000E+0
   BmNSMass                 3     390       1     3.00000000000000E+2
3.00000000000000E+2      0.00000000000000E+0      0.00000000000000E+0
0.00000000000000E+0      0.00000000000000E+0      1.00000000000000E+0
    0.00000000000000E+0      0.00000000000000E+0      0.00000000000000E+0
   BmNSMass                 3     391       1     3.00000000000000E+2
3.00000000000000E+2      0.00000000000000E+0      0.00000000000000E+0
0.00000000000000E+0      0.00000000000000E+0      1.00000000000000E+0
    0.00000000000000E+0      0.00000000000000E+0      0.00000000000000E+0
   BmNSMass                 3     392       1     3.00000000000000E+2
3.00000000000000E+2      0.00000000000000E+0      0.00000000000000E+0
0.00000000000000E+0      0.00000000000000E+0      1.00000000000000E+0
    0.00000000000000E+0      0.00000000000000E+0      0.00000000000000E+0
   BmNSMass                 3     393       1     3.00000000000000E+2
3.00000000000000E+2      0.00000000000000E+0      0.00000000000000E+0
0.00000000000000E+0      0.00000000000000E+0      1.00000000000000E+0
    0.00000000000000E+0      0.00000000000000E+0      0.00000000000000E+0
   BmNSMass                 3     394       1     3.00000000000000E+2
3.00000000000000E+2      0.00000000000000E+0      0.00000000000000E+0
0.00000000000000E+0      0.00000000000000E+0      1.00000000000000E+0
    0.00000000000000E+0      0.00000000000000E+0      0.00000000000000E+0
   BmNSMass                 3     395       1     3.00000000000000E+2
3.00000000000000E+2      0.00000000000000E+0      0.00000000000000E+0
0.00000000000000E+0      0.00000000000000E+0      1.00000000000000E+0
    0.00000000000000E+0      0.00000000000000E+0      0.00000000000000E+0
   BmNSMass                 3     396       1     3.00000000000000E+2
3.00000000000000E+2      0.00000000000000E+0      0.00000000000000E+0
0.00000000000000E+0      0.00000000000000E+0      1.00000000000000E+0
    0.00000000000000E+0      0.00000000000000E+0      0.00000000000000E+0
   BmNSMass                 3     397       1     3.00000000000000E+2
3.00000000000000E+2      0.00000000000000E+0      0.00000000000000E+0
0.00000000000000E+0      0.00000000000000E+0      1.00000000000000E+0
    0.00000000000000E+0      0.00000000000000E+0      0.00000000000000E+0
   BmNSMass                 3     398       1     3.00000000000000E+2
3.00000000000000E+2      0.00000000000000E+0      0.00000000000000E+0
0.00000000000000E+0      0.00000000000000E+0      1.00000000000000E+0
    0.00000000000000E+0      0.00000000000000E+0      0.00000000000000E+0
   BmNSMass                 3     399       1     3.00000000000000E+2
3.00000000000000E+2      0.00000000000000E+0      0.00000000000000E+0
0.00000000000000E+0      0.00000000000000E+0      1.00000000000000E+0
    0.00000000000000E+0      0.00000000000000E+0      0.00000000000000E+0
   BmNSMass                 3     400       1     3.00000000000000E+2
3.00000000000000E+2      0.00000000000000E+0      0.00000000000000E+0
0.00000000000000E+0      0.00000000000000E+0      1.00000000000000E+0
```

```
    0.00000000000000E+0      0.00000000000000E+0      0.00000000000000E+0
   BmNSMass                  3     401       1     3.00000000000000E+2
3.00000000000000E+2      0.00000000000000E+0      0.00000000000000E+0
0.00000000000000E+0      0.00000000000000E+0      1.00000000000000E+0
    0.00000000000000E+0      0.00000000000000E+0      0.00000000000000E+0
   BmNSMass                  3     402       1     3.00000000000000E+2
3.00000000000000E+2      0.00000000000000E+0      0.00000000000000E+0
0.00000000000000E+0      0.00000000000000E+0      1.00000000000000E+0
    0.00000000000000E+0      0.00000000000000E+0      0.00000000000000E+0
   BmNSMass                  3     403       1     3.00000000000000E+2
3.00000000000000E+2      0.00000000000000E+0      0.00000000000000E+0
0.00000000000000E+0      0.00000000000000E+0      1.00000000000000E+0
    0.00000000000000E+0      0.00000000000000E+0      0.00000000000000E+0
   BmNSMass                  3     404       1     3.00000000000000E+2
3.00000000000000E+2      0.00000000000000E+0      0.00000000000000E+0
0.00000000000000E+0      0.00000000000000E+0      1.00000000000000E+0
    0.00000000000000E+0      0.00000000000000E+0      0.00000000000000E+0
   BmNSMass                  3     405       1     3.00000000000000E+2
3.00000000000000E+2      0.00000000000000E+0      0.00000000000000E+0
0.00000000000000E+0      0.00000000000000E+0      1.00000000000000E+0
    0.00000000000000E+0      0.00000000000000E+0      0.00000000000000E+0
   BmNSMass                  3     406       1     3.00000000000000E+2
3.00000000000000E+2      0.00000000000000E+0      0.00000000000000E+0
0.00000000000000E+0      0.00000000000000E+0      1.00000000000000E+0
    0.00000000000000E+0      0.00000000000000E+0      0.00000000000000E+0
   BmNSMass                  3     407       1     3.00000000000000E+2
3.00000000000000E+2      0.00000000000000E+0      0.00000000000000E+0
0.00000000000000E+0      0.00000000000000E+0      1.00000000000000E+0
    0.00000000000000E+0      0.00000000000000E+0      0.00000000000000E+0
   BmNSMass                  3     408       1     3.00000000000000E+2
3.00000000000000E+2      0.00000000000000E+0      0.00000000000000E+0
0.00000000000000E+0      0.00000000000000E+0      1.00000000000000E+0
    0.00000000000000E+0      0.00000000000000E+0      0.00000000000000E+0
   BmNSMass                  3     409       1     3.00000000000000E+2
3.00000000000000E+2      0.00000000000000E+0      0.00000000000000E+0
0.00000000000000E+0      0.00000000000000E+0      1.00000000000000E+0
    0.00000000000000E+0      0.00000000000000E+0      0.00000000000000E+0
   BmNSMass                  3     410       1     3.00000000000000E+2
3.00000000000000E+2      0.00000000000000E+0      0.00000000000000E+0
0.00000000000000E+0      0.00000000000000E+0      1.00000000000000E+0
    0.00000000000000E+0      0.00000000000000E+0      0.00000000000000E+0
   BmNSMass                  3     411       1     3.00000000000000E+2
3.00000000000000E+2      0.00000000000000E+0      0.00000000000000E+0
0.00000000000000E+0      0.00000000000000E+0      1.00000000000000E+0
    0.00000000000000E+0      0.00000000000000E+0      0.00000000000000E+0
   BmNSMass                  3     412       1     3.00000000000000E+2
3.00000000000000E+2      0.00000000000000E+0      0.00000000000000E+0
0.00000000000000E+0      0.00000000000000E+0      1.00000000000000E+0
    0.00000000000000E+0      0.00000000000000E+0      0.00000000000000E+0
   BmNSMass                  3     413       1     3.00000000000000E+2
3.00000000000000E+2      0.00000000000000E+0      0.00000000000000E+0
0.00000000000000E+0      0.00000000000000E+0      1.00000000000000E+0
    0.00000000000000E+0      0.00000000000000E+0      0.00000000000000E+0
   BmNSMass                  3     414       1     3.00000000000000E+2
```

```
3.00000000000000E+2      0.00000000000000E+0      0.00000000000000E+0
0.00000000000000E+0      0.00000000000000E+0      1.00000000000000E+0
    0.00000000000000E+0      0.00000000000000E+0      0.00000000000000E+0
   BmNSMass                 3     415       1     3.00000000000000E+2
3.00000000000000E+2      0.00000000000000E+0      0.00000000000000E+0
0.00000000000000E+0      0.00000000000000E+0      1.00000000000000E+0
    0.00000000000000E+0      0.00000000000000E+0      0.00000000000000E+0
   BmNSMass                 3     416       1     3.00000000000000E+2
3.00000000000000E+2      0.00000000000000E+0      0.00000000000000E+0
0.00000000000000E+0      0.00000000000000E+0      1.00000000000000E+0
    0.00000000000000E+0      0.00000000000000E+0      0.00000000000000E+0
   BmNSMass                 3     417       1     3.00000000000000E+2
3.00000000000000E+2      0.00000000000000E+0      0.00000000000000E+0
0.00000000000000E+0      0.00000000000000E+0      1.00000000000000E+0
    0.00000000000000E+0      0.00000000000000E+0      0.00000000000000E+0
   BmNSMass                 3     418       1     3.00000000000000E+2
3.00000000000000E+2      0.00000000000000E+0      0.00000000000000E+0
0.00000000000000E+0      0.00000000000000E+0      1.00000000000000E+0
    0.00000000000000E+0      0.00000000000000E+0      0.00000000000000E+0
   BmNSMass                 3     419       1     3.00000000000000E+2
3.00000000000000E+2      0.00000000000000E+0      0.00000000000000E+0
0.00000000000000E+0      0.00000000000000E+0      1.00000000000000E+0
    0.00000000000000E+0      0.00000000000000E+0      0.00000000000000E+0
   BmNSMass                 3     420       1     3.00000000000000E+2
3.00000000000000E+2      0.00000000000000E+0      0.00000000000000E+0
0.00000000000000E+0      0.00000000000000E+0      1.00000000000000E+0
    0.00000000000000E+0      0.00000000000000E+0      0.00000000000000E+0
   BmNSMass                 3     421       1     3.00000000000000E+2
3.00000000000000E+2      0.00000000000000E+0      0.00000000000000E+0
0.00000000000000E+0      0.00000000000000E+0      1.00000000000000E+0
    0.00000000000000E+0      0.00000000000000E+0      0.00000000000000E+0
   BmNSMass                 3     422       1     3.00000000000000E+2
3.00000000000000E+2      0.00000000000000E+0      0.00000000000000E+0
0.00000000000000E+0      0.00000000000000E+0      1.00000000000000E+0
    0.00000000000000E+0      0.00000000000000E+0      0.00000000000000E+0
   BmNSMass                 3     423       1     3.00000000000000E+2
3.00000000000000E+2      0.00000000000000E+0      0.00000000000000E+0
0.00000000000000E+0      0.00000000000000E+0      1.00000000000000E+0
    0.00000000000000E+0      0.00000000000000E+0      0.00000000000000E+0
   BmNSMass                 3     424       1     3.00000000000000E+2
3.00000000000000E+2      0.00000000000000E+0      0.00000000000000E+0
0.00000000000000E+0      0.00000000000000E+0      1.00000000000000E+0
    0.00000000000000E+0      0.00000000000000E+0      0.00000000000000E+0
   BmNSMass                 3     425       1     3.00000000000000E+2
3.00000000000000E+2      0.00000000000000E+0      0.00000000000000E+0
0.00000000000000E+0      0.00000000000000E+0      1.00000000000000E+0
    0.00000000000000E+0      0.00000000000000E+0      0.00000000000000E+0
   BmNSMass                 3     426       1     3.00000000000000E+2
3.00000000000000E+2      0.00000000000000E+0      0.00000000000000E+0
0.00000000000000E+0      0.00000000000000E+0      1.00000000000000E+0
    0.00000000000000E+0      0.00000000000000E+0      0.00000000000000E+0
   BmNSMass                 3     427       1     3.00000000000000E+2
3.00000000000000E+2      0.00000000000000E+0      0.00000000000000E+0
0.00000000000000E+0      0.00000000000000E+0      1.00000000000000E+0
```

```
    0.00000000000000E+0      0.00000000000000E+0      0.00000000000000E+0
   BmNSMass                  3     428       1     3.00000000000000E+2
3.00000000000000E+2      0.00000000000000E+0      0.00000000000000E+0
0.00000000000000E+0      0.00000000000000E+0      1.00000000000000E+0
    0.00000000000000E+0      0.00000000000000E+0      0.00000000000000E+0
   BmNSMass                  3     429       1     3.00000000000000E+2
3.00000000000000E+2      0.00000000000000E+0      0.00000000000000E+0
0.00000000000000E+0      0.00000000000000E+0      1.00000000000000E+0
    0.00000000000000E+0      0.00000000000000E+0      0.00000000000000E+0
   BmNSMass                  3     430       1     3.00000000000000E+2
3.00000000000000E+2      0.00000000000000E+0      0.00000000000000E+0
0.00000000000000E+0      0.00000000000000E+0      1.00000000000000E+0
    0.00000000000000E+0      0.00000000000000E+0      0.00000000000000E+0
   BmNSMass                  3     431       1     3.00000000000000E+2
3.00000000000000E+2      0.00000000000000E+0      0.00000000000000E+0
0.00000000000000E+0      0.00000000000000E+0      1.00000000000000E+0
    0.00000000000000E+0      0.00000000000000E+0      0.00000000000000E+0
   BmNSMass                  3     432       1     3.00000000000000E+2
3.00000000000000E+2      0.00000000000000E+0      0.00000000000000E+0
0.00000000000000E+0      0.00000000000000E+0      1.00000000000000E+0
    0.00000000000000E+0      0.00000000000000E+0      0.00000000000000E+0
   BmNSMass                  3     433       1     3.00000000000000E+2
3.00000000000000E+2      0.00000000000000E+0      0.00000000000000E+0
0.00000000000000E+0      0.00000000000000E+0      1.00000000000000E+0
    0.00000000000000E+0      0.00000000000000E+0      0.00000000000000E+0
   BmNSMass                  3     503       1     7.00000000000000E+2
7.00000000000000E+2      0.00000000000000E+0      0.00000000000000E+0
0.00000000000000E+0      0.00000000000000E+0      1.00000000000000E+0
    0.00000000000000E+0      0.00000000000000E+0      0.00000000000000E+0
   BmNSMass                  3     504       1     7.00000000000000E+2
7.00000000000000E+2      0.00000000000000E+0      0.00000000000000E+0
0.00000000000000E+0      0.00000000000000E+0      1.00000000000000E+0
    0.00000000000000E+0      0.00000000000000E+0      0.00000000000000E+0
   BmNSMass                  3     505       1     7.00000000000000E+2
7.00000000000000E+2      0.00000000000000E+0      0.00000000000000E+0
0.00000000000000E+0      0.00000000000000E+0      1.00000000000000E+0
    0.00000000000000E+0      0.00000000000000E+0      0.00000000000000E+0
   BmNSMass                  3     506       1     7.00000000000000E+2
7.00000000000000E+2      0.00000000000000E+0      0.00000000000000E+0
0.00000000000000E+0      0.00000000000000E+0      1.00000000000000E+0
    0.00000000000000E+0      0.00000000000000E+0      0.00000000000000E+0
   BmNSMass                  3     507       1     7.00000000000000E+2
7.00000000000000E+2      0.00000000000000E+0      0.00000000000000E+0
0.00000000000000E+0      0.00000000000000E+0      1.00000000000000E+0
    0.00000000000000E+0      0.00000000000000E+0      0.00000000000000E+0
   BmNSMass                  3     508       1     7.00000000000000E+2
7.00000000000000E+2      0.00000000000000E+0      0.00000000000000E+0
0.00000000000000E+0      0.00000000000000E+0      1.00000000000000E+0
    0.00000000000000E+0      0.00000000000000E+0      0.00000000000000E+0
   BmNSMass                  3     509       1     7.00000000000000E+2
7.00000000000000E+2      0.00000000000000E+0      0.00000000000000E+0
0.00000000000000E+0      0.00000000000000E+0      1.00000000000000E+0
    0.00000000000000E+0      0.00000000000000E+0      0.00000000000000E+0
   BmNSMass                  3     510       1     7.00000000000000E+2
```

```
7.00000000000000E+2      0.00000000000000E+0      0.00000000000000E+0
0.00000000000000E+0      0.00000000000000E+0      1.00000000000000E+0
    0.00000000000000E+0      0.00000000000000E+0      0.00000000000000E+0
   BmNSMass                 3     511       1     7.00000000000000E+2
7.00000000000000E+2      0.00000000000000E+0      0.00000000000000E+0
0.00000000000000E+0      0.00000000000000E+0      1.00000000000000E+0
    0.00000000000000E+0      0.00000000000000E+0      0.00000000000000E+0
   BmNSMass                 3     512       1     7.00000000000000E+2
7.00000000000000E+2      0.00000000000000E+0      0.00000000000000E+0
0.00000000000000E+0      0.00000000000000E+0      1.00000000000000E+0
    0.00000000000000E+0      0.00000000000000E+0      0.00000000000000E+0
   BmNSMass                 3     513       1     7.00000000000000E+2
7.00000000000000E+2      0.00000000000000E+0      0.00000000000000E+0
0.00000000000000E+0      0.00000000000000E+0      1.00000000000000E+0
    0.00000000000000E+0      0.00000000000000E+0      0.00000000000000E+0
   BmNSMass                 3     514       1     7.00000000000000E+2
7.00000000000000E+2      0.00000000000000E+0      0.00000000000000E+0
0.00000000000000E+0      0.00000000000000E+0      1.00000000000000E+0
    0.00000000000000E+0      0.00000000000000E+0      0.00000000000000E+0
   BmNSMass                 3     515       1     7.00000000000000E+2
7.00000000000000E+2      0.00000000000000E+0      0.00000000000000E+0
0.00000000000000E+0      0.00000000000000E+0      1.00000000000000E+0
    0.00000000000000E+0      0.00000000000000E+0      0.00000000000000E+0
   BmNSMass                 3     516       1     7.00000000000000E+2
7.00000000000000E+2      0.00000000000000E+0      0.00000000000000E+0
0.00000000000000E+0      0.00000000000000E+0      1.00000000000000E+0
    0.00000000000000E+0      0.00000000000000E+0      0.00000000000000E+0
   BmNSMass                 3     517       1     7.00000000000000E+2
7.00000000000000E+2      0.00000000000000E+0      0.00000000000000E+0
0.00000000000000E+0      0.00000000000000E+0      1.00000000000000E+0
    0.00000000000000E+0      0.00000000000000E+0      0.00000000000000E+0
   BmNSMass                 3     518       1     7.00000000000000E+2
7.00000000000000E+2      0.00000000000000E+0      0.00000000000000E+0
0.00000000000000E+0      0.00000000000000E+0      1.00000000000000E+0
    0.00000000000000E+0      0.00000000000000E+0      0.00000000000000E+0
   BmNSMass                 3     519       1     7.00000000000000E+2
7.00000000000000E+2      0.00000000000000E+0      0.00000000000000E+0
0.00000000000000E+0      0.00000000000000E+0      1.00000000000000E+0
    0.00000000000000E+0      0.00000000000000E+0      0.00000000000000E+0
   BmNSMass                 3     520       1     7.00000000000000E+2
7.00000000000000E+2      0.00000000000000E+0      0.00000000000000E+0
0.00000000000000E+0      0.00000000000000E+0      1.00000000000000E+0
    0.00000000000000E+0      0.00000000000000E+0      0.00000000000000E+0
   BmNSMass                 3     521       1     7.00000000000000E+2
7.00000000000000E+2      0.00000000000000E+0      0.00000000000000E+0
0.00000000000000E+0      0.00000000000000E+0      1.00000000000000E+0
    0.00000000000000E+0      0.00000000000000E+0      0.00000000000000E+0
   BmNSMass                 3     522       1     7.00000000000000E+2
7.00000000000000E+2      0.00000000000000E+0      0.00000000000000E+0
0.00000000000000E+0      0.00000000000000E+0      1.00000000000000E+0
    0.00000000000000E+0      0.00000000000000E+0      0.00000000000000E+0
   BmNSMass                 3     523       1     7.00000000000000E+2
7.00000000000000E+2      0.00000000000000E+0      0.00000000000000E+0
0.00000000000000E+0      0.00000000000000E+0      1.00000000000000E+0
```

```
    0.00000000000000E+0      0.00000000000000E+0      0.00000000000000E+0
   BmNSMass                  3     524       1     7.00000000000000E+2
7.00000000000000E+2      0.00000000000000E+0      0.00000000000000E+0
0.00000000000000E+0      0.00000000000000E+0      1.00000000000000E+0
    0.00000000000000E+0      0.00000000000000E+0      0.00000000000000E+0
   BmNSMass                  3     525       1     7.00000000000000E+2
7.00000000000000E+2      0.00000000000000E+0      0.00000000000000E+0
0.00000000000000E+0      0.00000000000000E+0      1.00000000000000E+0
    0.00000000000000E+0      0.00000000000000E+0      0.00000000000000E+0
   BmNSMass                  3     526       1     7.00000000000000E+2
7.00000000000000E+2      0.00000000000000E+0      0.00000000000000E+0
0.00000000000000E+0      0.00000000000000E+0      1.00000000000000E+0
    0.00000000000000E+0      0.00000000000000E+0      0.00000000000000E+0
   BmNSMass                  3     527       1     7.00000000000000E+2
7.00000000000000E+2      0.00000000000000E+0      0.00000000000000E+0
0.00000000000000E+0      0.00000000000000E+0      1.00000000000000E+0
    0.00000000000000E+0      0.00000000000000E+0      0.00000000000000E+0
   BmNSMass                  3     528       1     7.00000000000000E+2
7.00000000000000E+2      0.00000000000000E+0      0.00000000000000E+0
0.00000000000000E+0      0.00000000000000E+0      1.00000000000000E+0
    0.00000000000000E+0      0.00000000000000E+0      0.00000000000000E+0
   BmNSMass                  3     529       1     7.00000000000000E+2
7.00000000000000E+2      0.00000000000000E+0      0.00000000000000E+0
0.00000000000000E+0      0.00000000000000E+0      1.00000000000000E+0
    0.00000000000000E+0      0.00000000000000E+0      0.00000000000000E+0
   BmNSMass                  3     530       1     7.00000000000000E+2
7.00000000000000E+2      0.00000000000000E+0      0.00000000000000E+0
0.00000000000000E+0      0.00000000000000E+0      1.00000000000000E+0
    0.00000000000000E+0      0.00000000000000E+0      0.00000000000000E+0
   BmNSMass                  3     531       1     7.00000000000000E+2
7.00000000000000E+2      0.00000000000000E+0      0.00000000000000E+0
0.00000000000000E+0      0.00000000000000E+0      1.00000000000000E+0
    0.00000000000000E+0      0.00000000000000E+0      0.00000000000000E+0
   BmNSMass                  3     532       1     7.00000000000000E+2
7.00000000000000E+2      0.00000000000000E+0      0.00000000000000E+0
0.00000000000000E+0      0.00000000000000E+0      1.00000000000000E+0
    0.00000000000000E+0      0.00000000000000E+0      0.00000000000000E+0
   BmNSMass                  3     533       1     7.00000000000000E+2
7.00000000000000E+2      0.00000000000000E+0      0.00000000000000E+0
0.00000000000000E+0      0.00000000000000E+0      1.00000000000000E+0
    0.00000000000000E+0      0.00000000000000E+0      0.00000000000000E+0
   BmNSMass                  3     534       1     7.00000000000000E+2
7.00000000000000E+2      0.00000000000000E+0      0.00000000000000E+0
0.00000000000000E+0      0.00000000000000E+0      1.00000000000000E+0
    0.00000000000000E+0      0.00000000000000E+0      0.00000000000000E+0
   BmNSMass                  3     535       1     7.00000000000000E+2
7.00000000000000E+2      0.00000000000000E+0      0.00000000000000E+0
0.00000000000000E+0      0.00000000000000E+0      1.00000000000000E+0
    0.00000000000000E+0      0.00000000000000E+0      0.00000000000000E+0
   BmNSMass                  3     536       1     7.00000000000000E+2
7.00000000000000E+2      0.00000000000000E+0      0.00000000000000E+0
0.00000000000000E+0      0.00000000000000E+0      1.00000000000000E+0
    0.00000000000000E+0      0.00000000000000E+0      0.00000000000000E+0
   BmNSMass                  3     537       1     7.00000000000000E+2
```

```
7.00000000000000E+2      0.00000000000000E+0      0.00000000000000E+0
0.00000000000000E+0      0.00000000000000E+0      1.00000000000000E+0
    0.00000000000000E+0      0.00000000000000E+0      0.00000000000000E+0
   BmNSMass                 3     538       1     7.00000000000000E+2
7.00000000000000E+2      0.00000000000000E+0      0.00000000000000E+0
0.00000000000000E+0      0.00000000000000E+0      1.00000000000000E+0
    0.00000000000000E+0      0.00000000000000E+0      0.00000000000000E+0
   BmNSMass                 3     539       1     7.00000000000000E+2
7.00000000000000E+2      0.00000000000000E+0      0.00000000000000E+0
0.00000000000000E+0      0.00000000000000E+0      1.00000000000000E+0
    0.00000000000000E+0      0.00000000000000E+0      0.00000000000000E+0
   BmNSMass                 3     540       1     7.00000000000000E+2
7.00000000000000E+2      0.00000000000000E+0      0.00000000000000E+0
0.00000000000000E+0      0.00000000000000E+0      1.00000000000000E+0
    0.00000000000000E+0      0.00000000000000E+0      0.00000000000000E+0
   BmNSMass                 3     541       1     7.00000000000000E+2
7.00000000000000E+2      0.00000000000000E+0      0.00000000000000E+0
0.00000000000000E+0      0.00000000000000E+0      1.00000000000000E+0
    0.00000000000000E+0      0.00000000000000E+0      0.00000000000000E+0
   BmNSMass                 3     542       1     7.00000000000000E+2
7.00000000000000E+2      0.00000000000000E+0      0.00000000000000E+0
0.00000000000000E+0      0.00000000000000E+0      1.00000000000000E+0
    0.00000000000000E+0      0.00000000000000E+0      0.00000000000000E+0
   BmNSMass                 3     543       1     7.00000000000000E+2
7.00000000000000E+2      0.00000000000000E+0      0.00000000000000E+0
0.00000000000000E+0      0.00000000000000E+0      1.00000000000000E+0
    0.00000000000000E+0      0.00000000000000E+0      0.00000000000000E+0
   BmNSMass                 3     544       1     7.00000000000000E+2
7.00000000000000E+2      0.00000000000000E+0      0.00000000000000E+0
0.00000000000000E+0      0.00000000000000E+0      1.00000000000000E+0
    0.00000000000000E+0      0.00000000000000E+0      0.00000000000000E+0
   BmNSMass                 3     545       1     7.00000000000000E+2
7.00000000000000E+2      0.00000000000000E+0      0.00000000000000E+0
0.00000000000000E+0      0.00000000000000E+0      1.00000000000000E+0
    0.00000000000000E+0      0.00000000000000E+0      0.00000000000000E+0
   BmNSMass                 3     546       1     7.00000000000000E+2
7.00000000000000E+2      0.00000000000000E+0      0.00000000000000E+0
0.00000000000000E+0      0.00000000000000E+0      1.00000000000000E+0
    0.00000000000000E+0      0.00000000000000E+0      0.00000000000000E+0
   BmNSMass                 3     547       1     7.00000000000000E+2
7.00000000000000E+2      0.00000000000000E+0      0.00000000000000E+0
0.00000000000000E+0      0.00000000000000E+0      1.00000000000000E+0
    0.00000000000000E+0      0.00000000000000E+0      0.00000000000000E+0
   BmNSMass                 3     548       1     7.00000000000000E+2
7.00000000000000E+2      0.00000000000000E+0      0.00000000000000E+0
0.00000000000000E+0      0.00000000000000E+0      1.00000000000000E+0
    0.00000000000000E+0      0.00000000000000E+0      0.00000000000000E+0
   BmNSMass                 3     549       1     7.00000000000000E+2
7.00000000000000E+2      0.00000000000000E+0      0.00000000000000E+0
0.00000000000000E+0      0.00000000000000E+0      1.00000000000000E+0
    0.00000000000000E+0      0.00000000000000E+0      0.00000000000000E+0
   BmNSMass                 3     550       1     7.00000000000000E+2
7.00000000000000E+2      0.00000000000000E+0      0.00000000000000E+0
0.00000000000000E+0      0.00000000000000E+0      1.00000000000000E+0
```

```
    0.00000000000000E+0      0.00000000000000E+0      0.00000000000000E+0
   BmNSMass                  3     551       1     7.00000000000000E+2
7.00000000000000E+2      0.00000000000000E+0      0.00000000000000E+0
0.00000000000000E+0      0.00000000000000E+0      1.00000000000000E+0
    0.00000000000000E+0      0.00000000000000E+0      0.00000000000000E+0
   BmNSMass                  3     552       1     7.00000000000000E+2
7.00000000000000E+2      0.00000000000000E+0      0.00000000000000E+0
0.00000000000000E+0      0.00000000000000E+0      1.00000000000000E+0
    0.00000000000000E+0      0.00000000000000E+0      0.00000000000000E+0
   BmNSMass                  3     553       1     7.00000000000000E+2
7.00000000000000E+2      0.00000000000000E+0      0.00000000000000E+0
0.00000000000000E+0      0.00000000000000E+0      1.00000000000000E+0
    0.00000000000000E+0      0.00000000000000E+0      0.00000000000000E+0
   BmNSMass                  3     554       1     7.00000000000000E+2
7.00000000000000E+2      0.00000000000000E+0      0.00000000000000E+0
0.00000000000000E+0      0.00000000000000E+0      1.00000000000000E+0
    0.00000000000000E+0      0.00000000000000E+0      0.00000000000000E+0
   BmNSMass                  3     555       1     7.00000000000000E+2
7.00000000000000E+2      0.00000000000000E+0      0.00000000000000E+0
0.00000000000000E+0      0.00000000000000E+0      1.00000000000000E+0
    0.00000000000000E+0      0.00000000000000E+0      0.00000000000000E+0
   BmNSMass                  3     556       1     7.00000000000000E+2
7.00000000000000E+2      0.00000000000000E+0      0.00000000000000E+0
0.00000000000000E+0      0.00000000000000E+0      1.00000000000000E+0
    0.00000000000000E+0      0.00000000000000E+0      0.00000000000000E+0
   BmNSMass                  3     557       1     7.00000000000000E+2
7.00000000000000E+2      0.00000000000000E+0      0.00000000000000E+0
0.00000000000000E+0      0.00000000000000E+0      1.00000000000000E+0
    0.00000000000000E+0      0.00000000000000E+0      0.00000000000000E+0
   BmNSMass                  3     558       1     7.00000000000000E+2
7.00000000000000E+2      0.00000000000000E+0      0.00000000000000E+0
0.00000000000000E+0      0.00000000000000E+0      1.00000000000000E+0
    0.00000000000000E+0      0.00000000000000E+0      0.00000000000000E+0
   BmNSMass                  3     649       1     1.50000000000000E+2
1.50000000000000E+2      0.00000000000000E+0      0.00000000000000E+0
0.00000000000000E+0      0.00000000000000E+0      1.00000000000000E+0
    0.00000000000000E+0      0.00000000000000E+0      0.00000000000000E+0
   BmNSMass                  3     650       1     1.50000000000000E+2
1.50000000000000E+2      0.00000000000000E+0      0.00000000000000E+0
0.00000000000000E+0      0.00000000000000E+0      1.00000000000000E+0
    0.00000000000000E+0      0.00000000000000E+0      0.00000000000000E+0
   BmNSMass                  3     651       1     1.50000000000000E+2
1.50000000000000E+2      0.00000000000000E+0      0.00000000000000E+0
0.00000000000000E+0      0.00000000000000E+0      1.00000000000000E+0
    0.00000000000000E+0      0.00000000000000E+0      0.00000000000000E+0
   BmNSMass                  3     652       1     1.50000000000000E+2
1.50000000000000E+2      0.00000000000000E+0      0.00000000000000E+0
0.00000000000000E+0      0.00000000000000E+0      1.00000000000000E+0
    0.00000000000000E+0      0.00000000000000E+0      0.00000000000000E+0
   BmNSMass                  3     653       1     3.00000000000000E+2
3.00000000000000E+2      0.00000000000000E+0      0.00000000000000E+0
0.00000000000000E+0      0.00000000000000E+0      1.00000000000000E+0
    0.00000000000000E+0      0.00000000000000E+0      0.00000000000000E+0
   BmNSMass                  3     654       1     3.00000000000000E+2
```

```
3.00000000000000E+2      0.00000000000000E+0      0.00000000000000E+0
0.00000000000000E+0      0.00000000000000E+0      1.00000000000000E+0
    0.00000000000000E+0      0.00000000000000E+0      0.00000000000000E+0
   BmNSMass                 3     655       1     3.00000000000000E+2
3.00000000000000E+2      0.00000000000000E+0      0.00000000000000E+0
0.00000000000000E+0      0.00000000000000E+0      1.00000000000000E+0
    0.00000000000000E+0      0.00000000000000E+0      0.00000000000000E+0
   BmNSMass                 3     656       1     3.00000000000000E+2
3.00000000000000E+2      0.00000000000000E+0      0.00000000000000E+0
0.00000000000000E+0      0.00000000000000E+0      1.00000000000000E+0
    0.00000000000000E+0      0.00000000000000E+0      0.00000000000000E+0
   BmNSMass                 3     657       1     3.00000000000000E+2
3.00000000000000E+2      0.00000000000000E+0      0.00000000000000E+0
0.00000000000000E+0      0.00000000000000E+0      1.00000000000000E+0
    0.00000000000000E+0      0.00000000000000E+0      0.00000000000000E+0
   BmNSMass                 3     658       1     3.00000000000000E+2
3.00000000000000E+2      0.00000000000000E+0      0.00000000000000E+0
0.00000000000000E+0      0.00000000000000E+0      1.00000000000000E+0
    0.00000000000000E+0      0.00000000000000E+0      0.00000000000000E+0
   BmNSMass                 3     659       1     3.00000000000000E+2
3.00000000000000E+2      0.00000000000000E+0      0.00000000000000E+0
0.00000000000000E+0      0.00000000000000E+0      1.00000000000000E+0
    0.00000000000000E+0      0.00000000000000E+0      0.00000000000000E+0
   BmNSMass                 3     660       1     3.00000000000000E+2
3.00000000000000E+2      0.00000000000000E+0      0.00000000000000E+0
0.00000000000000E+0      0.00000000000000E+0      1.00000000000000E+0
    0.00000000000000E+0      0.00000000000000E+0      0.00000000000000E+0
   BmNSMass                 3     661       1     3.00000000000000E+2
3.00000000000000E+2      0.00000000000000E+0      0.00000000000000E+0
0.00000000000000E+0      0.00000000000000E+0      1.00000000000000E+0
    0.00000000000000E+0      0.00000000000000E+0      0.00000000000000E+0
   BmNSMass                 3     662       1     3.00000000000000E+2
3.00000000000000E+2      0.00000000000000E+0      0.00000000000000E+0
0.00000000000000E+0      0.00000000000000E+0      1.00000000000000E+0
    0.00000000000000E+0      0.00000000000000E+0      0.00000000000000E+0
   BmNSMass                 3     663       1     3.00000000000000E+2
3.00000000000000E+2      0.00000000000000E+0      0.00000000000000E+0
0.00000000000000E+0      0.00000000000000E+0      1.00000000000000E+0
    0.00000000000000E+0      0.00000000000000E+0      0.00000000000000E+0
   BmNSMass                 3     664       1     3.00000000000000E+2
3.00000000000000E+2      0.00000000000000E+0      0.00000000000000E+0
0.00000000000000E+0      0.00000000000000E+0      1.00000000000000E+0
    0.00000000000000E+0      0.00000000000000E+0      0.00000000000000E+0
   BmNSMass                 3     665       1     3.00000000000000E+2
3.00000000000000E+2      0.00000000000000E+0      0.00000000000000E+0
0.00000000000000E+0      0.00000000000000E+0      1.00000000000000E+0
    0.00000000000000E+0      0.00000000000000E+0      0.00000000000000E+0
   BmNSMass                 3     666       1     3.00000000000000E+2
3.00000000000000E+2      0.00000000000000E+0      0.00000000000000E+0
0.00000000000000E+0      0.00000000000000E+0      1.00000000000000E+0
    0.00000000000000E+0      0.00000000000000E+0      0.00000000000000E+0
   BmNSMass                 3     667       1     3.00000000000000E+2
3.00000000000000E+2      0.00000000000000E+0      0.00000000000000E+0
0.00000000000000E+0      0.00000000000000E+0      1.00000000000000E+0
```

```
    0.00000000000000E+0      0.00000000000000E+0      0.00000000000000E+0
   BmNSMass                 3     668       1     3.00000000000000E+2
3.00000000000000E+2      0.00000000000000E+0      0.00000000000000E+0
0.00000000000000E+0      0.00000000000000E+0      1.00000000000000E+0
    0.00000000000000E+0      0.00000000000000E+0      0.00000000000000E+0

/ ____________________________________________________________________
/ BEAM NON-STRUCTURAL MASSES
/ G02b - Carico Pannelli Fonoassorbenti DX
   BmNSMass                 4      13       1     1.50000000000000E+2
1.50000000000000E+2      0.00000000000000E+0      0.00000000000000E+0
0.00000000000000E+0      0.00000000000000E+0      1.00000000000000E+0
    0.00000000000000E+0      0.00000000000000E+0      0.00000000000000E+0
   BmNSMass                 4      14       1     3.00000000000000E+2
3.00000000000000E+2      0.00000000000000E+0      0.00000000000000E+0
0.00000000000000E+0      0.00000000000000E+0      1.00000000000000E+0
    0.00000000000000E+0      0.00000000000000E+0      0.00000000000000E+0
   BmNSMass                 4      15       1     3.00000000000000E+2
3.00000000000000E+2      0.00000000000000E+0      0.00000000000000E+0
0.00000000000000E+0      0.00000000000000E+0      1.00000000000000E+0
    0.00000000000000E+0      0.00000000000000E+0      0.00000000000000E+0
   BmNSMass                 4      16       1     3.00000000000000E+2
3.00000000000000E+2      0.00000000000000E+0      0.00000000000000E+0
0.00000000000000E+0      0.00000000000000E+0      1.00000000000000E+0
    0.00000000000000E+0      0.00000000000000E+0      0.00000000000000E+0
   BmNSMass                 4      17       1     3.00000000000000E+2
3.00000000000000E+2      0.00000000000000E+0      0.00000000000000E+0
0.00000000000000E+0      0.00000000000000E+0      1.00000000000000E+0
    0.00000000000000E+0      0.00000000000000E+0      0.00000000000000E+0
   BmNSMass                 4      18       1     3.00000000000000E+2
3.00000000000000E+2      0.00000000000000E+0      0.00000000000000E+0
0.00000000000000E+0      0.00000000000000E+0      1.00000000000000E+0
    0.00000000000000E+0      0.00000000000000E+0      0.00000000000000E+0
   BmNSMass                 4      19       1     3.00000000000000E+2
3.00000000000000E+2      0.00000000000000E+0      0.00000000000000E+0
0.00000000000000E+0      0.00000000000000E+0      1.00000000000000E+0
    0.00000000000000E+0      0.00000000000000E+0      0.00000000000000E+0
   BmNSMass                 4      20       1     3.00000000000000E+2
3.00000000000000E+2      0.00000000000000E+0      0.00000000000000E+0
0.00000000000000E+0      0.00000000000000E+0      1.00000000000000E+0
    0.00000000000000E+0      0.00000000000000E+0      0.00000000000000E+0
   BmNSMass                 4      21       1     3.00000000000000E+2
3.00000000000000E+2      0.00000000000000E+0      0.00000000000000E+0
0.00000000000000E+0      0.00000000000000E+0      1.00000000000000E+0
    0.00000000000000E+0      0.00000000000000E+0      0.00000000000000E+0
   BmNSMass                 4      22       1     1.50000000000000E+2
1.50000000000000E+2      0.00000000000000E+0      0.00000000000000E+0
0.00000000000000E+0      0.00000000000000E+0      1.00000000000000E+0
    0.00000000000000E+0      0.00000000000000E+0      0.00000000000000E+0
   BmNSMass                 4     164       1     1.50000000000000E+2
1.50000000000000E+2      0.00000000000000E+0      0.00000000000000E+0
0.00000000000000E+0      0.00000000000000E+0      1.00000000000000E+0
    0.00000000000000E+0      0.00000000000000E+0      0.00000000000000E+0
   BmNSMass                 4     165       1     1.50000000000000E+2
```

```
1.50000000000000E+2      0.00000000000000E+0      0.00000000000000E+0
0.00000000000000E+0      0.00000000000000E+0      1.00000000000000E+0
    0.00000000000000E+0      0.00000000000000E+0      0.00000000000000E+0
   BmNSMass                 4     166         1     1.50000000000000E+2
1.50000000000000E+2      0.00000000000000E+0      0.00000000000000E+0
0.00000000000000E+0      0.00000000000000E+0      1.00000000000000E+0
    0.00000000000000E+0      0.00000000000000E+0      0.00000000000000E+0
   BmNSMass                 4     167         1     1.50000000000000E+2
1.50000000000000E+2      0.00000000000000E+0      0.00000000000000E+0
0.00000000000000E+0      0.00000000000000E+0      1.00000000000000E+0
    0.00000000000000E+0      0.00000000000000E+0      0.00000000000000E+0
   BmNSMass                 4     168         1     1.50000000000000E+2
1.50000000000000E+2      0.00000000000000E+0      0.00000000000000E+0
0.00000000000000E+0      0.00000000000000E+0      1.00000000000000E+0
    0.00000000000000E+0      0.00000000000000E+0      0.00000000000000E+0
   BmNSMass                 4     169         1     1.50000000000000E+2
1.50000000000000E+2      0.00000000000000E+0      0.00000000000000E+0
0.00000000000000E+0      0.00000000000000E+0      1.00000000000000E+0
    0.00000000000000E+0      0.00000000000000E+0      0.00000000000000E+0
   BmNSMass                 4     170         1     1.50000000000000E+2
1.50000000000000E+2      0.00000000000000E+0      0.00000000000000E+0
0.00000000000000E+0      0.00000000000000E+0      1.00000000000000E+0
    0.00000000000000E+0      0.00000000000000E+0      0.00000000000000E+0
   BmNSMass                 4     171         1     1.50000000000000E+2
1.50000000000000E+2      0.00000000000000E+0      0.00000000000000E+0
0.00000000000000E+0      0.00000000000000E+0      1.00000000000000E+0
    0.00000000000000E+0      0.00000000000000E+0      0.00000000000000E+0
   BmNSMass                 4     172         1     1.50000000000000E+2
1.50000000000000E+2      0.00000000000000E+0      0.00000000000000E+0
0.00000000000000E+0      0.00000000000000E+0      1.00000000000000E+0
    0.00000000000000E+0      0.00000000000000E+0      0.00000000000000E+0
   BmNSMass                 4     173         1     1.50000000000000E+2
1.50000000000000E+2      0.00000000000000E+0      0.00000000000000E+0
0.00000000000000E+0      0.00000000000000E+0      1.00000000000000E+0
    0.00000000000000E+0      0.00000000000000E+0      0.00000000000000E+0
   BmNSMass                 4     174         1     1.50000000000000E+2
1.50000000000000E+2      0.00000000000000E+0      0.00000000000000E+0
0.00000000000000E+0      0.00000000000000E+0      1.00000000000000E+0
    0.00000000000000E+0      0.00000000000000E+0      0.00000000000000E+0
   BmNSMass                 4     175         1     1.50000000000000E+2
1.50000000000000E+2      0.00000000000000E+0      0.00000000000000E+0
0.00000000000000E+0      0.00000000000000E+0      1.00000000000000E+0
    0.00000000000000E+0      0.00000000000000E+0      0.00000000000000E+0
   BmNSMass                 4     176         1     1.50000000000000E+2
1.50000000000000E+2      0.00000000000000E+0      0.00000000000000E+0
0.00000000000000E+0      0.00000000000000E+0      1.00000000000000E+0
    0.00000000000000E+0      0.00000000000000E+0      0.00000000000000E+0
   BmNSMass                 4     177         1     1.50000000000000E+2
1.50000000000000E+2      0.00000000000000E+0      0.00000000000000E+0
0.00000000000000E+0      0.00000000000000E+0      1.00000000000000E+0
    0.00000000000000E+0      0.00000000000000E+0      0.00000000000000E+0
   BmNSMass                 4     178         1     1.50000000000000E+2
1.50000000000000E+2      0.00000000000000E+0      0.00000000000000E+0
0.00000000000000E+0      0.00000000000000E+0      1.00000000000000E+0
```

```
    0.00000000000000E+0      0.00000000000000E+0      0.00000000000000E+0
   BmNSMass                 4     179         1     1.50000000000000E+2
1.50000000000000E+2      0.00000000000000E+0      0.00000000000000E+0
0.00000000000000E+0      0.00000000000000E+0      1.00000000000000E+0
    0.00000000000000E+0      0.00000000000000E+0      0.00000000000000E+0
   BmNSMass                 4     180         1     1.50000000000000E+2
1.50000000000000E+2      0.00000000000000E+0      0.00000000000000E+0
0.00000000000000E+0      0.00000000000000E+0      1.00000000000000E+0
    0.00000000000000E+0      0.00000000000000E+0      0.00000000000000E+0
   BmNSMass                 4     181         1     1.50000000000000E+2
1.50000000000000E+2      0.00000000000000E+0      0.00000000000000E+0
0.00000000000000E+0      0.00000000000000E+0      1.00000000000000E+0
    0.00000000000000E+0      0.00000000000000E+0      0.00000000000000E+0
   BmNSMass                 4     182         1     1.50000000000000E+2
1.50000000000000E+2      0.00000000000000E+0      0.00000000000000E+0
0.00000000000000E+0      0.00000000000000E+0      1.00000000000000E+0
    0.00000000000000E+0      0.00000000000000E+0      0.00000000000000E+0
   BmNSMass                 4     183         1     1.50000000000000E+2
1.50000000000000E+2      0.00000000000000E+0      0.00000000000000E+0
0.00000000000000E+0      0.00000000000000E+0      1.00000000000000E+0
    0.00000000000000E+0      0.00000000000000E+0      0.00000000000000E+0
   BmNSMass                 4     184         1     1.50000000000000E+2
1.50000000000000E+2      0.00000000000000E+0      0.00000000000000E+0
0.00000000000000E+0      0.00000000000000E+0      1.00000000000000E+0
    0.00000000000000E+0      0.00000000000000E+0      0.00000000000000E+0
   BmNSMass                 4     185         1     1.50000000000000E+2
1.50000000000000E+2      0.00000000000000E+0      0.00000000000000E+0
0.00000000000000E+0      0.00000000000000E+0      1.00000000000000E+0
    0.00000000000000E+0      0.00000000000000E+0      0.00000000000000E+0
   BmNSMass                 4     186         1     1.50000000000000E+2
1.50000000000000E+2      0.00000000000000E+0      0.00000000000000E+0
0.00000000000000E+0      0.00000000000000E+0      1.00000000000000E+0
    0.00000000000000E+0      0.00000000000000E+0      0.00000000000000E+0
   BmNSMass                 4     187         1     1.50000000000000E+2
1.50000000000000E+2      0.00000000000000E+0      0.00000000000000E+0
0.00000000000000E+0      0.00000000000000E+0      1.00000000000000E+0
    0.00000000000000E+0      0.00000000000000E+0      0.00000000000000E+0
   BmNSMass                 4     188         1     1.50000000000000E+2
1.50000000000000E+2      0.00000000000000E+0      0.00000000000000E+0
0.00000000000000E+0      0.00000000000000E+0      1.00000000000000E+0
    0.00000000000000E+0      0.00000000000000E+0      0.00000000000000E+0
   BmNSMass                 4     189         1     1.50000000000000E+2
1.50000000000000E+2      0.00000000000000E+0      0.00000000000000E+0
0.00000000000000E+0      0.00000000000000E+0      1.00000000000000E+0
    0.00000000000000E+0      0.00000000000000E+0      0.00000000000000E+0
   BmNSMass                 4     190         1     1.50000000000000E+2
1.50000000000000E+2      0.00000000000000E+0      0.00000000000000E+0
0.00000000000000E+0      0.00000000000000E+0      1.00000000000000E+0
    0.00000000000000E+0      0.00000000000000E+0      0.00000000000000E+0
   BmNSMass                 4     191         1     1.50000000000000E+2
1.50000000000000E+2      0.00000000000000E+0      0.00000000000000E+0
0.00000000000000E+0      0.00000000000000E+0      1.00000000000000E+0
    0.00000000000000E+0      0.00000000000000E+0      0.00000000000000E+0
   BmNSMass                 4     192         1     1.50000000000000E+2
```

```
1.50000000000000E+2      0.00000000000000E+0      0.00000000000000E+0
0.00000000000000E+0      0.00000000000000E+0      1.00000000000000E+0
    0.00000000000000E+0      0.00000000000000E+0      0.00000000000000E+0
   BmNSMass                 4     193       1     1.50000000000000E+2
1.50000000000000E+2      0.00000000000000E+0      0.00000000000000E+0
0.00000000000000E+0      0.00000000000000E+0      1.00000000000000E+0
    0.00000000000000E+0      0.00000000000000E+0      0.00000000000000E+0
   BmNSMass                 4     194       1     1.50000000000000E+2
1.50000000000000E+2      0.00000000000000E+0      0.00000000000000E+0
0.00000000000000E+0      0.00000000000000E+0      1.00000000000000E+0
    0.00000000000000E+0      0.00000000000000E+0      0.00000000000000E+0
   BmNSMass                 4     195       1     1.50000000000000E+2
1.50000000000000E+2      0.00000000000000E+0      0.00000000000000E+0
0.00000000000000E+0      0.00000000000000E+0      1.00000000000000E+0
    0.00000000000000E+0      0.00000000000000E+0      0.00000000000000E+0
   BmNSMass                 4     196       1     1.50000000000000E+2
1.50000000000000E+2      0.00000000000000E+0      0.00000000000000E+0
0.00000000000000E+0      0.00000000000000E+0      1.00000000000000E+0
    0.00000000000000E+0      0.00000000000000E+0      0.00000000000000E+0
   BmNSMass                 4     197       1     1.50000000000000E+2
1.50000000000000E+2      0.00000000000000E+0      0.00000000000000E+0
0.00000000000000E+0      0.00000000000000E+0      1.00000000000000E+0
    0.00000000000000E+0      0.00000000000000E+0      0.00000000000000E+0
   BmNSMass                 4     198       1     1.50000000000000E+2
1.50000000000000E+2      0.00000000000000E+0      0.00000000000000E+0
0.00000000000000E+0      0.00000000000000E+0      1.00000000000000E+0
    0.00000000000000E+0      0.00000000000000E+0      0.00000000000000E+0
   BmNSMass                 4     199       1     1.50000000000000E+2
1.50000000000000E+2      0.00000000000000E+0      0.00000000000000E+0
0.00000000000000E+0      0.00000000000000E+0      1.00000000000000E+0
    0.00000000000000E+0      0.00000000000000E+0      0.00000000000000E+0
   BmNSMass                 4     200       1     1.50000000000000E+2
1.50000000000000E+2      0.00000000000000E+0      0.00000000000000E+0
0.00000000000000E+0      0.00000000000000E+0      1.00000000000000E+0
    0.00000000000000E+0      0.00000000000000E+0      0.00000000000000E+0
   BmNSMass                 4     201       1     1.50000000000000E+2
1.50000000000000E+2      0.00000000000000E+0      0.00000000000000E+0
0.00000000000000E+0      0.00000000000000E+0      1.00000000000000E+0
    0.00000000000000E+0      0.00000000000000E+0      0.00000000000000E+0
   BmNSMass                 4     202       1     1.50000000000000E+2
1.50000000000000E+2      0.00000000000000E+0      0.00000000000000E+0
0.00000000000000E+0      0.00000000000000E+0      1.00000000000000E+0
    0.00000000000000E+0      0.00000000000000E+0      0.00000000000000E+0
   BmNSMass                 4     203       1     1.50000000000000E+2
1.50000000000000E+2      0.00000000000000E+0      0.00000000000000E+0
0.00000000000000E+0      0.00000000000000E+0      1.00000000000000E+0
    0.00000000000000E+0      0.00000000000000E+0      0.00000000000000E+0
   BmNSMass                 4     204       1     1.50000000000000E+2
1.50000000000000E+2      0.00000000000000E+0      0.00000000000000E+0
0.00000000000000E+0      0.00000000000000E+0      1.00000000000000E+0
    0.00000000000000E+0      0.00000000000000E+0      0.00000000000000E+0
   BmNSMass                 4     205       1     1.50000000000000E+2
1.50000000000000E+2      0.00000000000000E+0      0.00000000000000E+0
0.00000000000000E+0      0.00000000000000E+0      1.00000000000000E+0
```

```
    0.00000000000000E+0      0.00000000000000E+0      0.00000000000000E+0
   BmNSMass                 4     206       1     1.50000000000000E+2
1.50000000000000E+2      0.00000000000000E+0      0.00000000000000E+0
0.00000000000000E+0      0.00000000000000E+0      1.00000000000000E+0
    0.00000000000000E+0      0.00000000000000E+0      0.00000000000000E+0
   BmNSMass                 4     207       1     1.50000000000000E+2
1.50000000000000E+2      0.00000000000000E+0      0.00000000000000E+0
0.00000000000000E+0      0.00000000000000E+0      1.00000000000000E+0
    0.00000000000000E+0      0.00000000000000E+0      0.00000000000000E+0
   BmNSMass                 4     208       1     1.50000000000000E+2
1.50000000000000E+2      0.00000000000000E+0      0.00000000000000E+0
0.00000000000000E+0      0.00000000000000E+0      1.00000000000000E+0
    0.00000000000000E+0      0.00000000000000E+0      0.00000000000000E+0
   BmNSMass                 4     209       1     1.50000000000000E+2
1.50000000000000E+2      0.00000000000000E+0      0.00000000000000E+0
0.00000000000000E+0      0.00000000000000E+0      1.00000000000000E+0
    0.00000000000000E+0      0.00000000000000E+0      0.00000000000000E+0
   BmNSMass                 4     210       1     1.50000000000000E+2
1.50000000000000E+2      0.00000000000000E+0      0.00000000000000E+0
0.00000000000000E+0      0.00000000000000E+0      1.00000000000000E+0
    0.00000000000000E+0      0.00000000000000E+0      0.00000000000000E+0
   BmNSMass                 4     211       1     1.50000000000000E+2
1.50000000000000E+2      0.00000000000000E+0      0.00000000000000E+0
0.00000000000000E+0      0.00000000000000E+0      1.00000000000000E+0
    0.00000000000000E+0      0.00000000000000E+0      0.00000000000000E+0
   BmNSMass                 4     212       1     1.50000000000000E+2
1.50000000000000E+2      0.00000000000000E+0      0.00000000000000E+0
0.00000000000000E+0      0.00000000000000E+0      1.00000000000000E+0
    0.00000000000000E+0      0.00000000000000E+0      0.00000000000000E+0
   BmNSMass                 4     213       1     1.50000000000000E+2
1.50000000000000E+2      0.00000000000000E+0      0.00000000000000E+0
0.00000000000000E+0      0.00000000000000E+0      1.00000000000000E+0
    0.00000000000000E+0      0.00000000000000E+0      0.00000000000000E+0
   BmNSMass                 4     214       1     1.50000000000000E+2
1.50000000000000E+2      0.00000000000000E+0      0.00000000000000E+0
0.00000000000000E+0      0.00000000000000E+0      1.00000000000000E+0
    0.00000000000000E+0      0.00000000000000E+0      0.00000000000000E+0
   BmNSMass                 4     215       1     1.50000000000000E+2
1.50000000000000E+2      0.00000000000000E+0      0.00000000000000E+0
0.00000000000000E+0      0.00000000000000E+0      1.00000000000000E+0
    0.00000000000000E+0      0.00000000000000E+0      0.00000000000000E+0
   BmNSMass                 4     216       1     1.50000000000000E+2
1.50000000000000E+2      0.00000000000000E+0      0.00000000000000E+0
0.00000000000000E+0      0.00000000000000E+0      1.00000000000000E+0
    0.00000000000000E+0      0.00000000000000E+0      0.00000000000000E+0
   BmNSMass                 4     217       1     1.50000000000000E+2
1.50000000000000E+2      0.00000000000000E+0      0.00000000000000E+0
0.00000000000000E+0      0.00000000000000E+0      1.00000000000000E+0
    0.00000000000000E+0      0.00000000000000E+0      0.00000000000000E+0
   BmNSMass                 4     218       1     3.00000000000000E+2
3.00000000000000E+2      0.00000000000000E+0      0.00000000000000E+0
0.00000000000000E+0      0.00000000000000E+0      1.00000000000000E+0
    0.00000000000000E+0      0.00000000000000E+0      0.00000000000000E+0
   BmNSMass                 4     219       1     3.00000000000000E+2
```

```
3.00000000000000E+2      0.00000000000000E+0      0.00000000000000E+0
0.00000000000000E+0      0.00000000000000E+0      1.00000000000000E+0
    0.00000000000000E+0      0.00000000000000E+0      0.00000000000000E+0
   BmNSMass                 4     220        1      3.00000000000000E+2
3.00000000000000E+2      0.00000000000000E+0      0.00000000000000E+0
0.00000000000000E+0      0.00000000000000E+0      1.00000000000000E+0
    0.00000000000000E+0      0.00000000000000E+0      0.00000000000000E+0
   BmNSMass                 4     221        1      3.00000000000000E+2
3.00000000000000E+2      0.00000000000000E+0      0.00000000000000E+0
0.00000000000000E+0      0.00000000000000E+0      1.00000000000000E+0
    0.00000000000000E+0      0.00000000000000E+0      0.00000000000000E+0
   BmNSMass                 4     222        1      3.00000000000000E+2
3.00000000000000E+2      0.00000000000000E+0      0.00000000000000E+0
0.00000000000000E+0      0.00000000000000E+0      1.00000000000000E+0
    0.00000000000000E+0      0.00000000000000E+0      0.00000000000000E+0
   BmNSMass                 4     223        1      3.00000000000000E+2
3.00000000000000E+2      0.00000000000000E+0      0.00000000000000E+0
0.00000000000000E+0      0.00000000000000E+0      1.00000000000000E+0
    0.00000000000000E+0      0.00000000000000E+0      0.00000000000000E+0
   BmNSMass                 4     224        1      3.00000000000000E+2
3.00000000000000E+2      0.00000000000000E+0      0.00000000000000E+0
0.00000000000000E+0      0.00000000000000E+0      1.00000000000000E+0
    0.00000000000000E+0      0.00000000000000E+0      0.00000000000000E+0
   BmNSMass                 4     225        1      3.00000000000000E+2
3.00000000000000E+2      0.00000000000000E+0      0.00000000000000E+0
0.00000000000000E+0      0.00000000000000E+0      1.00000000000000E+0
    0.00000000000000E+0      0.00000000000000E+0      0.00000000000000E+0
   BmNSMass                 4     226        1      3.00000000000000E+2
3.00000000000000E+2      0.00000000000000E+0      0.00000000000000E+0
0.00000000000000E+0      0.00000000000000E+0      1.00000000000000E+0
    0.00000000000000E+0      0.00000000000000E+0      0.00000000000000E+0
   BmNSMass                 4     227        1      3.00000000000000E+2
3.00000000000000E+2      0.00000000000000E+0      0.00000000000000E+0
0.00000000000000E+0      0.00000000000000E+0      1.00000000000000E+0
    0.00000000000000E+0      0.00000000000000E+0      0.00000000000000E+0
   BmNSMass                 4     228        1      3.00000000000000E+2
3.00000000000000E+2      0.00000000000000E+0      0.00000000000000E+0
0.00000000000000E+0      0.00000000000000E+0      1.00000000000000E+0
    0.00000000000000E+0      0.00000000000000E+0      0.00000000000000E+0
   BmNSMass                 4     229        1      3.00000000000000E+2
3.00000000000000E+2      0.00000000000000E+0      0.00000000000000E+0
0.00000000000000E+0      0.00000000000000E+0      1.00000000000000E+0
    0.00000000000000E+0      0.00000000000000E+0      0.00000000000000E+0
   BmNSMass                 4     230        1      3.00000000000000E+2
3.00000000000000E+2      0.00000000000000E+0      0.00000000000000E+0
0.00000000000000E+0      0.00000000000000E+0      1.00000000000000E+0
    0.00000000000000E+0      0.00000000000000E+0      0.00000000000000E+0
   BmNSMass                 4     231        1      3.00000000000000E+2
3.00000000000000E+2      0.00000000000000E+0      0.00000000000000E+0
0.00000000000000E+0      0.00000000000000E+0      1.00000000000000E+0
    0.00000000000000E+0      0.00000000000000E+0      0.00000000000000E+0
   BmNSMass                 4     232        1      3.00000000000000E+2
3.00000000000000E+2      0.00000000000000E+0      0.00000000000000E+0
0.00000000000000E+0      0.00000000000000E+0      1.00000000000000E+0
```

```
    0.00000000000000E+0      0.00000000000000E+0      0.00000000000000E+0
   BmNSMass                 4      233        1      3.00000000000000E+2
3.00000000000000E+2      0.00000000000000E+0      0.00000000000000E+0
0.00000000000000E+0      0.00000000000000E+0      1.00000000000000E+0
    0.00000000000000E+0      0.00000000000000E+0      0.00000000000000E+0
   BmNSMass                 4      234        1      3.00000000000000E+2
3.00000000000000E+2      0.00000000000000E+0      0.00000000000000E+0
0.00000000000000E+0      0.00000000000000E+0      1.00000000000000E+0
    0.00000000000000E+0      0.00000000000000E+0      0.00000000000000E+0
   BmNSMass                 4      235        1      3.00000000000000E+2
3.00000000000000E+2      0.00000000000000E+0      0.00000000000000E+0
0.00000000000000E+0      0.00000000000000E+0      1.00000000000000E+0
    0.00000000000000E+0      0.00000000000000E+0      0.00000000000000E+0
   BmNSMass                 4      236        1      3.00000000000000E+2
3.00000000000000E+2      0.00000000000000E+0      0.00000000000000E+0
0.00000000000000E+0      0.00000000000000E+0      1.00000000000000E+0
    0.00000000000000E+0      0.00000000000000E+0      0.00000000000000E+0
   BmNSMass                 4      237        1      3.00000000000000E+2
3.00000000000000E+2      0.00000000000000E+0      0.00000000000000E+0
0.00000000000000E+0      0.00000000000000E+0      1.00000000000000E+0
    0.00000000000000E+0      0.00000000000000E+0      0.00000000000000E+0
   BmNSMass                 4      238        1      3.00000000000000E+2
3.00000000000000E+2      0.00000000000000E+0      0.00000000000000E+0
0.00000000000000E+0      0.00000000000000E+0      1.00000000000000E+0
    0.00000000000000E+0      0.00000000000000E+0      0.00000000000000E+0
   BmNSMass                 4      239        1      3.00000000000000E+2
3.00000000000000E+2      0.00000000000000E+0      0.00000000000000E+0
0.00000000000000E+0      0.00000000000000E+0      1.00000000000000E+0
    0.00000000000000E+0      0.00000000000000E+0      0.00000000000000E+0
   BmNSMass                 4      240        1      3.00000000000000E+2
3.00000000000000E+2      0.00000000000000E+0      0.00000000000000E+0
0.00000000000000E+0      0.00000000000000E+0      1.00000000000000E+0
    0.00000000000000E+0      0.00000000000000E+0      0.00000000000000E+0
   BmNSMass                 4      241        1      3.00000000000000E+2
3.00000000000000E+2      0.00000000000000E+0      0.00000000000000E+0
0.00000000000000E+0      0.00000000000000E+0      1.00000000000000E+0
    0.00000000000000E+0      0.00000000000000E+0      0.00000000000000E+0
   BmNSMass                 4      242        1      3.00000000000000E+2
3.00000000000000E+2      0.00000000000000E+0      0.00000000000000E+0
0.00000000000000E+0      0.00000000000000E+0      1.00000000000000E+0
    0.00000000000000E+0      0.00000000000000E+0      0.00000000000000E+0
   BmNSMass                 4      243        1      3.00000000000000E+2
3.00000000000000E+2      0.00000000000000E+0      0.00000000000000E+0
0.00000000000000E+0      0.00000000000000E+0      1.00000000000000E+0
    0.00000000000000E+0      0.00000000000000E+0      0.00000000000000E+0
   BmNSMass                 4      244        1      3.00000000000000E+2
3.00000000000000E+2      0.00000000000000E+0      0.00000000000000E+0
0.00000000000000E+0      0.00000000000000E+0      1.00000000000000E+0
    0.00000000000000E+0      0.00000000000000E+0      0.00000000000000E+0
   BmNSMass                 4      245        1      3.00000000000000E+2
3.00000000000000E+2      0.00000000000000E+0      0.00000000000000E+0
0.00000000000000E+0      0.00000000000000E+0      1.00000000000000E+0
    0.00000000000000E+0      0.00000000000000E+0      0.00000000000000E+0
   BmNSMass                 4      246        1      3.00000000000000E+2
```

```
3.00000000000000E+2      0.00000000000000E+0      0.00000000000000E+0
0.00000000000000E+0      0.00000000000000E+0      1.00000000000000E+0
    0.00000000000000E+0      0.00000000000000E+0      0.00000000000000E+0
   BmNSMass                 4      247        1      3.00000000000000E+2
3.00000000000000E+2      0.00000000000000E+0      0.00000000000000E+0
0.00000000000000E+0      0.00000000000000E+0      1.00000000000000E+0
    0.00000000000000E+0      0.00000000000000E+0      0.00000000000000E+0
   BmNSMass                 4      248        1      3.00000000000000E+2
3.00000000000000E+2      0.00000000000000E+0      0.00000000000000E+0
0.00000000000000E+0      0.00000000000000E+0      1.00000000000000E+0
    0.00000000000000E+0      0.00000000000000E+0      0.00000000000000E+0
   BmNSMass                 4      249        1      3.00000000000000E+2
3.00000000000000E+2      0.00000000000000E+0      0.00000000000000E+0
0.00000000000000E+0      0.00000000000000E+0      1.00000000000000E+0
    0.00000000000000E+0      0.00000000000000E+0      0.00000000000000E+0
   BmNSMass                 4      250        1      3.00000000000000E+2
3.00000000000000E+2      0.00000000000000E+0      0.00000000000000E+0
0.00000000000000E+0      0.00000000000000E+0      1.00000000000000E+0
    0.00000000000000E+0      0.00000000000000E+0      0.00000000000000E+0
   BmNSMass                 4      251        1      3.00000000000000E+2
3.00000000000000E+2      0.00000000000000E+0      0.00000000000000E+0
0.00000000000000E+0      0.00000000000000E+0      1.00000000000000E+0
    0.00000000000000E+0      0.00000000000000E+0      0.00000000000000E+0
   BmNSMass                 4      252        1      3.00000000000000E+2
3.00000000000000E+2      0.00000000000000E+0      0.00000000000000E+0
0.00000000000000E+0      0.00000000000000E+0      1.00000000000000E+0
    0.00000000000000E+0      0.00000000000000E+0      0.00000000000000E+0
   BmNSMass                 4      253        1      3.00000000000000E+2
3.00000000000000E+2      0.00000000000000E+0      0.00000000000000E+0
0.00000000000000E+0      0.00000000000000E+0      1.00000000000000E+0
    0.00000000000000E+0      0.00000000000000E+0      0.00000000000000E+0
   BmNSMass                 4      254        1      3.00000000000000E+2
3.00000000000000E+2      0.00000000000000E+0      0.00000000000000E+0
0.00000000000000E+0      0.00000000000000E+0      1.00000000000000E+0
    0.00000000000000E+0      0.00000000000000E+0      0.00000000000000E+0
   BmNSMass                 4      255        1      3.00000000000000E+2
3.00000000000000E+2      0.00000000000000E+0      0.00000000000000E+0
0.00000000000000E+0      0.00000000000000E+0      1.00000000000000E+0
    0.00000000000000E+0      0.00000000000000E+0      0.00000000000000E+0
   BmNSMass                 4      256        1      3.00000000000000E+2
3.00000000000000E+2      0.00000000000000E+0      0.00000000000000E+0
0.00000000000000E+0      0.00000000000000E+0      1.00000000000000E+0
    0.00000000000000E+0      0.00000000000000E+0      0.00000000000000E+0
   BmNSMass                 4      257        1      3.00000000000000E+2
3.00000000000000E+2      0.00000000000000E+0      0.00000000000000E+0
0.00000000000000E+0      0.00000000000000E+0      1.00000000000000E+0
    0.00000000000000E+0      0.00000000000000E+0      0.00000000000000E+0
   BmNSMass                 4      258        1      3.00000000000000E+2
3.00000000000000E+2      0.00000000000000E+0      0.00000000000000E+0
0.00000000000000E+0      0.00000000000000E+0      1.00000000000000E+0
    0.00000000000000E+0      0.00000000000000E+0      0.00000000000000E+0
   BmNSMass                 4      259        1      3.00000000000000E+2
3.00000000000000E+2      0.00000000000000E+0      0.00000000000000E+0
0.00000000000000E+0      0.00000000000000E+0      1.00000000000000E+0
```

```
    0.00000000000000E+0      0.00000000000000E+0      0.00000000000000E+0
   BmNSMass                 4     260        1     3.00000000000000E+2
3.00000000000000E+2      0.00000000000000E+0      0.00000000000000E+0
0.00000000000000E+0      0.00000000000000E+0      1.00000000000000E+0
    0.00000000000000E+0      0.00000000000000E+0      0.00000000000000E+0
   BmNSMass                 4     261        1     3.00000000000000E+2
3.00000000000000E+2      0.00000000000000E+0      0.00000000000000E+0
0.00000000000000E+0      0.00000000000000E+0      1.00000000000000E+0
    0.00000000000000E+0      0.00000000000000E+0      0.00000000000000E+0
   BmNSMass                 4     262        1     3.00000000000000E+2
3.00000000000000E+2      0.00000000000000E+0      0.00000000000000E+0
0.00000000000000E+0      0.00000000000000E+0      1.00000000000000E+0
    0.00000000000000E+0      0.00000000000000E+0      0.00000000000000E+0
   BmNSMass                 4     263        1     3.00000000000000E+2
3.00000000000000E+2      0.00000000000000E+0      0.00000000000000E+0
0.00000000000000E+0      0.00000000000000E+0      1.00000000000000E+0
    0.00000000000000E+0      0.00000000000000E+0      0.00000000000000E+0
   BmNSMass                 4     264        1     3.00000000000000E+2
3.00000000000000E+2      0.00000000000000E+0      0.00000000000000E+0
0.00000000000000E+0      0.00000000000000E+0      1.00000000000000E+0
    0.00000000000000E+0      0.00000000000000E+0      0.00000000000000E+0
   BmNSMass                 4     265        1     3.00000000000000E+2
3.00000000000000E+2      0.00000000000000E+0      0.00000000000000E+0
0.00000000000000E+0      0.00000000000000E+0      1.00000000000000E+0
    0.00000000000000E+0      0.00000000000000E+0      0.00000000000000E+0
   BmNSMass                 4     266        1     3.00000000000000E+2
3.00000000000000E+2      0.00000000000000E+0      0.00000000000000E+0
0.00000000000000E+0      0.00000000000000E+0      1.00000000000000E+0
    0.00000000000000E+0      0.00000000000000E+0      0.00000000000000E+0
   BmNSMass                 4     267        1     3.00000000000000E+2
3.00000000000000E+2      0.00000000000000E+0      0.00000000000000E+0
0.00000000000000E+0      0.00000000000000E+0      1.00000000000000E+0
    0.00000000000000E+0      0.00000000000000E+0      0.00000000000000E+0
   BmNSMass                 4     268        1     3.00000000000000E+2
3.00000000000000E+2      0.00000000000000E+0      0.00000000000000E+0
0.00000000000000E+0      0.00000000000000E+0      1.00000000000000E+0
    0.00000000000000E+0      0.00000000000000E+0      0.00000000000000E+0
   BmNSMass                 4     269        1     3.00000000000000E+2
3.00000000000000E+2      0.00000000000000E+0      0.00000000000000E+0
0.00000000000000E+0      0.00000000000000E+0      1.00000000000000E+0
    0.00000000000000E+0      0.00000000000000E+0      0.00000000000000E+0
   BmNSMass                 4     270        1     3.00000000000000E+2
3.00000000000000E+2      0.00000000000000E+0      0.00000000000000E+0
0.00000000000000E+0      0.00000000000000E+0      1.00000000000000E+0
    0.00000000000000E+0      0.00000000000000E+0      0.00000000000000E+0
   BmNSMass                 4     271        1     3.00000000000000E+2
3.00000000000000E+2      0.00000000000000E+0      0.00000000000000E+0
0.00000000000000E+0      0.00000000000000E+0      1.00000000000000E+0
    0.00000000000000E+0      0.00000000000000E+0      0.00000000000000E+0
   BmNSMass                 4     272        1     3.00000000000000E+2
3.00000000000000E+2      0.00000000000000E+0      0.00000000000000E+0
0.00000000000000E+0      0.00000000000000E+0      1.00000000000000E+0
    0.00000000000000E+0      0.00000000000000E+0      0.00000000000000E+0
   BmNSMass                 4     273        1     3.00000000000000E+2
```

```
3.00000000000000E+2      0.00000000000000E+0      0.00000000000000E+0
0.00000000000000E+0      0.00000000000000E+0      1.00000000000000E+0
    0.00000000000000E+0      0.00000000000000E+0      0.00000000000000E+0
   BmNSMass                 4     274       1     3.00000000000000E+2
3.00000000000000E+2      0.00000000000000E+0      0.00000000000000E+0
0.00000000000000E+0      0.00000000000000E+0      1.00000000000000E+0
    0.00000000000000E+0      0.00000000000000E+0      0.00000000000000E+0
   BmNSMass                 4     275       1     3.00000000000000E+2
3.00000000000000E+2      0.00000000000000E+0      0.00000000000000E+0
0.00000000000000E+0      0.00000000000000E+0      1.00000000000000E+0
    0.00000000000000E+0      0.00000000000000E+0      0.00000000000000E+0
   BmNSMass                 4     276       1     3.00000000000000E+2
3.00000000000000E+2      0.00000000000000E+0      0.00000000000000E+0
0.00000000000000E+0      0.00000000000000E+0      1.00000000000000E+0
    0.00000000000000E+0      0.00000000000000E+0      0.00000000000000E+0
   BmNSMass                 4     277       1     3.00000000000000E+2
3.00000000000000E+2      0.00000000000000E+0      0.00000000000000E+0
0.00000000000000E+0      0.00000000000000E+0      1.00000000000000E+0
    0.00000000000000E+0      0.00000000000000E+0      0.00000000000000E+0
   BmNSMass                 4     278       1     3.00000000000000E+2
3.00000000000000E+2      0.00000000000000E+0      0.00000000000000E+0
0.00000000000000E+0      0.00000000000000E+0      1.00000000000000E+0
    0.00000000000000E+0      0.00000000000000E+0      0.00000000000000E+0
   BmNSMass                 4     279       1     3.00000000000000E+2
3.00000000000000E+2      0.00000000000000E+0      0.00000000000000E+0
0.00000000000000E+0      0.00000000000000E+0      1.00000000000000E+0
    0.00000000000000E+0      0.00000000000000E+0      0.00000000000000E+0
   BmNSMass                 4     280       1     3.00000000000000E+2
3.00000000000000E+2      0.00000000000000E+0      0.00000000000000E+0
0.00000000000000E+0      0.00000000000000E+0      1.00000000000000E+0
    0.00000000000000E+0      0.00000000000000E+0      0.00000000000000E+0
   BmNSMass                 4     281       1     3.00000000000000E+2
3.00000000000000E+2      0.00000000000000E+0      0.00000000000000E+0
0.00000000000000E+0      0.00000000000000E+0      1.00000000000000E+0
    0.00000000000000E+0      0.00000000000000E+0      0.00000000000000E+0
   BmNSMass                 4     282       1     3.00000000000000E+2
3.00000000000000E+2      0.00000000000000E+0      0.00000000000000E+0
0.00000000000000E+0      0.00000000000000E+0      1.00000000000000E+0
    0.00000000000000E+0      0.00000000000000E+0      0.00000000000000E+0
   BmNSMass                 4     283       1     3.00000000000000E+2
3.00000000000000E+2      0.00000000000000E+0      0.00000000000000E+0
0.00000000000000E+0      0.00000000000000E+0      1.00000000000000E+0
    0.00000000000000E+0      0.00000000000000E+0      0.00000000000000E+0
   BmNSMass                 4     284       1     3.00000000000000E+2
3.00000000000000E+2      0.00000000000000E+0      0.00000000000000E+0
0.00000000000000E+0      0.00000000000000E+0      1.00000000000000E+0
    0.00000000000000E+0      0.00000000000000E+0      0.00000000000000E+0
   BmNSMass                 4     285       1     3.00000000000000E+2
3.00000000000000E+2      0.00000000000000E+0      0.00000000000000E+0
0.00000000000000E+0      0.00000000000000E+0      1.00000000000000E+0
    0.00000000000000E+0      0.00000000000000E+0      0.00000000000000E+0
   BmNSMass                 4     286       1     3.00000000000000E+2
3.00000000000000E+2      0.00000000000000E+0      0.00000000000000E+0
0.00000000000000E+0      0.00000000000000E+0      1.00000000000000E+0
```

```
    0.00000000000000E+0      0.00000000000000E+0      0.00000000000000E+0
   BmNSMass                 4     287        1     3.00000000000000E+2
3.00000000000000E+2      0.00000000000000E+0      0.00000000000000E+0
0.00000000000000E+0      0.00000000000000E+0      1.00000000000000E+0
    0.00000000000000E+0      0.00000000000000E+0      0.00000000000000E+0
   BmNSMass                 4     288        1     3.00000000000000E+2
3.00000000000000E+2      0.00000000000000E+0      0.00000000000000E+0
0.00000000000000E+0      0.00000000000000E+0      1.00000000000000E+0
    0.00000000000000E+0      0.00000000000000E+0      0.00000000000000E+0
   BmNSMass                 4     289        1     3.00000000000000E+2
3.00000000000000E+2      0.00000000000000E+0      0.00000000000000E+0
0.00000000000000E+0      0.00000000000000E+0      1.00000000000000E+0
    0.00000000000000E+0      0.00000000000000E+0      0.00000000000000E+0
   BmNSMass                 4     290        1     3.00000000000000E+2
3.00000000000000E+2      0.00000000000000E+0      0.00000000000000E+0
0.00000000000000E+0      0.00000000000000E+0      1.00000000000000E+0
    0.00000000000000E+0      0.00000000000000E+0      0.00000000000000E+0
   BmNSMass                 4     291        1     3.00000000000000E+2
3.00000000000000E+2      0.00000000000000E+0      0.00000000000000E+0
0.00000000000000E+0      0.00000000000000E+0      1.00000000000000E+0
    0.00000000000000E+0      0.00000000000000E+0      0.00000000000000E+0
   BmNSMass                 4     292        1     3.00000000000000E+2
3.00000000000000E+2      0.00000000000000E+0      0.00000000000000E+0
0.00000000000000E+0      0.00000000000000E+0      1.00000000000000E+0
    0.00000000000000E+0      0.00000000000000E+0      0.00000000000000E+0
   BmNSMass                 4     293        1     3.00000000000000E+2
3.00000000000000E+2      0.00000000000000E+0      0.00000000000000E+0
0.00000000000000E+0      0.00000000000000E+0      1.00000000000000E+0
    0.00000000000000E+0      0.00000000000000E+0      0.00000000000000E+0
   BmNSMass                 4     294        1     3.00000000000000E+2
3.00000000000000E+2      0.00000000000000E+0      0.00000000000000E+0
0.00000000000000E+0      0.00000000000000E+0      1.00000000000000E+0
    0.00000000000000E+0      0.00000000000000E+0      0.00000000000000E+0
   BmNSMass                 4     295        1     3.00000000000000E+2
3.00000000000000E+2      0.00000000000000E+0      0.00000000000000E+0
0.00000000000000E+0      0.00000000000000E+0      1.00000000000000E+0
    0.00000000000000E+0      0.00000000000000E+0      0.00000000000000E+0
   BmNSMass                 4     296        1     3.00000000000000E+2
3.00000000000000E+2      0.00000000000000E+0      0.00000000000000E+0
0.00000000000000E+0      0.00000000000000E+0      1.00000000000000E+0
    0.00000000000000E+0      0.00000000000000E+0      0.00000000000000E+0
   BmNSMass                 4     297        1     3.00000000000000E+2
3.00000000000000E+2      0.00000000000000E+0      0.00000000000000E+0
0.00000000000000E+0      0.00000000000000E+0      1.00000000000000E+0
    0.00000000000000E+0      0.00000000000000E+0      0.00000000000000E+0
   BmNSMass                 4     298        1     3.00000000000000E+2
3.00000000000000E+2      0.00000000000000E+0      0.00000000000000E+0
0.00000000000000E+0      0.00000000000000E+0      1.00000000000000E+0
    0.00000000000000E+0      0.00000000000000E+0      0.00000000000000E+0
   BmNSMass                 4     299        1     3.00000000000000E+2
3.00000000000000E+2      0.00000000000000E+0      0.00000000000000E+0
0.00000000000000E+0      0.00000000000000E+0      1.00000000000000E+0
    0.00000000000000E+0      0.00000000000000E+0      0.00000000000000E+0
   BmNSMass                 4     300        1     3.00000000000000E+2
```

```
3.00000000000000E+2      0.00000000000000E+0      0.00000000000000E+0
0.00000000000000E+0      0.00000000000000E+0      1.00000000000000E+0
    0.00000000000000E+0      0.00000000000000E+0      0.00000000000000E+0
   BmNSMass                 4     301         1     3.00000000000000E+2
3.00000000000000E+2      0.00000000000000E+0      0.00000000000000E+0
0.00000000000000E+0      0.00000000000000E+0      1.00000000000000E+0
    0.00000000000000E+0      0.00000000000000E+0      0.00000000000000E+0
   BmNSMass                 4     302         1     3.00000000000000E+2
3.00000000000000E+2      0.00000000000000E+0      0.00000000000000E+0
0.00000000000000E+0      0.00000000000000E+0      1.00000000000000E+0
    0.00000000000000E+0      0.00000000000000E+0      0.00000000000000E+0
   BmNSMass                 4     303         1     3.00000000000000E+2
3.00000000000000E+2      0.00000000000000E+0      0.00000000000000E+0
0.00000000000000E+0      0.00000000000000E+0      1.00000000000000E+0
    0.00000000000000E+0      0.00000000000000E+0      0.00000000000000E+0
   BmNSMass                 4     304         1     3.00000000000000E+2
3.00000000000000E+2      0.00000000000000E+0      0.00000000000000E+0
0.00000000000000E+0      0.00000000000000E+0      1.00000000000000E+0
    0.00000000000000E+0      0.00000000000000E+0      0.00000000000000E+0
   BmNSMass                 4     305         1     3.00000000000000E+2
3.00000000000000E+2      0.00000000000000E+0      0.00000000000000E+0
0.00000000000000E+0      0.00000000000000E+0      1.00000000000000E+0
    0.00000000000000E+0      0.00000000000000E+0      0.00000000000000E+0
   BmNSMass                 4     306         1     3.00000000000000E+2
3.00000000000000E+2      0.00000000000000E+0      0.00000000000000E+0
0.00000000000000E+0      0.00000000000000E+0      1.00000000000000E+0
    0.00000000000000E+0      0.00000000000000E+0      0.00000000000000E+0
   BmNSMass                 4     307         1     3.00000000000000E+2
3.00000000000000E+2      0.00000000000000E+0      0.00000000000000E+0
0.00000000000000E+0      0.00000000000000E+0      1.00000000000000E+0
    0.00000000000000E+0      0.00000000000000E+0      0.00000000000000E+0
   BmNSMass                 4     308         1     3.00000000000000E+2
3.00000000000000E+2      0.00000000000000E+0      0.00000000000000E+0
0.00000000000000E+0      0.00000000000000E+0      1.00000000000000E+0
    0.00000000000000E+0      0.00000000000000E+0      0.00000000000000E+0
   BmNSMass                 4     309         1     3.00000000000000E+2
3.00000000000000E+2      0.00000000000000E+0      0.00000000000000E+0
0.00000000000000E+0      0.00000000000000E+0      1.00000000000000E+0
    0.00000000000000E+0      0.00000000000000E+0      0.00000000000000E+0
   BmNSMass                 4     310         1     3.00000000000000E+2
3.00000000000000E+2      0.00000000000000E+0      0.00000000000000E+0
0.00000000000000E+0      0.00000000000000E+0      1.00000000000000E+0
    0.00000000000000E+0      0.00000000000000E+0      0.00000000000000E+0
   BmNSMass                 4     311         1     3.00000000000000E+2
3.00000000000000E+2      0.00000000000000E+0      0.00000000000000E+0
0.00000000000000E+0      0.00000000000000E+0      1.00000000000000E+0
    0.00000000000000E+0      0.00000000000000E+0      0.00000000000000E+0
   BmNSMass                 4     312         1     3.00000000000000E+2
3.00000000000000E+2      0.00000000000000E+0      0.00000000000000E+0
0.00000000000000E+0      0.00000000000000E+0      1.00000000000000E+0
    0.00000000000000E+0      0.00000000000000E+0      0.00000000000000E+0
   BmNSMass                 4     313         1     3.00000000000000E+2
3.00000000000000E+2      0.00000000000000E+0      0.00000000000000E+0
0.00000000000000E+0      0.00000000000000E+0      1.00000000000000E+0
```

```
    0.00000000000000E+0      0.00000000000000E+0      0.00000000000000E+0
   BmNSMass                    4     314        1     3.00000000000000E+2
3.00000000000000E+2      0.00000000000000E+0      0.00000000000000E+0
0.00000000000000E+0      0.00000000000000E+0      1.00000000000000E+0
    0.00000000000000E+0      0.00000000000000E+0      0.00000000000000E+0
   BmNSMass                    4     315        1     3.00000000000000E+2
3.00000000000000E+2      0.00000000000000E+0      0.00000000000000E+0
0.00000000000000E+0      0.00000000000000E+0      1.00000000000000E+0
    0.00000000000000E+0      0.00000000000000E+0      0.00000000000000E+0
   BmNSMass                    4     316        1     3.00000000000000E+2
3.00000000000000E+2      0.00000000000000E+0      0.00000000000000E+0
0.00000000000000E+0      0.00000000000000E+0      1.00000000000000E+0
    0.00000000000000E+0      0.00000000000000E+0      0.00000000000000E+0
   BmNSMass                    4     317        1     3.00000000000000E+2
3.00000000000000E+2      0.00000000000000E+0      0.00000000000000E+0
0.00000000000000E+0      0.00000000000000E+0      1.00000000000000E+0
    0.00000000000000E+0      0.00000000000000E+0      0.00000000000000E+0
   BmNSMass                    4     318        1     3.00000000000000E+2
3.00000000000000E+2      0.00000000000000E+0      0.00000000000000E+0
0.00000000000000E+0      0.00000000000000E+0      1.00000000000000E+0
    0.00000000000000E+0      0.00000000000000E+0      0.00000000000000E+0
   BmNSMass                    4     319        1     3.00000000000000E+2
3.00000000000000E+2      0.00000000000000E+0      0.00000000000000E+0
0.00000000000000E+0      0.00000000000000E+0      1.00000000000000E+0
    0.00000000000000E+0      0.00000000000000E+0      0.00000000000000E+0
   BmNSMass                    4     320        1     3.00000000000000E+2
3.00000000000000E+2      0.00000000000000E+0      0.00000000000000E+0
0.00000000000000E+0      0.00000000000000E+0      1.00000000000000E+0
    0.00000000000000E+0      0.00000000000000E+0      0.00000000000000E+0
   BmNSMass                    4     321        1     3.00000000000000E+2
3.00000000000000E+2      0.00000000000000E+0      0.00000000000000E+0
0.00000000000000E+0      0.00000000000000E+0      1.00000000000000E+0
    0.00000000000000E+0      0.00000000000000E+0      0.00000000000000E+0
   BmNSMass                    4     322        1     3.00000000000000E+2
3.00000000000000E+2      0.00000000000000E+0      0.00000000000000E+0
0.00000000000000E+0      0.00000000000000E+0      1.00000000000000E+0
    0.00000000000000E+0      0.00000000000000E+0      0.00000000000000E+0
   BmNSMass                    4     323        1     3.00000000000000E+2
3.00000000000000E+2      0.00000000000000E+0      0.00000000000000E+0
0.00000000000000E+0      0.00000000000000E+0      1.00000000000000E+0
    0.00000000000000E+0      0.00000000000000E+0      0.00000000000000E+0
   BmNSMass                    4     324        1     3.00000000000000E+2
3.00000000000000E+2      0.00000000000000E+0      0.00000000000000E+0
0.00000000000000E+0      0.00000000000000E+0      1.00000000000000E+0
    0.00000000000000E+0      0.00000000000000E+0      0.00000000000000E+0
   BmNSMass                    4     325        1     3.00000000000000E+2
3.00000000000000E+2      0.00000000000000E+0      0.00000000000000E+0
0.00000000000000E+0      0.00000000000000E+0      1.00000000000000E+0
    0.00000000000000E+0      0.00000000000000E+0      0.00000000000000E+0
   BmNSMass                    4     326        1     3.00000000000000E+2
3.00000000000000E+2      0.00000000000000E+0      0.00000000000000E+0
0.00000000000000E+0      0.00000000000000E+0      1.00000000000000E+0
    0.00000000000000E+0      0.00000000000000E+0      0.00000000000000E+0
   BmNSMass                    4     327        1     3.00000000000000E+2
```

```
3.00000000000000E+2      0.00000000000000E+0      0.00000000000000E+0
0.00000000000000E+0      0.00000000000000E+0      1.00000000000000E+0
    0.00000000000000E+0      0.00000000000000E+0      0.00000000000000E+0
   BmNSMass                 4     328         1     3.00000000000000E+2
3.00000000000000E+2      0.00000000000000E+0      0.00000000000000E+0
0.00000000000000E+0      0.00000000000000E+0      1.00000000000000E+0
    0.00000000000000E+0      0.00000000000000E+0      0.00000000000000E+0
   BmNSMass                 4     329         1     3.00000000000000E+2
3.00000000000000E+2      0.00000000000000E+0      0.00000000000000E+0
0.00000000000000E+0      0.00000000000000E+0      1.00000000000000E+0
    0.00000000000000E+0      0.00000000000000E+0      0.00000000000000E+0
   BmNSMass                 4     330         1     3.00000000000000E+2
3.00000000000000E+2      0.00000000000000E+0      0.00000000000000E+0
0.00000000000000E+0      0.00000000000000E+0      1.00000000000000E+0
    0.00000000000000E+0      0.00000000000000E+0      0.00000000000000E+0
   BmNSMass                 4     331         1     3.00000000000000E+2
3.00000000000000E+2      0.00000000000000E+0      0.00000000000000E+0
0.00000000000000E+0      0.00000000000000E+0      1.00000000000000E+0
    0.00000000000000E+0      0.00000000000000E+0      0.00000000000000E+0
   BmNSMass                 4     332         1     3.00000000000000E+2
3.00000000000000E+2      0.00000000000000E+0      0.00000000000000E+0
0.00000000000000E+0      0.00000000000000E+0      1.00000000000000E+0
    0.00000000000000E+0      0.00000000000000E+0      0.00000000000000E+0
   BmNSMass                 4     333         1     3.00000000000000E+2
3.00000000000000E+2      0.00000000000000E+0      0.00000000000000E+0
0.00000000000000E+0      0.00000000000000E+0      1.00000000000000E+0
    0.00000000000000E+0      0.00000000000000E+0      0.00000000000000E+0
   BmNSMass                 4     334         1     3.00000000000000E+2
3.00000000000000E+2      0.00000000000000E+0      0.00000000000000E+0
0.00000000000000E+0      0.00000000000000E+0      1.00000000000000E+0
    0.00000000000000E+0      0.00000000000000E+0      0.00000000000000E+0
   BmNSMass                 4     335         1     3.00000000000000E+2
3.00000000000000E+2      0.00000000000000E+0      0.00000000000000E+0
0.00000000000000E+0      0.00000000000000E+0      1.00000000000000E+0
    0.00000000000000E+0      0.00000000000000E+0      0.00000000000000E+0
   BmNSMass                 4     336         1     3.00000000000000E+2
3.00000000000000E+2      0.00000000000000E+0      0.00000000000000E+0
0.00000000000000E+0      0.00000000000000E+0      1.00000000000000E+0
    0.00000000000000E+0      0.00000000000000E+0      0.00000000000000E+0
   BmNSMass                 4     337         1     3.00000000000000E+2
3.00000000000000E+2      0.00000000000000E+0      0.00000000000000E+0
0.00000000000000E+0      0.00000000000000E+0      1.00000000000000E+0
    0.00000000000000E+0      0.00000000000000E+0      0.00000000000000E+0
   BmNSMass                 4     338         1     3.00000000000000E+2
3.00000000000000E+2      0.00000000000000E+0      0.00000000000000E+0
0.00000000000000E+0      0.00000000000000E+0      1.00000000000000E+0
    0.00000000000000E+0      0.00000000000000E+0      0.00000000000000E+0
   BmNSMass                 4     339         1     3.00000000000000E+2
3.00000000000000E+2      0.00000000000000E+0      0.00000000000000E+0
0.00000000000000E+0      0.00000000000000E+0      1.00000000000000E+0
    0.00000000000000E+0      0.00000000000000E+0      0.00000000000000E+0
   BmNSMass                 4     340         1     3.00000000000000E+2
3.00000000000000E+2      0.00000000000000E+0      0.00000000000000E+0
0.00000000000000E+0      0.00000000000000E+0      1.00000000000000E+0
```

```
    0.00000000000000E+0      0.00000000000000E+0      0.00000000000000E+0
   BmNSMass                 4      341        1      3.00000000000000E+2
3.00000000000000E+2      0.00000000000000E+0      0.00000000000000E+0
0.00000000000000E+0      0.00000000000000E+0      1.00000000000000E+0
    0.00000000000000E+0      0.00000000000000E+0      0.00000000000000E+0
   BmNSMass                 4      342        1      3.00000000000000E+2
3.00000000000000E+2      0.00000000000000E+0      0.00000000000000E+0
0.00000000000000E+0      0.00000000000000E+0      1.00000000000000E+0
    0.00000000000000E+0      0.00000000000000E+0      0.00000000000000E+0
   BmNSMass                 4      343        1      3.00000000000000E+2
3.00000000000000E+2      0.00000000000000E+0      0.00000000000000E+0
0.00000000000000E+0      0.00000000000000E+0      1.00000000000000E+0
    0.00000000000000E+0      0.00000000000000E+0      0.00000000000000E+0
   BmNSMass                 4      344        1      3.00000000000000E+2
3.00000000000000E+2      0.00000000000000E+0      0.00000000000000E+0
0.00000000000000E+0      0.00000000000000E+0      1.00000000000000E+0
    0.00000000000000E+0      0.00000000000000E+0      0.00000000000000E+0
   BmNSMass                 4      345        1      3.00000000000000E+2
3.00000000000000E+2      0.00000000000000E+0      0.00000000000000E+0
0.00000000000000E+0      0.00000000000000E+0      1.00000000000000E+0
    0.00000000000000E+0      0.00000000000000E+0      0.00000000000000E+0
   BmNSMass                 4      346        1      3.00000000000000E+2
3.00000000000000E+2      0.00000000000000E+0      0.00000000000000E+0
0.00000000000000E+0      0.00000000000000E+0      1.00000000000000E+0
    0.00000000000000E+0      0.00000000000000E+0      0.00000000000000E+0
   BmNSMass                 4      347        1      3.00000000000000E+2
3.00000000000000E+2      0.00000000000000E+0      0.00000000000000E+0
0.00000000000000E+0      0.00000000000000E+0      1.00000000000000E+0
    0.00000000000000E+0      0.00000000000000E+0      0.00000000000000E+0
   BmNSMass                 4      348        1      3.00000000000000E+2
3.00000000000000E+2      0.00000000000000E+0      0.00000000000000E+0
0.00000000000000E+0      0.00000000000000E+0      1.00000000000000E+0
    0.00000000000000E+0      0.00000000000000E+0      0.00000000000000E+0
   BmNSMass                 4      349        1      3.00000000000000E+2
3.00000000000000E+2      0.00000000000000E+0      0.00000000000000E+0
0.00000000000000E+0      0.00000000000000E+0      1.00000000000000E+0
    0.00000000000000E+0      0.00000000000000E+0      0.00000000000000E+0
   BmNSMass                 4      350        1      3.00000000000000E+2
3.00000000000000E+2      0.00000000000000E+0      0.00000000000000E+0
0.00000000000000E+0      0.00000000000000E+0      1.00000000000000E+0
    0.00000000000000E+0      0.00000000000000E+0      0.00000000000000E+0
   BmNSMass                 4      351        1      3.00000000000000E+2
3.00000000000000E+2      0.00000000000000E+0      0.00000000000000E+0
0.00000000000000E+0      0.00000000000000E+0      1.00000000000000E+0
    0.00000000000000E+0      0.00000000000000E+0      0.00000000000000E+0
   BmNSMass                 4      352        1      3.00000000000000E+2
3.00000000000000E+2      0.00000000000000E+0      0.00000000000000E+0
0.00000000000000E+0      0.00000000000000E+0      1.00000000000000E+0
    0.00000000000000E+0      0.00000000000000E+0      0.00000000000000E+0
   BmNSMass                 4      353        1      3.00000000000000E+2
3.00000000000000E+2      0.00000000000000E+0      0.00000000000000E+0
0.00000000000000E+0      0.00000000000000E+0      1.00000000000000E+0
    0.00000000000000E+0      0.00000000000000E+0      0.00000000000000E+0
   BmNSMass                 4      354        1      3.00000000000000E+2
```

```
3.00000000000000E+2      0.00000000000000E+0      0.00000000000000E+0
0.00000000000000E+0      0.00000000000000E+0      1.00000000000000E+0
    0.00000000000000E+0      0.00000000000000E+0      0.00000000000000E+0
   BmNSMass                 4     355         1     3.00000000000000E+2
3.00000000000000E+2      0.00000000000000E+0      0.00000000000000E+0
0.00000000000000E+0      0.00000000000000E+0      1.00000000000000E+0
    0.00000000000000E+0      0.00000000000000E+0      0.00000000000000E+0
   BmNSMass                 4     356         1     3.00000000000000E+2
3.00000000000000E+2      0.00000000000000E+0      0.00000000000000E+0
0.00000000000000E+0      0.00000000000000E+0      1.00000000000000E+0
    0.00000000000000E+0      0.00000000000000E+0      0.00000000000000E+0
   BmNSMass                 4     357         1     3.00000000000000E+2
3.00000000000000E+2      0.00000000000000E+0      0.00000000000000E+0
0.00000000000000E+0      0.00000000000000E+0      1.00000000000000E+0
    0.00000000000000E+0      0.00000000000000E+0      0.00000000000000E+0
   BmNSMass                 4     358         1     3.00000000000000E+2
3.00000000000000E+2      0.00000000000000E+0      0.00000000000000E+0
0.00000000000000E+0      0.00000000000000E+0      1.00000000000000E+0
    0.00000000000000E+0      0.00000000000000E+0      0.00000000000000E+0
   BmNSMass                 4     359         1     3.00000000000000E+2
3.00000000000000E+2      0.00000000000000E+0      0.00000000000000E+0
0.00000000000000E+0      0.00000000000000E+0      1.00000000000000E+0
    0.00000000000000E+0      0.00000000000000E+0      0.00000000000000E+0
   BmNSMass                 4     360         1     3.00000000000000E+2
3.00000000000000E+2      0.00000000000000E+0      0.00000000000000E+0
0.00000000000000E+0      0.00000000000000E+0      1.00000000000000E+0
    0.00000000000000E+0      0.00000000000000E+0      0.00000000000000E+0
   BmNSMass                 4     361         1     3.00000000000000E+2
3.00000000000000E+2      0.00000000000000E+0      0.00000000000000E+0
0.00000000000000E+0      0.00000000000000E+0      1.00000000000000E+0
    0.00000000000000E+0      0.00000000000000E+0      0.00000000000000E+0
   BmNSMass                 4     362         1     3.00000000000000E+2
3.00000000000000E+2      0.00000000000000E+0      0.00000000000000E+0
0.00000000000000E+0      0.00000000000000E+0      1.00000000000000E+0
    0.00000000000000E+0      0.00000000000000E+0      0.00000000000000E+0
   BmNSMass                 4     363         1     3.00000000000000E+2
3.00000000000000E+2      0.00000000000000E+0      0.00000000000000E+0
0.00000000000000E+0      0.00000000000000E+0      1.00000000000000E+0
    0.00000000000000E+0      0.00000000000000E+0      0.00000000000000E+0
   BmNSMass                 4     364         1     3.00000000000000E+2
3.00000000000000E+2      0.00000000000000E+0      0.00000000000000E+0
0.00000000000000E+0      0.00000000000000E+0      1.00000000000000E+0
    0.00000000000000E+0      0.00000000000000E+0      0.00000000000000E+0
   BmNSMass                 4     365         1     3.00000000000000E+2
3.00000000000000E+2      0.00000000000000E+0      0.00000000000000E+0
0.00000000000000E+0      0.00000000000000E+0      1.00000000000000E+0
    0.00000000000000E+0      0.00000000000000E+0      0.00000000000000E+0
   BmNSMass                 4     366         1     3.00000000000000E+2
3.00000000000000E+2      0.00000000000000E+0      0.00000000000000E+0
0.00000000000000E+0      0.00000000000000E+0      1.00000000000000E+0
    0.00000000000000E+0      0.00000000000000E+0      0.00000000000000E+0
   BmNSMass                 4     367         1     3.00000000000000E+2
3.00000000000000E+2      0.00000000000000E+0      0.00000000000000E+0
0.00000000000000E+0      0.00000000000000E+0      1.00000000000000E+0
```

```
    0.00000000000000E+0      0.00000000000000E+0      0.00000000000000E+0
   BmNSMass                 4     368        1     3.00000000000000E+2
3.00000000000000E+2      0.00000000000000E+0      0.00000000000000E+0
0.00000000000000E+0      0.00000000000000E+0      1.00000000000000E+0
    0.00000000000000E+0      0.00000000000000E+0      0.00000000000000E+0
   BmNSMass                 4     369        1     3.00000000000000E+2
3.00000000000000E+2      0.00000000000000E+0      0.00000000000000E+0
0.00000000000000E+0      0.00000000000000E+0      1.00000000000000E+0
    0.00000000000000E+0      0.00000000000000E+0      0.00000000000000E+0
   BmNSMass                 4     370        1     3.00000000000000E+2
3.00000000000000E+2      0.00000000000000E+0      0.00000000000000E+0
0.00000000000000E+0      0.00000000000000E+0      1.00000000000000E+0
    0.00000000000000E+0      0.00000000000000E+0      0.00000000000000E+0
   BmNSMass                 4     371        1     3.00000000000000E+2
3.00000000000000E+2      0.00000000000000E+0      0.00000000000000E+0
0.00000000000000E+0      0.00000000000000E+0      1.00000000000000E+0
    0.00000000000000E+0      0.00000000000000E+0      0.00000000000000E+0
   BmNSMass                 4     372        1     3.00000000000000E+2
3.00000000000000E+2      0.00000000000000E+0      0.00000000000000E+0
0.00000000000000E+0      0.00000000000000E+0      1.00000000000000E+0
    0.00000000000000E+0      0.00000000000000E+0      0.00000000000000E+0
   BmNSMass                 4     373        1     3.00000000000000E+2
3.00000000000000E+2      0.00000000000000E+0      0.00000000000000E+0
0.00000000000000E+0      0.00000000000000E+0      1.00000000000000E+0
    0.00000000000000E+0      0.00000000000000E+0      0.00000000000000E+0
   BmNSMass                 4     374        1     3.00000000000000E+2
3.00000000000000E+2      0.00000000000000E+0      0.00000000000000E+0
0.00000000000000E+0      0.00000000000000E+0      1.00000000000000E+0
    0.00000000000000E+0      0.00000000000000E+0      0.00000000000000E+0
   BmNSMass                 4     375        1     3.00000000000000E+2
3.00000000000000E+2      0.00000000000000E+0      0.00000000000000E+0
0.00000000000000E+0      0.00000000000000E+0      1.00000000000000E+0
    0.00000000000000E+0      0.00000000000000E+0      0.00000000000000E+0
   BmNSMass                 4     376        1     3.00000000000000E+2
3.00000000000000E+2      0.00000000000000E+0      0.00000000000000E+0
0.00000000000000E+0      0.00000000000000E+0      1.00000000000000E+0
    0.00000000000000E+0      0.00000000000000E+0      0.00000000000000E+0
   BmNSMass                 4     377        1     3.00000000000000E+2
3.00000000000000E+2      0.00000000000000E+0      0.00000000000000E+0
0.00000000000000E+0      0.00000000000000E+0      1.00000000000000E+0
    0.00000000000000E+0      0.00000000000000E+0      0.00000000000000E+0
   BmNSMass                 4     378        1     3.00000000000000E+2
3.00000000000000E+2      0.00000000000000E+0      0.00000000000000E+0
0.00000000000000E+0      0.00000000000000E+0      1.00000000000000E+0
    0.00000000000000E+0      0.00000000000000E+0      0.00000000000000E+0
   BmNSMass                 4     379        1     3.00000000000000E+2
3.00000000000000E+2      0.00000000000000E+0      0.00000000000000E+0
0.00000000000000E+0      0.00000000000000E+0      1.00000000000000E+0
    0.00000000000000E+0      0.00000000000000E+0      0.00000000000000E+0
   BmNSMass                 4     380        1     3.00000000000000E+2
3.00000000000000E+2      0.00000000000000E+0      0.00000000000000E+0
0.00000000000000E+0      0.00000000000000E+0      1.00000000000000E+0
    0.00000000000000E+0      0.00000000000000E+0      0.00000000000000E+0
   BmNSMass                 4     381        1     3.00000000000000E+2
```

```
3.00000000000000E+2      0.00000000000000E+0      0.00000000000000E+0
0.00000000000000E+0      0.00000000000000E+0      1.00000000000000E+0
    0.00000000000000E+0      0.00000000000000E+0      0.00000000000000E+0
   BmNSMass                 4     382       1     3.00000000000000E+2
3.00000000000000E+2      0.00000000000000E+0      0.00000000000000E+0
0.00000000000000E+0      0.00000000000000E+0      1.00000000000000E+0
    0.00000000000000E+0      0.00000000000000E+0      0.00000000000000E+0
   BmNSMass                 4     383       1     3.00000000000000E+2
3.00000000000000E+2      0.00000000000000E+0      0.00000000000000E+0
0.00000000000000E+0      0.00000000000000E+0      1.00000000000000E+0
    0.00000000000000E+0      0.00000000000000E+0      0.00000000000000E+0
   BmNSMass                 4     384       1     3.00000000000000E+2
3.00000000000000E+2      0.00000000000000E+0      0.00000000000000E+0
0.00000000000000E+0      0.00000000000000E+0      1.00000000000000E+0
    0.00000000000000E+0      0.00000000000000E+0      0.00000000000000E+0
   BmNSMass                 4     385       1     3.00000000000000E+2
3.00000000000000E+2      0.00000000000000E+0      0.00000000000000E+0
0.00000000000000E+0      0.00000000000000E+0      1.00000000000000E+0
    0.00000000000000E+0      0.00000000000000E+0      0.00000000000000E+0
   BmNSMass                 4     386       1     3.00000000000000E+2
3.00000000000000E+2      0.00000000000000E+0      0.00000000000000E+0
0.00000000000000E+0      0.00000000000000E+0      1.00000000000000E+0
    0.00000000000000E+0      0.00000000000000E+0      0.00000000000000E+0
   BmNSMass                 4     387       1     3.00000000000000E+2
3.00000000000000E+2      0.00000000000000E+0      0.00000000000000E+0
0.00000000000000E+0      0.00000000000000E+0      1.00000000000000E+0
    0.00000000000000E+0      0.00000000000000E+0      0.00000000000000E+0
   BmNSMass                 4     388       1     3.00000000000000E+2
3.00000000000000E+2      0.00000000000000E+0      0.00000000000000E+0
0.00000000000000E+0      0.00000000000000E+0      1.00000000000000E+0
    0.00000000000000E+0      0.00000000000000E+0      0.00000000000000E+0
   BmNSMass                 4     389       1     3.00000000000000E+2
3.00000000000000E+2      0.00000000000000E+0      0.00000000000000E+0
0.00000000000000E+0      0.00000000000000E+0      1.00000000000000E+0
    0.00000000000000E+0      0.00000000000000E+0      0.00000000000000E+0
   BmNSMass                 4     390       1     3.00000000000000E+2
3.00000000000000E+2      0.00000000000000E+0      0.00000000000000E+0
0.00000000000000E+0      0.00000000000000E+0      1.00000000000000E+0
    0.00000000000000E+0      0.00000000000000E+0      0.00000000000000E+0
   BmNSMass                 4     391       1     3.00000000000000E+2
3.00000000000000E+2      0.00000000000000E+0      0.00000000000000E+0
0.00000000000000E+0      0.00000000000000E+0      1.00000000000000E+0
    0.00000000000000E+0      0.00000000000000E+0      0.00000000000000E+0
   BmNSMass                 4     392       1     3.00000000000000E+2
3.00000000000000E+2      0.00000000000000E+0      0.00000000000000E+0
0.00000000000000E+0      0.00000000000000E+0      1.00000000000000E+0
    0.00000000000000E+0      0.00000000000000E+0      0.00000000000000E+0
   BmNSMass                 4     393       1     3.00000000000000E+2
3.00000000000000E+2      0.00000000000000E+0      0.00000000000000E+0
0.00000000000000E+0      0.00000000000000E+0      1.00000000000000E+0
    0.00000000000000E+0      0.00000000000000E+0      0.00000000000000E+0
   BmNSMass                 4     394       1     3.00000000000000E+2
3.00000000000000E+2      0.00000000000000E+0      0.00000000000000E+0
0.00000000000000E+0      0.00000000000000E+0      1.00000000000000E+0
```

```
    0.00000000000000E+0      0.00000000000000E+0      0.00000000000000E+0
   BmNSMass                 4     395         1     3.00000000000000E+2
3.00000000000000E+2      0.00000000000000E+0      0.00000000000000E+0
0.00000000000000E+0      0.00000000000000E+0      1.00000000000000E+0
    0.00000000000000E+0      0.00000000000000E+0      0.00000000000000E+0
   BmNSMass                 4     396         1     3.00000000000000E+2
3.00000000000000E+2      0.00000000000000E+0      0.00000000000000E+0
0.00000000000000E+0      0.00000000000000E+0      1.00000000000000E+0
    0.00000000000000E+0      0.00000000000000E+0      0.00000000000000E+0
   BmNSMass                 4     397         1     3.00000000000000E+2
3.00000000000000E+2      0.00000000000000E+0      0.00000000000000E+0
0.00000000000000E+0      0.00000000000000E+0      1.00000000000000E+0
    0.00000000000000E+0      0.00000000000000E+0      0.00000000000000E+0
   BmNSMass                 4     398         1     3.00000000000000E+2
3.00000000000000E+2      0.00000000000000E+0      0.00000000000000E+0
0.00000000000000E+0      0.00000000000000E+0      1.00000000000000E+0
    0.00000000000000E+0      0.00000000000000E+0      0.00000000000000E+0
   BmNSMass                 4     399         1     3.00000000000000E+2
3.00000000000000E+2      0.00000000000000E+0      0.00000000000000E+0
0.00000000000000E+0      0.00000000000000E+0      1.00000000000000E+0
    0.00000000000000E+0      0.00000000000000E+0      0.00000000000000E+0
   BmNSMass                 4     400         1     3.00000000000000E+2
3.00000000000000E+2      0.00000000000000E+0      0.00000000000000E+0
0.00000000000000E+0      0.00000000000000E+0      1.00000000000000E+0
    0.00000000000000E+0      0.00000000000000E+0      0.00000000000000E+0
   BmNSMass                 4     401         1     3.00000000000000E+2
3.00000000000000E+2      0.00000000000000E+0      0.00000000000000E+0
0.00000000000000E+0      0.00000000000000E+0      1.00000000000000E+0
    0.00000000000000E+0      0.00000000000000E+0      0.00000000000000E+0
   BmNSMass                 4     402         1     3.00000000000000E+2
3.00000000000000E+2      0.00000000000000E+0      0.00000000000000E+0
0.00000000000000E+0      0.00000000000000E+0      1.00000000000000E+0
    0.00000000000000E+0      0.00000000000000E+0      0.00000000000000E+0
   BmNSMass                 4     403         1     3.00000000000000E+2
3.00000000000000E+2      0.00000000000000E+0      0.00000000000000E+0
0.00000000000000E+0      0.00000000000000E+0      1.00000000000000E+0
    0.00000000000000E+0      0.00000000000000E+0      0.00000000000000E+0
   BmNSMass                 4     404         1     3.00000000000000E+2
3.00000000000000E+2      0.00000000000000E+0      0.00000000000000E+0
0.00000000000000E+0      0.00000000000000E+0      1.00000000000000E+0
    0.00000000000000E+0      0.00000000000000E+0      0.00000000000000E+0
   BmNSMass                 4     405         1     3.00000000000000E+2
3.00000000000000E+2      0.00000000000000E+0      0.00000000000000E+0
0.00000000000000E+0      0.00000000000000E+0      1.00000000000000E+0
    0.00000000000000E+0      0.00000000000000E+0      0.00000000000000E+0
   BmNSMass                 4     406         1     3.00000000000000E+2
3.00000000000000E+2      0.00000000000000E+0      0.00000000000000E+0
0.00000000000000E+0      0.00000000000000E+0      1.00000000000000E+0
    0.00000000000000E+0      0.00000000000000E+0      0.00000000000000E+0
   BmNSMass                 4     407         1     3.00000000000000E+2
3.00000000000000E+2      0.00000000000000E+0      0.00000000000000E+0
0.00000000000000E+0      0.00000000000000E+0      1.00000000000000E+0
    0.00000000000000E+0      0.00000000000000E+0      0.00000000000000E+0
   BmNSMass                 4     408         1     3.00000000000000E+2
```

```
3.00000000000000E+2      0.00000000000000E+0      0.00000000000000E+0
0.00000000000000E+0      0.00000000000000E+0      1.00000000000000E+0
    0.00000000000000E+0      0.00000000000000E+0      0.00000000000000E+0
   BmNSMass                4     409        1     3.00000000000000E+2
3.00000000000000E+2      0.00000000000000E+0      0.00000000000000E+0
0.00000000000000E+0      0.00000000000000E+0      1.00000000000000E+0
    0.00000000000000E+0      0.00000000000000E+0      0.00000000000000E+0
   BmNSMass                4     410        1     3.00000000000000E+2
3.00000000000000E+2      0.00000000000000E+0      0.00000000000000E+0
0.00000000000000E+0      0.00000000000000E+0      1.00000000000000E+0
    0.00000000000000E+0      0.00000000000000E+0      0.00000000000000E+0
   BmNSMass                4     411        1     3.00000000000000E+2
3.00000000000000E+2      0.00000000000000E+0      0.00000000000000E+0
0.00000000000000E+0      0.00000000000000E+0      1.00000000000000E+0
    0.00000000000000E+0      0.00000000000000E+0      0.00000000000000E+0
   BmNSMass                4     412        1     3.00000000000000E+2
3.00000000000000E+2      0.00000000000000E+0      0.00000000000000E+0
0.00000000000000E+0      0.00000000000000E+0      1.00000000000000E+0
    0.00000000000000E+0      0.00000000000000E+0      0.00000000000000E+0
   BmNSMass                4     413        1     3.00000000000000E+2
3.00000000000000E+2      0.00000000000000E+0      0.00000000000000E+0
0.00000000000000E+0      0.00000000000000E+0      1.00000000000000E+0
    0.00000000000000E+0      0.00000000000000E+0      0.00000000000000E+0
   BmNSMass                4     414        1     3.00000000000000E+2
3.00000000000000E+2      0.00000000000000E+0      0.00000000000000E+0
0.00000000000000E+0      0.00000000000000E+0      1.00000000000000E+0
    0.00000000000000E+0      0.00000000000000E+0      0.00000000000000E+0
   BmNSMass                4     415        1     3.00000000000000E+2
3.00000000000000E+2      0.00000000000000E+0      0.00000000000000E+0
0.00000000000000E+0      0.00000000000000E+0      1.00000000000000E+0
    0.00000000000000E+0      0.00000000000000E+0      0.00000000000000E+0
   BmNSMass                4     416        1     3.00000000000000E+2
3.00000000000000E+2      0.00000000000000E+0      0.00000000000000E+0
0.00000000000000E+0      0.00000000000000E+0      1.00000000000000E+0
    0.00000000000000E+0      0.00000000000000E+0      0.00000000000000E+0
   BmNSMass                4     417        1     3.00000000000000E+2
3.00000000000000E+2      0.00000000000000E+0      0.00000000000000E+0
0.00000000000000E+0      0.00000000000000E+0      1.00000000000000E+0
    0.00000000000000E+0      0.00000000000000E+0      0.00000000000000E+0
   BmNSMass                4     418        1     3.00000000000000E+2
3.00000000000000E+2      0.00000000000000E+0      0.00000000000000E+0
0.00000000000000E+0      0.00000000000000E+0      1.00000000000000E+0
    0.00000000000000E+0      0.00000000000000E+0      0.00000000000000E+0
   BmNSMass                4     419        1     3.00000000000000E+2
3.00000000000000E+2      0.00000000000000E+0      0.00000000000000E+0
0.00000000000000E+0      0.00000000000000E+0      1.00000000000000E+0
    0.00000000000000E+0      0.00000000000000E+0      0.00000000000000E+0
   BmNSMass                4     420        1     3.00000000000000E+2
3.00000000000000E+2      0.00000000000000E+0      0.00000000000000E+0
0.00000000000000E+0      0.00000000000000E+0      1.00000000000000E+0
    0.00000000000000E+0      0.00000000000000E+0      0.00000000000000E+0
   BmNSMass                4     421        1     3.00000000000000E+2
3.00000000000000E+2      0.00000000000000E+0      0.00000000000000E+0
0.00000000000000E+0      0.00000000000000E+0      1.00000000000000E+0
```

```
    0.00000000000000E+0      0.00000000000000E+0      0.00000000000000E+0
   BmNSMass                 4     422       1     3.00000000000000E+2
3.00000000000000E+2      0.00000000000000E+0      0.00000000000000E+0
0.00000000000000E+0      0.00000000000000E+0      1.00000000000000E+0
    0.00000000000000E+0      0.00000000000000E+0      0.00000000000000E+0
   BmNSMass                 4     423       1     3.00000000000000E+2
3.00000000000000E+2      0.00000000000000E+0      0.00000000000000E+0
0.00000000000000E+0      0.00000000000000E+0      1.00000000000000E+0
    0.00000000000000E+0      0.00000000000000E+0      0.00000000000000E+0
   BmNSMass                 4     424       1     3.00000000000000E+2
3.00000000000000E+2      0.00000000000000E+0      0.00000000000000E+0
0.00000000000000E+0      0.00000000000000E+0      1.00000000000000E+0
    0.00000000000000E+0      0.00000000000000E+0      0.00000000000000E+0
   BmNSMass                 4     425       1     3.00000000000000E+2
3.00000000000000E+2      0.00000000000000E+0      0.00000000000000E+0
0.00000000000000E+0      0.00000000000000E+0      1.00000000000000E+0
    0.00000000000000E+0      0.00000000000000E+0      0.00000000000000E+0
   BmNSMass                 4     426       1     3.00000000000000E+2
3.00000000000000E+2      0.00000000000000E+0      0.00000000000000E+0
0.00000000000000E+0      0.00000000000000E+0      1.00000000000000E+0
    0.00000000000000E+0      0.00000000000000E+0      0.00000000000000E+0
   BmNSMass                 4     427       1     3.00000000000000E+2
3.00000000000000E+2      0.00000000000000E+0      0.00000000000000E+0
0.00000000000000E+0      0.00000000000000E+0      1.00000000000000E+0
    0.00000000000000E+0      0.00000000000000E+0      0.00000000000000E+0
   BmNSMass                 4     428       1     3.00000000000000E+2
3.00000000000000E+2      0.00000000000000E+0      0.00000000000000E+0
0.00000000000000E+0      0.00000000000000E+0      1.00000000000000E+0
    0.00000000000000E+0      0.00000000000000E+0      0.00000000000000E+0
   BmNSMass                 4     429       1     3.00000000000000E+2
3.00000000000000E+2      0.00000000000000E+0      0.00000000000000E+0
0.00000000000000E+0      0.00000000000000E+0      1.00000000000000E+0
    0.00000000000000E+0      0.00000000000000E+0      0.00000000000000E+0
   BmNSMass                 4     430       1     3.00000000000000E+2
3.00000000000000E+2      0.00000000000000E+0      0.00000000000000E+0
0.00000000000000E+0      0.00000000000000E+0      1.00000000000000E+0
    0.00000000000000E+0      0.00000000000000E+0      0.00000000000000E+0
   BmNSMass                 4     431       1     3.00000000000000E+2
3.00000000000000E+2      0.00000000000000E+0      0.00000000000000E+0
0.00000000000000E+0      0.00000000000000E+0      1.00000000000000E+0
    0.00000000000000E+0      0.00000000000000E+0      0.00000000000000E+0
   BmNSMass                 4     432       1     3.00000000000000E+2
3.00000000000000E+2      0.00000000000000E+0      0.00000000000000E+0
0.00000000000000E+0      0.00000000000000E+0      1.00000000000000E+0
    0.00000000000000E+0      0.00000000000000E+0      0.00000000000000E+0
   BmNSMass                 4     433       1     3.00000000000000E+2
3.00000000000000E+2      0.00000000000000E+0      0.00000000000000E+0
0.00000000000000E+0      0.00000000000000E+0      1.00000000000000E+0
    0.00000000000000E+0      0.00000000000000E+0      0.00000000000000E+0
   BmNSMass                 4     503       1     7.00000000000000E+2
7.00000000000000E+2      0.00000000000000E+0      0.00000000000000E+0
0.00000000000000E+0      0.00000000000000E+0      1.00000000000000E+0
    0.00000000000000E+0      0.00000000000000E+0      0.00000000000000E+0
   BmNSMass                 4     504       1     7.00000000000000E+2
```

```
7.00000000000000E+2      0.00000000000000E+0      0.00000000000000E+0
0.00000000000000E+0      0.00000000000000E+0      1.00000000000000E+0
    0.00000000000000E+0      0.00000000000000E+0      0.00000000000000E+0
   BmNSMass                4     505        1      7.00000000000000E+2
7.00000000000000E+2      0.00000000000000E+0      0.00000000000000E+0
0.00000000000000E+0      0.00000000000000E+0      1.00000000000000E+0
    0.00000000000000E+0      0.00000000000000E+0      0.00000000000000E+0
   BmNSMass                4     506        1      7.00000000000000E+2
7.00000000000000E+2      0.00000000000000E+0      0.00000000000000E+0
0.00000000000000E+0      0.00000000000000E+0      1.00000000000000E+0
    0.00000000000000E+0      0.00000000000000E+0      0.00000000000000E+0
   BmNSMass                4     507        1      7.00000000000000E+2
7.00000000000000E+2      0.00000000000000E+0      0.00000000000000E+0
0.00000000000000E+0      0.00000000000000E+0      1.00000000000000E+0
    0.00000000000000E+0      0.00000000000000E+0      0.00000000000000E+0
   BmNSMass                4     508        1      7.00000000000000E+2
7.00000000000000E+2      0.00000000000000E+0      0.00000000000000E+0
0.00000000000000E+0      0.00000000000000E+0      1.00000000000000E+0
    0.00000000000000E+0      0.00000000000000E+0      0.00000000000000E+0
   BmNSMass                4     509        1      7.00000000000000E+2
7.00000000000000E+2      0.00000000000000E+0      0.00000000000000E+0
0.00000000000000E+0      0.00000000000000E+0      1.00000000000000E+0
    0.00000000000000E+0      0.00000000000000E+0      0.00000000000000E+0
   BmNSMass                4     510        1      7.00000000000000E+2
7.00000000000000E+2      0.00000000000000E+0      0.00000000000000E+0
0.00000000000000E+0      0.00000000000000E+0      1.00000000000000E+0
    0.00000000000000E+0      0.00000000000000E+0      0.00000000000000E+0
   BmNSMass                4     511        1      7.00000000000000E+2
7.00000000000000E+2      0.00000000000000E+0      0.00000000000000E+0
0.00000000000000E+0      0.00000000000000E+0      1.00000000000000E+0
    0.00000000000000E+0      0.00000000000000E+0      0.00000000000000E+0
   BmNSMass                4     512        1      7.00000000000000E+2
7.00000000000000E+2      0.00000000000000E+0      0.00000000000000E+0
0.00000000000000E+0      0.00000000000000E+0      1.00000000000000E+0
    0.00000000000000E+0      0.00000000000000E+0      0.00000000000000E+0
   BmNSMass                4     513        1      7.00000000000000E+2
7.00000000000000E+2      0.00000000000000E+0      0.00000000000000E+0
0.00000000000000E+0      0.00000000000000E+0      1.00000000000000E+0
    0.00000000000000E+0      0.00000000000000E+0      0.00000000000000E+0
   BmNSMass                4     514        1      7.00000000000000E+2
7.00000000000000E+2      0.00000000000000E+0      0.00000000000000E+0
0.00000000000000E+0      0.00000000000000E+0      1.00000000000000E+0
    0.00000000000000E+0      0.00000000000000E+0      0.00000000000000E+0
   BmNSMass                4     515        1      7.00000000000000E+2
7.00000000000000E+2      0.00000000000000E+0      0.00000000000000E+0
0.00000000000000E+0      0.00000000000000E+0      1.00000000000000E+0
    0.00000000000000E+0      0.00000000000000E+0      0.00000000000000E+0
   BmNSMass                4     516        1      7.00000000000000E+2
7.00000000000000E+2      0.00000000000000E+0      0.00000000000000E+0
0.00000000000000E+0      0.00000000000000E+0      1.00000000000000E+0
    0.00000000000000E+0      0.00000000000000E+0      0.00000000000000E+0
   BmNSMass                4     517        1      7.00000000000000E+2
7.00000000000000E+2      0.00000000000000E+0      0.00000000000000E+0
0.00000000000000E+0      0.00000000000000E+0      1.00000000000000E+0
```

```
    0.00000000000000E+0      0.00000000000000E+0      0.00000000000000E+0
   BmNSMass                 4     518         1     7.00000000000000E+2
7.00000000000000E+2      0.00000000000000E+0      0.00000000000000E+0
0.00000000000000E+0      0.00000000000000E+0      1.00000000000000E+0
    0.00000000000000E+0      0.00000000000000E+0      0.00000000000000E+0
   BmNSMass                 4     519         1     7.00000000000000E+2
7.00000000000000E+2      0.00000000000000E+0      0.00000000000000E+0
0.00000000000000E+0      0.00000000000000E+0      1.00000000000000E+0
    0.00000000000000E+0      0.00000000000000E+0      0.00000000000000E+0
   BmNSMass                 4     520         1     7.00000000000000E+2
7.00000000000000E+2      0.00000000000000E+0      0.00000000000000E+0
0.00000000000000E+0      0.00000000000000E+0      1.00000000000000E+0
    0.00000000000000E+0      0.00000000000000E+0      0.00000000000000E+0
   BmNSMass                 4     521         1     7.00000000000000E+2
7.00000000000000E+2      0.00000000000000E+0      0.00000000000000E+0
0.00000000000000E+0      0.00000000000000E+0      1.00000000000000E+0
    0.00000000000000E+0      0.00000000000000E+0      0.00000000000000E+0
   BmNSMass                 4     522         1     7.00000000000000E+2
7.00000000000000E+2      0.00000000000000E+0      0.00000000000000E+0
0.00000000000000E+0      0.00000000000000E+0      1.00000000000000E+0
    0.00000000000000E+0      0.00000000000000E+0      0.00000000000000E+0
   BmNSMass                 4     523         1     7.00000000000000E+2
7.00000000000000E+2      0.00000000000000E+0      0.00000000000000E+0
0.00000000000000E+0      0.00000000000000E+0      1.00000000000000E+0
    0.00000000000000E+0      0.00000000000000E+0      0.00000000000000E+0
   BmNSMass                 4     524         1     7.00000000000000E+2
7.00000000000000E+2      0.00000000000000E+0      0.00000000000000E+0
0.00000000000000E+0      0.00000000000000E+0      1.00000000000000E+0
    0.00000000000000E+0      0.00000000000000E+0      0.00000000000000E+0
   BmNSMass                 4     525         1     7.00000000000000E+2
7.00000000000000E+2      0.00000000000000E+0      0.00000000000000E+0
0.00000000000000E+0      0.00000000000000E+0      1.00000000000000E+0
    0.00000000000000E+0      0.00000000000000E+0      0.00000000000000E+0
   BmNSMass                 4     526         1     7.00000000000000E+2
7.00000000000000E+2      0.00000000000000E+0      0.00000000000000E+0
0.00000000000000E+0      0.00000000000000E+0      1.00000000000000E+0
    0.00000000000000E+0      0.00000000000000E+0      0.00000000000000E+0
   BmNSMass                 4     527         1     7.00000000000000E+2
7.00000000000000E+2      0.00000000000000E+0      0.00000000000000E+0
0.00000000000000E+0      0.00000000000000E+0      1.00000000000000E+0
    0.00000000000000E+0      0.00000000000000E+0      0.00000000000000E+0
   BmNSMass                 4     528         1     7.00000000000000E+2
7.00000000000000E+2      0.00000000000000E+0      0.00000000000000E+0
0.00000000000000E+0      0.00000000000000E+0      1.00000000000000E+0
    0.00000000000000E+0      0.00000000000000E+0      0.00000000000000E+0
   BmNSMass                 4     529         1     7.00000000000000E+2
7.00000000000000E+2      0.00000000000000E+0      0.00000000000000E+0
0.00000000000000E+0      0.00000000000000E+0      1.00000000000000E+0
    0.00000000000000E+0      0.00000000000000E+0      0.00000000000000E+0
   BmNSMass                 4     530         1     7.00000000000000E+2
7.00000000000000E+2      0.00000000000000E+0      0.00000000000000E+0
0.00000000000000E+0      0.00000000000000E+0      1.00000000000000E+0
    0.00000000000000E+0      0.00000000000000E+0      0.00000000000000E+0
   BmNSMass                 4     531         1     7.00000000000000E+2
```

```
7.00000000000000E+2      0.00000000000000E+0      0.00000000000000E+0
0.00000000000000E+0      0.00000000000000E+0      1.00000000000000E+0
    0.00000000000000E+0      0.00000000000000E+0      0.00000000000000E+0
   BmNSMass                 4     532       1     7.00000000000000E+2
7.00000000000000E+2      0.00000000000000E+0      0.00000000000000E+0
0.00000000000000E+0      0.00000000000000E+0      1.00000000000000E+0
    0.00000000000000E+0      0.00000000000000E+0      0.00000000000000E+0
   BmNSMass                 4     533       1     7.00000000000000E+2
7.00000000000000E+2      0.00000000000000E+0      0.00000000000000E+0
0.00000000000000E+0      0.00000000000000E+0      1.00000000000000E+0
    0.00000000000000E+0      0.00000000000000E+0      0.00000000000000E+0
   BmNSMass                 4     534       1     7.00000000000000E+2
7.00000000000000E+2      0.00000000000000E+0      0.00000000000000E+0
0.00000000000000E+0      0.00000000000000E+0      1.00000000000000E+0
    0.00000000000000E+0      0.00000000000000E+0      0.00000000000000E+0
   BmNSMass                 4     535       1     7.00000000000000E+2
7.00000000000000E+2      0.00000000000000E+0      0.00000000000000E+0
0.00000000000000E+0      0.00000000000000E+0      1.00000000000000E+0
    0.00000000000000E+0      0.00000000000000E+0      0.00000000000000E+0
   BmNSMass                 4     536       1     7.00000000000000E+2
7.00000000000000E+2      0.00000000000000E+0      0.00000000000000E+0
0.00000000000000E+0      0.00000000000000E+0      1.00000000000000E+0
    0.00000000000000E+0      0.00000000000000E+0      0.00000000000000E+0
   BmNSMass                 4     537       1     7.00000000000000E+2
7.00000000000000E+2      0.00000000000000E+0      0.00000000000000E+0
0.00000000000000E+0      0.00000000000000E+0      1.00000000000000E+0
    0.00000000000000E+0      0.00000000000000E+0      0.00000000000000E+0
   BmNSMass                 4     538       1     7.00000000000000E+2
7.00000000000000E+2      0.00000000000000E+0      0.00000000000000E+0
0.00000000000000E+0      0.00000000000000E+0      1.00000000000000E+0
    0.00000000000000E+0      0.00000000000000E+0      0.00000000000000E+0
   BmNSMass                 4     539       1     7.00000000000000E+2
7.00000000000000E+2      0.00000000000000E+0      0.00000000000000E+0
0.00000000000000E+0      0.00000000000000E+0      1.00000000000000E+0
    0.00000000000000E+0      0.00000000000000E+0      0.00000000000000E+0
   BmNSMass                 4     540       1     7.00000000000000E+2
7.00000000000000E+2      0.00000000000000E+0      0.00000000000000E+0
0.00000000000000E+0      0.00000000000000E+0      1.00000000000000E+0
    0.00000000000000E+0      0.00000000000000E+0      0.00000000000000E+0
   BmNSMass                 4     541       1     7.00000000000000E+2
7.00000000000000E+2      0.00000000000000E+0      0.00000000000000E+0
0.00000000000000E+0      0.00000000000000E+0      1.00000000000000E+0
    0.00000000000000E+0      0.00000000000000E+0      0.00000000000000E+0
   BmNSMass                 4     542       1     7.00000000000000E+2
7.00000000000000E+2      0.00000000000000E+0      0.00000000000000E+0
0.00000000000000E+0      0.00000000000000E+0      1.00000000000000E+0
    0.00000000000000E+0      0.00000000000000E+0      0.00000000000000E+0
   BmNSMass                 4     543       1     7.00000000000000E+2
7.00000000000000E+2      0.00000000000000E+0      0.00000000000000E+0
0.00000000000000E+0      0.00000000000000E+0      1.00000000000000E+0
    0.00000000000000E+0      0.00000000000000E+0      0.00000000000000E+0
   BmNSMass                 4     544       1     7.00000000000000E+2
7.00000000000000E+2      0.00000000000000E+0      0.00000000000000E+0
0.00000000000000E+0      0.00000000000000E+0      1.00000000000000E+0
```

```
    0.00000000000000E+0      0.00000000000000E+0      0.00000000000000E+0
   BmNSMass                 4     545       1     7.00000000000000E+2
7.00000000000000E+2      0.00000000000000E+0      0.00000000000000E+0
0.00000000000000E+0      0.00000000000000E+0      1.00000000000000E+0
    0.00000000000000E+0      0.00000000000000E+0      0.00000000000000E+0
   BmNSMass                 4     546       1     7.00000000000000E+2
7.00000000000000E+2      0.00000000000000E+0      0.00000000000000E+0
0.00000000000000E+0      0.00000000000000E+0      1.00000000000000E+0
    0.00000000000000E+0      0.00000000000000E+0      0.00000000000000E+0
   BmNSMass                 4     547       1     7.00000000000000E+2
7.00000000000000E+2      0.00000000000000E+0      0.00000000000000E+0
0.00000000000000E+0      0.00000000000000E+0      1.00000000000000E+0
    0.00000000000000E+0      0.00000000000000E+0      0.00000000000000E+0
   BmNSMass                 4     548       1     7.00000000000000E+2
7.00000000000000E+2      0.00000000000000E+0      0.00000000000000E+0
0.00000000000000E+0      0.00000000000000E+0      1.00000000000000E+0
    0.00000000000000E+0      0.00000000000000E+0      0.00000000000000E+0
   BmNSMass                 4     549       1     7.00000000000000E+2
7.00000000000000E+2      0.00000000000000E+0      0.00000000000000E+0
0.00000000000000E+0      0.00000000000000E+0      1.00000000000000E+0
    0.00000000000000E+0      0.00000000000000E+0      0.00000000000000E+0
   BmNSMass                 4     550       1     7.00000000000000E+2
7.00000000000000E+2      0.00000000000000E+0      0.00000000000000E+0
0.00000000000000E+0      0.00000000000000E+0      1.00000000000000E+0
    0.00000000000000E+0      0.00000000000000E+0      0.00000000000000E+0
   BmNSMass                 4     551       1     7.00000000000000E+2
7.00000000000000E+2      0.00000000000000E+0      0.00000000000000E+0
0.00000000000000E+0      0.00000000000000E+0      1.00000000000000E+0
    0.00000000000000E+0      0.00000000000000E+0      0.00000000000000E+0
   BmNSMass                 4     552       1     7.00000000000000E+2
7.00000000000000E+2      0.00000000000000E+0      0.00000000000000E+0
0.00000000000000E+0      0.00000000000000E+0      1.00000000000000E+0
    0.00000000000000E+0      0.00000000000000E+0      0.00000000000000E+0
   BmNSMass                 4     553       1     7.00000000000000E+2
7.00000000000000E+2      0.00000000000000E+0      0.00000000000000E+0
0.00000000000000E+0      0.00000000000000E+0      1.00000000000000E+0
    0.00000000000000E+0      0.00000000000000E+0      0.00000000000000E+0
   BmNSMass                 4     554       1     7.00000000000000E+2
7.00000000000000E+2      0.00000000000000E+0      0.00000000000000E+0
0.00000000000000E+0      0.00000000000000E+0      1.00000000000000E+0
    0.00000000000000E+0      0.00000000000000E+0      0.00000000000000E+0
   BmNSMass                 4     555       1     7.00000000000000E+2
7.00000000000000E+2      0.00000000000000E+0      0.00000000000000E+0
0.00000000000000E+0      0.00000000000000E+0      1.00000000000000E+0
    0.00000000000000E+0      0.00000000000000E+0      0.00000000000000E+0
   BmNSMass                 4     556       1     7.00000000000000E+2
7.00000000000000E+2      0.00000000000000E+0      0.00000000000000E+0
0.00000000000000E+0      0.00000000000000E+0      1.00000000000000E+0
    0.00000000000000E+0      0.00000000000000E+0      0.00000000000000E+0
   BmNSMass                 4     557       1     7.00000000000000E+2
7.00000000000000E+2      0.00000000000000E+0      0.00000000000000E+0
0.00000000000000E+0      0.00000000000000E+0      1.00000000000000E+0
    0.00000000000000E+0      0.00000000000000E+0      0.00000000000000E+0
   BmNSMass                 4     558       1     7.00000000000000E+2
```

```
7.00000000000000E+2      0.00000000000000E+0      0.00000000000000E+0
0.00000000000000E+0      0.00000000000000E+0      1.00000000000000E+0
    0.00000000000000E+0      0.00000000000000E+0      0.00000000000000E+0
   BmNSMass                 4     649        1     1.50000000000000E+2
1.50000000000000E+2      0.00000000000000E+0      0.00000000000000E+0
0.00000000000000E+0      0.00000000000000E+0      1.00000000000000E+0
    0.00000000000000E+0      0.00000000000000E+0      0.00000000000000E+0
   BmNSMass                 4     650        1     1.50000000000000E+2
1.50000000000000E+2      0.00000000000000E+0      0.00000000000000E+0
0.00000000000000E+0      0.00000000000000E+0      1.00000000000000E+0
    0.00000000000000E+0      0.00000000000000E+0      0.00000000000000E+0
   BmNSMass                 4     651        1     1.50000000000000E+2
1.50000000000000E+2      0.00000000000000E+0      0.00000000000000E+0
0.00000000000000E+0      0.00000000000000E+0      1.00000000000000E+0
    0.00000000000000E+0      0.00000000000000E+0      0.00000000000000E+0
   BmNSMass                 4     652        1     1.50000000000000E+2
1.50000000000000E+2      0.00000000000000E+0      0.00000000000000E+0
0.00000000000000E+0      0.00000000000000E+0      1.00000000000000E+0
    0.00000000000000E+0      0.00000000000000E+0      0.00000000000000E+0
   BmNSMass                 4     653        1     3.00000000000000E+2
3.00000000000000E+2      0.00000000000000E+0      0.00000000000000E+0
0.00000000000000E+0      0.00000000000000E+0      1.00000000000000E+0
    0.00000000000000E+0      0.00000000000000E+0      0.00000000000000E+0
   BmNSMass                 4     654        1     3.00000000000000E+2
3.00000000000000E+2      0.00000000000000E+0      0.00000000000000E+0
0.00000000000000E+0      0.00000000000000E+0      1.00000000000000E+0
    0.00000000000000E+0      0.00000000000000E+0      0.00000000000000E+0
   BmNSMass                 4     655        1     3.00000000000000E+2
3.00000000000000E+2      0.00000000000000E+0      0.00000000000000E+0
0.00000000000000E+0      0.00000000000000E+0      1.00000000000000E+0
    0.00000000000000E+0      0.00000000000000E+0      0.00000000000000E+0
   BmNSMass                 4     656        1     3.00000000000000E+2
3.00000000000000E+2      0.00000000000000E+0      0.00000000000000E+0
0.00000000000000E+0      0.00000000000000E+0      1.00000000000000E+0
    0.00000000000000E+0      0.00000000000000E+0      0.00000000000000E+0
   BmNSMass                 4     657        1     3.00000000000000E+2
3.00000000000000E+2      0.00000000000000E+0      0.00000000000000E+0
0.00000000000000E+0      0.00000000000000E+0      1.00000000000000E+0
    0.00000000000000E+0      0.00000000000000E+0      0.00000000000000E+0
   BmNSMass                 4     658        1     3.00000000000000E+2
3.00000000000000E+2      0.00000000000000E+0      0.00000000000000E+0
0.00000000000000E+0      0.00000000000000E+0      1.00000000000000E+0
    0.00000000000000E+0      0.00000000000000E+0      0.00000000000000E+0
   BmNSMass                 4     659        1     3.00000000000000E+2
3.00000000000000E+2      0.00000000000000E+0      0.00000000000000E+0
0.00000000000000E+0      0.00000000000000E+0      1.00000000000000E+0
    0.00000000000000E+0      0.00000000000000E+0      0.00000000000000E+0
   BmNSMass                 4     660        1     3.00000000000000E+2
3.00000000000000E+2      0.00000000000000E+0      0.00000000000000E+0
0.00000000000000E+0      0.00000000000000E+0      1.00000000000000E+0
    0.00000000000000E+0      0.00000000000000E+0      0.00000000000000E+0
   BmNSMass                 4     661        1     3.00000000000000E+2
3.00000000000000E+2      0.00000000000000E+0      0.00000000000000E+0
0.00000000000000E+0      0.00000000000000E+0      1.00000000000000E+0
```

```
    0.00000000000000E+0      0.00000000000000E+0      0.00000000000000E+0
   BmNSMass                 4     662       1     3.00000000000000E+2
3.00000000000000E+2      0.00000000000000E+0      0.00000000000000E+0
0.00000000000000E+0      0.00000000000000E+0      1.00000000000000E+0
    0.00000000000000E+0      0.00000000000000E+0      0.00000000000000E+0
   BmNSMass                 4     663       1     3.00000000000000E+2
3.00000000000000E+2      0.00000000000000E+0      0.00000000000000E+0
0.00000000000000E+0      0.00000000000000E+0      1.00000000000000E+0
    0.00000000000000E+0      0.00000000000000E+0      0.00000000000000E+0
   BmNSMass                 4     664       1     3.00000000000000E+2
3.00000000000000E+2      0.00000000000000E+0      0.00000000000000E+0
0.00000000000000E+0      0.00000000000000E+0      1.00000000000000E+0
    0.00000000000000E+0      0.00000000000000E+0      0.00000000000000E+0
   BmNSMass                 4     665       1     3.00000000000000E+2
3.00000000000000E+2      0.00000000000000E+0      0.00000000000000E+0
0.00000000000000E+0      0.00000000000000E+0      1.00000000000000E+0
    0.00000000000000E+0      0.00000000000000E+0      0.00000000000000E+0
   BmNSMass                 4     666       1     3.00000000000000E+2
3.00000000000000E+2      0.00000000000000E+0      0.00000000000000E+0
0.00000000000000E+0      0.00000000000000E+0      1.00000000000000E+0
    0.00000000000000E+0      0.00000000000000E+0      0.00000000000000E+0
   BmNSMass                 4     667       1     3.00000000000000E+2
3.00000000000000E+2      0.00000000000000E+0      0.00000000000000E+0
0.00000000000000E+0      0.00000000000000E+0      1.00000000000000E+0
    0.00000000000000E+0      0.00000000000000E+0      0.00000000000000E+0
   BmNSMass                 4     668       1     3.00000000000000E+2
3.00000000000000E+2      0.00000000000000E+0      0.00000000000000E+0
0.00000000000000E+0      0.00000000000000E+0      1.00000000000000E+0
    0.00000000000000E+0      0.00000000000000E+0      0.00000000000000E+0

/ ______________________________________________________________________________
/ PLATE NON-STRUCTURAL MASSES
/ Q00 - Sovraccarico Accidentale
   PlNSMass                 5       1     1.00000000000000E+3
0.00000000000000E+0      0.00000000000000E+0      0.00000000000000E+0
0.00000000000000E+0
   PlNSMass                 5       2     1.00000000000000E+3
0.00000000000000E+0      0.00000000000000E+0      0.00000000000000E+0
0.00000000000000E+0
   PlNSMass                 5       3     1.00000000000000E+3
0.00000000000000E+0      0.00000000000000E+0      0.00000000000000E+0
0.00000000000000E+0
   PlNSMass                 5       4     1.00000000000000E+3
0.00000000000000E+0      0.00000000000000E+0      0.00000000000000E+0
0.00000000000000E+0
   PlNSMass                 5       5     1.00000000000000E+3
0.00000000000000E+0      0.00000000000000E+0      0.00000000000000E+0
0.00000000000000E+0
   PlNSMass                 5       6     1.00000000000000E+3
0.00000000000000E+0      0.00000000000000E+0      0.00000000000000E+0
0.00000000000000E+0
   PlNSMass                 5       7     1.00000000000000E+3
0.00000000000000E+0      0.00000000000000E+0      0.00000000000000E+0
0.00000000000000E+0
```

```
   PlNSMass                 5       8     1.00000000000000E+3
0.00000000000000E+0      0.00000000000000E+0      0.00000000000000E+0
0.00000000000000E+0
   PlNSMass                 5       9     1.00000000000000E+3
0.00000000000000E+0      0.00000000000000E+0      0.00000000000000E+0
0.00000000000000E+0
   PlNSMass                 5      10     1.00000000000000E+3
0.00000000000000E+0      0.00000000000000E+0      0.00000000000000E+0
0.00000000000000E+0
   PlNSMass                 5      11     1.00000000000000E+3
0.00000000000000E+0      0.00000000000000E+0      0.00000000000000E+0
0.00000000000000E+0
   PlNSMass                 5      12     1.00000000000000E+3
0.00000000000000E+0      0.00000000000000E+0      0.00000000000000E+0
0.00000000000000E+0
   PlNSMass                 5      13     1.00000000000000E+3
0.00000000000000E+0      0.00000000000000E+0      0.00000000000000E+0
0.00000000000000E+0
   PlNSMass                 5      14     1.00000000000000E+3
0.00000000000000E+0      0.00000000000000E+0      0.00000000000000E+0
0.00000000000000E+0
   PlNSMass                 5      15     1.00000000000000E+3
0.00000000000000E+0      0.00000000000000E+0      0.00000000000000E+0
0.00000000000000E+0
   PlNSMass                 5      16     1.00000000000000E+3
0.00000000000000E+0      0.00000000000000E+0      0.00000000000000E+0
0.00000000000000E+0
   PlNSMass                 5      17     1.00000000000000E+3
0.00000000000000E+0      0.00000000000000E+0      0.00000000000000E+0
0.00000000000000E+0
   PlNSMass                 5      18     1.00000000000000E+3
0.00000000000000E+0      0.00000000000000E+0      0.00000000000000E+0
0.00000000000000E+0
   PlNSMass                 5      19     1.00000000000000E+3
0.00000000000000E+0      0.00000000000000E+0      0.00000000000000E+0
0.00000000000000E+0
   PlNSMass                 5      20     1.00000000000000E+3
0.00000000000000E+0      0.00000000000000E+0      0.00000000000000E+0
0.00000000000000E+0
   PlNSMass                 5      21     1.00000000000000E+3
0.00000000000000E+0      0.00000000000000E+0      0.00000000000000E+0
0.00000000000000E+0
   PlNSMass                 5      22     1.00000000000000E+3
0.00000000000000E+0      0.00000000000000E+0      0.00000000000000E+0
0.00000000000000E+0
   PlNSMass                 5      23     1.00000000000000E+3
0.00000000000000E+0      0.00000000000000E+0      0.00000000000000E+0
0.00000000000000E+0
   PlNSMass                 5      24     1.00000000000000E+3
0.00000000000000E+0      0.00000000000000E+0      0.00000000000000E+0
0.00000000000000E+0
   PlNSMass                 5      25     1.00000000000000E+3
0.00000000000000E+0      0.00000000000000E+0      0.00000000000000E+0
0.00000000000000E+0
```

```
   PlNSMass                 5      26     1.00000000000000E+3
0.00000000000000E+0      0.00000000000000E+0      0.00000000000000E+0
0.00000000000000E+0
   PlNSMass                 5      27     1.00000000000000E+3
0.00000000000000E+0      0.00000000000000E+0      0.00000000000000E+0
0.00000000000000E+0
   PlNSMass                 5      28     1.00000000000000E+3
0.00000000000000E+0      0.00000000000000E+0      0.00000000000000E+0
0.00000000000000E+0
   PlNSMass                 5      29     1.00000000000000E+3
0.00000000000000E+0      0.00000000000000E+0      0.00000000000000E+0
0.00000000000000E+0
   PlNSMass                 5      30     1.00000000000000E+3
0.00000000000000E+0      0.00000000000000E+0      0.00000000000000E+0
0.00000000000000E+0
   PlNSMass                 5      31     1.00000000000000E+3
0.00000000000000E+0      0.00000000000000E+0      0.00000000000000E+0
0.00000000000000E+0
   PlNSMass                 5      32     1.00000000000000E+3
0.00000000000000E+0      0.00000000000000E+0      0.00000000000000E+0
0.00000000000000E+0
   PlNSMass                 5      33     1.00000000000000E+3
0.00000000000000E+0      0.00000000000000E+0      0.00000000000000E+0
0.00000000000000E+0
   PlNSMass                 5      34     1.00000000000000E+3
0.00000000000000E+0      0.00000000000000E+0      0.00000000000000E+0
0.00000000000000E+0
   PlNSMass                 5      35     1.00000000000000E+3
0.00000000000000E+0      0.00000000000000E+0      0.00000000000000E+0
0.00000000000000E+0
   PlNSMass                 5      36     1.00000000000000E+3
0.00000000000000E+0      0.00000000000000E+0      0.00000000000000E+0
0.00000000000000E+0
   PlNSMass                 5      37     1.00000000000000E+3
0.00000000000000E+0      0.00000000000000E+0      0.00000000000000E+0
0.00000000000000E+0
   PlNSMass                 5      38     1.00000000000000E+3
0.00000000000000E+0      0.00000000000000E+0      0.00000000000000E+0
0.00000000000000E+0
   PlNSMass                 5      39     1.00000000000000E+3
0.00000000000000E+0      0.00000000000000E+0      0.00000000000000E+0
0.00000000000000E+0
   PlNSMass                 5      40     1.00000000000000E+3
0.00000000000000E+0      0.00000000000000E+0      0.00000000000000E+0
0.00000000000000E+0
   PlNSMass                 5      41     1.00000000000000E+3
0.00000000000000E+0      0.00000000000000E+0      0.00000000000000E+0
0.00000000000000E+0
   PlNSMass                 5      42     1.00000000000000E+3
0.00000000000000E+0      0.00000000000000E+0      0.00000000000000E+0
0.00000000000000E+0
   PlNSMass                 5      43     1.00000000000000E+3
0.00000000000000E+0      0.00000000000000E+0      0.00000000000000E+0
0.00000000000000E+0
```

```
   PlNSMass                 5      44     1.00000000000000E+3
0.00000000000000E+0      0.00000000000000E+0      0.00000000000000E+0
0.00000000000000E+0
   PlNSMass                 5      45     1.00000000000000E+3
0.00000000000000E+0      0.00000000000000E+0      0.00000000000000E+0
0.00000000000000E+0
   PlNSMass                 5      46     1.00000000000000E+3
0.00000000000000E+0      0.00000000000000E+0      0.00000000000000E+0
0.00000000000000E+0
   PlNSMass                 5      47     1.00000000000000E+3
0.00000000000000E+0      0.00000000000000E+0      0.00000000000000E+0
0.00000000000000E+0
   PlNSMass                 5      48     1.00000000000000E+3
0.00000000000000E+0      0.00000000000000E+0      0.00000000000000E+0
0.00000000000000E+0
   PlNSMass                 5      49     1.00000000000000E+3
0.00000000000000E+0      0.00000000000000E+0      0.00000000000000E+0
0.00000000000000E+0
   PlNSMass                 5      50     1.00000000000000E+3
0.00000000000000E+0      0.00000000000000E+0      0.00000000000000E+0
0.00000000000000E+0
   PlNSMass                 5      51     1.00000000000000E+3
0.00000000000000E+0      0.00000000000000E+0      0.00000000000000E+0
0.00000000000000E+0
   PlNSMass                 5      52     1.00000000000000E+3
0.00000000000000E+0      0.00000000000000E+0      0.00000000000000E+0
0.00000000000000E+0
   PlNSMass                 5      53     1.00000000000000E+3
0.00000000000000E+0      0.00000000000000E+0      0.00000000000000E+0
0.00000000000000E+0
   PlNSMass                 5      54     1.00000000000000E+3
0.00000000000000E+0      0.00000000000000E+0      0.00000000000000E+0
0.00000000000000E+0
   PlNSMass                 5      55     1.00000000000000E+3
0.00000000000000E+0      0.00000000000000E+0      0.00000000000000E+0
0.00000000000000E+0
   PlNSMass                 5      56     1.00000000000000E+3
0.00000000000000E+0      0.00000000000000E+0      0.00000000000000E+0
0.00000000000000E+0
   PlNSMass                 5      57     1.00000000000000E+3
0.00000000000000E+0      0.00000000000000E+0      0.00000000000000E+0
0.00000000000000E+0
   PlNSMass                 5      58     1.00000000000000E+3
0.00000000000000E+0      0.00000000000000E+0      0.00000000000000E+0
0.00000000000000E+0
   PlNSMass                 5      59     1.00000000000000E+3
0.00000000000000E+0      0.00000000000000E+0      0.00000000000000E+0
0.00000000000000E+0
   PlNSMass                 5      60     1.00000000000000E+3
0.00000000000000E+0      0.00000000000000E+0      0.00000000000000E+0
0.00000000000000E+0
   PlNSMass                 5      61     1.00000000000000E+3
0.00000000000000E+0      0.00000000000000E+0      0.00000000000000E+0
0.00000000000000E+0
```

```
   PlNSMass                 5      62     1.00000000000000E+3
0.00000000000000E+0      0.00000000000000E+0      0.00000000000000E+0
0.00000000000000E+0
   PlNSMass                 5      63     1.00000000000000E+3
0.00000000000000E+0      0.00000000000000E+0      0.00000000000000E+0
0.00000000000000E+0
   PlNSMass                 5      64     1.00000000000000E+3
0.00000000000000E+0      0.00000000000000E+0      0.00000000000000E+0
0.00000000000000E+0
   PlNSMass                 5      65     1.00000000000000E+3
0.00000000000000E+0      0.00000000000000E+0      0.00000000000000E+0
0.00000000000000E+0
   PlNSMass                 5      66     1.00000000000000E+3
0.00000000000000E+0      0.00000000000000E+0      0.00000000000000E+0
0.00000000000000E+0
   PlNSMass                 5      67     1.00000000000000E+3
0.00000000000000E+0      0.00000000000000E+0      0.00000000000000E+0
0.00000000000000E+0
   PlNSMass                 5      68     1.00000000000000E+3
0.00000000000000E+0      0.00000000000000E+0      0.00000000000000E+0
0.00000000000000E+0
   PlNSMass                 5      69     1.00000000000000E+3
0.00000000000000E+0      0.00000000000000E+0      0.00000000000000E+0
0.00000000000000E+0
   PlNSMass                 5      70     1.00000000000000E+3
0.00000000000000E+0      0.00000000000000E+0      0.00000000000000E+0
0.00000000000000E+0
   PlNSMass                 5      71     1.00000000000000E+3
0.00000000000000E+0      0.00000000000000E+0      0.00000000000000E+0
0.00000000000000E+0
   PlNSMass                 5      72     1.00000000000000E+3
0.00000000000000E+0      0.00000000000000E+0      0.00000000000000E+0
0.00000000000000E+0
   PlNSMass                 5      73     1.00000000000000E+3
0.00000000000000E+0      0.00000000000000E+0      0.00000000000000E+0
0.00000000000000E+0
   PlNSMass                 5      74     1.00000000000000E+3
0.00000000000000E+0      0.00000000000000E+0      0.00000000000000E+0
0.00000000000000E+0
   PlNSMass                 5      75     1.00000000000000E+3
0.00000000000000E+0      0.00000000000000E+0      0.00000000000000E+0
0.00000000000000E+0
   PlNSMass                 5      76     1.00000000000000E+3
0.00000000000000E+0      0.00000000000000E+0      0.00000000000000E+0
0.00000000000000E+0
   PlNSMass                 5      77     1.00000000000000E+3
0.00000000000000E+0      0.00000000000000E+0      0.00000000000000E+0
0.00000000000000E+0
   PlNSMass                 5      78     1.00000000000000E+3
0.00000000000000E+0      0.00000000000000E+0      0.00000000000000E+0
0.00000000000000E+0
   PlNSMass                 5      79     1.00000000000000E+3
0.00000000000000E+0      0.00000000000000E+0      0.00000000000000E+0
0.00000000000000E+0
```

```
   PlNSMass                 5      80     1.00000000000000E+3
0.00000000000000E+0      0.00000000000000E+0      0.00000000000000E+0
0.00000000000000E+0
   PlNSMass                 5      81     1.00000000000000E+3
0.00000000000000E+0      0.00000000000000E+0      0.00000000000000E+0
0.00000000000000E+0
   PlNSMass                 5      82     1.00000000000000E+3
0.00000000000000E+0      0.00000000000000E+0      0.00000000000000E+0
0.00000000000000E+0
   PlNSMass                 5      83     1.00000000000000E+3
0.00000000000000E+0      0.00000000000000E+0      0.00000000000000E+0
0.00000000000000E+0
   PlNSMass                 5      84     1.00000000000000E+3
0.00000000000000E+0      0.00000000000000E+0      0.00000000000000E+0
0.00000000000000E+0
   PlNSMass                 5      85     1.00000000000000E+3
0.00000000000000E+0      0.00000000000000E+0      0.00000000000000E+0
0.00000000000000E+0
   PlNSMass                 5      86     1.00000000000000E+3
0.00000000000000E+0      0.00000000000000E+0      0.00000000000000E+0
0.00000000000000E+0
   PlNSMass                 5      87     1.00000000000000E+3
0.00000000000000E+0      0.00000000000000E+0      0.00000000000000E+0
0.00000000000000E+0
   PlNSMass                 5      88     1.00000000000000E+3
0.00000000000000E+0      0.00000000000000E+0      0.00000000000000E+0
0.00000000000000E+0
   PlNSMass                 5      89     1.00000000000000E+3
0.00000000000000E+0      0.00000000000000E+0      0.00000000000000E+0
0.00000000000000E+0
   PlNSMass                 5      90     1.00000000000000E+3
0.00000000000000E+0      0.00000000000000E+0      0.00000000000000E+0
0.00000000000000E+0
   PlNSMass                 5      91     1.00000000000000E+3
0.00000000000000E+0      0.00000000000000E+0      0.00000000000000E+0
0.00000000000000E+0
   PlNSMass                 5      92     1.00000000000000E+3
0.00000000000000E+0      0.00000000000000E+0      0.00000000000000E+0
0.00000000000000E+0
   PlNSMass                 5      93     1.00000000000000E+3
0.00000000000000E+0      0.00000000000000E+0      0.00000000000000E+0
0.00000000000000E+0
   PlNSMass                 5      94     1.00000000000000E+3
0.00000000000000E+0      0.00000000000000E+0      0.00000000000000E+0
0.00000000000000E+0
   PlNSMass                 5      95     1.00000000000000E+3
0.00000000000000E+0      0.00000000000000E+0      0.00000000000000E+0
0.00000000000000E+0
   PlNSMass                 5      96     1.00000000000000E+3
0.00000000000000E+0      0.00000000000000E+0      0.00000000000000E+0
0.00000000000000E+0
   PlNSMass                 5      97     1.00000000000000E+3
0.00000000000000E+0      0.00000000000000E+0      0.00000000000000E+0
0.00000000000000E+0
```

```
   PlNSMass                 5      98     1.00000000000000E+3
0.00000000000000E+0      0.00000000000000E+0      0.00000000000000E+0
0.00000000000000E+0
   PlNSMass                 5      99     1.00000000000000E+3
0.00000000000000E+0      0.00000000000000E+0      0.00000000000000E+0
0.00000000000000E+0
   PlNSMass                 5     100     1.00000000000000E+3
0.00000000000000E+0      0.00000000000000E+0      0.00000000000000E+0
0.00000000000000E+0
   PlNSMass                 5     101     1.00000000000000E+3
0.00000000000000E+0      0.00000000000000E+0      0.00000000000000E+0
0.00000000000000E+0
   PlNSMass                 5     102     1.00000000000000E+3
0.00000000000000E+0      0.00000000000000E+0      0.00000000000000E+0
0.00000000000000E+0
   PlNSMass                 5     103     1.00000000000000E+3
0.00000000000000E+0      0.00000000000000E+0      0.00000000000000E+0
0.00000000000000E+0
   PlNSMass                 5     104     1.00000000000000E+3
0.00000000000000E+0      0.00000000000000E+0      0.00000000000000E+0
0.00000000000000E+0
   PlNSMass                 5     105     1.00000000000000E+3
0.00000000000000E+0      0.00000000000000E+0      0.00000000000000E+0
0.00000000000000E+0
   PlNSMass                 5     106     1.00000000000000E+3
0.00000000000000E+0      0.00000000000000E+0      0.00000000000000E+0
0.00000000000000E+0
   PlNSMass                 5     107     1.00000000000000E+3
0.00000000000000E+0      0.00000000000000E+0      0.00000000000000E+0
0.00000000000000E+0
   PlNSMass                 5     108     1.00000000000000E+3
0.00000000000000E+0      0.00000000000000E+0      0.00000000000000E+0
0.00000000000000E+0
   PlNSMass                 5     109     1.00000000000000E+3
0.00000000000000E+0      0.00000000000000E+0      0.00000000000000E+0
0.00000000000000E+0
   PlNSMass                 5     110     1.00000000000000E+3
0.00000000000000E+0      0.00000000000000E+0      0.00000000000000E+0
0.00000000000000E+0
   PlNSMass                 5     111     1.00000000000000E+3
0.00000000000000E+0      0.00000000000000E+0      0.00000000000000E+0
0.00000000000000E+0
   PlNSMass                 5     112     1.00000000000000E+3
0.00000000000000E+0      0.00000000000000E+0      0.00000000000000E+0
0.00000000000000E+0
   PlNSMass                 5     113     1.00000000000000E+3
0.00000000000000E+0      0.00000000000000E+0      0.00000000000000E+0
0.00000000000000E+0
   PlNSMass                 5     114     1.00000000000000E+3
0.00000000000000E+0      0.00000000000000E+0      0.00000000000000E+0
0.00000000000000E+0
   PlNSMass                 5     115     1.00000000000000E+3
0.00000000000000E+0      0.00000000000000E+0      0.00000000000000E+0
0.00000000000000E+0
```

```
   PlNSMass                 5     116     1.00000000000000E+3
0.00000000000000E+0      0.00000000000000E+0      0.00000000000000E+0
0.00000000000000E+0
   PlNSMass                 5     117     1.00000000000000E+3
0.00000000000000E+0      0.00000000000000E+0      0.00000000000000E+0
0.00000000000000E+0
   PlNSMass                 5     118     1.00000000000000E+3
0.00000000000000E+0      0.00000000000000E+0      0.00000000000000E+0
0.00000000000000E+0
   PlNSMass                 5     119     1.00000000000000E+3
0.00000000000000E+0      0.00000000000000E+0      0.00000000000000E+0
0.00000000000000E+0
   PlNSMass                 5     120     1.00000000000000E+3
0.00000000000000E+0      0.00000000000000E+0      0.00000000000000E+0
0.00000000000000E+0
   PlNSMass                 5     121     1.00000000000000E+3
0.00000000000000E+0      0.00000000000000E+0      0.00000000000000E+0
0.00000000000000E+0
   PlNSMass                 5     122     1.00000000000000E+3
0.00000000000000E+0      0.00000000000000E+0      0.00000000000000E+0
0.00000000000000E+0
   PlNSMass                 5     123     1.00000000000000E+3
0.00000000000000E+0      0.00000000000000E+0      0.00000000000000E+0
0.00000000000000E+0
   PlNSMass                 5     124     1.00000000000000E+3
0.00000000000000E+0      0.00000000000000E+0      0.00000000000000E+0
0.00000000000000E+0
   PlNSMass                 5     125     1.00000000000000E+3
0.00000000000000E+0      0.00000000000000E+0      0.00000000000000E+0
0.00000000000000E+0
   PlNSMass                 5     126     1.00000000000000E+3
0.00000000000000E+0      0.00000000000000E+0      0.00000000000000E+0
0.00000000000000E+0
   PlNSMass                 5     127     1.00000000000000E+3
0.00000000000000E+0      0.00000000000000E+0      0.00000000000000E+0
0.00000000000000E+0
   PlNSMass                 5     128     1.00000000000000E+3
0.00000000000000E+0      0.00000000000000E+0      0.00000000000000E+0
0.00000000000000E+0
   PlNSMass                 5     129     1.00000000000000E+3
0.00000000000000E+0      0.00000000000000E+0      0.00000000000000E+0
0.00000000000000E+0
   PlNSMass                 5     130     1.00000000000000E+3
0.00000000000000E+0      0.00000000000000E+0      0.00000000000000E+0
0.00000000000000E+0
   PlNSMass                 5     131     1.00000000000000E+3
0.00000000000000E+0      0.00000000000000E+0      0.00000000000000E+0
0.00000000000000E+0
   PlNSMass                 5     132     1.00000000000000E+3
0.00000000000000E+0      0.00000000000000E+0      0.00000000000000E+0
0.00000000000000E+0
   PlNSMass                 5     133     1.00000000000000E+3
0.00000000000000E+0      0.00000000000000E+0      0.00000000000000E+0
0.00000000000000E+0
```

```
   PlNSMass                 5     134     1.00000000000000E+3
0.00000000000000E+0      0.00000000000000E+0      0.00000000000000E+0
0.00000000000000E+0
   PlNSMass                 5     135     1.00000000000000E+3
0.00000000000000E+0      0.00000000000000E+0      0.00000000000000E+0
0.00000000000000E+0
   PlNSMass                 5     136     1.00000000000000E+3
0.00000000000000E+0      0.00000000000000E+0      0.00000000000000E+0
0.00000000000000E+0
   PlNSMass                 5     137     1.00000000000000E+3
0.00000000000000E+0      0.00000000000000E+0      0.00000000000000E+0
0.00000000000000E+0
   PlNSMass                 5     138     1.00000000000000E+3
0.00000000000000E+0      0.00000000000000E+0      0.00000000000000E+0
0.00000000000000E+0
   PlNSMass                 5     139     1.00000000000000E+3
0.00000000000000E+0      0.00000000000000E+0      0.00000000000000E+0
0.00000000000000E+0
   PlNSMass                 5     140     1.00000000000000E+3
0.00000000000000E+0      0.00000000000000E+0      0.00000000000000E+0
0.00000000000000E+0
   PlNSMass                 5     141     1.00000000000000E+3
0.00000000000000E+0      0.00000000000000E+0      0.00000000000000E+0
0.00000000000000E+0
   PlNSMass                 5     142     1.00000000000000E+3
0.00000000000000E+0      0.00000000000000E+0      0.00000000000000E+0
0.00000000000000E+0
   PlNSMass                 5     143     1.00000000000000E+3
0.00000000000000E+0      0.00000000000000E+0      0.00000000000000E+0
0.00000000000000E+0
   PlNSMass                 5     144     1.00000000000000E+3
0.00000000000000E+0      0.00000000000000E+0      0.00000000000000E+0
0.00000000000000E+0
   PlNSMass                 5     145     1.00000000000000E+3
0.00000000000000E+0      0.00000000000000E+0      0.00000000000000E+0
0.00000000000000E+0
   PlNSMass                 5     146     1.00000000000000E+3
0.00000000000000E+0      0.00000000000000E+0      0.00000000000000E+0
0.00000000000000E+0
   PlNSMass                 5     147     1.00000000000000E+3
0.00000000000000E+0      0.00000000000000E+0      0.00000000000000E+0
0.00000000000000E+0
   PlNSMass                 5     148     1.00000000000000E+3
0.00000000000000E+0      0.00000000000000E+0      0.00000000000000E+0
0.00000000000000E+0
   PlNSMass                 5     149     1.00000000000000E+3
0.00000000000000E+0      0.00000000000000E+0      0.00000000000000E+0
0.00000000000000E+0
   PlNSMass                 5     150     1.00000000000000E+3
0.00000000000000E+0      0.00000000000000E+0      0.00000000000000E+0
0.00000000000000E+0
   PlNSMass                 5     151     1.00000000000000E+3
0.00000000000000E+0      0.00000000000000E+0      0.00000000000000E+0
0.00000000000000E+0
```

```
   PlNSMass                 5     152     1.00000000000000E+3
0.00000000000000E+0      0.00000000000000E+0      0.00000000000000E+0
0.00000000000000E+0
   PlNSMass                 5     153     1.00000000000000E+3
0.00000000000000E+0      0.00000000000000E+0      0.00000000000000E+0
0.00000000000000E+0
   PlNSMass                 5     154     1.00000000000000E+3
0.00000000000000E+0      0.00000000000000E+0      0.00000000000000E+0
0.00000000000000E+0
   PlNSMass                 5     155     1.00000000000000E+3
0.00000000000000E+0      0.00000000000000E+0      0.00000000000000E+0
0.00000000000000E+0
   PlNSMass                 5     156     1.00000000000000E+3
0.00000000000000E+0      0.00000000000000E+0      0.00000000000000E+0
0.00000000000000E+0
   PlNSMass                 5     157     1.00000000000000E+3
0.00000000000000E+0      0.00000000000000E+0      0.00000000000000E+0
0.00000000000000E+0
   PlNSMass                 5     158     1.00000000000000E+3
0.00000000000000E+0      0.00000000000000E+0      0.00000000000000E+0
0.00000000000000E+0
   PlNSMass                 5     159     1.00000000000000E+3
0.00000000000000E+0      0.00000000000000E+0      0.00000000000000E+0
0.00000000000000E+0
   PlNSMass                 5     160     1.00000000000000E+3
0.00000000000000E+0      0.00000000000000E+0      0.00000000000000E+0
0.00000000000000E+0
   PlNSMass                 5     161     1.00000000000000E+3
0.00000000000000E+0      0.00000000000000E+0      0.00000000000000E+0
0.00000000000000E+0
   PlNSMass                 5     162     1.00000000000000E+3
0.00000000000000E+0      0.00000000000000E+0      0.00000000000000E+0
0.00000000000000E+0
   PlNSMass                 5     163     1.00000000000000E+3
0.00000000000000E+0      0.00000000000000E+0      0.00000000000000E+0
0.00000000000000E+0
   PlNSMass                 5     164     1.00000000000000E+3
0.00000000000000E+0      0.00000000000000E+0      0.00000000000000E+0
0.00000000000000E+0
   PlNSMass                 5     165     1.00000000000000E+3
0.00000000000000E+0      0.00000000000000E+0      0.00000000000000E+0
0.00000000000000E+0
   PlNSMass                 5     166     1.00000000000000E+3
0.00000000000000E+0      0.00000000000000E+0      0.00000000000000E+0
0.00000000000000E+0
   PlNSMass                 5     167     1.00000000000000E+3
0.00000000000000E+0      0.00000000000000E+0      0.00000000000000E+0
0.00000000000000E+0
   PlNSMass                 5     168     1.00000000000000E+3
0.00000000000000E+0      0.00000000000000E+0      0.00000000000000E+0
0.00000000000000E+0
   PlNSMass                 5     281     1.00000000000000E+3
0.00000000000000E+0      0.00000000000000E+0      0.00000000000000E+0
0.00000000000000E+0
```

```
   PlNSMass                 5     282     1.00000000000000E+3
0.00000000000000E+0      0.00000000000000E+0      0.00000000000000E+0
0.00000000000000E+0
   PlNSMass                 5     283     1.00000000000000E+3
0.00000000000000E+0      0.00000000000000E+0      0.00000000000000E+0
0.00000000000000E+0
   PlNSMass                 5     284     1.00000000000000E+3
0.00000000000000E+0      0.00000000000000E+0      0.00000000000000E+0
0.00000000000000E+0
   PlNSMass                 5     285     1.00000000000000E+3
0.00000000000000E+0      0.00000000000000E+0      0.00000000000000E+0
0.00000000000000E+0
   PlNSMass                 5     286     1.00000000000000E+3
0.00000000000000E+0      0.00000000000000E+0      0.00000000000000E+0
0.00000000000000E+0
   PlNSMass                 5     287     1.00000000000000E+3
0.00000000000000E+0      0.00000000000000E+0      0.00000000000000E+0
0.00000000000000E+0
   PlNSMass                 5     288     1.00000000000000E+3
0.00000000000000E+0      0.00000000000000E+0      0.00000000000000E+0
0.00000000000000E+0
   PlNSMass                 5     289     1.00000000000000E+3
0.00000000000000E+0      0.00000000000000E+0      0.00000000000000E+0
0.00000000000000E+0
   PlNSMass                 5     290     1.00000000000000E+3
0.00000000000000E+0      0.00000000000000E+0      0.00000000000000E+0
0.00000000000000E+0
   PlNSMass                 5     291     1.00000000000000E+3
0.00000000000000E+0      0.00000000000000E+0      0.00000000000000E+0
0.00000000000000E+0
   PlNSMass                 5     292     1.00000000000000E+3
0.00000000000000E+0      0.00000000000000E+0      0.00000000000000E+0
0.00000000000000E+0
   PlNSMass                 5     293     1.00000000000000E+3
0.00000000000000E+0      0.00000000000000E+0      0.00000000000000E+0
0.00000000000000E+0
   PlNSMass                 5     294     1.00000000000000E+3
0.00000000000000E+0      0.00000000000000E+0      0.00000000000000E+0
0.00000000000000E+0
   PlNSMass                 5     295     1.00000000000000E+3
0.00000000000000E+0      0.00000000000000E+0      0.00000000000000E+0
0.00000000000000E+0
   PlNSMass                 5     296     1.00000000000000E+3
0.00000000000000E+0      0.00000000000000E+0      0.00000000000000E+0
0.00000000000000E+0
   PlNSMass                 5     297     1.00000000000000E+3
0.00000000000000E+0      0.00000000000000E+0      0.00000000000000E+0
0.00000000000000E+0
   PlNSMass                 5     298     1.00000000000000E+3
0.00000000000000E+0      0.00000000000000E+0      0.00000000000000E+0
0.00000000000000E+0
   PlNSMass                 5     299     1.00000000000000E+3
0.00000000000000E+0      0.00000000000000E+0      0.00000000000000E+0
0.00000000000000E+0
```

```
   PlNSMass                 5     300     1.00000000000000E+3
0.00000000000000E+0      0.00000000000000E+0      0.00000000000000E+0
0.00000000000000E+0
   PlNSMass                 5     301     1.00000000000000E+3
0.00000000000000E+0      0.00000000000000E+0      0.00000000000000E+0
0.00000000000000E+0
   PlNSMass                 5     302     1.00000000000000E+3
0.00000000000000E+0      0.00000000000000E+0      0.00000000000000E+0
0.00000000000000E+0
   PlNSMass                 5     303     1.00000000000000E+3
0.00000000000000E+0      0.00000000000000E+0      0.00000000000000E+0
0.00000000000000E+0
   PlNSMass                 5     304     1.00000000000000E+3
0.00000000000000E+0      0.00000000000000E+0      0.00000000000000E+0
0.00000000000000E+0
   PlNSMass                 5     305     1.00000000000000E+3
0.00000000000000E+0      0.00000000000000E+0      0.00000000000000E+0
0.00000000000000E+0
   PlNSMass                 5     306     1.00000000000000E+3
0.00000000000000E+0      0.00000000000000E+0      0.00000000000000E+0
0.00000000000000E+0
   PlNSMass                 5     307     1.00000000000000E+3
0.00000000000000E+0      0.00000000000000E+0      0.00000000000000E+0
0.00000000000000E+0
   PlNSMass                 5     308     1.00000000000000E+3
0.00000000000000E+0      0.00000000000000E+0      0.00000000000000E+0
0.00000000000000E+0
   PlNSMass                 5     309     1.00000000000000E+3
0.00000000000000E+0      0.00000000000000E+0      0.00000000000000E+0
0.00000000000000E+0
   PlNSMass                 5     310     1.00000000000000E+3
0.00000000000000E+0      0.00000000000000E+0      0.00000000000000E+0
0.00000000000000E+0
   PlNSMass                 5     311     1.00000000000000E+3
0.00000000000000E+0      0.00000000000000E+0      0.00000000000000E+0
0.00000000000000E+0
   PlNSMass                 5     312     1.00000000000000E+3
0.00000000000000E+0      0.00000000000000E+0      0.00000000000000E+0
0.00000000000000E+0
   PlNSMass                 5     313     1.00000000000000E+3
0.00000000000000E+0      0.00000000000000E+0      0.00000000000000E+0
0.00000000000000E+0
   PlNSMass                 5     314     1.00000000000000E+3
0.00000000000000E+0      0.00000000000000E+0      0.00000000000000E+0
0.00000000000000E+0
   PlNSMass                 5     315     1.00000000000000E+3
0.00000000000000E+0      0.00000000000000E+0      0.00000000000000E+0
0.00000000000000E+0
   PlNSMass                 5     316     1.00000000000000E+3
0.00000000000000E+0      0.00000000000000E+0      0.00000000000000E+0
0.00000000000000E+0
   PlNSMass                 5     317     1.00000000000000E+3
0.00000000000000E+0      0.00000000000000E+0      0.00000000000000E+0
0.00000000000000E+0
```

```
   PlNSMass                 5     318     1.00000000000000E+3
0.00000000000000E+0      0.00000000000000E+0      0.00000000000000E+0
0.00000000000000E+0
   PlNSMass                 5     319     1.00000000000000E+3
0.00000000000000E+0      0.00000000000000E+0      0.00000000000000E+0
0.00000000000000E+0
   PlNSMass                 5     320     1.00000000000000E+3
0.00000000000000E+0      0.00000000000000E+0      0.00000000000000E+0
0.00000000000000E+0
   PlNSMass                 5     321     1.00000000000000E+3
0.00000000000000E+0      0.00000000000000E+0      0.00000000000000E+0
0.00000000000000E+0
   PlNSMass                 5     322     1.00000000000000E+3
0.00000000000000E+0      0.00000000000000E+0      0.00000000000000E+0
0.00000000000000E+0
   PlNSMass                 5     323     1.00000000000000E+3
0.00000000000000E+0      0.00000000000000E+0      0.00000000000000E+0
0.00000000000000E+0
   PlNSMass                 5     324     1.00000000000000E+3
0.00000000000000E+0      0.00000000000000E+0      0.00000000000000E+0
0.00000000000000E+0
   PlNSMass                 5     325     1.00000000000000E+3
0.00000000000000E+0      0.00000000000000E+0      0.00000000000000E+0
0.00000000000000E+0
   PlNSMass                 5     326     1.00000000000000E+3
0.00000000000000E+0      0.00000000000000E+0      0.00000000000000E+0
0.00000000000000E+0
   PlNSMass                 5     327     1.00000000000000E+3
0.00000000000000E+0      0.00000000000000E+0      0.00000000000000E+0
0.00000000000000E+0
   PlNSMass                 5     328     1.00000000000000E+3
0.00000000000000E+0      0.00000000000000E+0      0.00000000000000E+0
0.00000000000000E+0
   PlNSMass                 5     329     1.00000000000000E+3
0.00000000000000E+0      0.00000000000000E+0      0.00000000000000E+0
0.00000000000000E+0
   PlNSMass                 5     330     1.00000000000000E+3
0.00000000000000E+0      0.00000000000000E+0      0.00000000000000E+0
0.00000000000000E+0
   PlNSMass                 5     331     1.00000000000000E+3
0.00000000000000E+0      0.00000000000000E+0      0.00000000000000E+0
0.00000000000000E+0
   PlNSMass                 5     332     1.00000000000000E+3
0.00000000000000E+0      0.00000000000000E+0      0.00000000000000E+0
0.00000000000000E+0
   PlNSMass                 5     333     1.00000000000000E+3
0.00000000000000E+0      0.00000000000000E+0      0.00000000000000E+0
0.00000000000000E+0
   PlNSMass                 5     334     1.00000000000000E+3
0.00000000000000E+0      0.00000000000000E+0      0.00000000000000E+0
0.00000000000000E+0
   PlNSMass                 5     335     1.00000000000000E+3
0.00000000000000E+0      0.00000000000000E+0      0.00000000000000E+0
0.00000000000000E+0
```

```
   PlNSMass                 5     336     1.00000000000000E+3
0.00000000000000E+0      0.00000000000000E+0      0.00000000000000E+0
0.00000000000000E+0

/ ____________________________________________________________________________
/ BEAM GLOBAL DISTRIBUTED LOADS
/ Q01 - Carico Neve
   BmDistLoadG              6      13      Z      1    -2.37000000000000E+0
-2.37000000000000E+0      0.00000000000000E+0      0.00000000000000E+0
0.00000000000000E+0      0.00000000000000E+0
   BmDistLoadG              6      14      Z      1    -4.74000000000000E+0
-4.74000000000000E+0      0.00000000000000E+0      0.00000000000000E+0
0.00000000000000E+0      0.00000000000000E+0
   BmDistLoadG              6      15      Z      1    -4.74000000000000E+0
-4.74000000000000E+0      0.00000000000000E+0      0.00000000000000E+0
0.00000000000000E+0      0.00000000000000E+0
   BmDistLoadG              6      16      Z      1    -4.74000000000000E+0
-4.74000000000000E+0      0.00000000000000E+0      0.00000000000000E+0
0.00000000000000E+0      0.00000000000000E+0
   BmDistLoadG              6      17      Z      1    -4.74000000000000E+0
-4.74000000000000E+0      0.00000000000000E+0      0.00000000000000E+0
0.00000000000000E+0      0.00000000000000E+0
   BmDistLoadG              6      18      Z      1    -4.74000000000000E+0
-4.74000000000000E+0      0.00000000000000E+0      0.00000000000000E+0
0.00000000000000E+0      0.00000000000000E+0
   BmDistLoadG              6      19      Z      1    -4.74000000000000E+0
-4.74000000000000E+0      0.00000000000000E+0      0.00000000000000E+0
0.00000000000000E+0      0.00000000000000E+0
   BmDistLoadG              6      20      Z      1    -4.74000000000000E+0
-4.74000000000000E+0      0.00000000000000E+0      0.00000000000000E+0
0.00000000000000E+0      0.00000000000000E+0
   BmDistLoadG              6      21      Z      1    -4.74000000000000E+0
-4.74000000000000E+0      0.00000000000000E+0      0.00000000000000E+0
0.00000000000000E+0      0.00000000000000E+0
   BmDistLoadG              6      22      Z      1    -2.37000000000000E+0
-2.37000000000000E+0      0.00000000000000E+0      0.00000000000000E+0
0.00000000000000E+0      0.00000000000000E+0
   BmDistLoadG              6     164      Z      1    -2.37000000000000E+0
-2.37000000000000E+0      0.00000000000000E+0      0.00000000000000E+0
0.00000000000000E+0      0.00000000000000E+0
   BmDistLoadG              6     165      Z      1    -2.37000000000000E+0
-2.37000000000000E+0      0.00000000000000E+0      0.00000000000000E+0
0.00000000000000E+0      0.00000000000000E+0
   BmDistLoadG              6     166      Z      1    -2.37000000000000E+0
-2.37000000000000E+0      0.00000000000000E+0      0.00000000000000E+0
0.00000000000000E+0      0.00000000000000E+0
   BmDistLoadG              6     167      Z      1    -2.37000000000000E+0
-2.37000000000000E+0      0.00000000000000E+0      0.00000000000000E+0
0.00000000000000E+0      0.00000000000000E+0
   BmDistLoadG              6     168      Z      1    -2.37000000000000E+0
-2.37000000000000E+0      0.00000000000000E+0      0.00000000000000E+0
0.00000000000000E+0      0.00000000000000E+0
   BmDistLoadG              6     169      Z      1    -2.37000000000000E+0
-2.37000000000000E+0      0.00000000000000E+0      0.00000000000000E+0
```

```
0.00000000000000E+0       0.00000000000000E+0
   BmDistLoadG               6      170       Z       1    -2.37000000000000E+0
-2.37000000000000E+0       0.00000000000000E+0       0.00000000000000E+0
0.00000000000000E+0       0.00000000000000E+0
   BmDistLoadG               6      171       Z       1    -2.37000000000000E+0
-2.37000000000000E+0       0.00000000000000E+0       0.00000000000000E+0
0.00000000000000E+0       0.00000000000000E+0
   BmDistLoadG               6      172       Z       1    -2.37000000000000E+0
-2.37000000000000E+0       0.00000000000000E+0       0.00000000000000E+0
0.00000000000000E+0       0.00000000000000E+0
   BmDistLoadG               6      173       Z       1    -2.37000000000000E+0
-2.37000000000000E+0       0.00000000000000E+0       0.00000000000000E+0
0.00000000000000E+0       0.00000000000000E+0
   BmDistLoadG               6      174       Z       1    -2.37000000000000E+0
-2.37000000000000E+0       0.00000000000000E+0       0.00000000000000E+0
0.00000000000000E+0       0.00000000000000E+0
   BmDistLoadG               6      175       Z       1    -2.37000000000000E+0
-2.37000000000000E+0       0.00000000000000E+0       0.00000000000000E+0
0.00000000000000E+0       0.00000000000000E+0
   BmDistLoadG               6      176       Z       1    -2.37000000000000E+0
-2.37000000000000E+0       0.00000000000000E+0       0.00000000000000E+0
0.00000000000000E+0       0.00000000000000E+0
   BmDistLoadG               6      177       Z       1    -2.37000000000000E+0
-2.37000000000000E+0       0.00000000000000E+0       0.00000000000000E+0
0.00000000000000E+0       0.00000000000000E+0
   BmDistLoadG               6      178       Z       1    -2.37000000000000E+0
-2.37000000000000E+0       0.00000000000000E+0       0.00000000000000E+0
0.00000000000000E+0       0.00000000000000E+0
   BmDistLoadG               6      179       Z       1    -2.37000000000000E+0
-2.37000000000000E+0       0.00000000000000E+0       0.00000000000000E+0
0.00000000000000E+0       0.00000000000000E+0
   BmDistLoadG               6      180       Z       1    -2.37000000000000E+0
-2.37000000000000E+0       0.00000000000000E+0       0.00000000000000E+0
0.00000000000000E+0       0.00000000000000E+0
   BmDistLoadG               6      181       Z       1    -2.37000000000000E+0
-2.37000000000000E+0       0.00000000000000E+0       0.00000000000000E+0
0.00000000000000E+0       0.00000000000000E+0
   BmDistLoadG               6      182       Z       1    -2.37000000000000E+0
-2.37000000000000E+0       0.00000000000000E+0       0.00000000000000E+0
0.00000000000000E+0       0.00000000000000E+0
   BmDistLoadG               6      183       Z       1    -2.37000000000000E+0
-2.37000000000000E+0       0.00000000000000E+0       0.00000000000000E+0
0.00000000000000E+0       0.00000000000000E+0
   BmDistLoadG               6      184       Z       1    -2.37000000000000E+0
-2.37000000000000E+0       0.00000000000000E+0       0.00000000000000E+0
0.00000000000000E+0       0.00000000000000E+0
   BmDistLoadG               6      185       Z       1    -2.37000000000000E+0
-2.37000000000000E+0       0.00000000000000E+0       0.00000000000000E+0
0.00000000000000E+0       0.00000000000000E+0
   BmDistLoadG               6      186       Z       1    -2.37000000000000E+0
-2.37000000000000E+0       0.00000000000000E+0       0.00000000000000E+0
0.00000000000000E+0       0.00000000000000E+0
   BmDistLoadG               6      187       Z       1    -2.37000000000000E+0
-2.37000000000000E+0       0.00000000000000E+0       0.00000000000000E+0
```

```
0.00000000000000E+0      0.00000000000000E+0
   BmDistLoadG              6     188      Z      1    -2.37000000000000E+0
-2.37000000000000E+0      0.00000000000000E+0      0.00000000000000E+0
0.00000000000000E+0      0.00000000000000E+0
   BmDistLoadG              6     189      Z      1    -2.37000000000000E+0
-2.37000000000000E+0      0.00000000000000E+0      0.00000000000000E+0
0.00000000000000E+0      0.00000000000000E+0
   BmDistLoadG              6     190      Z      1    -2.37000000000000E+0
-2.37000000000000E+0      0.00000000000000E+0      0.00000000000000E+0
0.00000000000000E+0      0.00000000000000E+0
   BmDistLoadG              6     191      Z      1    -2.37000000000000E+0
-2.37000000000000E+0      0.00000000000000E+0      0.00000000000000E+0
0.00000000000000E+0      0.00000000000000E+0
   BmDistLoadG              6     192      Z      1    -2.37000000000000E+0
-2.37000000000000E+0      0.00000000000000E+0      0.00000000000000E+0
0.00000000000000E+0      0.00000000000000E+0
   BmDistLoadG              6     193      Z      1    -2.37000000000000E+0
-2.37000000000000E+0      0.00000000000000E+0      0.00000000000000E+0
0.00000000000000E+0      0.00000000000000E+0
   BmDistLoadG              6     194      Z      1    -2.37000000000000E+0
-2.37000000000000E+0      0.00000000000000E+0      0.00000000000000E+0
0.00000000000000E+0      0.00000000000000E+0
   BmDistLoadG              6     195      Z      1    -2.37000000000000E+0
-2.37000000000000E+0      0.00000000000000E+0      0.00000000000000E+0
0.00000000000000E+0      0.00000000000000E+0
   BmDistLoadG              6     196      Z      1    -2.37000000000000E+0
-2.37000000000000E+0      0.00000000000000E+0      0.00000000000000E+0
0.00000000000000E+0      0.00000000000000E+0
   BmDistLoadG              6     197      Z      1    -2.37000000000000E+0
-2.37000000000000E+0      0.00000000000000E+0      0.00000000000000E+0
0.00000000000000E+0      0.00000000000000E+0
   BmDistLoadG              6     198      Z      1    -2.37000000000000E+0
-2.37000000000000E+0      0.00000000000000E+0      0.00000000000000E+0
0.00000000000000E+0      0.00000000000000E+0
   BmDistLoadG              6     199      Z      1    -2.37000000000000E+0
-2.37000000000000E+0      0.00000000000000E+0      0.00000000000000E+0
0.00000000000000E+0      0.00000000000000E+0
   BmDistLoadG              6     200      Z      1    -2.37000000000000E+0
-2.37000000000000E+0      0.00000000000000E+0      0.00000000000000E+0
0.00000000000000E+0      0.00000000000000E+0
   BmDistLoadG              6     201      Z      1    -2.37000000000000E+0
-2.37000000000000E+0      0.00000000000000E+0      0.00000000000000E+0
0.00000000000000E+0      0.00000000000000E+0
   BmDistLoadG              6     202      Z      1    -2.37000000000000E+0
-2.37000000000000E+0      0.00000000000000E+0      0.00000000000000E+0
0.00000000000000E+0      0.00000000000000E+0
   BmDistLoadG              6     203      Z      1    -2.37000000000000E+0
-2.37000000000000E+0      0.00000000000000E+0      0.00000000000000E+0
0.00000000000000E+0      0.00000000000000E+0
   BmDistLoadG              6     204      Z      1    -2.37000000000000E+0
-2.37000000000000E+0      0.00000000000000E+0      0.00000000000000E+0
0.00000000000000E+0      0.00000000000000E+0
   BmDistLoadG              6     205      Z      1    -2.37000000000000E+0
-2.37000000000000E+0      0.00000000000000E+0      0.00000000000000E+0
```

```
0.00000000000000E+0      0.00000000000000E+0
   BmDistLoadG              6     206      Z      1    -2.37000000000000E+0
-2.37000000000000E+0      0.00000000000000E+0      0.00000000000000E+0
0.00000000000000E+0      0.00000000000000E+0
   BmDistLoadG              6     207      Z      1    -2.37000000000000E+0
-2.37000000000000E+0      0.00000000000000E+0      0.00000000000000E+0
0.00000000000000E+0      0.00000000000000E+0
   BmDistLoadG              6     208      Z      1    -2.37000000000000E+0
-2.37000000000000E+0      0.00000000000000E+0      0.00000000000000E+0
0.00000000000000E+0      0.00000000000000E+0
   BmDistLoadG              6     209      Z      1    -2.37000000000000E+0
-2.37000000000000E+0      0.00000000000000E+0      0.00000000000000E+0
0.00000000000000E+0      0.00000000000000E+0
   BmDistLoadG              6     210      Z      1    -2.37000000000000E+0
-2.37000000000000E+0      0.00000000000000E+0      0.00000000000000E+0
0.00000000000000E+0      0.00000000000000E+0
   BmDistLoadG              6     211      Z      1    -2.37000000000000E+0
-2.37000000000000E+0      0.00000000000000E+0      0.00000000000000E+0
0.00000000000000E+0      0.00000000000000E+0
   BmDistLoadG              6     212      Z      1    -2.37000000000000E+0
-2.37000000000000E+0      0.00000000000000E+0      0.00000000000000E+0
0.00000000000000E+0      0.00000000000000E+0
   BmDistLoadG              6     213      Z      1    -2.37000000000000E+0
-2.37000000000000E+0      0.00000000000000E+0      0.00000000000000E+0
0.00000000000000E+0      0.00000000000000E+0
   BmDistLoadG              6     214      Z      1    -2.37000000000000E+0
-2.37000000000000E+0      0.00000000000000E+0      0.00000000000000E+0
0.00000000000000E+0      0.00000000000000E+0
   BmDistLoadG              6     215      Z      1    -2.37000000000000E+0
-2.37000000000000E+0      0.00000000000000E+0      0.00000000000000E+0
0.00000000000000E+0      0.00000000000000E+0
   BmDistLoadG              6     216      Z      1    -2.37000000000000E+0
-2.37000000000000E+0      0.00000000000000E+0      0.00000000000000E+0
0.00000000000000E+0      0.00000000000000E+0
   BmDistLoadG              6     217      Z      1    -2.37000000000000E+0
-2.37000000000000E+0      0.00000000000000E+0      0.00000000000000E+0
0.00000000000000E+0      0.00000000000000E+0
   BmDistLoadG              6     218      Z      1    -4.74000000000000E+0
-4.74000000000000E+0      0.00000000000000E+0      0.00000000000000E+0
0.00000000000000E+0      0.00000000000000E+0
   BmDistLoadG              6     219      Z      1    -4.74000000000000E+0
-4.74000000000000E+0      0.00000000000000E+0      0.00000000000000E+0
0.00000000000000E+0      0.00000000000000E+0
   BmDistLoadG              6     220      Z      1    -4.74000000000000E+0
-4.74000000000000E+0      0.00000000000000E+0      0.00000000000000E+0
0.00000000000000E+0      0.00000000000000E+0
   BmDistLoadG              6     221      Z      1    -4.74000000000000E+0
-4.74000000000000E+0      0.00000000000000E+0      0.00000000000000E+0
0.00000000000000E+0      0.00000000000000E+0
   BmDistLoadG              6     222      Z      1    -4.74000000000000E+0
-4.74000000000000E+0      0.00000000000000E+0      0.00000000000000E+0
0.00000000000000E+0      0.00000000000000E+0
   BmDistLoadG              6     223      Z      1    -4.74000000000000E+0
-4.74000000000000E+0      0.00000000000000E+0      0.00000000000000E+0
```

```
0.00000000000000E+0      0.00000000000000E+0
   BmDistLoadG              6     224      Z      1    -4.74000000000000E+0
-4.74000000000000E+0      0.00000000000000E+0      0.00000000000000E+0
0.00000000000000E+0      0.00000000000000E+0
   BmDistLoadG              6     225      Z      1    -4.74000000000000E+0
-4.74000000000000E+0      0.00000000000000E+0      0.00000000000000E+0
0.00000000000000E+0      0.00000000000000E+0
   BmDistLoadG              6     226      Z      1    -4.74000000000000E+0
-4.74000000000000E+0      0.00000000000000E+0      0.00000000000000E+0
0.00000000000000E+0      0.00000000000000E+0
   BmDistLoadG              6     227      Z      1    -4.74000000000000E+0
-4.74000000000000E+0      0.00000000000000E+0      0.00000000000000E+0
0.00000000000000E+0      0.00000000000000E+0
   BmDistLoadG              6     228      Z      1    -4.74000000000000E+0
-4.74000000000000E+0      0.00000000000000E+0      0.00000000000000E+0
0.00000000000000E+0      0.00000000000000E+0
   BmDistLoadG              6     229      Z      1    -4.74000000000000E+0
-4.74000000000000E+0      0.00000000000000E+0      0.00000000000000E+0
0.00000000000000E+0      0.00000000000000E+0
   BmDistLoadG              6     230      Z      1    -4.74000000000000E+0
-4.74000000000000E+0      0.00000000000000E+0      0.00000000000000E+0
0.00000000000000E+0      0.00000000000000E+0
   BmDistLoadG              6     231      Z      1    -4.74000000000000E+0
-4.74000000000000E+0      0.00000000000000E+0      0.00000000000000E+0
0.00000000000000E+0      0.00000000000000E+0
   BmDistLoadG              6     232      Z      1    -4.74000000000000E+0
-4.74000000000000E+0      0.00000000000000E+0      0.00000000000000E+0
0.00000000000000E+0      0.00000000000000E+0
   BmDistLoadG              6     233      Z      1    -4.74000000000000E+0
-4.74000000000000E+0      0.00000000000000E+0      0.00000000000000E+0
0.00000000000000E+0      0.00000000000000E+0
   BmDistLoadG              6     234      Z      1    -4.74000000000000E+0
-4.74000000000000E+0      0.00000000000000E+0      0.00000000000000E+0
0.00000000000000E+0      0.00000000000000E+0
   BmDistLoadG              6     235      Z      1    -4.74000000000000E+0
-4.74000000000000E+0      0.00000000000000E+0      0.00000000000000E+0
0.00000000000000E+0      0.00000000000000E+0
   BmDistLoadG              6     236      Z      1    -4.74000000000000E+0
-4.74000000000000E+0      0.00000000000000E+0      0.00000000000000E+0
0.00000000000000E+0      0.00000000000000E+0
   BmDistLoadG              6     237      Z      1    -4.74000000000000E+0
-4.74000000000000E+0      0.00000000000000E+0      0.00000000000000E+0
0.00000000000000E+0      0.00000000000000E+0
   BmDistLoadG              6     238      Z      1    -4.74000000000000E+0
-4.74000000000000E+0      0.00000000000000E+0      0.00000000000000E+0
0.00000000000000E+0      0.00000000000000E+0
   BmDistLoadG              6     239      Z      1    -4.74000000000000E+0
-4.74000000000000E+0      0.00000000000000E+0      0.00000000000000E+0
0.00000000000000E+0      0.00000000000000E+0
   BmDistLoadG              6     240      Z      1    -4.74000000000000E+0
-4.74000000000000E+0      0.00000000000000E+0      0.00000000000000E+0
0.00000000000000E+0      0.00000000000000E+0
   BmDistLoadG              6     241      Z      1    -4.74000000000000E+0
-4.74000000000000E+0      0.00000000000000E+0      0.00000000000000E+0
```

```
0.00000000000000E+0      0.00000000000000E+0
   BmDistLoadG              6     242      Z      1    -4.74000000000000E+0
-4.74000000000000E+0      0.00000000000000E+0     0.00000000000000E+0
0.00000000000000E+0      0.00000000000000E+0
   BmDistLoadG              6     243      Z      1    -4.74000000000000E+0
-4.74000000000000E+0      0.00000000000000E+0     0.00000000000000E+0
0.00000000000000E+0      0.00000000000000E+0
   BmDistLoadG              6     244      Z      1    -4.74000000000000E+0
-4.74000000000000E+0      0.00000000000000E+0     0.00000000000000E+0
0.00000000000000E+0      0.00000000000000E+0
   BmDistLoadG              6     245      Z      1    -4.74000000000000E+0
-4.74000000000000E+0      0.00000000000000E+0     0.00000000000000E+0
0.00000000000000E+0      0.00000000000000E+0
   BmDistLoadG              6     246      Z      1    -4.74000000000000E+0
-4.74000000000000E+0      0.00000000000000E+0     0.00000000000000E+0
0.00000000000000E+0      0.00000000000000E+0
   BmDistLoadG              6     247      Z      1    -4.74000000000000E+0
-4.74000000000000E+0      0.00000000000000E+0     0.00000000000000E+0
0.00000000000000E+0      0.00000000000000E+0
   BmDistLoadG              6     248      Z      1    -4.74000000000000E+0
-4.74000000000000E+0      0.00000000000000E+0     0.00000000000000E+0
0.00000000000000E+0      0.00000000000000E+0
   BmDistLoadG              6     249      Z      1    -4.74000000000000E+0
-4.74000000000000E+0      0.00000000000000E+0     0.00000000000000E+0
0.00000000000000E+0      0.00000000000000E+0
   BmDistLoadG              6     250      Z      1    -4.74000000000000E+0
-4.74000000000000E+0      0.00000000000000E+0     0.00000000000000E+0
0.00000000000000E+0      0.00000000000000E+0
   BmDistLoadG              6     251      Z      1    -4.74000000000000E+0
-4.74000000000000E+0      0.00000000000000E+0     0.00000000000000E+0
0.00000000000000E+0      0.00000000000000E+0
   BmDistLoadG              6     252      Z      1    -4.74000000000000E+0
-4.74000000000000E+0      0.00000000000000E+0     0.00000000000000E+0
0.00000000000000E+0      0.00000000000000E+0
   BmDistLoadG              6     253      Z      1    -4.74000000000000E+0
-4.74000000000000E+0      0.00000000000000E+0     0.00000000000000E+0
0.00000000000000E+0      0.00000000000000E+0
   BmDistLoadG              6     254      Z      1    -4.74000000000000E+0
-4.74000000000000E+0      0.00000000000000E+0     0.00000000000000E+0
0.00000000000000E+0      0.00000000000000E+0
   BmDistLoadG              6     255      Z      1    -4.74000000000000E+0
-4.74000000000000E+0      0.00000000000000E+0     0.00000000000000E+0
0.00000000000000E+0      0.00000000000000E+0
   BmDistLoadG              6     256      Z      1    -4.74000000000000E+0
-4.74000000000000E+0      0.00000000000000E+0     0.00000000000000E+0
0.00000000000000E+0      0.00000000000000E+0
   BmDistLoadG              6     257      Z      1    -4.74000000000000E+0
-4.74000000000000E+0      0.00000000000000E+0     0.00000000000000E+0
0.00000000000000E+0      0.00000000000000E+0
   BmDistLoadG              6     258      Z      1    -4.74000000000000E+0
-4.74000000000000E+0      0.00000000000000E+0     0.00000000000000E+0
0.00000000000000E+0      0.00000000000000E+0
   BmDistLoadG              6     259      Z      1    -4.74000000000000E+0
-4.74000000000000E+0      0.00000000000000E+0     0.00000000000000E+0
```

```
0.00000000000000E+0      0.00000000000000E+0
   BmDistLoadG              6     260       Z       1    -4.74000000000000E+0
-4.74000000000000E+0      0.00000000000000E+0      0.00000000000000E+0
0.00000000000000E+0      0.00000000000000E+0
   BmDistLoadG              6     261       Z       1    -4.74000000000000E+0
-4.74000000000000E+0      0.00000000000000E+0      0.00000000000000E+0
0.00000000000000E+0      0.00000000000000E+0
   BmDistLoadG              6     262       Z       1    -4.74000000000000E+0
-4.74000000000000E+0      0.00000000000000E+0      0.00000000000000E+0
0.00000000000000E+0      0.00000000000000E+0
   BmDistLoadG              6     263       Z       1    -4.74000000000000E+0
-4.74000000000000E+0      0.00000000000000E+0      0.00000000000000E+0
0.00000000000000E+0      0.00000000000000E+0
   BmDistLoadG              6     264       Z       1    -4.74000000000000E+0
-4.74000000000000E+0      0.00000000000000E+0      0.00000000000000E+0
0.00000000000000E+0      0.00000000000000E+0
   BmDistLoadG              6     265       Z       1    -4.74000000000000E+0
-4.74000000000000E+0      0.00000000000000E+0      0.00000000000000E+0
0.00000000000000E+0      0.00000000000000E+0
   BmDistLoadG              6     266       Z       1    -4.74000000000000E+0
-4.74000000000000E+0      0.00000000000000E+0      0.00000000000000E+0
0.00000000000000E+0      0.00000000000000E+0
   BmDistLoadG              6     267       Z       1    -4.74000000000000E+0
-4.74000000000000E+0      0.00000000000000E+0      0.00000000000000E+0
0.00000000000000E+0      0.00000000000000E+0
   BmDistLoadG              6     268       Z       1    -4.74000000000000E+0
-4.74000000000000E+0      0.00000000000000E+0      0.00000000000000E+0
0.00000000000000E+0      0.00000000000000E+0
   BmDistLoadG              6     269       Z       1    -4.74000000000000E+0
-4.74000000000000E+0      0.00000000000000E+0      0.00000000000000E+0
0.00000000000000E+0      0.00000000000000E+0
   BmDistLoadG              6     270       Z       1    -4.74000000000000E+0
-4.74000000000000E+0      0.00000000000000E+0      0.00000000000000E+0
0.00000000000000E+0      0.00000000000000E+0
   BmDistLoadG              6     271       Z       1    -4.74000000000000E+0
-4.74000000000000E+0      0.00000000000000E+0      0.00000000000000E+0
0.00000000000000E+0      0.00000000000000E+0
   BmDistLoadG              6     272       Z       1    -4.74000000000000E+0
-4.74000000000000E+0      0.00000000000000E+0      0.00000000000000E+0
0.00000000000000E+0      0.00000000000000E+0
   BmDistLoadG              6     273       Z       1    -4.74000000000000E+0
-4.74000000000000E+0      0.00000000000000E+0      0.00000000000000E+0
0.00000000000000E+0      0.00000000000000E+0
   BmDistLoadG              6     274       Z       1    -4.74000000000000E+0
-4.74000000000000E+0      0.00000000000000E+0      0.00000000000000E+0
0.00000000000000E+0      0.00000000000000E+0
   BmDistLoadG              6     275       Z       1    -4.74000000000000E+0
-4.74000000000000E+0      0.00000000000000E+0      0.00000000000000E+0
0.00000000000000E+0      0.00000000000000E+0
   BmDistLoadG              6     276       Z       1    -4.74000000000000E+0
-4.74000000000000E+0      0.00000000000000E+0      0.00000000000000E+0
0.00000000000000E+0      0.00000000000000E+0
   BmDistLoadG              6     277       Z       1    -4.74000000000000E+0
-4.74000000000000E+0      0.00000000000000E+0      0.00000000000000E+0
```

0.00000000000000E+0 0.00000000000000E+0
BmDistLoadG 6 278 Z 1 -4.74000000000000E+0
-4.74000000000000E+0 0.00000000000000E+0 0.00000000000000E+0
0.00000000000000E+0 0.00000000000000E+0
BmDistLoadG 6 279 Z 1 -4.74000000000000E+0
-4.74000000000000E+0 0.00000000000000E+0 0.00000000000000E+0
0.00000000000000E+0 0.00000000000000E+0
BmDistLoadG 6 280 Z 1 -4.74000000000000E+0
-4.74000000000000E+0 0.00000000000000E+0 0.00000000000000E+0
0.00000000000000E+0 0.00000000000000E+0
BmDistLoadG 6 281 Z 1 -4.74000000000000E+0
-4.74000000000000E+0 0.00000000000000E+0 0.00000000000000E+0
0.00000000000000E+0 0.00000000000000E+0
BmDistLoadG 6 282 Z 1 -4.74000000000000E+0
-4.74000000000000E+0 0.00000000000000E+0 0.00000000000000E+0
0.00000000000000E+0 0.00000000000000E+0
BmDistLoadG 6 283 Z 1 -4.74000000000000E+0
-4.74000000000000E+0 0.00000000000000E+0 0.00000000000000E+0
0.00000000000000E+0 0.00000000000000E+0
BmDistLoadG 6 284 Z 1 -4.74000000000000E+0
-4.74000000000000E+0 0.00000000000000E+0 0.00000000000000E+0
0.00000000000000E+0 0.00000000000000E+0
BmDistLoadG 6 285 Z 1 -4.74000000000000E+0
-4.74000000000000E+0 0.00000000000000E+0 0.00000000000000E+0
0.00000000000000E+0 0.00000000000000E+0
BmDistLoadG 6 286 Z 1 -4.74000000000000E+0
-4.74000000000000E+0 0.00000000000000E+0 0.00000000000000E+0
0.00000000000000E+0 0.00000000000000E+0
BmDistLoadG 6 287 Z 1 -4.74000000000000E+0
-4.74000000000000E+0 0.00000000000000E+0 0.00000000000000E+0
0.00000000000000E+0 0.00000000000000E+0
BmDistLoadG 6 288 Z 1 -4.74000000000000E+0
-4.74000000000000E+0 0.00000000000000E+0 0.00000000000000E+0
0.00000000000000E+0 0.00000000000000E+0
BmDistLoadG 6 289 Z 1 -4.74000000000000E+0
-4.74000000000000E+0 0.00000000000000E+0 0.00000000000000E+0
0.00000000000000E+0 0.00000000000000E+0
BmDistLoadG 6 290 Z 1 -4.74000000000000E+0
-4.74000000000000E+0 0.00000000000000E+0 0.00000000000000E+0
0.00000000000000E+0 0.00000000000000E+0
BmDistLoadG 6 291 Z 1 -4.74000000000000E+0
-4.74000000000000E+0 0.00000000000000E+0 0.00000000000000E+0
0.00000000000000E+0 0.00000000000000E+0
BmDistLoadG 6 292 Z 1 -4.74000000000000E+0
-4.74000000000000E+0 0.00000000000000E+0 0.00000000000000E+0
0.00000000000000E+0 0.00000000000000E+0
BmDistLoadG 6 293 Z 1 -4.74000000000000E+0
-4.74000000000000E+0 0.00000000000000E+0 0.00000000000000E+0
0.00000000000000E+0 0.00000000000000E+0
BmDistLoadG 6 294 Z 1 -4.74000000000000E+0
-4.74000000000000E+0 0.00000000000000E+0 0.00000000000000E+0
0.00000000000000E+0 0.00000000000000E+0
BmDistLoadG 6 295 Z 1 -4.74000000000000E+0
-4.74000000000000E+0 0.00000000000000E+0 0.00000000000000E+0

```
0.00000000000000E+0      0.00000000000000E+0
   BmDistLoadG              6     296       Z       1    -4.74000000000000E+0
-4.74000000000000E+0      0.00000000000000E+0      0.00000000000000E+0
0.00000000000000E+0      0.00000000000000E+0
   BmDistLoadG              6     297       Z       1    -4.74000000000000E+0
-4.74000000000000E+0      0.00000000000000E+0      0.00000000000000E+0
0.00000000000000E+0      0.00000000000000E+0
   BmDistLoadG              6     298       Z       1    -4.74000000000000E+0
-4.74000000000000E+0      0.00000000000000E+0      0.00000000000000E+0
0.00000000000000E+0      0.00000000000000E+0
   BmDistLoadG              6     299       Z       1    -4.74000000000000E+0
-4.74000000000000E+0      0.00000000000000E+0      0.00000000000000E+0
0.00000000000000E+0      0.00000000000000E+0
   BmDistLoadG              6     300       Z       1    -4.74000000000000E+0
-4.74000000000000E+0      0.00000000000000E+0      0.00000000000000E+0
0.00000000000000E+0      0.00000000000000E+0
   BmDistLoadG              6     301       Z       1    -4.74000000000000E+0
-4.74000000000000E+0      0.00000000000000E+0      0.00000000000000E+0
0.00000000000000E+0      0.00000000000000E+0
   BmDistLoadG              6     302       Z       1    -4.74000000000000E+0
-4.74000000000000E+0      0.00000000000000E+0      0.00000000000000E+0
0.00000000000000E+0      0.00000000000000E+0
   BmDistLoadG              6     303       Z       1    -4.74000000000000E+0
-4.74000000000000E+0      0.00000000000000E+0      0.00000000000000E+0
0.00000000000000E+0      0.00000000000000E+0
   BmDistLoadG              6     304       Z       1    -4.74000000000000E+0
-4.74000000000000E+0      0.00000000000000E+0      0.00000000000000E+0
0.00000000000000E+0      0.00000000000000E+0
   BmDistLoadG              6     305       Z       1    -4.74000000000000E+0
-4.74000000000000E+0      0.00000000000000E+0      0.00000000000000E+0
0.00000000000000E+0      0.00000000000000E+0
   BmDistLoadG              6     306       Z       1    -4.74000000000000E+0
-4.74000000000000E+0      0.00000000000000E+0      0.00000000000000E+0
0.00000000000000E+0      0.00000000000000E+0
   BmDistLoadG              6     307       Z       1    -4.74000000000000E+0
-4.74000000000000E+0      0.00000000000000E+0      0.00000000000000E+0
0.00000000000000E+0      0.00000000000000E+0
   BmDistLoadG              6     308       Z       1    -4.74000000000000E+0
-4.74000000000000E+0      0.00000000000000E+0      0.00000000000000E+0
0.00000000000000E+0      0.00000000000000E+0
   BmDistLoadG              6     309       Z       1    -4.74000000000000E+0
-4.74000000000000E+0      0.00000000000000E+0      0.00000000000000E+0
0.00000000000000E+0      0.00000000000000E+0
   BmDistLoadG              6     310       Z       1    -4.74000000000000E+0
-4.74000000000000E+0      0.00000000000000E+0      0.00000000000000E+0
0.00000000000000E+0      0.00000000000000E+0
   BmDistLoadG              6     311       Z       1    -4.74000000000000E+0
-4.74000000000000E+0      0.00000000000000E+0      0.00000000000000E+0
0.00000000000000E+0      0.00000000000000E+0
   BmDistLoadG              6     312       Z       1    -4.74000000000000E+0
-4.74000000000000E+0      0.00000000000000E+0      0.00000000000000E+0
0.00000000000000E+0      0.00000000000000E+0
   BmDistLoadG              6     313       Z       1    -4.74000000000000E+0
-4.74000000000000E+0      0.00000000000000E+0      0.00000000000000E+0
```

```
0.00000000000000E+0       0.00000000000000E+0
   BmDistLoadG               6     314       Z       1    -4.74000000000000E+0
-4.74000000000000E+0       0.00000000000000E+0       0.00000000000000E+0
0.00000000000000E+0       0.00000000000000E+0
   BmDistLoadG               6     315       Z       1    -4.74000000000000E+0
-4.74000000000000E+0       0.00000000000000E+0       0.00000000000000E+0
0.00000000000000E+0       0.00000000000000E+0
   BmDistLoadG               6     316       Z       1    -4.74000000000000E+0
-4.74000000000000E+0       0.00000000000000E+0       0.00000000000000E+0
0.00000000000000E+0       0.00000000000000E+0
   BmDistLoadG               6     317       Z       1    -4.74000000000000E+0
-4.74000000000000E+0       0.00000000000000E+0       0.00000000000000E+0
0.00000000000000E+0       0.00000000000000E+0
   BmDistLoadG               6     318       Z       1    -4.74000000000000E+0
-4.74000000000000E+0       0.00000000000000E+0       0.00000000000000E+0
0.00000000000000E+0       0.00000000000000E+0
   BmDistLoadG               6     319       Z       1    -4.74000000000000E+0
-4.74000000000000E+0       0.00000000000000E+0       0.00000000000000E+0
0.00000000000000E+0       0.00000000000000E+0
   BmDistLoadG               6     320       Z       1    -4.74000000000000E+0
-4.74000000000000E+0       0.00000000000000E+0       0.00000000000000E+0
0.00000000000000E+0       0.00000000000000E+0
   BmDistLoadG               6     321       Z       1    -4.74000000000000E+0
-4.74000000000000E+0       0.00000000000000E+0       0.00000000000000E+0
0.00000000000000E+0       0.00000000000000E+0
   BmDistLoadG               6     322       Z       1    -4.74000000000000E+0
-4.74000000000000E+0       0.00000000000000E+0       0.00000000000000E+0
0.00000000000000E+0       0.00000000000000E+0
   BmDistLoadG               6     323       Z       1    -4.74000000000000E+0
-4.74000000000000E+0       0.00000000000000E+0       0.00000000000000E+0
0.00000000000000E+0       0.00000000000000E+0
   BmDistLoadG               6     324       Z       1    -4.74000000000000E+0
-4.74000000000000E+0       0.00000000000000E+0       0.00000000000000E+0
0.00000000000000E+0       0.00000000000000E+0
   BmDistLoadG               6     325       Z       1    -4.74000000000000E+0
-4.74000000000000E+0       0.00000000000000E+0       0.00000000000000E+0
0.00000000000000E+0       0.00000000000000E+0
   BmDistLoadG               6     326       Z       1    -4.74000000000000E+0
-4.74000000000000E+0       0.00000000000000E+0       0.00000000000000E+0
0.00000000000000E+0       0.00000000000000E+0
   BmDistLoadG               6     327       Z       1    -4.74000000000000E+0
-4.74000000000000E+0       0.00000000000000E+0       0.00000000000000E+0
0.00000000000000E+0       0.00000000000000E+0
   BmDistLoadG               6     328       Z       1    -4.74000000000000E+0
-4.74000000000000E+0       0.00000000000000E+0       0.00000000000000E+0
0.00000000000000E+0       0.00000000000000E+0
   BmDistLoadG               6     329       Z       1    -4.74000000000000E+0
-4.74000000000000E+0       0.00000000000000E+0       0.00000000000000E+0
0.00000000000000E+0       0.00000000000000E+0
   BmDistLoadG               6     330       Z       1    -4.74000000000000E+0
-4.74000000000000E+0       0.00000000000000E+0       0.00000000000000E+0
0.00000000000000E+0       0.00000000000000E+0
   BmDistLoadG               6     331       Z       1    -4.74000000000000E+0
-4.74000000000000E+0       0.00000000000000E+0       0.00000000000000E+0
```

```
0.00000000000000E+0      0.00000000000000E+0
   BmDistLoadG              6     332       Z       1    -4.74000000000000E+0
-4.74000000000000E+0      0.00000000000000E+0      0.00000000000000E+0
0.00000000000000E+0      0.00000000000000E+0
   BmDistLoadG              6     333       Z       1    -4.74000000000000E+0
-4.74000000000000E+0      0.00000000000000E+0      0.00000000000000E+0
0.00000000000000E+0      0.00000000000000E+0
   BmDistLoadG              6     334       Z       1    -4.74000000000000E+0
-4.74000000000000E+0      0.00000000000000E+0      0.00000000000000E+0
0.00000000000000E+0      0.00000000000000E+0
   BmDistLoadG              6     335       Z       1    -4.74000000000000E+0
-4.74000000000000E+0      0.00000000000000E+0      0.00000000000000E+0
0.00000000000000E+0      0.00000000000000E+0
   BmDistLoadG              6     336       Z       1    -4.74000000000000E+0
-4.74000000000000E+0      0.00000000000000E+0      0.00000000000000E+0
0.00000000000000E+0      0.00000000000000E+0
   BmDistLoadG              6     337       Z       1    -4.74000000000000E+0
-4.74000000000000E+0      0.00000000000000E+0      0.00000000000000E+0
0.00000000000000E+0      0.00000000000000E+0
   BmDistLoadG              6     338       Z       1    -4.74000000000000E+0
-4.74000000000000E+0      0.00000000000000E+0      0.00000000000000E+0
0.00000000000000E+0      0.00000000000000E+0
   BmDistLoadG              6     339       Z       1    -4.74000000000000E+0
-4.74000000000000E+0      0.00000000000000E+0      0.00000000000000E+0
0.00000000000000E+0      0.00000000000000E+0
   BmDistLoadG              6     340       Z       1    -4.74000000000000E+0
-4.74000000000000E+0      0.00000000000000E+0      0.00000000000000E+0
0.00000000000000E+0      0.00000000000000E+0
   BmDistLoadG              6     341       Z       1    -4.74000000000000E+0
-4.74000000000000E+0      0.00000000000000E+0      0.00000000000000E+0
0.00000000000000E+0      0.00000000000000E+0
   BmDistLoadG              6     342       Z       1    -4.74000000000000E+0
-4.74000000000000E+0      0.00000000000000E+0      0.00000000000000E+0
0.00000000000000E+0      0.00000000000000E+0
   BmDistLoadG              6     343       Z       1    -4.74000000000000E+0
-4.74000000000000E+0      0.00000000000000E+0      0.00000000000000E+0
0.00000000000000E+0      0.00000000000000E+0
   BmDistLoadG              6     344       Z       1    -4.74000000000000E+0
-4.74000000000000E+0      0.00000000000000E+0      0.00000000000000E+0
0.00000000000000E+0      0.00000000000000E+0
   BmDistLoadG              6     345       Z       1    -4.74000000000000E+0
-4.74000000000000E+0      0.00000000000000E+0      0.00000000000000E+0
0.00000000000000E+0      0.00000000000000E+0
   BmDistLoadG              6     346       Z       1    -4.74000000000000E+0
-4.74000000000000E+0      0.00000000000000E+0      0.00000000000000E+0
0.00000000000000E+0      0.00000000000000E+0
   BmDistLoadG              6     347       Z       1    -4.74000000000000E+0
-4.74000000000000E+0      0.00000000000000E+0      0.00000000000000E+0
0.00000000000000E+0      0.00000000000000E+0
   BmDistLoadG              6     348       Z       1    -4.74000000000000E+0
-4.74000000000000E+0      0.00000000000000E+0      0.00000000000000E+0
0.00000000000000E+0      0.00000000000000E+0
   BmDistLoadG              6     349       Z       1    -4.74000000000000E+0
-4.74000000000000E+0      0.00000000000000E+0      0.00000000000000E+0
```

```
0.00000000000000E+0      0.00000000000000E+0
   BmDistLoadG              6     350      Z      1    -4.74000000000000E+0
-4.74000000000000E+0      0.00000000000000E+0      0.00000000000000E+0
0.00000000000000E+0      0.00000000000000E+0
   BmDistLoadG              6     351      Z      1    -4.74000000000000E+0
-4.74000000000000E+0      0.00000000000000E+0      0.00000000000000E+0
0.00000000000000E+0      0.00000000000000E+0
   BmDistLoadG              6     352      Z      1    -4.74000000000000E+0
-4.74000000000000E+0      0.00000000000000E+0      0.00000000000000E+0
0.00000000000000E+0      0.00000000000000E+0
   BmDistLoadG              6     353      Z      1    -4.74000000000000E+0
-4.74000000000000E+0      0.00000000000000E+0      0.00000000000000E+0
0.00000000000000E+0      0.00000000000000E+0
   BmDistLoadG              6     354      Z      1    -4.74000000000000E+0
-4.74000000000000E+0      0.00000000000000E+0      0.00000000000000E+0
0.00000000000000E+0      0.00000000000000E+0
   BmDistLoadG              6     355      Z      1    -4.74000000000000E+0
-4.74000000000000E+0      0.00000000000000E+0      0.00000000000000E+0
0.00000000000000E+0      0.00000000000000E+0
   BmDistLoadG              6     356      Z      1    -4.74000000000000E+0
-4.74000000000000E+0      0.00000000000000E+0      0.00000000000000E+0
0.00000000000000E+0      0.00000000000000E+0
   BmDistLoadG              6     357      Z      1    -4.74000000000000E+0
-4.74000000000000E+0      0.00000000000000E+0      0.00000000000000E+0
0.00000000000000E+0      0.00000000000000E+0
   BmDistLoadG              6     358      Z      1    -4.74000000000000E+0
-4.74000000000000E+0      0.00000000000000E+0      0.00000000000000E+0
0.00000000000000E+0      0.00000000000000E+0
   BmDistLoadG              6     359      Z      1    -4.74000000000000E+0
-4.74000000000000E+0      0.00000000000000E+0      0.00000000000000E+0
0.00000000000000E+0      0.00000000000000E+0
   BmDistLoadG              6     360      Z      1    -4.74000000000000E+0
-4.74000000000000E+0      0.00000000000000E+0      0.00000000000000E+0
0.00000000000000E+0      0.00000000000000E+0
   BmDistLoadG              6     361      Z      1    -4.74000000000000E+0
-4.74000000000000E+0      0.00000000000000E+0      0.00000000000000E+0
0.00000000000000E+0      0.00000000000000E+0
   BmDistLoadG              6     362      Z      1    -4.74000000000000E+0
-4.74000000000000E+0      0.00000000000000E+0      0.00000000000000E+0
0.00000000000000E+0      0.00000000000000E+0
   BmDistLoadG              6     363      Z      1    -4.74000000000000E+0
-4.74000000000000E+0      0.00000000000000E+0      0.00000000000000E+0
0.00000000000000E+0      0.00000000000000E+0
   BmDistLoadG              6     364      Z      1    -4.74000000000000E+0
-4.74000000000000E+0      0.00000000000000E+0      0.00000000000000E+0
0.00000000000000E+0      0.00000000000000E+0
   BmDistLoadG              6     365      Z      1    -4.74000000000000E+0
-4.74000000000000E+0      0.00000000000000E+0      0.00000000000000E+0
0.00000000000000E+0      0.00000000000000E+0
   BmDistLoadG              6     366      Z      1    -4.74000000000000E+0
-4.74000000000000E+0      0.00000000000000E+0      0.00000000000000E+0
0.00000000000000E+0      0.00000000000000E+0
   BmDistLoadG              6     367      Z      1    -4.74000000000000E+0
-4.74000000000000E+0      0.00000000000000E+0      0.00000000000000E+0
```

```
0.00000000000000E+0      0.00000000000000E+0
   BmDistLoadG              6     368       Z       1    -4.74000000000000E+0
-4.74000000000000E+0      0.00000000000000E+0      0.00000000000000E+0
0.00000000000000E+0      0.00000000000000E+0
   BmDistLoadG              6     369       Z       1    -4.74000000000000E+0
-4.74000000000000E+0      0.00000000000000E+0      0.00000000000000E+0
0.00000000000000E+0      0.00000000000000E+0
   BmDistLoadG              6     370       Z       1    -4.74000000000000E+0
-4.74000000000000E+0      0.00000000000000E+0      0.00000000000000E+0
0.00000000000000E+0      0.00000000000000E+0
   BmDistLoadG              6     371       Z       1    -4.74000000000000E+0
-4.74000000000000E+0      0.00000000000000E+0      0.00000000000000E+0
0.00000000000000E+0      0.00000000000000E+0
   BmDistLoadG              6     372       Z       1    -4.74000000000000E+0
-4.74000000000000E+0      0.00000000000000E+0      0.00000000000000E+0
0.00000000000000E+0      0.00000000000000E+0
   BmDistLoadG              6     373       Z       1    -4.74000000000000E+0
-4.74000000000000E+0      0.00000000000000E+0      0.00000000000000E+0
0.00000000000000E+0      0.00000000000000E+0
   BmDistLoadG              6     374       Z       1    -4.74000000000000E+0
-4.74000000000000E+0      0.00000000000000E+0      0.00000000000000E+0
0.00000000000000E+0      0.00000000000000E+0
   BmDistLoadG              6     375       Z       1    -4.74000000000000E+0
-4.74000000000000E+0      0.00000000000000E+0      0.00000000000000E+0
0.00000000000000E+0      0.00000000000000E+0
   BmDistLoadG              6     376       Z       1    -4.74000000000000E+0
-4.74000000000000E+0      0.00000000000000E+0      0.00000000000000E+0
0.00000000000000E+0      0.00000000000000E+0
   BmDistLoadG              6     377       Z       1    -4.74000000000000E+0
-4.74000000000000E+0      0.00000000000000E+0      0.00000000000000E+0
0.00000000000000E+0      0.00000000000000E+0
   BmDistLoadG              6     378       Z       1    -4.74000000000000E+0
-4.74000000000000E+0      0.00000000000000E+0      0.00000000000000E+0
0.00000000000000E+0      0.00000000000000E+0
   BmDistLoadG              6     379       Z       1    -4.74000000000000E+0
-4.74000000000000E+0      0.00000000000000E+0      0.00000000000000E+0
0.00000000000000E+0      0.00000000000000E+0
   BmDistLoadG              6     380       Z       1    -4.74000000000000E+0
-4.74000000000000E+0      0.00000000000000E+0      0.00000000000000E+0
0.00000000000000E+0      0.00000000000000E+0
   BmDistLoadG              6     381       Z       1    -4.74000000000000E+0
-4.74000000000000E+0      0.00000000000000E+0      0.00000000000000E+0
0.00000000000000E+0      0.00000000000000E+0
   BmDistLoadG              6     382       Z       1    -4.74000000000000E+0
-4.74000000000000E+0      0.00000000000000E+0      0.00000000000000E+0
0.00000000000000E+0      0.00000000000000E+0
   BmDistLoadG              6     383       Z       1    -4.74000000000000E+0
-4.74000000000000E+0      0.00000000000000E+0      0.00000000000000E+0
0.00000000000000E+0      0.00000000000000E+0
   BmDistLoadG              6     384       Z       1    -4.74000000000000E+0
-4.74000000000000E+0      0.00000000000000E+0      0.00000000000000E+0
0.00000000000000E+0      0.00000000000000E+0
   BmDistLoadG              6     385       Z       1    -4.74000000000000E+0
-4.74000000000000E+0      0.00000000000000E+0      0.00000000000000E+0
```

```
0.00000000000000E+0      0.00000000000000E+0
   BmDistLoadG              6     386      Z       1    -4.74000000000000E+0
-4.74000000000000E+0      0.00000000000000E+0      0.00000000000000E+0
0.00000000000000E+0      0.00000000000000E+0
   BmDistLoadG              6     387      Z       1    -4.74000000000000E+0
-4.74000000000000E+0      0.00000000000000E+0      0.00000000000000E+0
0.00000000000000E+0      0.00000000000000E+0
   BmDistLoadG              6     388      Z       1    -4.74000000000000E+0
-4.74000000000000E+0      0.00000000000000E+0      0.00000000000000E+0
0.00000000000000E+0      0.00000000000000E+0
   BmDistLoadG              6     389      Z       1    -4.74000000000000E+0
-4.74000000000000E+0      0.00000000000000E+0      0.00000000000000E+0
0.00000000000000E+0      0.00000000000000E+0
   BmDistLoadG              6     390      Z       1    -4.74000000000000E+0
-4.74000000000000E+0      0.00000000000000E+0      0.00000000000000E+0
0.00000000000000E+0      0.00000000000000E+0
   BmDistLoadG              6     391      Z       1    -4.74000000000000E+0
-4.74000000000000E+0      0.00000000000000E+0      0.00000000000000E+0
0.00000000000000E+0      0.00000000000000E+0
   BmDistLoadG              6     392      Z       1    -4.74000000000000E+0
-4.74000000000000E+0      0.00000000000000E+0      0.00000000000000E+0
0.00000000000000E+0      0.00000000000000E+0
   BmDistLoadG              6     393      Z       1    -4.74000000000000E+0
-4.74000000000000E+0      0.00000000000000E+0      0.00000000000000E+0
0.00000000000000E+0      0.00000000000000E+0
   BmDistLoadG              6     394      Z       1    -4.74000000000000E+0
-4.74000000000000E+0      0.00000000000000E+0      0.00000000000000E+0
0.00000000000000E+0      0.00000000000000E+0
   BmDistLoadG              6     395      Z       1    -4.74000000000000E+0
-4.74000000000000E+0      0.00000000000000E+0      0.00000000000000E+0
0.00000000000000E+0      0.00000000000000E+0
   BmDistLoadG              6     396      Z       1    -4.74000000000000E+0
-4.74000000000000E+0      0.00000000000000E+0      0.00000000000000E+0
0.00000000000000E+0      0.00000000000000E+0
   BmDistLoadG              6     397      Z       1    -4.74000000000000E+0
-4.74000000000000E+0      0.00000000000000E+0      0.00000000000000E+0
0.00000000000000E+0      0.00000000000000E+0
   BmDistLoadG              6     398      Z       1    -4.74000000000000E+0
-4.74000000000000E+0      0.00000000000000E+0      0.00000000000000E+0
0.00000000000000E+0      0.00000000000000E+0
   BmDistLoadG              6     399      Z       1    -4.74000000000000E+0
-4.74000000000000E+0      0.00000000000000E+0      0.00000000000000E+0
0.00000000000000E+0      0.00000000000000E+0
   BmDistLoadG              6     400      Z       1    -4.74000000000000E+0
-4.74000000000000E+0      0.00000000000000E+0      0.00000000000000E+0
0.00000000000000E+0      0.00000000000000E+0
   BmDistLoadG              6     401      Z       1    -4.74000000000000E+0
-4.74000000000000E+0      0.00000000000000E+0      0.00000000000000E+0
0.00000000000000E+0      0.00000000000000E+0
   BmDistLoadG              6     402      Z       1    -4.74000000000000E+0
-4.74000000000000E+0      0.00000000000000E+0      0.00000000000000E+0
0.00000000000000E+0      0.00000000000000E+0
   BmDistLoadG              6     403      Z       1    -4.74000000000000E+0
-4.74000000000000E+0      0.00000000000000E+0      0.00000000000000E+0
```

```
0.00000000000000E+0      0.00000000000000E+0
   BmDistLoadG              6     404      Z      1    -4.74000000000000E+0
-4.74000000000000E+0      0.00000000000000E+0      0.00000000000000E+0
0.00000000000000E+0      0.00000000000000E+0
   BmDistLoadG              6     405      Z      1    -4.74000000000000E+0
-4.74000000000000E+0      0.00000000000000E+0      0.00000000000000E+0
0.00000000000000E+0      0.00000000000000E+0
   BmDistLoadG              6     406      Z      1    -4.74000000000000E+0
-4.74000000000000E+0      0.00000000000000E+0      0.00000000000000E+0
0.00000000000000E+0      0.00000000000000E+0
   BmDistLoadG              6     407      Z      1    -4.74000000000000E+0
-4.74000000000000E+0      0.00000000000000E+0      0.00000000000000E+0
0.00000000000000E+0      0.00000000000000E+0
   BmDistLoadG              6     408      Z      1    -4.74000000000000E+0
-4.74000000000000E+0      0.00000000000000E+0      0.00000000000000E+0
0.00000000000000E+0      0.00000000000000E+0
   BmDistLoadG              6     409      Z      1    -4.74000000000000E+0
-4.74000000000000E+0      0.00000000000000E+0      0.00000000000000E+0
0.00000000000000E+0      0.00000000000000E+0
   BmDistLoadG              6     410      Z      1    -4.74000000000000E+0
-4.74000000000000E+0      0.00000000000000E+0      0.00000000000000E+0
0.00000000000000E+0      0.00000000000000E+0
   BmDistLoadG              6     411      Z      1    -4.74000000000000E+0
-4.74000000000000E+0      0.00000000000000E+0      0.00000000000000E+0
0.00000000000000E+0      0.00000000000000E+0
   BmDistLoadG              6     412      Z      1    -4.74000000000000E+0
-4.74000000000000E+0      0.00000000000000E+0      0.00000000000000E+0
0.00000000000000E+0      0.00000000000000E+0
   BmDistLoadG              6     413      Z      1    -4.74000000000000E+0
-4.74000000000000E+0      0.00000000000000E+0      0.00000000000000E+0
0.00000000000000E+0      0.00000000000000E+0
   BmDistLoadG              6     414      Z      1    -4.74000000000000E+0
-4.74000000000000E+0      0.00000000000000E+0      0.00000000000000E+0
0.00000000000000E+0      0.00000000000000E+0
   BmDistLoadG              6     415      Z      1    -4.74000000000000E+0
-4.74000000000000E+0      0.00000000000000E+0      0.00000000000000E+0
0.00000000000000E+0      0.00000000000000E+0
   BmDistLoadG              6     416      Z      1    -4.74000000000000E+0
-4.74000000000000E+0      0.00000000000000E+0      0.00000000000000E+0
0.00000000000000E+0      0.00000000000000E+0
   BmDistLoadG              6     417      Z      1    -4.74000000000000E+0
-4.74000000000000E+0      0.00000000000000E+0      0.00000000000000E+0
0.00000000000000E+0      0.00000000000000E+0
   BmDistLoadG              6     418      Z      1    -4.74000000000000E+0
-4.74000000000000E+0      0.00000000000000E+0      0.00000000000000E+0
0.00000000000000E+0      0.00000000000000E+0
   BmDistLoadG              6     419      Z      1    -4.74000000000000E+0
-4.74000000000000E+0      0.00000000000000E+0      0.00000000000000E+0
0.00000000000000E+0      0.00000000000000E+0
   BmDistLoadG              6     420      Z      1    -4.74000000000000E+0
-4.74000000000000E+0      0.00000000000000E+0      0.00000000000000E+0
0.00000000000000E+0      0.00000000000000E+0
   BmDistLoadG              6     421      Z      1    -4.74000000000000E+0
-4.74000000000000E+0      0.00000000000000E+0      0.00000000000000E+0
```

```
0.00000000000000E+0      0.00000000000000E+0
   BmDistLoadG              6     422       Z       1    -4.74000000000000E+0
-4.74000000000000E+0      0.00000000000000E+0      0.00000000000000E+0
0.00000000000000E+0      0.00000000000000E+0
   BmDistLoadG              6     423       Z       1    -4.74000000000000E+0
-4.74000000000000E+0      0.00000000000000E+0      0.00000000000000E+0
0.00000000000000E+0      0.00000000000000E+0
   BmDistLoadG              6     424       Z       1    -4.74000000000000E+0
-4.74000000000000E+0      0.00000000000000E+0      0.00000000000000E+0
0.00000000000000E+0      0.00000000000000E+0
   BmDistLoadG              6     425       Z       1    -4.74000000000000E+0
-4.74000000000000E+0      0.00000000000000E+0      0.00000000000000E+0
0.00000000000000E+0      0.00000000000000E+0
   BmDistLoadG              6     426       Z       1    -4.74000000000000E+0
-4.74000000000000E+0      0.00000000000000E+0      0.00000000000000E+0
0.00000000000000E+0      0.00000000000000E+0
   BmDistLoadG              6     427       Z       1    -4.74000000000000E+0
-4.74000000000000E+0      0.00000000000000E+0      0.00000000000000E+0
0.00000000000000E+0      0.00000000000000E+0
   BmDistLoadG              6     428       Z       1    -4.74000000000000E+0
-4.74000000000000E+0      0.00000000000000E+0      0.00000000000000E+0
0.00000000000000E+0      0.00000000000000E+0
   BmDistLoadG              6     429       Z       1    -4.74000000000000E+0
-4.74000000000000E+0      0.00000000000000E+0      0.00000000000000E+0
0.00000000000000E+0      0.00000000000000E+0
   BmDistLoadG              6     430       Z       1    -4.74000000000000E+0
-4.74000000000000E+0      0.00000000000000E+0      0.00000000000000E+0
0.00000000000000E+0      0.00000000000000E+0
   BmDistLoadG              6     431       Z       1    -4.74000000000000E+0
-4.74000000000000E+0      0.00000000000000E+0      0.00000000000000E+0
0.00000000000000E+0      0.00000000000000E+0
   BmDistLoadG              6     432       Z       1    -4.74000000000000E+0
-4.74000000000000E+0      0.00000000000000E+0      0.00000000000000E+0
0.00000000000000E+0      0.00000000000000E+0
   BmDistLoadG              6     433       Z       1    -4.74000000000000E+0
-4.74000000000000E+0      0.00000000000000E+0      0.00000000000000E+0
0.00000000000000E+0      0.00000000000000E+0
   BmDistLoadG              6     649       Z       1    -2.37000000000000E+0
-2.37000000000000E+0      0.00000000000000E+0      0.00000000000000E+0
0.00000000000000E+0      0.00000000000000E+0
   BmDistLoadG              6     650       Z       1    -2.37000000000000E+0
-2.37000000000000E+0      0.00000000000000E+0      0.00000000000000E+0
0.00000000000000E+0      0.00000000000000E+0
   BmDistLoadG              6     651       Z       1    -2.37000000000000E+0
-2.37000000000000E+0      0.00000000000000E+0      0.00000000000000E+0
0.00000000000000E+0      0.00000000000000E+0
   BmDistLoadG              6     652       Z       1    -2.37000000000000E+0
-2.37000000000000E+0      0.00000000000000E+0      0.00000000000000E+0
0.00000000000000E+0      0.00000000000000E+0
   BmDistLoadG              6     653       Z       1    -4.74000000000000E+0
-4.74000000000000E+0      0.00000000000000E+0      0.00000000000000E+0
0.00000000000000E+0      0.00000000000000E+0
   BmDistLoadG              6     654       Z       1    -4.74000000000000E+0
-4.74000000000000E+0      0.00000000000000E+0      0.00000000000000E+0
```

```
0.00000000000000E+0      0.00000000000000E+0
   BmDistLoadG              6     655      Z      1    -4.74000000000000E+0
-4.74000000000000E+0      0.00000000000000E+0      0.00000000000000E+0
0.00000000000000E+0      0.00000000000000E+0
   BmDistLoadG              6     656      Z      1    -4.74000000000000E+0
-4.74000000000000E+0      0.00000000000000E+0      0.00000000000000E+0
0.00000000000000E+0      0.00000000000000E+0
   BmDistLoadG              6     657      Z      1    -4.74000000000000E+0
-4.74000000000000E+0      0.00000000000000E+0      0.00000000000000E+0
0.00000000000000E+0      0.00000000000000E+0
   BmDistLoadG              6     658      Z      1    -4.74000000000000E+0
-4.74000000000000E+0      0.00000000000000E+0      0.00000000000000E+0
0.00000000000000E+0      0.00000000000000E+0
   BmDistLoadG              6     659      Z      1    -4.74000000000000E+0
-4.74000000000000E+0      0.00000000000000E+0      0.00000000000000E+0
0.00000000000000E+0      0.00000000000000E+0
   BmDistLoadG              6     660      Z      1    -4.74000000000000E+0
-4.74000000000000E+0      0.00000000000000E+0      0.00000000000000E+0
0.00000000000000E+0      0.00000000000000E+0
   BmDistLoadG              6     661      Z      1    -4.74000000000000E+0
-4.74000000000000E+0      0.00000000000000E+0      0.00000000000000E+0
0.00000000000000E+0      0.00000000000000E+0
   BmDistLoadG              6     662      Z      1    -4.74000000000000E+0
-4.74000000000000E+0      0.00000000000000E+0      0.00000000000000E+0
0.00000000000000E+0      0.00000000000000E+0
   BmDistLoadG              6     663      Z      1    -4.74000000000000E+0
-4.74000000000000E+0      0.00000000000000E+0      0.00000000000000E+0
0.00000000000000E+0      0.00000000000000E+0
   BmDistLoadG              6     664      Z      1    -4.74000000000000E+0
-4.74000000000000E+0      0.00000000000000E+0      0.00000000000000E+0
0.00000000000000E+0      0.00000000000000E+0
   BmDistLoadG              6     665      Z      1    -4.74000000000000E+0
-4.74000000000000E+0      0.00000000000000E+0      0.00000000000000E+0
0.00000000000000E+0      0.00000000000000E+0
   BmDistLoadG              6     666      Z      1    -4.74000000000000E+0
-4.74000000000000E+0      0.00000000000000E+0      0.00000000000000E+0
0.00000000000000E+0      0.00000000000000E+0
   BmDistLoadG              6     667      Z      1    -4.74000000000000E+0
-4.74000000000000E+0      0.00000000000000E+0      0.00000000000000E+0
0.00000000000000E+0      0.00000000000000E+0
   BmDistLoadG              6     668      Z      1    -4.74000000000000E+0
-4.74000000000000E+0      0.00000000000000E+0      0.00000000000000E+0
0.00000000000000E+0      0.00000000000000E+0

/ ______________________________________________________________________________
/ BEAM GLOBAL DISTRIBUTED LOADS
/ Q02a - Carico Vento Y+
   BmDistLoadG              7       1      Y      1     1.76000000000000E+0
1.76000000000000E+0      0.00000000000000E+0      0.00000000000000E+0
0.00000000000000E+0      0.00000000000000E+0
   BmDistLoadG              7       2      Y      1     1.76000000000000E+0
1.76000000000000E+0      0.00000000000000E+0      0.00000000000000E+0
0.00000000000000E+0      0.00000000000000E+0
   BmDistLoadG              7       3      Y      1     1.76000000000000E+0
```

```
1.76000000000000E+0      0.00000000000000E+0      0.00000000000000E+0
0.00000000000000E+0      0.00000000000000E+0
   BmDistLoadG              7       4      Y      1     1.76000000000000E+0
1.76000000000000E+0      0.00000000000000E+0      0.00000000000000E+0
0.00000000000000E+0      0.00000000000000E+0
   BmDistLoadG              7       5      Y      1     1.76000000000000E+0
1.76000000000000E+0      0.00000000000000E+0      0.00000000000000E+0
0.00000000000000E+0      0.00000000000000E+0
   BmDistLoadG              7       6      Y      1     1.76000000000000E+0
1.76000000000000E+0      0.00000000000000E+0      0.00000000000000E+0
0.00000000000000E+0      0.00000000000000E+0
   BmDistLoadG              7       7      Y      1     1.76000000000000E+0
1.76000000000000E+0      0.00000000000000E+0      0.00000000000000E+0
0.00000000000000E+0      0.00000000000000E+0
   BmDistLoadG              7       8      Y      1     1.76000000000000E+0
1.76000000000000E+0      0.00000000000000E+0      0.00000000000000E+0
0.00000000000000E+0      0.00000000000000E+0
   BmDistLoadG              7       9      Y      1     1.76000000000000E+0
1.76000000000000E+0      0.00000000000000E+0      0.00000000000000E+0
0.00000000000000E+0      0.00000000000000E+0
   BmDistLoadG              7      10      Y      1     1.76000000000000E+0
1.76000000000000E+0      0.00000000000000E+0      0.00000000000000E+0
0.00000000000000E+0      0.00000000000000E+0
   BmDistLoadG              7      11      Y      1     1.76000000000000E+0
1.76000000000000E+0      0.00000000000000E+0      0.00000000000000E+0
0.00000000000000E+0      0.00000000000000E+0
   BmDistLoadG              7      12      Y      1     1.76000000000000E+0
1.76000000000000E+0      0.00000000000000E+0      0.00000000000000E+0
0.00000000000000E+0      0.00000000000000E+0
   BmDistLoadG              7      13      Z      1     1.15500000000000E+0
1.15500000000000E+0      0.00000000000000E+0      0.00000000000000E+0
0.00000000000000E+0      0.00000000000000E+0
   BmDistLoadG              7      14      Z      1     2.31000000000000E+0
2.31000000000000E+0      0.00000000000000E+0      0.00000000000000E+0
0.00000000000000E+0      0.00000000000000E+0
   BmDistLoadG              7      15      Z      1     2.31000000000000E+0
2.31000000000000E+0      0.00000000000000E+0      0.00000000000000E+0
0.00000000000000E+0      0.00000000000000E+0
   BmDistLoadG              7      16      Z      1     2.31000000000000E+0
2.31000000000000E+0      0.00000000000000E+0      0.00000000000000E+0
0.00000000000000E+0      0.00000000000000E+0
   BmDistLoadG              7      17      Z      1     2.31000000000000E+0
2.31000000000000E+0      0.00000000000000E+0      0.00000000000000E+0
0.00000000000000E+0      0.00000000000000E+0
   BmDistLoadG              7      18      Z      1     2.31000000000000E+0
2.31000000000000E+0      0.00000000000000E+0      0.00000000000000E+0
0.00000000000000E+0      0.00000000000000E+0
   BmDistLoadG              7      19      Z      1     2.31000000000000E+0
2.31000000000000E+0      0.00000000000000E+0      0.00000000000000E+0
0.00000000000000E+0      0.00000000000000E+0
   BmDistLoadG              7      20      Z      1     2.31000000000000E+0
2.31000000000000E+0      0.00000000000000E+0      0.00000000000000E+0
0.00000000000000E+0      0.00000000000000E+0
   BmDistLoadG              7      21      Z      1     2.31000000000000E+0
```

```
2.31000000000000E+0      0.00000000000000E+0      0.00000000000000E+0
0.00000000000000E+0      0.00000000000000E+0
   BmDistLoadG              7      22      Z      1     1.15500000000000E+0
1.15500000000000E+0      0.00000000000000E+0      0.00000000000000E+0
0.00000000000000E+0      0.00000000000000E+0
   BmDistLoadG              7      25      Y      1     1.76000000000000E+0
1.76000000000000E+0      0.00000000000000E+0      0.00000000000000E+0
0.00000000000000E+0      0.00000000000000E+0
   BmDistLoadG              7      26      Y      1     1.76000000000000E+0
1.76000000000000E+0      0.00000000000000E+0      0.00000000000000E+0
0.00000000000000E+0      0.00000000000000E+0
   BmDistLoadG              7      27      Y      1     1.76000000000000E+0
1.76000000000000E+0      0.00000000000000E+0      0.00000000000000E+0
0.00000000000000E+0      0.00000000000000E+0
   BmDistLoadG              7      28      Y      1     1.76000000000000E+0
1.76000000000000E+0      0.00000000000000E+0      0.00000000000000E+0
0.00000000000000E+0      0.00000000000000E+0
   BmDistLoadG              7      29      Y      1     1.76000000000000E+0
1.76000000000000E+0      0.00000000000000E+0      0.00000000000000E+0
0.00000000000000E+0      0.00000000000000E+0
   BmDistLoadG              7      30      Y      1     1.76000000000000E+0
1.76000000000000E+0      0.00000000000000E+0      0.00000000000000E+0
0.00000000000000E+0      0.00000000000000E+0
   BmDistLoadG              7      31      Y      1     1.76000000000000E+0
1.76000000000000E+0      0.00000000000000E+0      0.00000000000000E+0
0.00000000000000E+0      0.00000000000000E+0
   BmDistLoadG              7      32      Y      1     1.76000000000000E+0
1.76000000000000E+0      0.00000000000000E+0      0.00000000000000E+0
0.00000000000000E+0      0.00000000000000E+0
   BmDistLoadG              7      33      Y      1     1.76000000000000E+0
1.76000000000000E+0      0.00000000000000E+0      0.00000000000000E+0
0.00000000000000E+0      0.00000000000000E+0
   BmDistLoadG              7      34      Y      1     1.76000000000000E+0
1.76000000000000E+0      0.00000000000000E+0      0.00000000000000E+0
0.00000000000000E+0      0.00000000000000E+0
   BmDistLoadG              7      35      Y      1     1.76000000000000E+0
1.76000000000000E+0      0.00000000000000E+0      0.00000000000000E+0
0.00000000000000E+0      0.00000000000000E+0
   BmDistLoadG              7      36      Y      1     1.76000000000000E+0
1.76000000000000E+0      0.00000000000000E+0      0.00000000000000E+0
0.00000000000000E+0      0.00000000000000E+0
   BmDistLoadG              7      37      Y      1     1.76000000000000E+0
1.76000000000000E+0      0.00000000000000E+0      0.00000000000000E+0
0.00000000000000E+0      0.00000000000000E+0
   BmDistLoadG              7      38      Y      1     1.76000000000000E+0
1.76000000000000E+0      0.00000000000000E+0      0.00000000000000E+0
0.00000000000000E+0      0.00000000000000E+0
   BmDistLoadG              7      39      Y      1     1.76000000000000E+0
1.76000000000000E+0      0.00000000000000E+0      0.00000000000000E+0
0.00000000000000E+0      0.00000000000000E+0
   BmDistLoadG              7      40      Y      1     1.76000000000000E+0
1.76000000000000E+0      0.00000000000000E+0      0.00000000000000E+0
0.00000000000000E+0      0.00000000000000E+0
   BmDistLoadG              7      41      Y      1     1.76000000000000E+0
```

```
1.76000000000000E+0      0.00000000000000E+0      0.00000000000000E+0
0.00000000000000E+0      0.00000000000000E+0
   BmDistLoadG              7      42      Y      1     1.76000000000000E+0
1.76000000000000E+0      0.00000000000000E+0      0.00000000000000E+0
0.00000000000000E+0      0.00000000000000E+0
   BmDistLoadG              7      43      Y      1     1.76000000000000E+0
1.76000000000000E+0      0.00000000000000E+0      0.00000000000000E+0
0.00000000000000E+0      0.00000000000000E+0
   BmDistLoadG              7      44      Y      1     1.76000000000000E+0
1.76000000000000E+0      0.00000000000000E+0      0.00000000000000E+0
0.00000000000000E+0      0.00000000000000E+0
   BmDistLoadG              7      45      Y      1     1.76000000000000E+0
1.76000000000000E+0      0.00000000000000E+0      0.00000000000000E+0
0.00000000000000E+0      0.00000000000000E+0
   BmDistLoadG              7      46      Y      1     1.76000000000000E+0
1.76000000000000E+0      0.00000000000000E+0      0.00000000000000E+0
0.00000000000000E+0      0.00000000000000E+0
   BmDistLoadG              7      47      Y      1     1.76000000000000E+0
1.76000000000000E+0      0.00000000000000E+0      0.00000000000000E+0
0.00000000000000E+0      0.00000000000000E+0
   BmDistLoadG              7      48      Y      1     1.76000000000000E+0
1.76000000000000E+0      0.00000000000000E+0      0.00000000000000E+0
0.00000000000000E+0      0.00000000000000E+0
   BmDistLoadG              7      49      Y      1     1.76000000000000E+0
1.76000000000000E+0      0.00000000000000E+0      0.00000000000000E+0
0.00000000000000E+0      0.00000000000000E+0
   BmDistLoadG              7      50      Y      1     1.76000000000000E+0
1.76000000000000E+0      0.00000000000000E+0      0.00000000000000E+0
0.00000000000000E+0      0.00000000000000E+0
   BmDistLoadG              7      51      Y      1     1.76000000000000E+0
1.76000000000000E+0      0.00000000000000E+0      0.00000000000000E+0
0.00000000000000E+0      0.00000000000000E+0
   BmDistLoadG              7      52      Y      1     1.76000000000000E+0
1.76000000000000E+0      0.00000000000000E+0      0.00000000000000E+0
0.00000000000000E+0      0.00000000000000E+0
   BmDistLoadG              7      53      Y      1     1.76000000000000E+0
1.76000000000000E+0      0.00000000000000E+0      0.00000000000000E+0
0.00000000000000E+0      0.00000000000000E+0
   BmDistLoadG              7      54      Y      1     1.76000000000000E+0
1.76000000000000E+0      0.00000000000000E+0      0.00000000000000E+0
0.00000000000000E+0      0.00000000000000E+0
   BmDistLoadG              7      55      Y      1     1.76000000000000E+0
1.76000000000000E+0      0.00000000000000E+0      0.00000000000000E+0
0.00000000000000E+0      0.00000000000000E+0
   BmDistLoadG              7      56      Y      1     1.76000000000000E+0
1.76000000000000E+0      0.00000000000000E+0      0.00000000000000E+0
0.00000000000000E+0      0.00000000000000E+0
   BmDistLoadG              7      57      Y      1     1.76000000000000E+0
1.76000000000000E+0      0.00000000000000E+0      0.00000000000000E+0
0.00000000000000E+0      0.00000000000000E+0
   BmDistLoadG              7      58      Y      1     1.76000000000000E+0
1.76000000000000E+0      0.00000000000000E+0      0.00000000000000E+0
0.00000000000000E+0      0.00000000000000E+0
   BmDistLoadG              7      59      Y      1     1.76000000000000E+0
```

```
1.76000000000000E+0      0.00000000000000E+0      0.00000000000000E+0
0.00000000000000E+0      0.00000000000000E+0
   BmDistLoadG              7      60       Y       1     1.76000000000000E+0
1.76000000000000E+0      0.00000000000000E+0      0.00000000000000E+0
0.00000000000000E+0      0.00000000000000E+0
   BmDistLoadG              7      61       Y       1     1.76000000000000E+0
1.76000000000000E+0      0.00000000000000E+0      0.00000000000000E+0
0.00000000000000E+0      0.00000000000000E+0
   BmDistLoadG              7      62       Y       1     1.76000000000000E+0
1.76000000000000E+0      0.00000000000000E+0      0.00000000000000E+0
0.00000000000000E+0      0.00000000000000E+0
   BmDistLoadG              7      63       Y       1     1.76000000000000E+0
1.76000000000000E+0      0.00000000000000E+0      0.00000000000000E+0
0.00000000000000E+0      0.00000000000000E+0
   BmDistLoadG              7      64       Y       1     1.76000000000000E+0
1.76000000000000E+0      0.00000000000000E+0      0.00000000000000E+0
0.00000000000000E+0      0.00000000000000E+0
   BmDistLoadG              7      65       Y       1     1.76000000000000E+0
1.76000000000000E+0      0.00000000000000E+0      0.00000000000000E+0
0.00000000000000E+0      0.00000000000000E+0
   BmDistLoadG              7      66       Y       1     1.76000000000000E+0
1.76000000000000E+0      0.00000000000000E+0      0.00000000000000E+0
0.00000000000000E+0      0.00000000000000E+0
   BmDistLoadG              7      67       Y       1     1.76000000000000E+0
1.76000000000000E+0      0.00000000000000E+0      0.00000000000000E+0
0.00000000000000E+0      0.00000000000000E+0
   BmDistLoadG              7      68       Y       1     1.76000000000000E+0
1.76000000000000E+0      0.00000000000000E+0      0.00000000000000E+0
0.00000000000000E+0      0.00000000000000E+0
   BmDistLoadG              7      69       Y       1     1.65000000000000E+0
1.65000000000000E+0      0.00000000000000E+0      0.00000000000000E+0
0.00000000000000E+0      0.00000000000000E+0
   BmDistLoadG              7      70       Y       1     1.65000000000000E+0
1.65000000000000E+0      0.00000000000000E+0      0.00000000000000E+0
0.00000000000000E+0      0.00000000000000E+0
   BmDistLoadG              7      71       Y       1     1.65000000000000E+0
1.65000000000000E+0      0.00000000000000E+0      0.00000000000000E+0
0.00000000000000E+0      0.00000000000000E+0
   BmDistLoadG              7      72       Y       1     1.65000000000000E+0
1.65000000000000E+0      0.00000000000000E+0      0.00000000000000E+0
0.00000000000000E+0      0.00000000000000E+0
   BmDistLoadG              7      73       Y       1     1.65000000000000E+0
1.65000000000000E+0      0.00000000000000E+0      0.00000000000000E+0
0.00000000000000E+0      0.00000000000000E+0
   BmDistLoadG              7      74       Y       1     3.30000000000000E+0
3.30000000000000E+0      0.00000000000000E+0      0.00000000000000E+0
0.00000000000000E+0      0.00000000000000E+0
   BmDistLoadG              7      75       Y       1     3.30000000000000E+0
3.30000000000000E+0      0.00000000000000E+0      0.00000000000000E+0
0.00000000000000E+0      0.00000000000000E+0
   BmDistLoadG              7      76       Y       1     3.30000000000000E+0
3.30000000000000E+0      0.00000000000000E+0      0.00000000000000E+0
0.00000000000000E+0      0.00000000000000E+0
   BmDistLoadG              7      77       Y       1     3.30000000000000E+0
```

```
3.30000000000000E+0      0.00000000000000E+0      0.00000000000000E+0
0.00000000000000E+0      0.00000000000000E+0
   BmDistLoadG              7      78       Y       1     3.30000000000000E+0
3.30000000000000E+0      0.00000000000000E+0      0.00000000000000E+0
0.00000000000000E+0      0.00000000000000E+0
   BmDistLoadG              7      79       Y       1     3.30000000000000E+0
3.30000000000000E+0      0.00000000000000E+0      0.00000000000000E+0
0.00000000000000E+0      0.00000000000000E+0
   BmDistLoadG              7      80       Y       1     3.30000000000000E+0
3.30000000000000E+0      0.00000000000000E+0      0.00000000000000E+0
0.00000000000000E+0      0.00000000000000E+0
   BmDistLoadG              7      81       Y       1     3.30000000000000E+0
3.30000000000000E+0      0.00000000000000E+0      0.00000000000000E+0
0.00000000000000E+0      0.00000000000000E+0
   BmDistLoadG              7      82       Y       1     3.30000000000000E+0
3.30000000000000E+0      0.00000000000000E+0      0.00000000000000E+0
0.00000000000000E+0      0.00000000000000E+0
   BmDistLoadG              7      83       Y       1     3.30000000000000E+0
3.30000000000000E+0      0.00000000000000E+0      0.00000000000000E+0
0.00000000000000E+0      0.00000000000000E+0
   BmDistLoadG              7      84       Y       1     3.30000000000000E+0
3.30000000000000E+0      0.00000000000000E+0      0.00000000000000E+0
0.00000000000000E+0      0.00000000000000E+0
   BmDistLoadG              7      85       Y       1     3.30000000000000E+0
3.30000000000000E+0      0.00000000000000E+0      0.00000000000000E+0
0.00000000000000E+0      0.00000000000000E+0
   BmDistLoadG              7      86       Y       1     3.30000000000000E+0
3.30000000000000E+0      0.00000000000000E+0      0.00000000000000E+0
0.00000000000000E+0      0.00000000000000E+0
   BmDistLoadG              7      87       Y       1     3.30000000000000E+0
3.30000000000000E+0      0.00000000000000E+0      0.00000000000000E+0
0.00000000000000E+0      0.00000000000000E+0
   BmDistLoadG              7      88       Y       1     3.30000000000000E+0
3.30000000000000E+0      0.00000000000000E+0      0.00000000000000E+0
0.00000000000000E+0      0.00000000000000E+0
   BmDistLoadG              7      89       Y       1     3.30000000000000E+0
3.30000000000000E+0      0.00000000000000E+0      0.00000000000000E+0
0.00000000000000E+0      0.00000000000000E+0
   BmDistLoadG              7      90       Y       1     3.30000000000000E+0
3.30000000000000E+0      0.00000000000000E+0      0.00000000000000E+0
0.00000000000000E+0      0.00000000000000E+0
   BmDistLoadG              7      91       Y       1     3.30000000000000E+0
3.30000000000000E+0      0.00000000000000E+0      0.00000000000000E+0
0.00000000000000E+0      0.00000000000000E+0
   BmDistLoadG              7      92       Y       1     3.30000000000000E+0
3.30000000000000E+0      0.00000000000000E+0      0.00000000000000E+0
0.00000000000000E+0      0.00000000000000E+0
   BmDistLoadG              7      93       Y       1     3.30000000000000E+0
3.30000000000000E+0      0.00000000000000E+0      0.00000000000000E+0
0.00000000000000E+0      0.00000000000000E+0
   BmDistLoadG              7      94       Y       1     3.30000000000000E+0
3.30000000000000E+0      0.00000000000000E+0      0.00000000000000E+0
0.00000000000000E+0      0.00000000000000E+0
   BmDistLoadG              7      95       Y       1     3.30000000000000E+0
```

```
3.30000000000000E+0      0.00000000000000E+0      0.00000000000000E+0
0.00000000000000E+0      0.00000000000000E+0
   BmDistLoadG              7      96       Y      1     3.30000000000000E+0
3.30000000000000E+0      0.00000000000000E+0      0.00000000000000E+0
0.00000000000000E+0      0.00000000000000E+0
   BmDistLoadG              7      97       Y      1     3.30000000000000E+0
3.30000000000000E+0      0.00000000000000E+0      0.00000000000000E+0
0.00000000000000E+0      0.00000000000000E+0
   BmDistLoadG              7      98       Y      1     3.30000000000000E+0
3.30000000000000E+0      0.00000000000000E+0      0.00000000000000E+0
0.00000000000000E+0      0.00000000000000E+0
   BmDistLoadG              7      99       Y      1     3.30000000000000E+0
3.30000000000000E+0      0.00000000000000E+0      0.00000000000000E+0
0.00000000000000E+0      0.00000000000000E+0
   BmDistLoadG              7     100       Y      1     3.30000000000000E+0
3.30000000000000E+0      0.00000000000000E+0      0.00000000000000E+0
0.00000000000000E+0      0.00000000000000E+0
   BmDistLoadG              7     101       Y      1     3.30000000000000E+0
3.30000000000000E+0      0.00000000000000E+0      0.00000000000000E+0
0.00000000000000E+0      0.00000000000000E+0
   BmDistLoadG              7     102       Y      1     3.30000000000000E+0
3.30000000000000E+0      0.00000000000000E+0      0.00000000000000E+0
0.00000000000000E+0      0.00000000000000E+0
   BmDistLoadG              7     103       Y      1     3.30000000000000E+0
3.30000000000000E+0      0.00000000000000E+0      0.00000000000000E+0
0.00000000000000E+0      0.00000000000000E+0
   BmDistLoadG              7     104       Y      1     3.30000000000000E+0
3.30000000000000E+0      0.00000000000000E+0      0.00000000000000E+0
0.00000000000000E+0      0.00000000000000E+0
   BmDistLoadG              7     105       Y      1     3.30000000000000E+0
3.30000000000000E+0      0.00000000000000E+0      0.00000000000000E+0
0.00000000000000E+0      0.00000000000000E+0
   BmDistLoadG              7     106       Y      1     3.30000000000000E+0
3.30000000000000E+0      0.00000000000000E+0      0.00000000000000E+0
0.00000000000000E+0      0.00000000000000E+0
   BmDistLoadG              7     107       Y      1     3.30000000000000E+0
3.30000000000000E+0      0.00000000000000E+0      0.00000000000000E+0
0.00000000000000E+0      0.00000000000000E+0
   BmDistLoadG              7     108       Y      1     3.30000000000000E+0
3.30000000000000E+0      0.00000000000000E+0      0.00000000000000E+0
0.00000000000000E+0      0.00000000000000E+0
   BmDistLoadG              7     109       Y      1     3.30000000000000E+0
3.30000000000000E+0      0.00000000000000E+0      0.00000000000000E+0
0.00000000000000E+0      0.00000000000000E+0
   BmDistLoadG              7     110       Y      1     3.30000000000000E+0
3.30000000000000E+0      0.00000000000000E+0      0.00000000000000E+0
0.00000000000000E+0      0.00000000000000E+0
   BmDistLoadG              7     111       Y      1     3.30000000000000E+0
3.30000000000000E+0      0.00000000000000E+0      0.00000000000000E+0
0.00000000000000E+0      0.00000000000000E+0
   BmDistLoadG              7     112       Y      1     3.30000000000000E+0
3.30000000000000E+0      0.00000000000000E+0      0.00000000000000E+0
0.00000000000000E+0      0.00000000000000E+0
   BmDistLoadG              7     113       Y      1     3.30000000000000E+0
```

```
3.30000000000000E+0       0.00000000000000E+0       0.00000000000000E+0
0.00000000000000E+0       0.00000000000000E+0
   BmDistLoadG               7      114       Y        1      1.65000000000000E+0
1.65000000000000E+0       0.00000000000000E+0       0.00000000000000E+0
0.00000000000000E+0       0.00000000000000E+0
   BmDistLoadG               7      115       Y        1      1.65000000000000E+0
1.65000000000000E+0       0.00000000000000E+0       0.00000000000000E+0
0.00000000000000E+0       0.00000000000000E+0
   BmDistLoadG               7      116       Y        1      1.65000000000000E+0
1.65000000000000E+0       0.00000000000000E+0       0.00000000000000E+0
0.00000000000000E+0       0.00000000000000E+0
   BmDistLoadG               7      117       Y        1      1.65000000000000E+0
1.65000000000000E+0       0.00000000000000E+0       0.00000000000000E+0
0.00000000000000E+0       0.00000000000000E+0
   BmDistLoadG               7      118       Y        1      1.65000000000000E+0
1.65000000000000E+0       0.00000000000000E+0       0.00000000000000E+0
0.00000000000000E+0       0.00000000000000E+0
   BmDistLoadG               7      119       Y        1      1.65000000000000E+0
1.65000000000000E+0       0.00000000000000E+0       0.00000000000000E+0
0.00000000000000E+0       0.00000000000000E+0
   BmDistLoadG               7      120       Y        1      1.65000000000000E+0
1.65000000000000E+0       0.00000000000000E+0       0.00000000000000E+0
0.00000000000000E+0       0.00000000000000E+0
   BmDistLoadG               7      121       Y        1      1.65000000000000E+0
1.65000000000000E+0       0.00000000000000E+0       0.00000000000000E+0
0.00000000000000E+0       0.00000000000000E+0
   BmDistLoadG               7      122       Y        1      1.65000000000000E+0
1.65000000000000E+0       0.00000000000000E+0       0.00000000000000E+0
0.00000000000000E+0       0.00000000000000E+0
   BmDistLoadG               7      123       Y        1      1.65000000000000E+0
1.65000000000000E+0       0.00000000000000E+0       0.00000000000000E+0
0.00000000000000E+0       0.00000000000000E+0
   BmDistLoadG               7      124       Y        1      3.30000000000000E+0
3.30000000000000E+0       0.00000000000000E+0       0.00000000000000E+0
0.00000000000000E+0       0.00000000000000E+0
   BmDistLoadG               7      125       Y        1      3.30000000000000E+0
3.30000000000000E+0       0.00000000000000E+0       0.00000000000000E+0
0.00000000000000E+0       0.00000000000000E+0
   BmDistLoadG               7      126       Y        1      3.30000000000000E+0
3.30000000000000E+0       0.00000000000000E+0       0.00000000000000E+0
0.00000000000000E+0       0.00000000000000E+0
   BmDistLoadG               7      127       Y        1      3.30000000000000E+0
3.30000000000000E+0       0.00000000000000E+0       0.00000000000000E+0
0.00000000000000E+0       0.00000000000000E+0
   BmDistLoadG               7      128       Y        1      3.30000000000000E+0
3.30000000000000E+0       0.00000000000000E+0       0.00000000000000E+0
0.00000000000000E+0       0.00000000000000E+0
   BmDistLoadG               7      129       Y        1      3.30000000000000E+0
3.30000000000000E+0       0.00000000000000E+0       0.00000000000000E+0
0.00000000000000E+0       0.00000000000000E+0
   BmDistLoadG               7      130       Y        1      3.30000000000000E+0
3.30000000000000E+0       0.00000000000000E+0       0.00000000000000E+0
0.00000000000000E+0       0.00000000000000E+0
   BmDistLoadG               7      131       Y        1      3.30000000000000E+0
```

```
3.30000000000000E+0      0.00000000000000E+0      0.00000000000000E+0
0.00000000000000E+0      0.00000000000000E+0
   BmDistLoadG              7     132      Y      1     3.30000000000000E+0
3.30000000000000E+0      0.00000000000000E+0      0.00000000000000E+0
0.00000000000000E+0      0.00000000000000E+0
   BmDistLoadG              7     133      Y      1     3.30000000000000E+0
3.30000000000000E+0      0.00000000000000E+0      0.00000000000000E+0
0.00000000000000E+0      0.00000000000000E+0
   BmDistLoadG              7     134      Y      1     3.30000000000000E+0
3.30000000000000E+0      0.00000000000000E+0      0.00000000000000E+0
0.00000000000000E+0      0.00000000000000E+0
   BmDistLoadG              7     135      Y      1     3.30000000000000E+0
3.30000000000000E+0      0.00000000000000E+0      0.00000000000000E+0
0.00000000000000E+0      0.00000000000000E+0
   BmDistLoadG              7     136      Y      1     3.30000000000000E+0
3.30000000000000E+0      0.00000000000000E+0      0.00000000000000E+0
0.00000000000000E+0      0.00000000000000E+0
   BmDistLoadG              7     137      Y      1     3.30000000000000E+0
3.30000000000000E+0      0.00000000000000E+0      0.00000000000000E+0
0.00000000000000E+0      0.00000000000000E+0
   BmDistLoadG              7     138      Y      1     3.30000000000000E+0
3.30000000000000E+0      0.00000000000000E+0      0.00000000000000E+0
0.00000000000000E+0      0.00000000000000E+0
   BmDistLoadG              7     139      Y      1     3.30000000000000E+0
3.30000000000000E+0      0.00000000000000E+0      0.00000000000000E+0
0.00000000000000E+0      0.00000000000000E+0
   BmDistLoadG              7     140      Y      1     3.30000000000000E+0
3.30000000000000E+0      0.00000000000000E+0      0.00000000000000E+0
0.00000000000000E+0      0.00000000000000E+0
   BmDistLoadG              7     141      Y      1     3.30000000000000E+0
3.30000000000000E+0      0.00000000000000E+0      0.00000000000000E+0
0.00000000000000E+0      0.00000000000000E+0
   BmDistLoadG              7     142      Y      1     3.30000000000000E+0
3.30000000000000E+0      0.00000000000000E+0      0.00000000000000E+0
0.00000000000000E+0      0.00000000000000E+0
   BmDistLoadG              7     143      Y      1     3.30000000000000E+0
3.30000000000000E+0      0.00000000000000E+0      0.00000000000000E+0
0.00000000000000E+0      0.00000000000000E+0
   BmDistLoadG              7     144      Y      1     3.30000000000000E+0
3.30000000000000E+0      0.00000000000000E+0      0.00000000000000E+0
0.00000000000000E+0      0.00000000000000E+0
   BmDistLoadG              7     145      Y      1     3.30000000000000E+0
3.30000000000000E+0      0.00000000000000E+0      0.00000000000000E+0
0.00000000000000E+0      0.00000000000000E+0
   BmDistLoadG              7     146      Y      1     3.30000000000000E+0
3.30000000000000E+0      0.00000000000000E+0      0.00000000000000E+0
0.00000000000000E+0      0.00000000000000E+0
   BmDistLoadG              7     147      Y      1     3.30000000000000E+0
3.30000000000000E+0      0.00000000000000E+0      0.00000000000000E+0
0.00000000000000E+0      0.00000000000000E+0
   BmDistLoadG              7     148      Y      1     3.30000000000000E+0
3.30000000000000E+0      0.00000000000000E+0      0.00000000000000E+0
0.00000000000000E+0      0.00000000000000E+0
   BmDistLoadG              7     149      Y      1     3.30000000000000E+0
```

3.30000000000000E+0 0.00000000000000E+0 0.00000000000000E+0
0.00000000000000E+0 0.00000000000000E+0
BmDistLoadG 7 150 Y 1 3.30000000000000E+0
3.30000000000000E+0 0.00000000000000E+0 0.00000000000000E+0
0.00000000000000E+0 0.00000000000000E+0
BmDistLoadG 7 151 Y 1 3.30000000000000E+0
3.30000000000000E+0 0.00000000000000E+0 0.00000000000000E+0
0.00000000000000E+0 0.00000000000000E+0
BmDistLoadG 7 152 Y 1 3.30000000000000E+0
3.30000000000000E+0 0.00000000000000E+0 0.00000000000000E+0
0.00000000000000E+0 0.00000000000000E+0
BmDistLoadG 7 153 Y 1 3.30000000000000E+0
3.30000000000000E+0 0.00000000000000E+0 0.00000000000000E+0
0.00000000000000E+0 0.00000000000000E+0
BmDistLoadG 7 154 Y 1 3.30000000000000E+0
3.30000000000000E+0 0.00000000000000E+0 0.00000000000000E+0
0.00000000000000E+0 0.00000000000000E+0
BmDistLoadG 7 155 Y 1 3.30000000000000E+0
3.30000000000000E+0 0.00000000000000E+0 0.00000000000000E+0
0.00000000000000E+0 0.00000000000000E+0
BmDistLoadG 7 156 Y 1 3.30000000000000E+0
3.30000000000000E+0 0.00000000000000E+0 0.00000000000000E+0
0.00000000000000E+0 0.00000000000000E+0
BmDistLoadG 7 157 Y 1 3.30000000000000E+0
3.30000000000000E+0 0.00000000000000E+0 0.00000000000000E+0
0.00000000000000E+0 0.00000000000000E+0
BmDistLoadG 7 158 Y 1 3.30000000000000E+0
3.30000000000000E+0 0.00000000000000E+0 0.00000000000000E+0
0.00000000000000E+0 0.00000000000000E+0
BmDistLoadG 7 159 Y 1 1.65000000000000E+0
1.65000000000000E+0 0.00000000000000E+0 0.00000000000000E+0
0.00000000000000E+0 0.00000000000000E+0
BmDistLoadG 7 160 Y 1 1.65000000000000E+0
1.65000000000000E+0 0.00000000000000E+0 0.00000000000000E+0
0.00000000000000E+0 0.00000000000000E+0
BmDistLoadG 7 161 Y 1 1.65000000000000E+0
1.65000000000000E+0 0.00000000000000E+0 0.00000000000000E+0
0.00000000000000E+0 0.00000000000000E+0
BmDistLoadG 7 162 Y 1 1.65000000000000E+0
1.65000000000000E+0 0.00000000000000E+0 0.00000000000000E+0
0.00000000000000E+0 0.00000000000000E+0
BmDistLoadG 7 163 Y 1 1.65000000000000E+0
1.65000000000000E+0 0.00000000000000E+0 0.00000000000000E+0
0.00000000000000E+0 0.00000000000000E+0
BmDistLoadG 7 164 Z 1 1.15500000000000E+0
1.15500000000000E+0 0.00000000000000E+0 0.00000000000000E+0
0.00000000000000E+0 0.00000000000000E+0
BmDistLoadG 7 165 Z 1 1.15500000000000E+0
1.15500000000000E+0 0.00000000000000E+0 0.00000000000000E+0
0.00000000000000E+0 0.00000000000000E+0
BmDistLoadG 7 166 Z 1 1.15500000000000E+0
1.15500000000000E+0 0.00000000000000E+0 0.00000000000000E+0
0.00000000000000E+0 0.00000000000000E+0
BmDistLoadG 7 167 Z 1 1.15500000000000E+0

```
1.15500000000000E+0      0.00000000000000E+0      0.00000000000000E+0
0.00000000000000E+0      0.00000000000000E+0
   BmDistLoadG              7     168        Z      1     1.15500000000000E+0
1.15500000000000E+0      0.00000000000000E+0      0.00000000000000E+0
0.00000000000000E+0      0.00000000000000E+0
   BmDistLoadG              7     169        Z      1     1.15500000000000E+0
1.15500000000000E+0      0.00000000000000E+0      0.00000000000000E+0
0.00000000000000E+0      0.00000000000000E+0
   BmDistLoadG              7     170        Z      1     1.15500000000000E+0
1.15500000000000E+0      0.00000000000000E+0      0.00000000000000E+0
0.00000000000000E+0      0.00000000000000E+0
   BmDistLoadG              7     171        Z      1     1.15500000000000E+0
1.15500000000000E+0      0.00000000000000E+0      0.00000000000000E+0
0.00000000000000E+0      0.00000000000000E+0
   BmDistLoadG              7     172        Z      1     1.15500000000000E+0
1.15500000000000E+0      0.00000000000000E+0      0.00000000000000E+0
0.00000000000000E+0      0.00000000000000E+0
   BmDistLoadG              7     173        Z      1     1.15500000000000E+0
1.15500000000000E+0      0.00000000000000E+0      0.00000000000000E+0
0.00000000000000E+0      0.00000000000000E+0
   BmDistLoadG              7     174        Z      1     1.15500000000000E+0
1.15500000000000E+0      0.00000000000000E+0      0.00000000000000E+0
0.00000000000000E+0      0.00000000000000E+0
   BmDistLoadG              7     175        Z      1     1.15500000000000E+0
1.15500000000000E+0      0.00000000000000E+0      0.00000000000000E+0
0.00000000000000E+0      0.00000000000000E+0
   BmDistLoadG              7     176        Z      1     1.15500000000000E+0
1.15500000000000E+0      0.00000000000000E+0      0.00000000000000E+0
0.00000000000000E+0      0.00000000000000E+0
   BmDistLoadG              7     177        Z      1     1.15500000000000E+0
1.15500000000000E+0      0.00000000000000E+0      0.00000000000000E+0
0.00000000000000E+0      0.00000000000000E+0
   BmDistLoadG              7     178        Z      1     1.15500000000000E+0
1.15500000000000E+0      0.00000000000000E+0      0.00000000000000E+0
0.00000000000000E+0      0.00000000000000E+0
   BmDistLoadG              7     179        Z      1     1.15500000000000E+0
1.15500000000000E+0      0.00000000000000E+0      0.00000000000000E+0
0.00000000000000E+0      0.00000000000000E+0
   BmDistLoadG              7     180        Z      1     1.15500000000000E+0
1.15500000000000E+0      0.00000000000000E+0      0.00000000000000E+0
0.00000000000000E+0      0.00000000000000E+0
   BmDistLoadG              7     181        Z      1     1.15500000000000E+0
1.15500000000000E+0      0.00000000000000E+0      0.00000000000000E+0
0.00000000000000E+0      0.00000000000000E+0
   BmDistLoadG              7     182        Z      1     1.15500000000000E+0
1.15500000000000E+0      0.00000000000000E+0      0.00000000000000E+0
0.00000000000000E+0      0.00000000000000E+0
   BmDistLoadG              7     183        Z      1     1.15500000000000E+0
1.15500000000000E+0      0.00000000000000E+0      0.00000000000000E+0
0.00000000000000E+0      0.00000000000000E+0
   BmDistLoadG              7     184        Z      1     1.15500000000000E+0
1.15500000000000E+0      0.00000000000000E+0      0.00000000000000E+0
0.00000000000000E+0      0.00000000000000E+0
   BmDistLoadG              7     185        Z      1     1.15500000000000E+0
```

```
1.15500000000000E+0       0.00000000000000E+0       0.00000000000000E+0
0.00000000000000E+0       0.00000000000000E+0
   BmDistLoadG               7      186       Z       1      1.15500000000000E+0
1.15500000000000E+0       0.00000000000000E+0       0.00000000000000E+0
0.00000000000000E+0       0.00000000000000E+0
   BmDistLoadG               7      187       Z       1      1.15500000000000E+0
1.15500000000000E+0       0.00000000000000E+0       0.00000000000000E+0
0.00000000000000E+0       0.00000000000000E+0
   BmDistLoadG               7      188       Z       1      1.15500000000000E+0
1.15500000000000E+0       0.00000000000000E+0       0.00000000000000E+0
0.00000000000000E+0       0.00000000000000E+0
   BmDistLoadG               7      189       Z       1      1.15500000000000E+0
1.15500000000000E+0       0.00000000000000E+0       0.00000000000000E+0
0.00000000000000E+0       0.00000000000000E+0
   BmDistLoadG               7      190       Z       1      1.15500000000000E+0
1.15500000000000E+0       0.00000000000000E+0       0.00000000000000E+0
0.00000000000000E+0       0.00000000000000E+0
   BmDistLoadG               7      191       Z       1      1.15500000000000E+0
1.15500000000000E+0       0.00000000000000E+0       0.00000000000000E+0
0.00000000000000E+0       0.00000000000000E+0
   BmDistLoadG               7      192       Z       1      1.15500000000000E+0
1.15500000000000E+0       0.00000000000000E+0       0.00000000000000E+0
0.00000000000000E+0       0.00000000000000E+0
   BmDistLoadG               7      193       Z       1      1.15500000000000E+0
1.15500000000000E+0       0.00000000000000E+0       0.00000000000000E+0
0.00000000000000E+0       0.00000000000000E+0
   BmDistLoadG               7      194       Z       1      1.15500000000000E+0
1.15500000000000E+0       0.00000000000000E+0       0.00000000000000E+0
0.00000000000000E+0       0.00000000000000E+0
   BmDistLoadG               7      195       Z       1      1.15500000000000E+0
1.15500000000000E+0       0.00000000000000E+0       0.00000000000000E+0
0.00000000000000E+0       0.00000000000000E+0
   BmDistLoadG               7      196       Z       1      1.15500000000000E+0
1.15500000000000E+0       0.00000000000000E+0       0.00000000000000E+0
0.00000000000000E+0       0.00000000000000E+0
   BmDistLoadG               7      197       Z       1      1.15500000000000E+0
1.15500000000000E+0       0.00000000000000E+0       0.00000000000000E+0
0.00000000000000E+0       0.00000000000000E+0
   BmDistLoadG               7      198       Z       1      1.15500000000000E+0
1.15500000000000E+0       0.00000000000000E+0       0.00000000000000E+0
0.00000000000000E+0       0.00000000000000E+0
   BmDistLoadG               7      199       Z       1      1.15500000000000E+0
1.15500000000000E+0       0.00000000000000E+0       0.00000000000000E+0
0.00000000000000E+0       0.00000000000000E+0
   BmDistLoadG               7      200       Z       1      1.15500000000000E+0
1.15500000000000E+0       0.00000000000000E+0       0.00000000000000E+0
0.00000000000000E+0       0.00000000000000E+0
   BmDistLoadG               7      201       Z       1      1.15500000000000E+0
1.15500000000000E+0       0.00000000000000E+0       0.00000000000000E+0
0.00000000000000E+0       0.00000000000000E+0
   BmDistLoadG               7      202       Z       1      1.15500000000000E+0
1.15500000000000E+0       0.00000000000000E+0       0.00000000000000E+0
0.00000000000000E+0       0.00000000000000E+0
   BmDistLoadG               7      203       Z       1      1.15500000000000E+0
```

```
1.15500000000000E+0      0.00000000000000E+0      0.00000000000000E+0
0.00000000000000E+0      0.00000000000000E+0
   BmDistLoadG              7     204        Z      1     1.15500000000000E+0
1.15500000000000E+0      0.00000000000000E+0      0.00000000000000E+0
0.00000000000000E+0      0.00000000000000E+0
   BmDistLoadG              7     205        Z      1     1.15500000000000E+0
1.15500000000000E+0      0.00000000000000E+0      0.00000000000000E+0
0.00000000000000E+0      0.00000000000000E+0
   BmDistLoadG              7     206        Z      1     1.15500000000000E+0
1.15500000000000E+0      0.00000000000000E+0      0.00000000000000E+0
0.00000000000000E+0      0.00000000000000E+0
   BmDistLoadG              7     207        Z      1     1.15500000000000E+0
1.15500000000000E+0      0.00000000000000E+0      0.00000000000000E+0
0.00000000000000E+0      0.00000000000000E+0
   BmDistLoadG              7     208        Z      1     1.15500000000000E+0
1.15500000000000E+0      0.00000000000000E+0      0.00000000000000E+0
0.00000000000000E+0      0.00000000000000E+0
   BmDistLoadG              7     209        Z      1     1.15500000000000E+0
1.15500000000000E+0      0.00000000000000E+0      0.00000000000000E+0
0.00000000000000E+0      0.00000000000000E+0
   BmDistLoadG              7     210        Z      1     1.15500000000000E+0
1.15500000000000E+0      0.00000000000000E+0      0.00000000000000E+0
0.00000000000000E+0      0.00000000000000E+0
   BmDistLoadG              7     211        Z      1     1.15500000000000E+0
1.15500000000000E+0      0.00000000000000E+0      0.00000000000000E+0
0.00000000000000E+0      0.00000000000000E+0
   BmDistLoadG              7     212        Z      1     1.15500000000000E+0
1.15500000000000E+0      0.00000000000000E+0      0.00000000000000E+0
0.00000000000000E+0      0.00000000000000E+0
   BmDistLoadG              7     213        Z      1     1.15500000000000E+0
1.15500000000000E+0      0.00000000000000E+0      0.00000000000000E+0
0.00000000000000E+0      0.00000000000000E+0
   BmDistLoadG              7     214        Z      1     1.15500000000000E+0
1.15500000000000E+0      0.00000000000000E+0      0.00000000000000E+0
0.00000000000000E+0      0.00000000000000E+0
   BmDistLoadG              7     215        Z      1     1.15500000000000E+0
1.15500000000000E+0      0.00000000000000E+0      0.00000000000000E+0
0.00000000000000E+0      0.00000000000000E+0
   BmDistLoadG              7     216        Z      1     1.15500000000000E+0
1.15500000000000E+0      0.00000000000000E+0      0.00000000000000E+0
0.00000000000000E+0      0.00000000000000E+0
   BmDistLoadG              7     217        Z      1     1.15500000000000E+0
1.15500000000000E+0      0.00000000000000E+0      0.00000000000000E+0
0.00000000000000E+0      0.00000000000000E+0
   BmDistLoadG              7     218        Z      1     2.31000000000000E+0
2.31000000000000E+0      0.00000000000000E+0      0.00000000000000E+0
0.00000000000000E+0      0.00000000000000E+0
   BmDistLoadG              7     219        Z      1     2.31000000000000E+0
2.31000000000000E+0      0.00000000000000E+0      0.00000000000000E+0
0.00000000000000E+0      0.00000000000000E+0
   BmDistLoadG              7     220        Z      1     2.31000000000000E+0
2.31000000000000E+0      0.00000000000000E+0      0.00000000000000E+0
0.00000000000000E+0      0.00000000000000E+0
   BmDistLoadG              7     221        Z      1     2.31000000000000E+0
```

```
2.31000000000000E+0      0.00000000000000E+0      0.00000000000000E+0
0.00000000000000E+0      0.00000000000000E+0
   BmDistLoadG              7     222        Z      1     2.31000000000000E+0
2.31000000000000E+0      0.00000000000000E+0      0.00000000000000E+0
0.00000000000000E+0      0.00000000000000E+0
   BmDistLoadG              7     223        Z      1     2.31000000000000E+0
2.31000000000000E+0      0.00000000000000E+0      0.00000000000000E+0
0.00000000000000E+0      0.00000000000000E+0
   BmDistLoadG              7     224        Z      1     2.31000000000000E+0
2.31000000000000E+0      0.00000000000000E+0      0.00000000000000E+0
0.00000000000000E+0      0.00000000000000E+0
   BmDistLoadG              7     225        Z      1     2.31000000000000E+0
2.31000000000000E+0      0.00000000000000E+0      0.00000000000000E+0
0.00000000000000E+0      0.00000000000000E+0
   BmDistLoadG              7     226        Z      1     2.31000000000000E+0
2.31000000000000E+0      0.00000000000000E+0      0.00000000000000E+0
0.00000000000000E+0      0.00000000000000E+0
   BmDistLoadG              7     227        Z      1     2.31000000000000E+0
2.31000000000000E+0      0.00000000000000E+0      0.00000000000000E+0
0.00000000000000E+0      0.00000000000000E+0
   BmDistLoadG              7     228        Z      1     2.31000000000000E+0
2.31000000000000E+0      0.00000000000000E+0      0.00000000000000E+0
0.00000000000000E+0      0.00000000000000E+0
   BmDistLoadG              7     229        Z      1     2.31000000000000E+0
2.31000000000000E+0      0.00000000000000E+0      0.00000000000000E+0
0.00000000000000E+0      0.00000000000000E+0
   BmDistLoadG              7     230        Z      1     2.31000000000000E+0
2.31000000000000E+0      0.00000000000000E+0      0.00000000000000E+0
0.00000000000000E+0      0.00000000000000E+0
   BmDistLoadG              7     231        Z      1     2.31000000000000E+0
2.31000000000000E+0      0.00000000000000E+0      0.00000000000000E+0
0.00000000000000E+0      0.00000000000000E+0
   BmDistLoadG              7     232        Z      1     2.31000000000000E+0
2.31000000000000E+0      0.00000000000000E+0      0.00000000000000E+0
0.00000000000000E+0      0.00000000000000E+0
   BmDistLoadG              7     233        Z      1     2.31000000000000E+0
2.31000000000000E+0      0.00000000000000E+0      0.00000000000000E+0
0.00000000000000E+0      0.00000000000000E+0
   BmDistLoadG              7     234        Z      1     2.31000000000000E+0
2.31000000000000E+0      0.00000000000000E+0      0.00000000000000E+0
0.00000000000000E+0      0.00000000000000E+0
   BmDistLoadG              7     235        Z      1     2.31000000000000E+0
2.31000000000000E+0      0.00000000000000E+0      0.00000000000000E+0
0.00000000000000E+0      0.00000000000000E+0
   BmDistLoadG              7     236        Z      1     2.31000000000000E+0
2.31000000000000E+0      0.00000000000000E+0      0.00000000000000E+0
0.00000000000000E+0      0.00000000000000E+0
   BmDistLoadG              7     237        Z      1     2.31000000000000E+0
2.31000000000000E+0      0.00000000000000E+0      0.00000000000000E+0
0.00000000000000E+0      0.00000000000000E+0
   BmDistLoadG              7     238        Z      1     2.31000000000000E+0
2.31000000000000E+0      0.00000000000000E+0      0.00000000000000E+0
0.00000000000000E+0      0.00000000000000E+0
   BmDistLoadG              7     239        Z      1     2.31000000000000E+0
```

```
2.31000000000000E+0      0.00000000000000E+0      0.00000000000000E+0
0.00000000000000E+0      0.00000000000000E+0
   BmDistLoadG              7     240      Z      1     2.31000000000000E+0
2.31000000000000E+0      0.00000000000000E+0      0.00000000000000E+0
0.00000000000000E+0      0.00000000000000E+0
   BmDistLoadG              7     241      Z      1     2.31000000000000E+0
2.31000000000000E+0      0.00000000000000E+0      0.00000000000000E+0
0.00000000000000E+0      0.00000000000000E+0
   BmDistLoadG              7     242      Z      1     2.31000000000000E+0
2.31000000000000E+0      0.00000000000000E+0      0.00000000000000E+0
0.00000000000000E+0      0.00000000000000E+0
   BmDistLoadG              7     243      Z      1     2.31000000000000E+0
2.31000000000000E+0      0.00000000000000E+0      0.00000000000000E+0
0.00000000000000E+0      0.00000000000000E+0
   BmDistLoadG              7     244      Z      1     2.31000000000000E+0
2.31000000000000E+0      0.00000000000000E+0      0.00000000000000E+0
0.00000000000000E+0      0.00000000000000E+0
   BmDistLoadG              7     245      Z      1     2.31000000000000E+0
2.31000000000000E+0      0.00000000000000E+0      0.00000000000000E+0
0.00000000000000E+0      0.00000000000000E+0
   BmDistLoadG              7     246      Z      1     2.31000000000000E+0
2.31000000000000E+0      0.00000000000000E+0      0.00000000000000E+0
0.00000000000000E+0      0.00000000000000E+0
   BmDistLoadG              7     247      Z      1     2.31000000000000E+0
2.31000000000000E+0      0.00000000000000E+0      0.00000000000000E+0
0.00000000000000E+0      0.00000000000000E+0
   BmDistLoadG              7     248      Z      1     2.31000000000000E+0
2.31000000000000E+0      0.00000000000000E+0      0.00000000000000E+0
0.00000000000000E+0      0.00000000000000E+0
   BmDistLoadG              7     249      Z      1     2.31000000000000E+0
2.31000000000000E+0      0.00000000000000E+0      0.00000000000000E+0
0.00000000000000E+0      0.00000000000000E+0
   BmDistLoadG              7     250      Z      1     2.31000000000000E+0
2.31000000000000E+0      0.00000000000000E+0      0.00000000000000E+0
0.00000000000000E+0      0.00000000000000E+0
   BmDistLoadG              7     251      Z      1     2.31000000000000E+0
2.31000000000000E+0      0.00000000000000E+0      0.00000000000000E+0
0.00000000000000E+0      0.00000000000000E+0
   BmDistLoadG              7     252      Z      1     2.31000000000000E+0
2.31000000000000E+0      0.00000000000000E+0      0.00000000000000E+0
0.00000000000000E+0      0.00000000000000E+0
   BmDistLoadG              7     253      Z      1     2.31000000000000E+0
2.31000000000000E+0      0.00000000000000E+0      0.00000000000000E+0
0.00000000000000E+0      0.00000000000000E+0
   BmDistLoadG              7     254      Z      1     2.31000000000000E+0
2.31000000000000E+0      0.00000000000000E+0      0.00000000000000E+0
0.00000000000000E+0      0.00000000000000E+0
   BmDistLoadG              7     255      Z      1     2.31000000000000E+0
2.31000000000000E+0      0.00000000000000E+0      0.00000000000000E+0
0.00000000000000E+0      0.00000000000000E+0
   BmDistLoadG              7     256      Z      1     2.31000000000000E+0
2.31000000000000E+0      0.00000000000000E+0      0.00000000000000E+0
0.00000000000000E+0      0.00000000000000E+0
   BmDistLoadG              7     257      Z      1     2.31000000000000E+0
```

```
2.31000000000000E+0      0.00000000000000E+0      0.00000000000000E+0
0.00000000000000E+0      0.00000000000000E+0
   BmDistLoadG              7      258       Z       1      2.31000000000000E+0
2.31000000000000E+0      0.00000000000000E+0      0.00000000000000E+0
0.00000000000000E+0      0.00000000000000E+0
   BmDistLoadG              7      259       Z       1      2.31000000000000E+0
2.31000000000000E+0      0.00000000000000E+0      0.00000000000000E+0
0.00000000000000E+0      0.00000000000000E+0
   BmDistLoadG              7      260       Z       1      2.31000000000000E+0
2.31000000000000E+0      0.00000000000000E+0      0.00000000000000E+0
0.00000000000000E+0      0.00000000000000E+0
   BmDistLoadG              7      261       Z       1      2.31000000000000E+0
2.31000000000000E+0      0.00000000000000E+0      0.00000000000000E+0
0.00000000000000E+0      0.00000000000000E+0
   BmDistLoadG              7      262       Z       1      2.31000000000000E+0
2.31000000000000E+0      0.00000000000000E+0      0.00000000000000E+0
0.00000000000000E+0      0.00000000000000E+0
   BmDistLoadG              7      263       Z       1      2.31000000000000E+0
2.31000000000000E+0      0.00000000000000E+0      0.00000000000000E+0
0.00000000000000E+0      0.00000000000000E+0
   BmDistLoadG              7      264       Z       1      2.31000000000000E+0
2.31000000000000E+0      0.00000000000000E+0      0.00000000000000E+0
0.00000000000000E+0      0.00000000000000E+0
   BmDistLoadG              7      265       Z       1      2.31000000000000E+0
2.31000000000000E+0      0.00000000000000E+0      0.00000000000000E+0
0.00000000000000E+0      0.00000000000000E+0
   BmDistLoadG              7      266       Z       1      2.31000000000000E+0
2.31000000000000E+0      0.00000000000000E+0      0.00000000000000E+0
0.00000000000000E+0      0.00000000000000E+0
   BmDistLoadG              7      267       Z       1      2.31000000000000E+0
2.31000000000000E+0      0.00000000000000E+0      0.00000000000000E+0
0.00000000000000E+0      0.00000000000000E+0
   BmDistLoadG              7      268       Z       1      2.31000000000000E+0
2.31000000000000E+0      0.00000000000000E+0      0.00000000000000E+0
0.00000000000000E+0      0.00000000000000E+0
   BmDistLoadG              7      269       Z       1      2.31000000000000E+0
2.31000000000000E+0      0.00000000000000E+0      0.00000000000000E+0
0.00000000000000E+0      0.00000000000000E+0
   BmDistLoadG              7      270       Z       1      2.31000000000000E+0
2.31000000000000E+0      0.00000000000000E+0      0.00000000000000E+0
0.00000000000000E+0      0.00000000000000E+0
   BmDistLoadG              7      271       Z       1      2.31000000000000E+0
2.31000000000000E+0      0.00000000000000E+0      0.00000000000000E+0
0.00000000000000E+0      0.00000000000000E+0
   BmDistLoadG              7      272       Z       1      2.31000000000000E+0
2.31000000000000E+0      0.00000000000000E+0      0.00000000000000E+0
0.00000000000000E+0      0.00000000000000E+0
   BmDistLoadG              7      273       Z       1      2.31000000000000E+0
2.31000000000000E+0      0.00000000000000E+0      0.00000000000000E+0
0.00000000000000E+0      0.00000000000000E+0
   BmDistLoadG              7      274       Z       1      2.31000000000000E+0
2.31000000000000E+0      0.00000000000000E+0      0.00000000000000E+0
0.00000000000000E+0      0.00000000000000E+0
   BmDistLoadG              7      275       Z       1      2.31000000000000E+0
```

```
2.31000000000000E+0      0.00000000000000E+0      0.00000000000000E+0
0.00000000000000E+0      0.00000000000000E+0
   BmDistLoadG              7     276        Z      1     2.31000000000000E+0
2.31000000000000E+0      0.00000000000000E+0      0.00000000000000E+0
0.00000000000000E+0      0.00000000000000E+0
   BmDistLoadG              7     277        Z      1     2.31000000000000E+0
2.31000000000000E+0      0.00000000000000E+0      0.00000000000000E+0
0.00000000000000E+0      0.00000000000000E+0
   BmDistLoadG              7     278        Z      1     2.31000000000000E+0
2.31000000000000E+0      0.00000000000000E+0      0.00000000000000E+0
0.00000000000000E+0      0.00000000000000E+0
   BmDistLoadG              7     279        Z      1     2.31000000000000E+0
2.31000000000000E+0      0.00000000000000E+0      0.00000000000000E+0
0.00000000000000E+0      0.00000000000000E+0
   BmDistLoadG              7     280        Z      1     2.31000000000000E+0
2.31000000000000E+0      0.00000000000000E+0      0.00000000000000E+0
0.00000000000000E+0      0.00000000000000E+0
   BmDistLoadG              7     281        Z      1     2.31000000000000E+0
2.31000000000000E+0      0.00000000000000E+0      0.00000000000000E+0
0.00000000000000E+0      0.00000000000000E+0
   BmDistLoadG              7     282        Z      1     2.31000000000000E+0
2.31000000000000E+0      0.00000000000000E+0      0.00000000000000E+0
0.00000000000000E+0      0.00000000000000E+0
   BmDistLoadG              7     283        Z      1     2.31000000000000E+0
2.31000000000000E+0      0.00000000000000E+0      0.00000000000000E+0
0.00000000000000E+0      0.00000000000000E+0
   BmDistLoadG              7     284        Z      1     2.31000000000000E+0
2.31000000000000E+0      0.00000000000000E+0      0.00000000000000E+0
0.00000000000000E+0      0.00000000000000E+0
   BmDistLoadG              7     285        Z      1     2.31000000000000E+0
2.31000000000000E+0      0.00000000000000E+0      0.00000000000000E+0
0.00000000000000E+0      0.00000000000000E+0
   BmDistLoadG              7     286        Z      1     2.31000000000000E+0
2.31000000000000E+0      0.00000000000000E+0      0.00000000000000E+0
0.00000000000000E+0      0.00000000000000E+0
   BmDistLoadG              7     287        Z      1     2.31000000000000E+0
2.31000000000000E+0      0.00000000000000E+0      0.00000000000000E+0
0.00000000000000E+0      0.00000000000000E+0
   BmDistLoadG              7     288        Z      1     2.31000000000000E+0
2.31000000000000E+0      0.00000000000000E+0      0.00000000000000E+0
0.00000000000000E+0      0.00000000000000E+0
   BmDistLoadG              7     289        Z      1     2.31000000000000E+0
2.31000000000000E+0      0.00000000000000E+0      0.00000000000000E+0
0.00000000000000E+0      0.00000000000000E+0
   BmDistLoadG              7     290        Z      1     2.31000000000000E+0
2.31000000000000E+0      0.00000000000000E+0      0.00000000000000E+0
0.00000000000000E+0      0.00000000000000E+0
   BmDistLoadG              7     291        Z      1     2.31000000000000E+0
2.31000000000000E+0      0.00000000000000E+0      0.00000000000000E+0
0.00000000000000E+0      0.00000000000000E+0
   BmDistLoadG              7     292        Z      1     2.31000000000000E+0
2.31000000000000E+0      0.00000000000000E+0      0.00000000000000E+0
0.00000000000000E+0      0.00000000000000E+0
   BmDistLoadG              7     293        Z      1     2.31000000000000E+0
```

```
2.31000000000000E+0      0.00000000000000E+0      0.00000000000000E+0
0.00000000000000E+0      0.00000000000000E+0
   BmDistLoadG              7     294      Z      1     2.31000000000000E+0
2.31000000000000E+0      0.00000000000000E+0      0.00000000000000E+0
0.00000000000000E+0      0.00000000000000E+0
   BmDistLoadG              7     295      Z      1     2.31000000000000E+0
2.31000000000000E+0      0.00000000000000E+0      0.00000000000000E+0
0.00000000000000E+0      0.00000000000000E+0
   BmDistLoadG              7     296      Z      1     2.31000000000000E+0
2.31000000000000E+0      0.00000000000000E+0      0.00000000000000E+0
0.00000000000000E+0      0.00000000000000E+0
   BmDistLoadG              7     297      Z      1     2.31000000000000E+0
2.31000000000000E+0      0.00000000000000E+0      0.00000000000000E+0
0.00000000000000E+0      0.00000000000000E+0
   BmDistLoadG              7     298      Z      1     2.31000000000000E+0
2.31000000000000E+0      0.00000000000000E+0      0.00000000000000E+0
0.00000000000000E+0      0.00000000000000E+0
   BmDistLoadG              7     299      Z      1     2.31000000000000E+0
2.31000000000000E+0      0.00000000000000E+0      0.00000000000000E+0
0.00000000000000E+0      0.00000000000000E+0
   BmDistLoadG              7     300      Z      1     2.31000000000000E+0
2.31000000000000E+0      0.00000000000000E+0      0.00000000000000E+0
0.00000000000000E+0      0.00000000000000E+0
   BmDistLoadG              7     301      Z      1     2.31000000000000E+0
2.31000000000000E+0      0.00000000000000E+0      0.00000000000000E+0
0.00000000000000E+0      0.00000000000000E+0
   BmDistLoadG              7     302      Z      1     2.31000000000000E+0
2.31000000000000E+0      0.00000000000000E+0      0.00000000000000E+0
0.00000000000000E+0      0.00000000000000E+0
   BmDistLoadG              7     303      Z      1     2.31000000000000E+0
2.31000000000000E+0      0.00000000000000E+0      0.00000000000000E+0
0.00000000000000E+0      0.00000000000000E+0
   BmDistLoadG              7     304      Z      1     2.31000000000000E+0
2.31000000000000E+0      0.00000000000000E+0      0.00000000000000E+0
0.00000000000000E+0      0.00000000000000E+0
   BmDistLoadG              7     305      Z      1     2.31000000000000E+0
2.31000000000000E+0      0.00000000000000E+0      0.00000000000000E+0
0.00000000000000E+0      0.00000000000000E+0
   BmDistLoadG              7     306      Z      1     2.31000000000000E+0
2.31000000000000E+0      0.00000000000000E+0      0.00000000000000E+0
0.00000000000000E+0      0.00000000000000E+0
   BmDistLoadG              7     307      Z      1     2.31000000000000E+0
2.31000000000000E+0      0.00000000000000E+0      0.00000000000000E+0
0.00000000000000E+0      0.00000000000000E+0
   BmDistLoadG              7     308      Z      1     2.31000000000000E+0
2.31000000000000E+0      0.00000000000000E+0      0.00000000000000E+0
0.00000000000000E+0      0.00000000000000E+0
   BmDistLoadG              7     309      Z      1     2.31000000000000E+0
2.31000000000000E+0      0.00000000000000E+0      0.00000000000000E+0
0.00000000000000E+0      0.00000000000000E+0
   BmDistLoadG              7     310      Z      1     2.31000000000000E+0
2.31000000000000E+0      0.00000000000000E+0      0.00000000000000E+0
0.00000000000000E+0      0.00000000000000E+0
   BmDistLoadG              7     311      Z      1     2.31000000000000E+0
```

```
2.31000000000000E+0      0.00000000000000E+0      0.00000000000000E+0
0.00000000000000E+0      0.00000000000000E+0
   BmDistLoadG              7     312      Z      1     2.31000000000000E+0
2.31000000000000E+0      0.00000000000000E+0      0.00000000000000E+0
0.00000000000000E+0      0.00000000000000E+0
   BmDistLoadG              7     313      Z      1     2.31000000000000E+0
2.31000000000000E+0      0.00000000000000E+0      0.00000000000000E+0
0.00000000000000E+0      0.00000000000000E+0
   BmDistLoadG              7     314      Z      1     2.31000000000000E+0
2.31000000000000E+0      0.00000000000000E+0      0.00000000000000E+0
0.00000000000000E+0      0.00000000000000E+0
   BmDistLoadG              7     315      Z      1     2.31000000000000E+0
2.31000000000000E+0      0.00000000000000E+0      0.00000000000000E+0
0.00000000000000E+0      0.00000000000000E+0
   BmDistLoadG              7     316      Z      1     2.31000000000000E+0
2.31000000000000E+0      0.00000000000000E+0      0.00000000000000E+0
0.00000000000000E+0      0.00000000000000E+0
   BmDistLoadG              7     317      Z      1     2.31000000000000E+0
2.31000000000000E+0      0.00000000000000E+0      0.00000000000000E+0
0.00000000000000E+0      0.00000000000000E+0
   BmDistLoadG              7     318      Z      1     2.31000000000000E+0
2.31000000000000E+0      0.00000000000000E+0      0.00000000000000E+0
0.00000000000000E+0      0.00000000000000E+0
   BmDistLoadG              7     319      Z      1     2.31000000000000E+0
2.31000000000000E+0      0.00000000000000E+0      0.00000000000000E+0
0.00000000000000E+0      0.00000000000000E+0
   BmDistLoadG              7     320      Z      1     2.31000000000000E+0
2.31000000000000E+0      0.00000000000000E+0      0.00000000000000E+0
0.00000000000000E+0      0.00000000000000E+0
   BmDistLoadG              7     321      Z      1     2.31000000000000E+0
2.31000000000000E+0      0.00000000000000E+0      0.00000000000000E+0
0.00000000000000E+0      0.00000000000000E+0
   BmDistLoadG              7     322      Z      1     2.31000000000000E+0
2.31000000000000E+0      0.00000000000000E+0      0.00000000000000E+0
0.00000000000000E+0      0.00000000000000E+0
   BmDistLoadG              7     323      Z      1     2.31000000000000E+0
2.31000000000000E+0      0.00000000000000E+0      0.00000000000000E+0
0.00000000000000E+0      0.00000000000000E+0
   BmDistLoadG              7     324      Z      1     2.31000000000000E+0
2.31000000000000E+0      0.00000000000000E+0      0.00000000000000E+0
0.00000000000000E+0      0.00000000000000E+0
   BmDistLoadG              7     325      Z      1     2.31000000000000E+0
2.31000000000000E+0      0.00000000000000E+0      0.00000000000000E+0
0.00000000000000E+0      0.00000000000000E+0
   BmDistLoadG              7     326      Z      1     2.31000000000000E+0
2.31000000000000E+0      0.00000000000000E+0      0.00000000000000E+0
0.00000000000000E+0      0.00000000000000E+0
   BmDistLoadG              7     327      Z      1     2.31000000000000E+0
2.31000000000000E+0      0.00000000000000E+0      0.00000000000000E+0
0.00000000000000E+0      0.00000000000000E+0
   BmDistLoadG              7     328      Z      1     2.31000000000000E+0
2.31000000000000E+0      0.00000000000000E+0      0.00000000000000E+0
0.00000000000000E+0      0.00000000000000E+0
   BmDistLoadG              7     329      Z      1     2.31000000000000E+0
```

```
2.31000000000000E+0       0.00000000000000E+0       0.00000000000000E+0
0.00000000000000E+0       0.00000000000000E+0
   BmDistLoadG               7      330       Z        1      2.31000000000000E+0
2.31000000000000E+0       0.00000000000000E+0       0.00000000000000E+0
0.00000000000000E+0       0.00000000000000E+0
   BmDistLoadG               7      331       Z        1      2.31000000000000E+0
2.31000000000000E+0       0.00000000000000E+0       0.00000000000000E+0
0.00000000000000E+0       0.00000000000000E+0
   BmDistLoadG               7      332       Z        1      2.31000000000000E+0
2.31000000000000E+0       0.00000000000000E+0       0.00000000000000E+0
0.00000000000000E+0       0.00000000000000E+0
   BmDistLoadG               7      333       Z        1      2.31000000000000E+0
2.31000000000000E+0       0.00000000000000E+0       0.00000000000000E+0
0.00000000000000E+0       0.00000000000000E+0
   BmDistLoadG               7      334       Z        1      2.31000000000000E+0
2.31000000000000E+0       0.00000000000000E+0       0.00000000000000E+0
0.00000000000000E+0       0.00000000000000E+0
   BmDistLoadG               7      335       Z        1      2.31000000000000E+0
2.31000000000000E+0       0.00000000000000E+0       0.00000000000000E+0
0.00000000000000E+0       0.00000000000000E+0
   BmDistLoadG               7      336       Z        1      2.31000000000000E+0
2.31000000000000E+0       0.00000000000000E+0       0.00000000000000E+0
0.00000000000000E+0       0.00000000000000E+0
   BmDistLoadG               7      337       Z        1      2.31000000000000E+0
2.31000000000000E+0       0.00000000000000E+0       0.00000000000000E+0
0.00000000000000E+0       0.00000000000000E+0
   BmDistLoadG               7      338       Z        1      2.31000000000000E+0
2.31000000000000E+0       0.00000000000000E+0       0.00000000000000E+0
0.00000000000000E+0       0.00000000000000E+0
   BmDistLoadG               7      339       Z        1      2.31000000000000E+0
2.31000000000000E+0       0.00000000000000E+0       0.00000000000000E+0
0.00000000000000E+0       0.00000000000000E+0
   BmDistLoadG               7      340       Z        1      2.31000000000000E+0
2.31000000000000E+0       0.00000000000000E+0       0.00000000000000E+0
0.00000000000000E+0       0.00000000000000E+0
   BmDistLoadG               7      341       Z        1      2.31000000000000E+0
2.31000000000000E+0       0.00000000000000E+0       0.00000000000000E+0
0.00000000000000E+0       0.00000000000000E+0
   BmDistLoadG               7      342       Z        1      2.31000000000000E+0
2.31000000000000E+0       0.00000000000000E+0       0.00000000000000E+0
0.00000000000000E+0       0.00000000000000E+0
   BmDistLoadG               7      343       Z        1      2.31000000000000E+0
2.31000000000000E+0       0.00000000000000E+0       0.00000000000000E+0
0.00000000000000E+0       0.00000000000000E+0
   BmDistLoadG               7      344       Z        1      2.31000000000000E+0
2.31000000000000E+0       0.00000000000000E+0       0.00000000000000E+0
0.00000000000000E+0       0.00000000000000E+0
   BmDistLoadG               7      345       Z        1      2.31000000000000E+0
2.31000000000000E+0       0.00000000000000E+0       0.00000000000000E+0
0.00000000000000E+0       0.00000000000000E+0
   BmDistLoadG               7      346       Z        1      2.31000000000000E+0
2.31000000000000E+0       0.00000000000000E+0       0.00000000000000E+0
0.00000000000000E+0       0.00000000000000E+0
   BmDistLoadG               7      347       Z        1      2.31000000000000E+0
```

```
2.31000000000000E+0      0.00000000000000E+0      0.00000000000000E+0
0.00000000000000E+0      0.00000000000000E+0
   BmDistLoadG              7      348       Z      1      2.31000000000000E+0
2.31000000000000E+0      0.00000000000000E+0      0.00000000000000E+0
0.00000000000000E+0      0.00000000000000E+0
   BmDistLoadG              7      349       Z      1      2.31000000000000E+0
2.31000000000000E+0      0.00000000000000E+0      0.00000000000000E+0
0.00000000000000E+0      0.00000000000000E+0
   BmDistLoadG              7      350       Z      1      2.31000000000000E+0
2.31000000000000E+0      0.00000000000000E+0      0.00000000000000E+0
0.00000000000000E+0      0.00000000000000E+0
   BmDistLoadG              7      351       Z      1      2.31000000000000E+0
2.31000000000000E+0      0.00000000000000E+0      0.00000000000000E+0
0.00000000000000E+0      0.00000000000000E+0
   BmDistLoadG              7      352       Z      1      2.31000000000000E+0
2.31000000000000E+0      0.00000000000000E+0      0.00000000000000E+0
0.00000000000000E+0      0.00000000000000E+0
   BmDistLoadG              7      353       Z      1      2.31000000000000E+0
2.31000000000000E+0      0.00000000000000E+0      0.00000000000000E+0
0.00000000000000E+0      0.00000000000000E+0
   BmDistLoadG              7      354       Z      1      2.31000000000000E+0
2.31000000000000E+0      0.00000000000000E+0      0.00000000000000E+0
0.00000000000000E+0      0.00000000000000E+0
   BmDistLoadG              7      355       Z      1      2.31000000000000E+0
2.31000000000000E+0      0.00000000000000E+0      0.00000000000000E+0
0.00000000000000E+0      0.00000000000000E+0
   BmDistLoadG              7      356       Z      1      2.31000000000000E+0
2.31000000000000E+0      0.00000000000000E+0      0.00000000000000E+0
0.00000000000000E+0      0.00000000000000E+0
   BmDistLoadG              7      357       Z      1      2.31000000000000E+0
2.31000000000000E+0      0.00000000000000E+0      0.00000000000000E+0
0.00000000000000E+0      0.00000000000000E+0
   BmDistLoadG              7      358       Z      1      2.31000000000000E+0
2.31000000000000E+0      0.00000000000000E+0      0.00000000000000E+0
0.00000000000000E+0      0.00000000000000E+0
   BmDistLoadG              7      359       Z      1      2.31000000000000E+0
2.31000000000000E+0      0.00000000000000E+0      0.00000000000000E+0
0.00000000000000E+0      0.00000000000000E+0
   BmDistLoadG              7      360       Z      1      2.31000000000000E+0
2.31000000000000E+0      0.00000000000000E+0      0.00000000000000E+0
0.00000000000000E+0      0.00000000000000E+0
   BmDistLoadG              7      361       Z      1      2.31000000000000E+0
2.31000000000000E+0      0.00000000000000E+0      0.00000000000000E+0
0.00000000000000E+0      0.00000000000000E+0
   BmDistLoadG              7      362       Z      1      2.31000000000000E+0
2.31000000000000E+0      0.00000000000000E+0      0.00000000000000E+0
0.00000000000000E+0      0.00000000000000E+0
   BmDistLoadG              7      363       Z      1      2.31000000000000E+0
2.31000000000000E+0      0.00000000000000E+0      0.00000000000000E+0
0.00000000000000E+0      0.00000000000000E+0
   BmDistLoadG              7      364       Z      1      2.31000000000000E+0
2.31000000000000E+0      0.00000000000000E+0      0.00000000000000E+0
0.00000000000000E+0      0.00000000000000E+0
   BmDistLoadG              7      365       Z      1      2.31000000000000E+0
```

```
2.31000000000000E+0      0.00000000000000E+0      0.00000000000000E+0
0.00000000000000E+0      0.00000000000000E+0
   BmDistLoadG              7     366      Z      1     2.31000000000000E+0
2.31000000000000E+0      0.00000000000000E+0      0.00000000000000E+0
0.00000000000000E+0      0.00000000000000E+0
   BmDistLoadG              7     367      Z      1     2.31000000000000E+0
2.31000000000000E+0      0.00000000000000E+0      0.00000000000000E+0
0.00000000000000E+0      0.00000000000000E+0
   BmDistLoadG              7     368      Z      1     2.31000000000000E+0
2.31000000000000E+0      0.00000000000000E+0      0.00000000000000E+0
0.00000000000000E+0      0.00000000000000E+0
   BmDistLoadG              7     369      Z      1     2.31000000000000E+0
2.31000000000000E+0      0.00000000000000E+0      0.00000000000000E+0
0.00000000000000E+0      0.00000000000000E+0
   BmDistLoadG              7     370      Z      1     2.31000000000000E+0
2.31000000000000E+0      0.00000000000000E+0      0.00000000000000E+0
0.00000000000000E+0      0.00000000000000E+0
   BmDistLoadG              7     371      Z      1     2.31000000000000E+0
2.31000000000000E+0      0.00000000000000E+0      0.00000000000000E+0
0.00000000000000E+0      0.00000000000000E+0
   BmDistLoadG              7     372      Z      1     2.31000000000000E+0
2.31000000000000E+0      0.00000000000000E+0      0.00000000000000E+0
0.00000000000000E+0      0.00000000000000E+0
   BmDistLoadG              7     373      Z      1     2.31000000000000E+0
2.31000000000000E+0      0.00000000000000E+0      0.00000000000000E+0
0.00000000000000E+0      0.00000000000000E+0
   BmDistLoadG              7     374      Z      1     2.31000000000000E+0
2.31000000000000E+0      0.00000000000000E+0      0.00000000000000E+0
0.00000000000000E+0      0.00000000000000E+0
   BmDistLoadG              7     375      Z      1     2.31000000000000E+0
2.31000000000000E+0      0.00000000000000E+0      0.00000000000000E+0
0.00000000000000E+0      0.00000000000000E+0
   BmDistLoadG              7     376      Z      1     2.31000000000000E+0
2.31000000000000E+0      0.00000000000000E+0      0.00000000000000E+0
0.00000000000000E+0      0.00000000000000E+0
   BmDistLoadG              7     377      Z      1     2.31000000000000E+0
2.31000000000000E+0      0.00000000000000E+0      0.00000000000000E+0
0.00000000000000E+0      0.00000000000000E+0
   BmDistLoadG              7     378      Z      1     2.31000000000000E+0
2.31000000000000E+0      0.00000000000000E+0      0.00000000000000E+0
0.00000000000000E+0      0.00000000000000E+0
   BmDistLoadG              7     379      Z      1     2.31000000000000E+0
2.31000000000000E+0      0.00000000000000E+0      0.00000000000000E+0
0.00000000000000E+0      0.00000000000000E+0
   BmDistLoadG              7     380      Z      1     2.31000000000000E+0
2.31000000000000E+0      0.00000000000000E+0      0.00000000000000E+0
0.00000000000000E+0      0.00000000000000E+0
   BmDistLoadG              7     381      Z      1     2.31000000000000E+0
2.31000000000000E+0      0.00000000000000E+0      0.00000000000000E+0
0.00000000000000E+0      0.00000000000000E+0
   BmDistLoadG              7     382      Z      1     2.31000000000000E+0
2.31000000000000E+0      0.00000000000000E+0      0.00000000000000E+0
0.00000000000000E+0      0.00000000000000E+0
   BmDistLoadG              7     383      Z      1     2.31000000000000E+0
```

```
2.31000000000000E+0      0.00000000000000E+0      0.00000000000000E+0
0.00000000000000E+0      0.00000000000000E+0
   BmDistLoadG              7     384      Z      1     2.31000000000000E+0
2.31000000000000E+0      0.00000000000000E+0      0.00000000000000E+0
0.00000000000000E+0      0.00000000000000E+0
   BmDistLoadG              7     385      Z      1     2.31000000000000E+0
2.31000000000000E+0      0.00000000000000E+0      0.00000000000000E+0
0.00000000000000E+0      0.00000000000000E+0
   BmDistLoadG              7     386      Z      1     2.31000000000000E+0
2.31000000000000E+0      0.00000000000000E+0      0.00000000000000E+0
0.00000000000000E+0      0.00000000000000E+0
   BmDistLoadG              7     387      Z      1     2.31000000000000E+0
2.31000000000000E+0      0.00000000000000E+0      0.00000000000000E+0
0.00000000000000E+0      0.00000000000000E+0
   BmDistLoadG              7     388      Z      1     2.31000000000000E+0
2.31000000000000E+0      0.00000000000000E+0      0.00000000000000E+0
0.00000000000000E+0      0.00000000000000E+0
   BmDistLoadG              7     389      Z      1     2.31000000000000E+0
2.31000000000000E+0      0.00000000000000E+0      0.00000000000000E+0
0.00000000000000E+0      0.00000000000000E+0
   BmDistLoadG              7     390      Z      1     2.31000000000000E+0
2.31000000000000E+0      0.00000000000000E+0      0.00000000000000E+0
0.00000000000000E+0      0.00000000000000E+0
   BmDistLoadG              7     391      Z      1     2.31000000000000E+0
2.31000000000000E+0      0.00000000000000E+0      0.00000000000000E+0
0.00000000000000E+0      0.00000000000000E+0
   BmDistLoadG              7     392      Z      1     2.31000000000000E+0
2.31000000000000E+0      0.00000000000000E+0      0.00000000000000E+0
0.00000000000000E+0      0.00000000000000E+0
   BmDistLoadG              7     393      Z      1     2.31000000000000E+0
2.31000000000000E+0      0.00000000000000E+0      0.00000000000000E+0
0.00000000000000E+0      0.00000000000000E+0
   BmDistLoadG              7     394      Z      1     2.31000000000000E+0
2.31000000000000E+0      0.00000000000000E+0      0.00000000000000E+0
0.00000000000000E+0      0.00000000000000E+0
   BmDistLoadG              7     395      Z      1     2.31000000000000E+0
2.31000000000000E+0      0.00000000000000E+0      0.00000000000000E+0
0.00000000000000E+0      0.00000000000000E+0
   BmDistLoadG              7     396      Z      1     2.31000000000000E+0
2.31000000000000E+0      0.00000000000000E+0      0.00000000000000E+0
0.00000000000000E+0      0.00000000000000E+0
   BmDistLoadG              7     397      Z      1     2.31000000000000E+0
2.31000000000000E+0      0.00000000000000E+0      0.00000000000000E+0
0.00000000000000E+0      0.00000000000000E+0
   BmDistLoadG              7     398      Z      1     2.31000000000000E+0
2.31000000000000E+0      0.00000000000000E+0      0.00000000000000E+0
0.00000000000000E+0      0.00000000000000E+0
   BmDistLoadG              7     399      Z      1     2.31000000000000E+0
2.31000000000000E+0      0.00000000000000E+0      0.00000000000000E+0
0.00000000000000E+0      0.00000000000000E+0
   BmDistLoadG              7     400      Z      1     2.31000000000000E+0
2.31000000000000E+0      0.00000000000000E+0      0.00000000000000E+0
0.00000000000000E+0      0.00000000000000E+0
   BmDistLoadG              7     401      Z      1     2.31000000000000E+0
```

```
2.31000000000000E+0      0.00000000000000E+0      0.00000000000000E+0
0.00000000000000E+0      0.00000000000000E+0
   BmDistLoadG              7     402      Z      1     2.31000000000000E+0
2.31000000000000E+0      0.00000000000000E+0      0.00000000000000E+0
0.00000000000000E+0      0.00000000000000E+0
   BmDistLoadG              7     403      Z      1     2.31000000000000E+0
2.31000000000000E+0      0.00000000000000E+0      0.00000000000000E+0
0.00000000000000E+0      0.00000000000000E+0
   BmDistLoadG              7     404      Z      1     2.31000000000000E+0
2.31000000000000E+0      0.00000000000000E+0      0.00000000000000E+0
0.00000000000000E+0      0.00000000000000E+0
   BmDistLoadG              7     405      Z      1     2.31000000000000E+0
2.31000000000000E+0      0.00000000000000E+0      0.00000000000000E+0
0.00000000000000E+0      0.00000000000000E+0
   BmDistLoadG              7     406      Z      1     2.31000000000000E+0
2.31000000000000E+0      0.00000000000000E+0      0.00000000000000E+0
0.00000000000000E+0      0.00000000000000E+0
   BmDistLoadG              7     407      Z      1     2.31000000000000E+0
2.31000000000000E+0      0.00000000000000E+0      0.00000000000000E+0
0.00000000000000E+0      0.00000000000000E+0
   BmDistLoadG              7     408      Z      1     2.31000000000000E+0
2.31000000000000E+0      0.00000000000000E+0      0.00000000000000E+0
0.00000000000000E+0      0.00000000000000E+0
   BmDistLoadG              7     409      Z      1     2.31000000000000E+0
2.31000000000000E+0      0.00000000000000E+0      0.00000000000000E+0
0.00000000000000E+0      0.00000000000000E+0
   BmDistLoadG              7     410      Z      1     2.31000000000000E+0
2.31000000000000E+0      0.00000000000000E+0      0.00000000000000E+0
0.00000000000000E+0      0.00000000000000E+0
   BmDistLoadG              7     411      Z      1     2.31000000000000E+0
2.31000000000000E+0      0.00000000000000E+0      0.00000000000000E+0
0.00000000000000E+0      0.00000000000000E+0
   BmDistLoadG              7     412      Z      1     2.31000000000000E+0
2.31000000000000E+0      0.00000000000000E+0      0.00000000000000E+0
0.00000000000000E+0      0.00000000000000E+0
   BmDistLoadG              7     413      Z      1     2.31000000000000E+0
2.31000000000000E+0      0.00000000000000E+0      0.00000000000000E+0
0.00000000000000E+0      0.00000000000000E+0
   BmDistLoadG              7     414      Z      1     2.31000000000000E+0
2.31000000000000E+0      0.00000000000000E+0      0.00000000000000E+0
0.00000000000000E+0      0.00000000000000E+0
   BmDistLoadG              7     415      Z      1     2.31000000000000E+0
2.31000000000000E+0      0.00000000000000E+0      0.00000000000000E+0
0.00000000000000E+0      0.00000000000000E+0
   BmDistLoadG              7     416      Z      1     2.31000000000000E+0
2.31000000000000E+0      0.00000000000000E+0      0.00000000000000E+0
0.00000000000000E+0      0.00000000000000E+0
   BmDistLoadG              7     417      Z      1     2.31000000000000E+0
2.31000000000000E+0      0.00000000000000E+0      0.00000000000000E+0
0.00000000000000E+0      0.00000000000000E+0
   BmDistLoadG              7     418      Z      1     2.31000000000000E+0
2.31000000000000E+0      0.00000000000000E+0      0.00000000000000E+0
0.00000000000000E+0      0.00000000000000E+0
   BmDistLoadG              7     419      Z      1     2.31000000000000E+0
```

```
2.31000000000000E+0      0.00000000000000E+0      0.00000000000000E+0
0.00000000000000E+0      0.00000000000000E+0
   BmDistLoadG              7     420      Z      1     2.31000000000000E+0
2.31000000000000E+0      0.00000000000000E+0      0.00000000000000E+0
0.00000000000000E+0      0.00000000000000E+0
   BmDistLoadG              7     421      Z      1     2.31000000000000E+0
2.31000000000000E+0      0.00000000000000E+0      0.00000000000000E+0
0.00000000000000E+0      0.00000000000000E+0
   BmDistLoadG              7     422      Z      1     2.31000000000000E+0
2.31000000000000E+0      0.00000000000000E+0      0.00000000000000E+0
0.00000000000000E+0      0.00000000000000E+0
   BmDistLoadG              7     423      Z      1     2.31000000000000E+0
2.31000000000000E+0      0.00000000000000E+0      0.00000000000000E+0
0.00000000000000E+0      0.00000000000000E+0
   BmDistLoadG              7     424      Z      1     2.31000000000000E+0
2.31000000000000E+0      0.00000000000000E+0      0.00000000000000E+0
0.00000000000000E+0      0.00000000000000E+0
   BmDistLoadG              7     425      Z      1     2.31000000000000E+0
2.31000000000000E+0      0.00000000000000E+0      0.00000000000000E+0
0.00000000000000E+0      0.00000000000000E+0
   BmDistLoadG              7     426      Z      1     2.31000000000000E+0
2.31000000000000E+0      0.00000000000000E+0      0.00000000000000E+0
0.00000000000000E+0      0.00000000000000E+0
   BmDistLoadG              7     427      Z      1     2.31000000000000E+0
2.31000000000000E+0      0.00000000000000E+0      0.00000000000000E+0
0.00000000000000E+0      0.00000000000000E+0
   BmDistLoadG              7     428      Z      1     2.31000000000000E+0
2.31000000000000E+0      0.00000000000000E+0      0.00000000000000E+0
0.00000000000000E+0      0.00000000000000E+0
   BmDistLoadG              7     429      Z      1     2.31000000000000E+0
2.31000000000000E+0      0.00000000000000E+0      0.00000000000000E+0
0.00000000000000E+0      0.00000000000000E+0
   BmDistLoadG              7     430      Z      1     2.31000000000000E+0
2.31000000000000E+0      0.00000000000000E+0      0.00000000000000E+0
0.00000000000000E+0      0.00000000000000E+0
   BmDistLoadG              7     431      Z      1     2.31000000000000E+0
2.31000000000000E+0      0.00000000000000E+0      0.00000000000000E+0
0.00000000000000E+0      0.00000000000000E+0
   BmDistLoadG              7     432      Z      1     2.31000000000000E+0
2.31000000000000E+0      0.00000000000000E+0      0.00000000000000E+0
0.00000000000000E+0      0.00000000000000E+0
   BmDistLoadG              7     433      Z      1     2.31000000000000E+0
2.31000000000000E+0      0.00000000000000E+0      0.00000000000000E+0
0.00000000000000E+0      0.00000000000000E+0
   BmDistLoadG              7     434      Y      1     3.30000000000000E+0
3.30000000000000E+0      0.00000000000000E+0      0.00000000000000E+0
0.00000000000000E+0      0.00000000000000E+0
   BmDistLoadG              7     435      Y      1     3.30000000000000E+0
3.30000000000000E+0      0.00000000000000E+0      0.00000000000000E+0
0.00000000000000E+0      0.00000000000000E+0
   BmDistLoadG              7     436      Y      1     3.30000000000000E+0
3.30000000000000E+0      0.00000000000000E+0      0.00000000000000E+0
0.00000000000000E+0      0.00000000000000E+0
   BmDistLoadG              7     437      Y      1     3.30000000000000E+0
```

```
3.30000000000000E+0      0.00000000000000E+0      0.00000000000000E+0
0.00000000000000E+0      0.00000000000000E+0
   BmDistLoadG              7     438      Y      1     3.30000000000000E+0
3.30000000000000E+0      0.00000000000000E+0      0.00000000000000E+0
0.00000000000000E+0      0.00000000000000E+0
   BmDistLoadG              7     559      Y      1     1.76000000000000E+0
1.76000000000000E+0      0.00000000000000E+0      0.00000000000000E+0
0.00000000000000E+0      0.00000000000000E+0
   BmDistLoadG              7     560      Y      1     1.76000000000000E+0
1.76000000000000E+0      0.00000000000000E+0      0.00000000000000E+0
0.00000000000000E+0      0.00000000000000E+0
   BmDistLoadG              7     561      Y      1     1.76000000000000E+0
1.76000000000000E+0      0.00000000000000E+0      0.00000000000000E+0
0.00000000000000E+0      0.00000000000000E+0
   BmDistLoadG              7     562      Y      1     1.76000000000000E+0
1.76000000000000E+0      0.00000000000000E+0      0.00000000000000E+0
0.00000000000000E+0      0.00000000000000E+0
   BmDistLoadG              7     563      Y      1     1.76000000000000E+0
1.76000000000000E+0      0.00000000000000E+0      0.00000000000000E+0
0.00000000000000E+0      0.00000000000000E+0
   BmDistLoadG              7     564      Y      1     1.76000000000000E+0
1.76000000000000E+0      0.00000000000000E+0      0.00000000000000E+0
0.00000000000000E+0      0.00000000000000E+0
   BmDistLoadG              7     565      Y      1     1.76000000000000E+0
1.76000000000000E+0      0.00000000000000E+0      0.00000000000000E+0
0.00000000000000E+0      0.00000000000000E+0
   BmDistLoadG              7     566      Y      1     1.76000000000000E+0
1.76000000000000E+0      0.00000000000000E+0      0.00000000000000E+0
0.00000000000000E+0      0.00000000000000E+0
   BmDistLoadG              7     567      Y      1     1.76000000000000E+0
1.76000000000000E+0      0.00000000000000E+0      0.00000000000000E+0
0.00000000000000E+0      0.00000000000000E+0
   BmDistLoadG              7     568      Y      1     1.76000000000000E+0
1.76000000000000E+0      0.00000000000000E+0      0.00000000000000E+0
0.00000000000000E+0      0.00000000000000E+0
   BmDistLoadG              7     569      Y      1     1.76000000000000E+0
1.76000000000000E+0      0.00000000000000E+0      0.00000000000000E+0
0.00000000000000E+0      0.00000000000000E+0
   BmDistLoadG              7     570      Y      1     1.76000000000000E+0
1.76000000000000E+0      0.00000000000000E+0      0.00000000000000E+0
0.00000000000000E+0      0.00000000000000E+0
   BmDistLoadG              7     571      Y      1     1.76000000000000E+0
1.76000000000000E+0      0.00000000000000E+0      0.00000000000000E+0
0.00000000000000E+0      0.00000000000000E+0
   BmDistLoadG              7     572      Y      1     1.76000000000000E+0
1.76000000000000E+0      0.00000000000000E+0      0.00000000000000E+0
0.00000000000000E+0      0.00000000000000E+0
   BmDistLoadG              7     573      Y      1     1.76000000000000E+0
1.76000000000000E+0      0.00000000000000E+0      0.00000000000000E+0
0.00000000000000E+0      0.00000000000000E+0
   BmDistLoadG              7     574      Y      1     1.76000000000000E+0
1.76000000000000E+0      0.00000000000000E+0      0.00000000000000E+0
0.00000000000000E+0      0.00000000000000E+0
   BmDistLoadG              7     575      Y      1     1.76000000000000E+0
```

```
1.76000000000000E+0      0.00000000000000E+0      0.00000000000000E+0
0.00000000000000E+0      0.00000000000000E+0
   BmDistLoadG              7     576       Y         1     1.76000000000000E+0
1.76000000000000E+0      0.00000000000000E+0      0.00000000000000E+0
0.00000000000000E+0      0.00000000000000E+0
   BmDistLoadG              7     577       Y         1     1.76000000000000E+0
1.76000000000000E+0      0.00000000000000E+0      0.00000000000000E+0
0.00000000000000E+0      0.00000000000000E+0
   BmDistLoadG              7     578       Y         1     1.76000000000000E+0
1.76000000000000E+0      0.00000000000000E+0      0.00000000000000E+0
0.00000000000000E+0      0.00000000000000E+0
   BmDistLoadG              7     579       Y         1     1.76000000000000E+0
1.76000000000000E+0      0.00000000000000E+0      0.00000000000000E+0
0.00000000000000E+0      0.00000000000000E+0
   BmDistLoadG              7     580       Y         1     1.76000000000000E+0
1.76000000000000E+0      0.00000000000000E+0      0.00000000000000E+0
0.00000000000000E+0      0.00000000000000E+0
   BmDistLoadG              7     581       Y         1     1.76000000000000E+0
1.76000000000000E+0      0.00000000000000E+0      0.00000000000000E+0
0.00000000000000E+0      0.00000000000000E+0
   BmDistLoadG              7     582       Y         1     1.76000000000000E+0
1.76000000000000E+0      0.00000000000000E+0      0.00000000000000E+0
0.00000000000000E+0      0.00000000000000E+0
   BmDistLoadG              7     583       Y         1     1.76000000000000E+0
1.76000000000000E+0      0.00000000000000E+0      0.00000000000000E+0
0.00000000000000E+0      0.00000000000000E+0
   BmDistLoadG              7     584       Y         1     1.76000000000000E+0
1.76000000000000E+0      0.00000000000000E+0      0.00000000000000E+0
0.00000000000000E+0      0.00000000000000E+0
   BmDistLoadG              7     585       Y         1     1.76000000000000E+0
1.76000000000000E+0      0.00000000000000E+0      0.00000000000000E+0
0.00000000000000E+0      0.00000000000000E+0
   BmDistLoadG              7     586       Y         1     1.76000000000000E+0
1.76000000000000E+0      0.00000000000000E+0      0.00000000000000E+0
0.00000000000000E+0      0.00000000000000E+0
   BmDistLoadG              7     587       Y         1     1.76000000000000E+0
1.76000000000000E+0      0.00000000000000E+0      0.00000000000000E+0
0.00000000000000E+0      0.00000000000000E+0
   BmDistLoadG              7     588       Y         1     1.76000000000000E+0
1.76000000000000E+0      0.00000000000000E+0      0.00000000000000E+0
0.00000000000000E+0      0.00000000000000E+0
   BmDistLoadG              7     589       Y         1     1.76000000000000E+0
1.76000000000000E+0      0.00000000000000E+0      0.00000000000000E+0
0.00000000000000E+0      0.00000000000000E+0
   BmDistLoadG              7     590       Y         1     1.76000000000000E+0
1.76000000000000E+0      0.00000000000000E+0      0.00000000000000E+0
0.00000000000000E+0      0.00000000000000E+0
   BmDistLoadG              7     591       Y         1     1.76000000000000E+0
1.76000000000000E+0      0.00000000000000E+0      0.00000000000000E+0
0.00000000000000E+0      0.00000000000000E+0
   BmDistLoadG              7     592       Y         1     1.76000000000000E+0
1.76000000000000E+0      0.00000000000000E+0      0.00000000000000E+0
0.00000000000000E+0      0.00000000000000E+0
   BmDistLoadG              7     593       Y         1     1.76000000000000E+0
```

```
1.76000000000000E+0       0.00000000000000E+0       0.00000000000000E+0
0.00000000000000E+0       0.00000000000000E+0
   BmDistLoadG               7      594       Y       1      1.76000000000000E+0
1.76000000000000E+0       0.00000000000000E+0       0.00000000000000E+0
0.00000000000000E+0       0.00000000000000E+0
   BmDistLoadG               7      595       Y       1      1.76000000000000E+0
1.76000000000000E+0       0.00000000000000E+0       0.00000000000000E+0
0.00000000000000E+0       0.00000000000000E+0
   BmDistLoadG               7      596       Y       1      1.76000000000000E+0
1.76000000000000E+0       0.00000000000000E+0       0.00000000000000E+0
0.00000000000000E+0       0.00000000000000E+0
   BmDistLoadG               7      597       Y       1      1.76000000000000E+0
1.76000000000000E+0       0.00000000000000E+0       0.00000000000000E+0
0.00000000000000E+0       0.00000000000000E+0
   BmDistLoadG               7      598       Y       1      1.76000000000000E+0
1.76000000000000E+0       0.00000000000000E+0       0.00000000000000E+0
0.00000000000000E+0       0.00000000000000E+0
   BmDistLoadG               7      599       Y       1      1.76000000000000E+0
1.76000000000000E+0       0.00000000000000E+0       0.00000000000000E+0
0.00000000000000E+0       0.00000000000000E+0
   BmDistLoadG               7      600       Y       1      1.76000000000000E+0
1.76000000000000E+0       0.00000000000000E+0       0.00000000000000E+0
0.00000000000000E+0       0.00000000000000E+0
   BmDistLoadG               7      601       Y       1      1.76000000000000E+0
1.76000000000000E+0       0.00000000000000E+0       0.00000000000000E+0
0.00000000000000E+0       0.00000000000000E+0
   BmDistLoadG               7      602       Y       1      1.76000000000000E+0
1.76000000000000E+0       0.00000000000000E+0       0.00000000000000E+0
0.00000000000000E+0       0.00000000000000E+0
   BmDistLoadG               7      603       Y       1      1.76000000000000E+0
1.76000000000000E+0       0.00000000000000E+0       0.00000000000000E+0
0.00000000000000E+0       0.00000000000000E+0
   BmDistLoadG               7      604       Y       1      1.76000000000000E+0
1.76000000000000E+0       0.00000000000000E+0       0.00000000000000E+0
0.00000000000000E+0       0.00000000000000E+0
   BmDistLoadG               7      605       Y       1      1.76000000000000E+0
1.76000000000000E+0       0.00000000000000E+0       0.00000000000000E+0
0.00000000000000E+0       0.00000000000000E+0
   BmDistLoadG               7      606       Y       1      1.76000000000000E+0
1.76000000000000E+0       0.00000000000000E+0       0.00000000000000E+0
0.00000000000000E+0       0.00000000000000E+0
   BmDistLoadG               7      607       Y       1      1.76000000000000E+0
1.76000000000000E+0       0.00000000000000E+0       0.00000000000000E+0
0.00000000000000E+0       0.00000000000000E+0
   BmDistLoadG               7      608       Y       1      1.76000000000000E+0
1.76000000000000E+0       0.00000000000000E+0       0.00000000000000E+0
0.00000000000000E+0       0.00000000000000E+0
   BmDistLoadG               7      609       Y       1      1.76000000000000E+0
1.76000000000000E+0       0.00000000000000E+0       0.00000000000000E+0
0.00000000000000E+0       0.00000000000000E+0
   BmDistLoadG               7      610       Y       1      1.76000000000000E+0
1.76000000000000E+0       0.00000000000000E+0       0.00000000000000E+0
0.00000000000000E+0       0.00000000000000E+0
   BmDistLoadG               7      611       Y       1      1.76000000000000E+0
```

1.76000000000000E+0 0.00000000000000E+0 0.00000000000000E+0
0.00000000000000E+0 0.00000000000000E+0
BmDistLoadG 7 612 Y 1 1.76000000000000E+0
1.76000000000000E+0 0.00000000000000E+0 0.00000000000000E+0
0.00000000000000E+0 0.00000000000000E+0
BmDistLoadG 7 613 Y 1 1.76000000000000E+0
1.76000000000000E+0 0.00000000000000E+0 0.00000000000000E+0
0.00000000000000E+0 0.00000000000000E+0
BmDistLoadG 7 614 Y 1 1.76000000000000E+0
1.76000000000000E+0 0.00000000000000E+0 0.00000000000000E+0
0.00000000000000E+0 0.00000000000000E+0
BmDistLoadG 7 649 Z 1 1.15500000000000E+0
1.15500000000000E+0 0.00000000000000E+0 0.00000000000000E+0
0.00000000000000E+0 0.00000000000000E+0
BmDistLoadG 7 650 Z 1 1.15500000000000E+0
1.15500000000000E+0 0.00000000000000E+0 0.00000000000000E+0
0.00000000000000E+0 0.00000000000000E+0
BmDistLoadG 7 651 Z 1 1.15500000000000E+0
1.15500000000000E+0 0.00000000000000E+0 0.00000000000000E+0
0.00000000000000E+0 0.00000000000000E+0
BmDistLoadG 7 652 Z 1 1.15500000000000E+0
1.15500000000000E+0 0.00000000000000E+0 0.00000000000000E+0
0.00000000000000E+0 0.00000000000000E+0
BmDistLoadG 7 653 Z 1 2.31000000000000E+0
2.31000000000000E+0 0.00000000000000E+0 0.00000000000000E+0
0.00000000000000E+0 0.00000000000000E+0
BmDistLoadG 7 654 Z 1 2.31000000000000E+0
2.31000000000000E+0 0.00000000000000E+0 0.00000000000000E+0
0.00000000000000E+0 0.00000000000000E+0
BmDistLoadG 7 655 Z 1 2.31000000000000E+0
2.31000000000000E+0 0.00000000000000E+0 0.00000000000000E+0
0.00000000000000E+0 0.00000000000000E+0
BmDistLoadG 7 656 Z 1 2.31000000000000E+0
2.31000000000000E+0 0.00000000000000E+0 0.00000000000000E+0
0.00000000000000E+0 0.00000000000000E+0
BmDistLoadG 7 657 Z 1 2.31000000000000E+0
2.31000000000000E+0 0.00000000000000E+0 0.00000000000000E+0
0.00000000000000E+0 0.00000000000000E+0
BmDistLoadG 7 658 Z 1 2.31000000000000E+0
2.31000000000000E+0 0.00000000000000E+0 0.00000000000000E+0
0.00000000000000E+0 0.00000000000000E+0
BmDistLoadG 7 659 Z 1 2.31000000000000E+0
2.31000000000000E+0 0.00000000000000E+0 0.00000000000000E+0
0.00000000000000E+0 0.00000000000000E+0
BmDistLoadG 7 660 Z 1 2.31000000000000E+0
2.31000000000000E+0 0.00000000000000E+0 0.00000000000000E+0
0.00000000000000E+0 0.00000000000000E+0
BmDistLoadG 7 661 Z 1 2.31000000000000E+0
2.31000000000000E+0 0.00000000000000E+0 0.00000000000000E+0
0.00000000000000E+0 0.00000000000000E+0
BmDistLoadG 7 662 Z 1 2.31000000000000E+0
2.31000000000000E+0 0.00000000000000E+0 0.00000000000000E+0
0.00000000000000E+0 0.00000000000000E+0
BmDistLoadG 7 663 Z 1 2.31000000000000E+0

```
2.31000000000000E+0      0.00000000000000E+0      0.00000000000000E+0
0.00000000000000E+0      0.00000000000000E+0
   BmDistLoadG              7     664      Z      1     2.31000000000000E+0
2.31000000000000E+0      0.00000000000000E+0      0.00000000000000E+0
0.00000000000000E+0      0.00000000000000E+0
   BmDistLoadG              7     665      Z      1     2.31000000000000E+0
2.31000000000000E+0      0.00000000000000E+0      0.00000000000000E+0
0.00000000000000E+0      0.00000000000000E+0
   BmDistLoadG              7     666      Z      1     2.31000000000000E+0
2.31000000000000E+0      0.00000000000000E+0      0.00000000000000E+0
0.00000000000000E+0      0.00000000000000E+0
   BmDistLoadG              7     667      Z      1     2.31000000000000E+0
2.31000000000000E+0      0.00000000000000E+0      0.00000000000000E+0
0.00000000000000E+0      0.00000000000000E+0
   BmDistLoadG              7     668      Z      1     2.31000000000000E+0
2.31000000000000E+0      0.00000000000000E+0      0.00000000000000E+0
0.00000000000000E+0      0.00000000000000E+0

/ ____________________________________________________________________________
/ BEAM GLOBAL DISTRIBUTED LOADS
/ Q02b - Carico Vento Y-
   BmDistLoadG              9      13      Z      1     1.15500000000000E+0
1.15500000000000E+0      0.00000000000000E+0      0.00000000000000E+0
0.00000000000000E+0      0.00000000000000E+0
   BmDistLoadG              9      14      Z      1     2.31000000000000E+0
2.31000000000000E+0      0.00000000000000E+0      0.00000000000000E+0
0.00000000000000E+0      0.00000000000000E+0
   BmDistLoadG              9      15      Z      1     2.31000000000000E+0
2.31000000000000E+0      0.00000000000000E+0      0.00000000000000E+0
0.00000000000000E+0      0.00000000000000E+0
   BmDistLoadG              9      16      Z      1     2.31000000000000E+0
2.31000000000000E+0      0.00000000000000E+0      0.00000000000000E+0
0.00000000000000E+0      0.00000000000000E+0
   BmDistLoadG              9      17      Z      1     2.31000000000000E+0
2.31000000000000E+0      0.00000000000000E+0      0.00000000000000E+0
0.00000000000000E+0      0.00000000000000E+0
   BmDistLoadG              9      18      Z      1     2.31000000000000E+0
2.31000000000000E+0      0.00000000000000E+0      0.00000000000000E+0
0.00000000000000E+0      0.00000000000000E+0
   BmDistLoadG              9      19      Z      1     2.31000000000000E+0
2.31000000000000E+0      0.00000000000000E+0      0.00000000000000E+0
0.00000000000000E+0      0.00000000000000E+0
   BmDistLoadG              9      20      Z      1     2.31000000000000E+0
2.31000000000000E+0      0.00000000000000E+0      0.00000000000000E+0
0.00000000000000E+0      0.00000000000000E+0
   BmDistLoadG              9      21      Z      1     2.31000000000000E+0
2.31000000000000E+0      0.00000000000000E+0      0.00000000000000E+0
0.00000000000000E+0      0.00000000000000E+0
   BmDistLoadG              9      22      Z      1     1.15500000000000E+0
1.15500000000000E+0      0.00000000000000E+0      0.00000000000000E+0
0.00000000000000E+0      0.00000000000000E+0
   BmDistLoadG              9      69      Y      1    -1.65000000000000E+0
-1.65000000000000E+0      0.00000000000000E+0      0.00000000000000E+0
0.00000000000000E+0      0.00000000000000E+0
```

```
   BmDistLoadG              9       70       Y       1    -1.65000000000000E+0
-1.65000000000000E+0      0.00000000000000E+0      0.00000000000000E+0
0.00000000000000E+0      0.00000000000000E+0
   BmDistLoadG              9       71       Y       1    -1.65000000000000E+0
-1.65000000000000E+0      0.00000000000000E+0      0.00000000000000E+0
0.00000000000000E+0      0.00000000000000E+0
   BmDistLoadG              9       72       Y       1    -1.65000000000000E+0
-1.65000000000000E+0      0.00000000000000E+0      0.00000000000000E+0
0.00000000000000E+0      0.00000000000000E+0
   BmDistLoadG              9       73       Y       1    -1.65000000000000E+0
-1.65000000000000E+0      0.00000000000000E+0      0.00000000000000E+0
0.00000000000000E+0      0.00000000000000E+0
   BmDistLoadG              9       74       Y       1    -3.30000000000000E+0
-3.30000000000000E+0      0.00000000000000E+0      0.00000000000000E+0
0.00000000000000E+0      0.00000000000000E+0
   BmDistLoadG              9       75       Y       1    -3.30000000000000E+0
-3.30000000000000E+0      0.00000000000000E+0      0.00000000000000E+0
0.00000000000000E+0      0.00000000000000E+0
   BmDistLoadG              9       76       Y       1    -3.30000000000000E+0
-3.30000000000000E+0      0.00000000000000E+0      0.00000000000000E+0
0.00000000000000E+0      0.00000000000000E+0
   BmDistLoadG              9       77       Y       1    -3.30000000000000E+0
-3.30000000000000E+0      0.00000000000000E+0      0.00000000000000E+0
0.00000000000000E+0      0.00000000000000E+0
   BmDistLoadG              9       78       Y       1    -3.30000000000000E+0
-3.30000000000000E+0      0.00000000000000E+0      0.00000000000000E+0
0.00000000000000E+0      0.00000000000000E+0
   BmDistLoadG              9       79       Y       1    -3.30000000000000E+0
-3.30000000000000E+0      0.00000000000000E+0      0.00000000000000E+0
0.00000000000000E+0      0.00000000000000E+0
   BmDistLoadG              9       80       Y       1    -3.30000000000000E+0
-3.30000000000000E+0      0.00000000000000E+0      0.00000000000000E+0
0.00000000000000E+0      0.00000000000000E+0
   BmDistLoadG              9       81       Y       1    -3.30000000000000E+0
-3.30000000000000E+0      0.00000000000000E+0      0.00000000000000E+0
0.00000000000000E+0      0.00000000000000E+0
   BmDistLoadG              9       82       Y       1    -3.30000000000000E+0
-3.30000000000000E+0      0.00000000000000E+0      0.00000000000000E+0
0.00000000000000E+0      0.00000000000000E+0
   BmDistLoadG              9       83       Y       1    -3.30000000000000E+0
-3.30000000000000E+0      0.00000000000000E+0      0.00000000000000E+0
0.00000000000000E+0      0.00000000000000E+0
   BmDistLoadG              9       84       Y       1    -3.30000000000000E+0
-3.30000000000000E+0      0.00000000000000E+0      0.00000000000000E+0
0.00000000000000E+0      0.00000000000000E+0
   BmDistLoadG              9       85       Y       1    -3.30000000000000E+0
-3.30000000000000E+0      0.00000000000000E+0      0.00000000000000E+0
0.00000000000000E+0      0.00000000000000E+0
   BmDistLoadG              9       86       Y       1    -3.30000000000000E+0
-3.30000000000000E+0      0.00000000000000E+0      0.00000000000000E+0
0.00000000000000E+0      0.00000000000000E+0
   BmDistLoadG              9       87       Y       1    -3.30000000000000E+0
-3.30000000000000E+0      0.00000000000000E+0      0.00000000000000E+0
0.00000000000000E+0      0.00000000000000E+0
```

```
   BmDistLoadG              9      88       Y      1    -3.30000000000000E+0
-3.30000000000000E+0      0.00000000000000E+0      0.00000000000000E+0
0.00000000000000E+0      0.00000000000000E+0
   BmDistLoadG              9      89       Y      1    -3.30000000000000E+0
-3.30000000000000E+0      0.00000000000000E+0      0.00000000000000E+0
0.00000000000000E+0      0.00000000000000E+0
   BmDistLoadG              9      90       Y      1    -3.30000000000000E+0
-3.30000000000000E+0      0.00000000000000E+0      0.00000000000000E+0
0.00000000000000E+0      0.00000000000000E+0
   BmDistLoadG              9      91       Y      1    -3.30000000000000E+0
-3.30000000000000E+0      0.00000000000000E+0      0.00000000000000E+0
0.00000000000000E+0      0.00000000000000E+0
   BmDistLoadG              9      92       Y      1    -3.30000000000000E+0
-3.30000000000000E+0      0.00000000000000E+0      0.00000000000000E+0
0.00000000000000E+0      0.00000000000000E+0
   BmDistLoadG              9      93       Y      1    -3.30000000000000E+0
-3.30000000000000E+0      0.00000000000000E+0      0.00000000000000E+0
0.00000000000000E+0      0.00000000000000E+0
   BmDistLoadG              9      94       Y      1    -3.30000000000000E+0
-3.30000000000000E+0      0.00000000000000E+0      0.00000000000000E+0
0.00000000000000E+0      0.00000000000000E+0
   BmDistLoadG              9      95       Y      1    -3.30000000000000E+0
-3.30000000000000E+0      0.00000000000000E+0      0.00000000000000E+0
0.00000000000000E+0      0.00000000000000E+0
   BmDistLoadG              9      96       Y      1    -3.30000000000000E+0
-3.30000000000000E+0      0.00000000000000E+0      0.00000000000000E+0
0.00000000000000E+0      0.00000000000000E+0
   BmDistLoadG              9      97       Y      1    -3.30000000000000E+0
-3.30000000000000E+0      0.00000000000000E+0      0.00000000000000E+0
0.00000000000000E+0      0.00000000000000E+0
   BmDistLoadG              9      98       Y      1    -3.30000000000000E+0
-3.30000000000000E+0      0.00000000000000E+0      0.00000000000000E+0
0.00000000000000E+0      0.00000000000000E+0
   BmDistLoadG              9      99       Y      1    -3.30000000000000E+0
-3.30000000000000E+0      0.00000000000000E+0      0.00000000000000E+0
0.00000000000000E+0      0.00000000000000E+0
   BmDistLoadG              9     100       Y      1    -3.30000000000000E+0
-3.30000000000000E+0      0.00000000000000E+0      0.00000000000000E+0
0.00000000000000E+0      0.00000000000000E+0
   BmDistLoadG              9     101       Y      1    -3.30000000000000E+0
-3.30000000000000E+0      0.00000000000000E+0      0.00000000000000E+0
0.00000000000000E+0      0.00000000000000E+0
   BmDistLoadG              9     102       Y      1    -3.30000000000000E+0
-3.30000000000000E+0      0.00000000000000E+0      0.00000000000000E+0
0.00000000000000E+0      0.00000000000000E+0
   BmDistLoadG              9     103       Y      1    -3.30000000000000E+0
-3.30000000000000E+0      0.00000000000000E+0      0.00000000000000E+0
0.00000000000000E+0      0.00000000000000E+0
   BmDistLoadG              9     104       Y      1    -3.30000000000000E+0
-3.30000000000000E+0      0.00000000000000E+0      0.00000000000000E+0
0.00000000000000E+0      0.00000000000000E+0
   BmDistLoadG              9     105       Y      1    -3.30000000000000E+0
-3.30000000000000E+0      0.00000000000000E+0      0.00000000000000E+0
0.00000000000000E+0      0.00000000000000E+0
```

```
   BmDistLoadG             9      106       Y       1     -3.30000000000000E+0
-3.30000000000000E+0       0.00000000000000E+0       0.00000000000000E+0
0.00000000000000E+0       0.00000000000000E+0
   BmDistLoadG             9      107       Y       1     -3.30000000000000E+0
-3.30000000000000E+0       0.00000000000000E+0       0.00000000000000E+0
0.00000000000000E+0       0.00000000000000E+0
   BmDistLoadG             9      108       Y       1     -3.30000000000000E+0
-3.30000000000000E+0       0.00000000000000E+0       0.00000000000000E+0
0.00000000000000E+0       0.00000000000000E+0
   BmDistLoadG             9      109       Y       1     -3.30000000000000E+0
-3.30000000000000E+0       0.00000000000000E+0       0.00000000000000E+0
0.00000000000000E+0       0.00000000000000E+0
   BmDistLoadG             9      110       Y       1     -3.30000000000000E+0
-3.30000000000000E+0       0.00000000000000E+0       0.00000000000000E+0
0.00000000000000E+0       0.00000000000000E+0
   BmDistLoadG             9      111       Y       1     -3.30000000000000E+0
-3.30000000000000E+0       0.00000000000000E+0       0.00000000000000E+0
0.00000000000000E+0       0.00000000000000E+0
   BmDistLoadG             9      112       Y       1     -3.30000000000000E+0
-3.30000000000000E+0       0.00000000000000E+0       0.00000000000000E+0
0.00000000000000E+0       0.00000000000000E+0
   BmDistLoadG             9      113       Y       1     -3.30000000000000E+0
-3.30000000000000E+0       0.00000000000000E+0       0.00000000000000E+0
0.00000000000000E+0       0.00000000000000E+0
   BmDistLoadG             9      114       Y       1     -1.65000000000000E+0
-1.65000000000000E+0       0.00000000000000E+0       0.00000000000000E+0
0.00000000000000E+0       0.00000000000000E+0
   BmDistLoadG             9      115       Y       1     -1.65000000000000E+0
-1.65000000000000E+0       0.00000000000000E+0       0.00000000000000E+0
0.00000000000000E+0       0.00000000000000E+0
   BmDistLoadG             9      116       Y       1     -1.65000000000000E+0
-1.65000000000000E+0       0.00000000000000E+0       0.00000000000000E+0
0.00000000000000E+0       0.00000000000000E+0
   BmDistLoadG             9      117       Y       1     -1.65000000000000E+0
-1.65000000000000E+0       0.00000000000000E+0       0.00000000000000E+0
0.00000000000000E+0       0.00000000000000E+0
   BmDistLoadG             9      118       Y       1     -1.65000000000000E+0
-1.65000000000000E+0       0.00000000000000E+0       0.00000000000000E+0
0.00000000000000E+0       0.00000000000000E+0
   BmDistLoadG             9      119       Y       1     -1.65000000000000E+0
-1.65000000000000E+0       0.00000000000000E+0       0.00000000000000E+0
0.00000000000000E+0       0.00000000000000E+0
   BmDistLoadG             9      120       Y       1     -1.65000000000000E+0
-1.65000000000000E+0       0.00000000000000E+0       0.00000000000000E+0
0.00000000000000E+0       0.00000000000000E+0
   BmDistLoadG             9      121       Y       1     -1.65000000000000E+0
-1.65000000000000E+0       0.00000000000000E+0       0.00000000000000E+0
0.00000000000000E+0       0.00000000000000E+0
   BmDistLoadG             9      122       Y       1     -1.65000000000000E+0
-1.65000000000000E+0       0.00000000000000E+0       0.00000000000000E+0
0.00000000000000E+0       0.00000000000000E+0
   BmDistLoadG             9      123       Y       1     -1.65000000000000E+0
-1.65000000000000E+0       0.00000000000000E+0       0.00000000000000E+0
0.00000000000000E+0       0.00000000000000E+0
```

```
   BmDistLoadG              9     124      Y      1    -3.30000000000000E+0
-3.30000000000000E+0      0.00000000000000E+0      0.00000000000000E+0
0.00000000000000E+0      0.00000000000000E+0
   BmDistLoadG              9     125      Y      1    -3.30000000000000E+0
-3.30000000000000E+0      0.00000000000000E+0      0.00000000000000E+0
0.00000000000000E+0      0.00000000000000E+0
   BmDistLoadG              9     126      Y      1    -3.30000000000000E+0
-3.30000000000000E+0      0.00000000000000E+0      0.00000000000000E+0
0.00000000000000E+0      0.00000000000000E+0
   BmDistLoadG              9     127      Y      1    -3.30000000000000E+0
-3.30000000000000E+0      0.00000000000000E+0      0.00000000000000E+0
0.00000000000000E+0      0.00000000000000E+0
   BmDistLoadG              9     128      Y      1    -3.30000000000000E+0
-3.30000000000000E+0      0.00000000000000E+0      0.00000000000000E+0
0.00000000000000E+0      0.00000000000000E+0
   BmDistLoadG              9     129      Y      1    -3.30000000000000E+0
-3.30000000000000E+0      0.00000000000000E+0      0.00000000000000E+0
0.00000000000000E+0      0.00000000000000E+0
   BmDistLoadG              9     130      Y      1    -3.30000000000000E+0
-3.30000000000000E+0      0.00000000000000E+0      0.00000000000000E+0
0.00000000000000E+0      0.00000000000000E+0
   BmDistLoadG              9     131      Y      1    -3.30000000000000E+0
-3.30000000000000E+0      0.00000000000000E+0      0.00000000000000E+0
0.00000000000000E+0      0.00000000000000E+0
   BmDistLoadG              9     132      Y      1    -3.30000000000000E+0
-3.30000000000000E+0      0.00000000000000E+0      0.00000000000000E+0
0.00000000000000E+0      0.00000000000000E+0
   BmDistLoadG              9     133      Y      1    -3.30000000000000E+0
-3.30000000000000E+0      0.00000000000000E+0      0.00000000000000E+0
0.00000000000000E+0      0.00000000000000E+0
   BmDistLoadG              9     134      Y      1    -3.30000000000000E+0
-3.30000000000000E+0      0.00000000000000E+0      0.00000000000000E+0
0.00000000000000E+0      0.00000000000000E+0
   BmDistLoadG              9     135      Y      1    -3.30000000000000E+0
-3.30000000000000E+0      0.00000000000000E+0      0.00000000000000E+0
0.00000000000000E+0      0.00000000000000E+0
   BmDistLoadG              9     136      Y      1    -3.30000000000000E+0
-3.30000000000000E+0      0.00000000000000E+0      0.00000000000000E+0
0.00000000000000E+0      0.00000000000000E+0
   BmDistLoadG              9     137      Y      1    -3.30000000000000E+0
-3.30000000000000E+0      0.00000000000000E+0      0.00000000000000E+0
0.00000000000000E+0      0.00000000000000E+0
   BmDistLoadG              9     138      Y      1    -3.30000000000000E+0
-3.30000000000000E+0      0.00000000000000E+0      0.00000000000000E+0
0.00000000000000E+0      0.00000000000000E+0
   BmDistLoadG              9     139      Y      1    -3.30000000000000E+0
-3.30000000000000E+0      0.00000000000000E+0      0.00000000000000E+0
0.00000000000000E+0      0.00000000000000E+0
   BmDistLoadG              9     140      Y      1    -3.30000000000000E+0
-3.30000000000000E+0      0.00000000000000E+0      0.00000000000000E+0
0.00000000000000E+0      0.00000000000000E+0
   BmDistLoadG              9     141      Y      1    -3.30000000000000E+0
-3.30000000000000E+0      0.00000000000000E+0      0.00000000000000E+0
0.00000000000000E+0      0.00000000000000E+0
```

```
   BmDistLoadG              9     142       Y       1    -3.30000000000000E+0
-3.30000000000000E+0      0.00000000000000E+0      0.00000000000000E+0
0.00000000000000E+0      0.00000000000000E+0
   BmDistLoadG              9     143       Y       1    -3.30000000000000E+0
-3.30000000000000E+0      0.00000000000000E+0      0.00000000000000E+0
0.00000000000000E+0      0.00000000000000E+0
   BmDistLoadG              9     144       Y       1    -3.30000000000000E+0
-3.30000000000000E+0      0.00000000000000E+0      0.00000000000000E+0
0.00000000000000E+0      0.00000000000000E+0
   BmDistLoadG              9     145       Y       1    -3.30000000000000E+0
-3.30000000000000E+0      0.00000000000000E+0      0.00000000000000E+0
0.00000000000000E+0      0.00000000000000E+0
   BmDistLoadG              9     146       Y       1    -3.30000000000000E+0
-3.30000000000000E+0      0.00000000000000E+0      0.00000000000000E+0
0.00000000000000E+0      0.00000000000000E+0
   BmDistLoadG              9     147       Y       1    -3.30000000000000E+0
-3.30000000000000E+0      0.00000000000000E+0      0.00000000000000E+0
0.00000000000000E+0      0.00000000000000E+0
   BmDistLoadG              9     148       Y       1    -3.30000000000000E+0
-3.30000000000000E+0      0.00000000000000E+0      0.00000000000000E+0
0.00000000000000E+0      0.00000000000000E+0
   BmDistLoadG              9     149       Y       1    -3.30000000000000E+0
-3.30000000000000E+0      0.00000000000000E+0      0.00000000000000E+0
0.00000000000000E+0      0.00000000000000E+0
   BmDistLoadG              9     150       Y       1    -3.30000000000000E+0
-3.30000000000000E+0      0.00000000000000E+0      0.00000000000000E+0
0.00000000000000E+0      0.00000000000000E+0
   BmDistLoadG              9     151       Y       1    -3.30000000000000E+0
-3.30000000000000E+0      0.00000000000000E+0      0.00000000000000E+0
0.00000000000000E+0      0.00000000000000E+0
   BmDistLoadG              9     152       Y       1    -3.30000000000000E+0
-3.30000000000000E+0      0.00000000000000E+0      0.00000000000000E+0
0.00000000000000E+0      0.00000000000000E+0
   BmDistLoadG              9     153       Y       1    -3.30000000000000E+0
-3.30000000000000E+0      0.00000000000000E+0      0.00000000000000E+0
0.00000000000000E+0      0.00000000000000E+0
   BmDistLoadG              9     154       Y       1    -3.30000000000000E+0
-3.30000000000000E+0      0.00000000000000E+0      0.00000000000000E+0
0.00000000000000E+0      0.00000000000000E+0
   BmDistLoadG              9     155       Y       1    -3.30000000000000E+0
-3.30000000000000E+0      0.00000000000000E+0      0.00000000000000E+0
0.00000000000000E+0      0.00000000000000E+0
   BmDistLoadG              9     156       Y       1    -3.30000000000000E+0
-3.30000000000000E+0      0.00000000000000E+0      0.00000000000000E+0
0.00000000000000E+0      0.00000000000000E+0
   BmDistLoadG              9     157       Y       1    -3.30000000000000E+0
-3.30000000000000E+0      0.00000000000000E+0      0.00000000000000E+0
0.00000000000000E+0      0.00000000000000E+0
   BmDistLoadG              9     158       Y       1    -3.30000000000000E+0
-3.30000000000000E+0      0.00000000000000E+0      0.00000000000000E+0
0.00000000000000E+0      0.00000000000000E+0
   BmDistLoadG              9     159       Y       1    -1.65000000000000E+0
-1.65000000000000E+0      0.00000000000000E+0      0.00000000000000E+0
0.00000000000000E+0      0.00000000000000E+0
```

```
   BmDistLoadG             9     160       Y       1    -1.65000000000000E+0
-1.65000000000000E+0     0.00000000000000E+0     0.00000000000000E+0
0.00000000000000E+0     0.00000000000000E+0
   BmDistLoadG             9     161       Y       1    -1.65000000000000E+0
-1.65000000000000E+0     0.00000000000000E+0     0.00000000000000E+0
0.00000000000000E+0     0.00000000000000E+0
   BmDistLoadG             9     162       Y       1    -1.65000000000000E+0
-1.65000000000000E+0     0.00000000000000E+0     0.00000000000000E+0
0.00000000000000E+0     0.00000000000000E+0
   BmDistLoadG             9     163       Y       1    -1.65000000000000E+0
-1.65000000000000E+0     0.00000000000000E+0     0.00000000000000E+0
0.00000000000000E+0     0.00000000000000E+0
   BmDistLoadG             9     164       Z       1     1.15500000000000E+0
1.15500000000000E+0     0.00000000000000E+0     0.00000000000000E+0
0.00000000000000E+0     0.00000000000000E+0
   BmDistLoadG             9     165       Z       1     1.15500000000000E+0
1.15500000000000E+0     0.00000000000000E+0     0.00000000000000E+0
0.00000000000000E+0     0.00000000000000E+0
   BmDistLoadG             9     166       Z       1     1.15500000000000E+0
1.15500000000000E+0     0.00000000000000E+0     0.00000000000000E+0
0.00000000000000E+0     0.00000000000000E+0
   BmDistLoadG             9     167       Z       1     1.15500000000000E+0
1.15500000000000E+0     0.00000000000000E+0     0.00000000000000E+0
0.00000000000000E+0     0.00000000000000E+0
   BmDistLoadG             9     168       Z       1     1.15500000000000E+0
1.15500000000000E+0     0.00000000000000E+0     0.00000000000000E+0
0.00000000000000E+0     0.00000000000000E+0
   BmDistLoadG             9     169       Z       1     1.15500000000000E+0
1.15500000000000E+0     0.00000000000000E+0     0.00000000000000E+0
0.00000000000000E+0     0.00000000000000E+0
   BmDistLoadG             9     170       Z       1     1.15500000000000E+0
1.15500000000000E+0     0.00000000000000E+0     0.00000000000000E+0
0.00000000000000E+0     0.00000000000000E+0
   BmDistLoadG             9     171       Z       1     1.15500000000000E+0
1.15500000000000E+0     0.00000000000000E+0     0.00000000000000E+0
0.00000000000000E+0     0.00000000000000E+0
   BmDistLoadG             9     172       Z       1     1.15500000000000E+0
1.15500000000000E+0     0.00000000000000E+0     0.00000000000000E+0
0.00000000000000E+0     0.00000000000000E+0
   BmDistLoadG             9     173       Z       1     1.15500000000000E+0
1.15500000000000E+0     0.00000000000000E+0     0.00000000000000E+0
0.00000000000000E+0     0.00000000000000E+0
   BmDistLoadG             9     174       Z       1     1.15500000000000E+0
1.15500000000000E+0     0.00000000000000E+0     0.00000000000000E+0
0.00000000000000E+0     0.00000000000000E+0
   BmDistLoadG             9     175       Z       1     1.15500000000000E+0
1.15500000000000E+0     0.00000000000000E+0     0.00000000000000E+0
0.00000000000000E+0     0.00000000000000E+0
   BmDistLoadG             9     176       Z       1     1.15500000000000E+0
1.15500000000000E+0     0.00000000000000E+0     0.00000000000000E+0
0.00000000000000E+0     0.00000000000000E+0
   BmDistLoadG             9     177       Z       1     1.15500000000000E+0
1.15500000000000E+0     0.00000000000000E+0     0.00000000000000E+0
0.00000000000000E+0     0.00000000000000E+0
```

```
   BmDistLoadG              9     178      Z      1     1.15500000000000E+0
1.15500000000000E+0      0.00000000000000E+0      0.00000000000000E+0
0.00000000000000E+0      0.00000000000000E+0
   BmDistLoadG              9     179      Z      1     1.15500000000000E+0
1.15500000000000E+0      0.00000000000000E+0      0.00000000000000E+0
0.00000000000000E+0      0.00000000000000E+0
   BmDistLoadG              9     180      Z      1     1.15500000000000E+0
1.15500000000000E+0      0.00000000000000E+0      0.00000000000000E+0
0.00000000000000E+0      0.00000000000000E+0
   BmDistLoadG              9     181      Z      1     1.15500000000000E+0
1.15500000000000E+0      0.00000000000000E+0      0.00000000000000E+0
0.00000000000000E+0      0.00000000000000E+0
   BmDistLoadG              9     182      Z      1     1.15500000000000E+0
1.15500000000000E+0      0.00000000000000E+0      0.00000000000000E+0
0.00000000000000E+0      0.00000000000000E+0
   BmDistLoadG              9     183      Z      1     1.15500000000000E+0
1.15500000000000E+0      0.00000000000000E+0      0.00000000000000E+0
0.00000000000000E+0      0.00000000000000E+0
   BmDistLoadG              9     184      Z      1     1.15500000000000E+0
1.15500000000000E+0      0.00000000000000E+0      0.00000000000000E+0
0.00000000000000E+0      0.00000000000000E+0
   BmDistLoadG              9     185      Z      1     1.15500000000000E+0
1.15500000000000E+0      0.00000000000000E+0      0.00000000000000E+0
0.00000000000000E+0      0.00000000000000E+0
   BmDistLoadG              9     186      Z      1     1.15500000000000E+0
1.15500000000000E+0      0.00000000000000E+0      0.00000000000000E+0
0.00000000000000E+0      0.00000000000000E+0
   BmDistLoadG              9     187      Z      1     1.15500000000000E+0
1.15500000000000E+0      0.00000000000000E+0      0.00000000000000E+0
0.00000000000000E+0      0.00000000000000E+0
   BmDistLoadG              9     188      Z      1     1.15500000000000E+0
1.15500000000000E+0      0.00000000000000E+0      0.00000000000000E+0
0.00000000000000E+0      0.00000000000000E+0
   BmDistLoadG              9     189      Z      1     1.15500000000000E+0
1.15500000000000E+0      0.00000000000000E+0      0.00000000000000E+0
0.00000000000000E+0      0.00000000000000E+0
   BmDistLoadG              9     190      Z      1     1.15500000000000E+0
1.15500000000000E+0      0.00000000000000E+0      0.00000000000000E+0
0.00000000000000E+0      0.00000000000000E+0
   BmDistLoadG              9     191      Z      1     1.15500000000000E+0
1.15500000000000E+0      0.00000000000000E+0      0.00000000000000E+0
0.00000000000000E+0      0.00000000000000E+0
   BmDistLoadG              9     192      Z      1     1.15500000000000E+0
1.15500000000000E+0      0.00000000000000E+0      0.00000000000000E+0
0.00000000000000E+0      0.00000000000000E+0
   BmDistLoadG              9     193      Z      1     1.15500000000000E+0
1.15500000000000E+0      0.00000000000000E+0      0.00000000000000E+0
0.00000000000000E+0      0.00000000000000E+0
   BmDistLoadG              9     194      Z      1     1.15500000000000E+0
1.15500000000000E+0      0.00000000000000E+0      0.00000000000000E+0
0.00000000000000E+0      0.00000000000000E+0
   BmDistLoadG              9     195      Z      1     1.15500000000000E+0
1.15500000000000E+0      0.00000000000000E+0      0.00000000000000E+0
0.00000000000000E+0      0.00000000000000E+0
```

```
   BmDistLoadG            9     196       Z        1      1.15500000000000E+0
1.15500000000000E+0     0.00000000000000E+0     0.00000000000000E+0
0.00000000000000E+0     0.00000000000000E+0
   BmDistLoadG            9     197       Z        1      1.15500000000000E+0
1.15500000000000E+0     0.00000000000000E+0     0.00000000000000E+0
0.00000000000000E+0     0.00000000000000E+0
   BmDistLoadG            9     198       Z        1      1.15500000000000E+0
1.15500000000000E+0     0.00000000000000E+0     0.00000000000000E+0
0.00000000000000E+0     0.00000000000000E+0
   BmDistLoadG            9     199       Z        1      1.15500000000000E+0
1.15500000000000E+0     0.00000000000000E+0     0.00000000000000E+0
0.00000000000000E+0     0.00000000000000E+0
   BmDistLoadG            9     200       Z        1      1.15500000000000E+0
1.15500000000000E+0     0.00000000000000E+0     0.00000000000000E+0
0.00000000000000E+0     0.00000000000000E+0
   BmDistLoadG            9     201       Z        1      1.15500000000000E+0
1.15500000000000E+0     0.00000000000000E+0     0.00000000000000E+0
0.00000000000000E+0     0.00000000000000E+0
   BmDistLoadG            9     202       Z        1      1.15500000000000E+0
1.15500000000000E+0     0.00000000000000E+0     0.00000000000000E+0
0.00000000000000E+0     0.00000000000000E+0
   BmDistLoadG            9     203       Z        1      1.15500000000000E+0
1.15500000000000E+0     0.00000000000000E+0     0.00000000000000E+0
0.00000000000000E+0     0.00000000000000E+0
   BmDistLoadG            9     204       Z        1      1.15500000000000E+0
1.15500000000000E+0     0.00000000000000E+0     0.00000000000000E+0
0.00000000000000E+0     0.00000000000000E+0
   BmDistLoadG            9     205       Z        1      1.15500000000000E+0
1.15500000000000E+0     0.00000000000000E+0     0.00000000000000E+0
0.00000000000000E+0     0.00000000000000E+0
   BmDistLoadG            9     206       Z        1      1.15500000000000E+0
1.15500000000000E+0     0.00000000000000E+0     0.00000000000000E+0
0.00000000000000E+0     0.00000000000000E+0
   BmDistLoadG            9     207       Z        1      1.15500000000000E+0
1.15500000000000E+0     0.00000000000000E+0     0.00000000000000E+0
0.00000000000000E+0     0.00000000000000E+0
   BmDistLoadG            9     208       Z        1      1.15500000000000E+0
1.15500000000000E+0     0.00000000000000E+0     0.00000000000000E+0
0.00000000000000E+0     0.00000000000000E+0
   BmDistLoadG            9     209       Z        1      1.15500000000000E+0
1.15500000000000E+0     0.00000000000000E+0     0.00000000000000E+0
0.00000000000000E+0     0.00000000000000E+0
   BmDistLoadG            9     210       Z        1      1.15500000000000E+0
1.15500000000000E+0     0.00000000000000E+0     0.00000000000000E+0
0.00000000000000E+0     0.00000000000000E+0
   BmDistLoadG            9     211       Z        1      1.15500000000000E+0
1.15500000000000E+0     0.00000000000000E+0     0.00000000000000E+0
0.00000000000000E+0     0.00000000000000E+0
   BmDistLoadG            9     212       Z        1      1.15500000000000E+0
1.15500000000000E+0     0.00000000000000E+0     0.00000000000000E+0
0.00000000000000E+0     0.00000000000000E+0
   BmDistLoadG            9     213       Z        1      1.15500000000000E+0
1.15500000000000E+0     0.00000000000000E+0     0.00000000000000E+0
0.00000000000000E+0     0.00000000000000E+0
```

```
   BmDistLoadG            9     214       Z       1     1.15500000000000E+0
1.15500000000000E+0     0.00000000000000E+0     0.00000000000000E+0
0.00000000000000E+0     0.00000000000000E+0
   BmDistLoadG            9     215       Z       1     1.15500000000000E+0
1.15500000000000E+0     0.00000000000000E+0     0.00000000000000E+0
0.00000000000000E+0     0.00000000000000E+0
   BmDistLoadG            9     216       Z       1     1.15500000000000E+0
1.15500000000000E+0     0.00000000000000E+0     0.00000000000000E+0
0.00000000000000E+0     0.00000000000000E+0
   BmDistLoadG            9     217       Z       1     1.15500000000000E+0
1.15500000000000E+0     0.00000000000000E+0     0.00000000000000E+0
0.00000000000000E+0     0.00000000000000E+0
   BmDistLoadG            9     218       Z       1     2.31000000000000E+0
2.31000000000000E+0     0.00000000000000E+0     0.00000000000000E+0
0.00000000000000E+0     0.00000000000000E+0
   BmDistLoadG            9     219       Z       1     2.31000000000000E+0
2.31000000000000E+0     0.00000000000000E+0     0.00000000000000E+0
0.00000000000000E+0     0.00000000000000E+0
   BmDistLoadG            9     220       Z       1     2.31000000000000E+0
2.31000000000000E+0     0.00000000000000E+0     0.00000000000000E+0
0.00000000000000E+0     0.00000000000000E+0
   BmDistLoadG            9     221       Z       1     2.31000000000000E+0
2.31000000000000E+0     0.00000000000000E+0     0.00000000000000E+0
0.00000000000000E+0     0.00000000000000E+0
   BmDistLoadG            9     222       Z       1     2.31000000000000E+0
2.31000000000000E+0     0.00000000000000E+0     0.00000000000000E+0
0.00000000000000E+0     0.00000000000000E+0
   BmDistLoadG            9     223       Z       1     2.31000000000000E+0
2.31000000000000E+0     0.00000000000000E+0     0.00000000000000E+0
0.00000000000000E+0     0.00000000000000E+0
   BmDistLoadG            9     224       Z       1     2.31000000000000E+0
2.31000000000000E+0     0.00000000000000E+0     0.00000000000000E+0
0.00000000000000E+0     0.00000000000000E+0
   BmDistLoadG            9     225       Z       1     2.31000000000000E+0
2.31000000000000E+0     0.00000000000000E+0     0.00000000000000E+0
0.00000000000000E+0     0.00000000000000E+0
   BmDistLoadG            9     226       Z       1     2.31000000000000E+0
2.31000000000000E+0     0.00000000000000E+0     0.00000000000000E+0
0.00000000000000E+0     0.00000000000000E+0
   BmDistLoadG            9     227       Z       1     2.31000000000000E+0
2.31000000000000E+0     0.00000000000000E+0     0.00000000000000E+0
0.00000000000000E+0     0.00000000000000E+0
   BmDistLoadG            9     228       Z       1     2.31000000000000E+0
2.31000000000000E+0     0.00000000000000E+0     0.00000000000000E+0
0.00000000000000E+0     0.00000000000000E+0
   BmDistLoadG            9     229       Z       1     2.31000000000000E+0
2.31000000000000E+0     0.00000000000000E+0     0.00000000000000E+0
0.00000000000000E+0     0.00000000000000E+0
   BmDistLoadG            9     230       Z       1     2.31000000000000E+0
2.31000000000000E+0     0.00000000000000E+0     0.00000000000000E+0
0.00000000000000E+0     0.00000000000000E+0
   BmDistLoadG            9     231       Z       1     2.31000000000000E+0
2.31000000000000E+0     0.00000000000000E+0     0.00000000000000E+0
0.00000000000000E+0     0.00000000000000E+0
```

```
   BmDistLoadG               9      232      Z       1     2.31000000000000E+0
2.31000000000000E+0       0.00000000000000E+0        0.00000000000000E+0
0.00000000000000E+0       0.00000000000000E+0
   BmDistLoadG               9      233      Z       1     2.31000000000000E+0
2.31000000000000E+0       0.00000000000000E+0        0.00000000000000E+0
0.00000000000000E+0       0.00000000000000E+0
   BmDistLoadG               9      234      Z       1     2.31000000000000E+0
2.31000000000000E+0       0.00000000000000E+0        0.00000000000000E+0
0.00000000000000E+0       0.00000000000000E+0
   BmDistLoadG               9      235      Z       1     2.31000000000000E+0
2.31000000000000E+0       0.00000000000000E+0        0.00000000000000E+0
0.00000000000000E+0       0.00000000000000E+0
   BmDistLoadG               9      236      Z       1     2.31000000000000E+0
2.31000000000000E+0       0.00000000000000E+0        0.00000000000000E+0
0.00000000000000E+0       0.00000000000000E+0
   BmDistLoadG               9      237      Z       1     2.31000000000000E+0
2.31000000000000E+0       0.00000000000000E+0        0.00000000000000E+0
0.00000000000000E+0       0.00000000000000E+0
   BmDistLoadG               9      238      Z       1     2.31000000000000E+0
2.31000000000000E+0       0.00000000000000E+0        0.00000000000000E+0
0.00000000000000E+0       0.00000000000000E+0
   BmDistLoadG               9      239      Z       1     2.31000000000000E+0
2.31000000000000E+0       0.00000000000000E+0        0.00000000000000E+0
0.00000000000000E+0       0.00000000000000E+0
   BmDistLoadG               9      240      Z       1     2.31000000000000E+0
2.31000000000000E+0       0.00000000000000E+0        0.00000000000000E+0
0.00000000000000E+0       0.00000000000000E+0
   BmDistLoadG               9      241      Z       1     2.31000000000000E+0
2.31000000000000E+0       0.00000000000000E+0        0.00000000000000E+0
0.00000000000000E+0       0.00000000000000E+0
   BmDistLoadG               9      242      Z       1     2.31000000000000E+0
2.31000000000000E+0       0.00000000000000E+0        0.00000000000000E+0
0.00000000000000E+0       0.00000000000000E+0
   BmDistLoadG               9      243      Z       1     2.31000000000000E+0
2.31000000000000E+0       0.00000000000000E+0        0.00000000000000E+0
0.00000000000000E+0       0.00000000000000E+0
   BmDistLoadG               9      244      Z       1     2.31000000000000E+0
2.31000000000000E+0       0.00000000000000E+0        0.00000000000000E+0
0.00000000000000E+0       0.00000000000000E+0
   BmDistLoadG               9      245      Z       1     2.31000000000000E+0
2.31000000000000E+0       0.00000000000000E+0        0.00000000000000E+0
0.00000000000000E+0       0.00000000000000E+0
   BmDistLoadG               9      246      Z       1     2.31000000000000E+0
2.31000000000000E+0       0.00000000000000E+0        0.00000000000000E+0
0.00000000000000E+0       0.00000000000000E+0
   BmDistLoadG               9      247      Z       1     2.31000000000000E+0
2.31000000000000E+0       0.00000000000000E+0        0.00000000000000E+0
0.00000000000000E+0       0.00000000000000E+0
   BmDistLoadG               9      248      Z       1     2.31000000000000E+0
2.31000000000000E+0       0.00000000000000E+0        0.00000000000000E+0
0.00000000000000E+0       0.00000000000000E+0
   BmDistLoadG               9      249      Z       1     2.31000000000000E+0
2.31000000000000E+0       0.00000000000000E+0        0.00000000000000E+0
0.00000000000000E+0       0.00000000000000E+0
```

```
   BmDistLoadG              9      250       Z        1      2.31000000000000E+0
2.31000000000000E+0      0.00000000000000E+0      0.00000000000000E+0
0.00000000000000E+0      0.00000000000000E+0
   BmDistLoadG              9      251       Z        1      2.31000000000000E+0
2.31000000000000E+0      0.00000000000000E+0      0.00000000000000E+0
0.00000000000000E+0      0.00000000000000E+0
   BmDistLoadG              9      252       Z        1      2.31000000000000E+0
2.31000000000000E+0      0.00000000000000E+0      0.00000000000000E+0
0.00000000000000E+0      0.00000000000000E+0
   BmDistLoadG              9      253       Z        1      2.31000000000000E+0
2.31000000000000E+0      0.00000000000000E+0      0.00000000000000E+0
0.00000000000000E+0      0.00000000000000E+0
   BmDistLoadG              9      254       Z        1      2.31000000000000E+0
2.31000000000000E+0      0.00000000000000E+0      0.00000000000000E+0
0.00000000000000E+0      0.00000000000000E+0
   BmDistLoadG              9      255       Z        1      2.31000000000000E+0
2.31000000000000E+0      0.00000000000000E+0      0.00000000000000E+0
0.00000000000000E+0      0.00000000000000E+0
   BmDistLoadG              9      256       Z        1      2.31000000000000E+0
2.31000000000000E+0      0.00000000000000E+0      0.00000000000000E+0
0.00000000000000E+0      0.00000000000000E+0
   BmDistLoadG              9      257       Z        1      2.31000000000000E+0
2.31000000000000E+0      0.00000000000000E+0      0.00000000000000E+0
0.00000000000000E+0      0.00000000000000E+0
   BmDistLoadG              9      258       Z        1      2.31000000000000E+0
2.31000000000000E+0      0.00000000000000E+0      0.00000000000000E+0
0.00000000000000E+0      0.00000000000000E+0
   BmDistLoadG              9      259       Z        1      2.31000000000000E+0
2.31000000000000E+0      0.00000000000000E+0      0.00000000000000E+0
0.00000000000000E+0      0.00000000000000E+0
   BmDistLoadG              9      260       Z        1      2.31000000000000E+0
2.31000000000000E+0      0.00000000000000E+0      0.00000000000000E+0
0.00000000000000E+0      0.00000000000000E+0
   BmDistLoadG              9      261       Z        1      2.31000000000000E+0
2.31000000000000E+0      0.00000000000000E+0      0.00000000000000E+0
0.00000000000000E+0      0.00000000000000E+0
   BmDistLoadG              9      262       Z        1      2.31000000000000E+0
2.31000000000000E+0      0.00000000000000E+0      0.00000000000000E+0
0.00000000000000E+0      0.00000000000000E+0
   BmDistLoadG              9      263       Z        1      2.31000000000000E+0
2.31000000000000E+0      0.00000000000000E+0      0.00000000000000E+0
0.00000000000000E+0      0.00000000000000E+0
   BmDistLoadG              9      264       Z        1      2.31000000000000E+0
2.31000000000000E+0      0.00000000000000E+0      0.00000000000000E+0
0.00000000000000E+0      0.00000000000000E+0
   BmDistLoadG              9      265       Z        1      2.31000000000000E+0
2.31000000000000E+0      0.00000000000000E+0      0.00000000000000E+0
0.00000000000000E+0      0.00000000000000E+0
   BmDistLoadG              9      266       Z        1      2.31000000000000E+0
2.31000000000000E+0      0.00000000000000E+0      0.00000000000000E+0
0.00000000000000E+0      0.00000000000000E+0
   BmDistLoadG              9      267       Z        1      2.31000000000000E+0
2.31000000000000E+0      0.00000000000000E+0      0.00000000000000E+0
0.00000000000000E+0      0.00000000000000E+0
```

```
   BmDistLoadG              9     268      Z      1     2.31000000000000E+0
2.31000000000000E+0      0.00000000000000E+0      0.00000000000000E+0
0.00000000000000E+0      0.00000000000000E+0
   BmDistLoadG              9     269      Z      1     2.31000000000000E+0
2.31000000000000E+0      0.00000000000000E+0      0.00000000000000E+0
0.00000000000000E+0      0.00000000000000E+0
   BmDistLoadG              9     270      Z      1     2.31000000000000E+0
2.31000000000000E+0      0.00000000000000E+0      0.00000000000000E+0
0.00000000000000E+0      0.00000000000000E+0
   BmDistLoadG              9     271      Z      1     2.31000000000000E+0
2.31000000000000E+0      0.00000000000000E+0      0.00000000000000E+0
0.00000000000000E+0      0.00000000000000E+0
   BmDistLoadG              9     272      Z      1     2.31000000000000E+0
2.31000000000000E+0      0.00000000000000E+0      0.00000000000000E+0
0.00000000000000E+0      0.00000000000000E+0
   BmDistLoadG              9     273      Z      1     2.31000000000000E+0
2.31000000000000E+0      0.00000000000000E+0      0.00000000000000E+0
0.00000000000000E+0      0.00000000000000E+0
   BmDistLoadG              9     274      Z      1     2.31000000000000E+0
2.31000000000000E+0      0.00000000000000E+0      0.00000000000000E+0
0.00000000000000E+0      0.00000000000000E+0
   BmDistLoadG              9     275      Z      1     2.31000000000000E+0
2.31000000000000E+0      0.00000000000000E+0      0.00000000000000E+0
0.00000000000000E+0      0.00000000000000E+0
   BmDistLoadG              9     276      Z      1     2.31000000000000E+0
2.31000000000000E+0      0.00000000000000E+0      0.00000000000000E+0
0.00000000000000E+0      0.00000000000000E+0
   BmDistLoadG              9     277      Z      1     2.31000000000000E+0
2.31000000000000E+0      0.00000000000000E+0      0.00000000000000E+0
0.00000000000000E+0      0.00000000000000E+0
   BmDistLoadG              9     278      Z      1     2.31000000000000E+0
2.31000000000000E+0      0.00000000000000E+0      0.00000000000000E+0
0.00000000000000E+0      0.00000000000000E+0
   BmDistLoadG              9     279      Z      1     2.31000000000000E+0
2.31000000000000E+0      0.00000000000000E+0      0.00000000000000E+0
0.00000000000000E+0      0.00000000000000E+0
   BmDistLoadG              9     280      Z      1     2.31000000000000E+0
2.31000000000000E+0      0.00000000000000E+0      0.00000000000000E+0
0.00000000000000E+0      0.00000000000000E+0
   BmDistLoadG              9     281      Z      1     2.31000000000000E+0
2.31000000000000E+0      0.00000000000000E+0      0.00000000000000E+0
0.00000000000000E+0      0.00000000000000E+0
   BmDistLoadG              9     282      Z      1     2.31000000000000E+0
2.31000000000000E+0      0.00000000000000E+0      0.00000000000000E+0
0.00000000000000E+0      0.00000000000000E+0
   BmDistLoadG              9     283      Z      1     2.31000000000000E+0
2.31000000000000E+0      0.00000000000000E+0      0.00000000000000E+0
0.00000000000000E+0      0.00000000000000E+0
   BmDistLoadG              9     284      Z      1     2.31000000000000E+0
2.31000000000000E+0      0.00000000000000E+0      0.00000000000000E+0
0.00000000000000E+0      0.00000000000000E+0
   BmDistLoadG              9     285      Z      1     2.31000000000000E+0
2.31000000000000E+0      0.00000000000000E+0      0.00000000000000E+0
0.00000000000000E+0      0.00000000000000E+0
```

```
   BmDistLoadG              9     286      Z      1     2.31000000000000E+0
2.31000000000000E+0      0.00000000000000E+0      0.00000000000000E+0
0.00000000000000E+0      0.00000000000000E+0
   BmDistLoadG              9     287      Z      1     2.31000000000000E+0
2.31000000000000E+0      0.00000000000000E+0      0.00000000000000E+0
0.00000000000000E+0      0.00000000000000E+0
   BmDistLoadG              9     288      Z      1     2.31000000000000E+0
2.31000000000000E+0      0.00000000000000E+0      0.00000000000000E+0
0.00000000000000E+0      0.00000000000000E+0
   BmDistLoadG              9     289      Z      1     2.31000000000000E+0
2.31000000000000E+0      0.00000000000000E+0      0.00000000000000E+0
0.00000000000000E+0      0.00000000000000E+0
   BmDistLoadG              9     290      Z      1     2.31000000000000E+0
2.31000000000000E+0      0.00000000000000E+0      0.00000000000000E+0
0.00000000000000E+0      0.00000000000000E+0
   BmDistLoadG              9     291      Z      1     2.31000000000000E+0
2.31000000000000E+0      0.00000000000000E+0      0.00000000000000E+0
0.00000000000000E+0      0.00000000000000E+0
   BmDistLoadG              9     292      Z      1     2.31000000000000E+0
2.31000000000000E+0      0.00000000000000E+0      0.00000000000000E+0
0.00000000000000E+0      0.00000000000000E+0
   BmDistLoadG              9     293      Z      1     2.31000000000000E+0
2.31000000000000E+0      0.00000000000000E+0      0.00000000000000E+0
0.00000000000000E+0      0.00000000000000E+0
   BmDistLoadG              9     294      Z      1     2.31000000000000E+0
2.31000000000000E+0      0.00000000000000E+0      0.00000000000000E+0
0.00000000000000E+0      0.00000000000000E+0
   BmDistLoadG              9     295      Z      1     2.31000000000000E+0
2.31000000000000E+0      0.00000000000000E+0      0.00000000000000E+0
0.00000000000000E+0      0.00000000000000E+0
   BmDistLoadG              9     296      Z      1     2.31000000000000E+0
2.31000000000000E+0      0.00000000000000E+0      0.00000000000000E+0
0.00000000000000E+0      0.00000000000000E+0
   BmDistLoadG              9     297      Z      1     2.31000000000000E+0
2.31000000000000E+0      0.00000000000000E+0      0.00000000000000E+0
0.00000000000000E+0      0.00000000000000E+0
   BmDistLoadG              9     298      Z      1     2.31000000000000E+0
2.31000000000000E+0      0.00000000000000E+0      0.00000000000000E+0
0.00000000000000E+0      0.00000000000000E+0
   BmDistLoadG              9     299      Z      1     2.31000000000000E+0
2.31000000000000E+0      0.00000000000000E+0      0.00000000000000E+0
0.00000000000000E+0      0.00000000000000E+0
   BmDistLoadG              9     300      Z      1     2.31000000000000E+0
2.31000000000000E+0      0.00000000000000E+0      0.00000000000000E+0
0.00000000000000E+0      0.00000000000000E+0
   BmDistLoadG              9     301      Z      1     2.31000000000000E+0
2.31000000000000E+0      0.00000000000000E+0      0.00000000000000E+0
0.00000000000000E+0      0.00000000000000E+0
   BmDistLoadG              9     302      Z      1     2.31000000000000E+0
2.31000000000000E+0      0.00000000000000E+0      0.00000000000000E+0
0.00000000000000E+0      0.00000000000000E+0
   BmDistLoadG              9     303      Z      1     2.31000000000000E+0
2.31000000000000E+0      0.00000000000000E+0      0.00000000000000E+0
0.00000000000000E+0      0.00000000000000E+0
```

```
   BmDistLoadG              9     304      Z      1     2.31000000000000E+0
2.31000000000000E+0      0.00000000000000E+0      0.00000000000000E+0
0.00000000000000E+0      0.00000000000000E+0
   BmDistLoadG              9     305      Z      1     2.31000000000000E+0
2.31000000000000E+0      0.00000000000000E+0      0.00000000000000E+0
0.00000000000000E+0      0.00000000000000E+0
   BmDistLoadG              9     306      Z      1     2.31000000000000E+0
2.31000000000000E+0      0.00000000000000E+0      0.00000000000000E+0
0.00000000000000E+0      0.00000000000000E+0
   BmDistLoadG              9     307      Z      1     2.31000000000000E+0
2.31000000000000E+0      0.00000000000000E+0      0.00000000000000E+0
0.00000000000000E+0      0.00000000000000E+0
   BmDistLoadG              9     308      Z      1     2.31000000000000E+0
2.31000000000000E+0      0.00000000000000E+0      0.00000000000000E+0
0.00000000000000E+0      0.00000000000000E+0
   BmDistLoadG              9     309      Z      1     2.31000000000000E+0
2.31000000000000E+0      0.00000000000000E+0      0.00000000000000E+0
0.00000000000000E+0      0.00000000000000E+0
   BmDistLoadG              9     310      Z      1     2.31000000000000E+0
2.31000000000000E+0      0.00000000000000E+0      0.00000000000000E+0
0.00000000000000E+0      0.00000000000000E+0
   BmDistLoadG              9     311      Z      1     2.31000000000000E+0
2.31000000000000E+0      0.00000000000000E+0      0.00000000000000E+0
0.00000000000000E+0      0.00000000000000E+0
   BmDistLoadG              9     312      Z      1     2.31000000000000E+0
2.31000000000000E+0      0.00000000000000E+0      0.00000000000000E+0
0.00000000000000E+0      0.00000000000000E+0
   BmDistLoadG              9     313      Z      1     2.31000000000000E+0
2.31000000000000E+0      0.00000000000000E+0      0.00000000000000E+0
0.00000000000000E+0      0.00000000000000E+0
   BmDistLoadG              9     314      Z      1     2.31000000000000E+0
2.31000000000000E+0      0.00000000000000E+0      0.00000000000000E+0
0.00000000000000E+0      0.00000000000000E+0
   BmDistLoadG              9     315      Z      1     2.31000000000000E+0
2.31000000000000E+0      0.00000000000000E+0      0.00000000000000E+0
0.00000000000000E+0      0.00000000000000E+0
   BmDistLoadG              9     316      Z      1     2.31000000000000E+0
2.31000000000000E+0      0.00000000000000E+0      0.00000000000000E+0
0.00000000000000E+0      0.00000000000000E+0
   BmDistLoadG              9     317      Z      1     2.31000000000000E+0
2.31000000000000E+0      0.00000000000000E+0      0.00000000000000E+0
0.00000000000000E+0      0.00000000000000E+0
   BmDistLoadG              9     318      Z      1     2.31000000000000E+0
2.31000000000000E+0      0.00000000000000E+0      0.00000000000000E+0
0.00000000000000E+0      0.00000000000000E+0
   BmDistLoadG              9     319      Z      1     2.31000000000000E+0
2.31000000000000E+0      0.00000000000000E+0      0.00000000000000E+0
0.00000000000000E+0      0.00000000000000E+0
   BmDistLoadG              9     320      Z      1     2.31000000000000E+0
2.31000000000000E+0      0.00000000000000E+0      0.00000000000000E+0
0.00000000000000E+0      0.00000000000000E+0
   BmDistLoadG              9     321      Z      1     2.31000000000000E+0
2.31000000000000E+0      0.00000000000000E+0      0.00000000000000E+0
0.00000000000000E+0      0.00000000000000E+0
```

```
   BmDistLoadG             9      322       Z        1      2.31000000000000E+0
2.31000000000000E+0     0.00000000000000E+0     0.00000000000000E+0
0.00000000000000E+0     0.00000000000000E+0
   BmDistLoadG             9      323       Z        1      2.31000000000000E+0
2.31000000000000E+0     0.00000000000000E+0     0.00000000000000E+0
0.00000000000000E+0     0.00000000000000E+0
   BmDistLoadG             9      324       Z        1      2.31000000000000E+0
2.31000000000000E+0     0.00000000000000E+0     0.00000000000000E+0
0.00000000000000E+0     0.00000000000000E+0
   BmDistLoadG             9      325       Z        1      2.31000000000000E+0
2.31000000000000E+0     0.00000000000000E+0     0.00000000000000E+0
0.00000000000000E+0     0.00000000000000E+0
   BmDistLoadG             9      326       Z        1      2.31000000000000E+0
2.31000000000000E+0     0.00000000000000E+0     0.00000000000000E+0
0.00000000000000E+0     0.00000000000000E+0
   BmDistLoadG             9      327       Z        1      2.31000000000000E+0
2.31000000000000E+0     0.00000000000000E+0     0.00000000000000E+0
0.00000000000000E+0     0.00000000000000E+0
   BmDistLoadG             9      328       Z        1      2.31000000000000E+0
2.31000000000000E+0     0.00000000000000E+0     0.00000000000000E+0
0.00000000000000E+0     0.00000000000000E+0
   BmDistLoadG             9      329       Z        1      2.31000000000000E+0
2.31000000000000E+0     0.00000000000000E+0     0.00000000000000E+0
0.00000000000000E+0     0.00000000000000E+0
   BmDistLoadG             9      330       Z        1      2.31000000000000E+0
2.31000000000000E+0     0.00000000000000E+0     0.00000000000000E+0
0.00000000000000E+0     0.00000000000000E+0
   BmDistLoadG             9      331       Z        1      2.31000000000000E+0
2.31000000000000E+0     0.00000000000000E+0     0.00000000000000E+0
0.00000000000000E+0     0.00000000000000E+0
   BmDistLoadG             9      332       Z        1      2.31000000000000E+0
2.31000000000000E+0     0.00000000000000E+0     0.00000000000000E+0
0.00000000000000E+0     0.00000000000000E+0
   BmDistLoadG             9      333       Z        1      2.31000000000000E+0
2.31000000000000E+0     0.00000000000000E+0     0.00000000000000E+0
0.00000000000000E+0     0.00000000000000E+0
   BmDistLoadG             9      334       Z        1      2.31000000000000E+0
2.31000000000000E+0     0.00000000000000E+0     0.00000000000000E+0
0.00000000000000E+0     0.00000000000000E+0
   BmDistLoadG             9      335       Z        1      2.31000000000000E+0
2.31000000000000E+0     0.00000000000000E+0     0.00000000000000E+0
0.00000000000000E+0     0.00000000000000E+0
   BmDistLoadG             9      336       Z        1      2.31000000000000E+0
2.31000000000000E+0     0.00000000000000E+0     0.00000000000000E+0
0.00000000000000E+0     0.00000000000000E+0
   BmDistLoadG             9      337       Z        1      2.31000000000000E+0
2.31000000000000E+0     0.00000000000000E+0     0.00000000000000E+0
0.00000000000000E+0     0.00000000000000E+0
   BmDistLoadG             9      338       Z        1      2.31000000000000E+0
2.31000000000000E+0     0.00000000000000E+0     0.00000000000000E+0
0.00000000000000E+0     0.00000000000000E+0
   BmDistLoadG             9      339       Z        1      2.31000000000000E+0
2.31000000000000E+0     0.00000000000000E+0     0.00000000000000E+0
0.00000000000000E+0     0.00000000000000E+0
```

```
   BmDistLoadG            9     340       Z        1      2.31000000000000E+0
2.31000000000000E+0     0.00000000000000E+0     0.00000000000000E+0
0.00000000000000E+0     0.00000000000000E+0
   BmDistLoadG            9     341       Z        1      2.31000000000000E+0
2.31000000000000E+0     0.00000000000000E+0     0.00000000000000E+0
0.00000000000000E+0     0.00000000000000E+0
   BmDistLoadG            9     342       Z        1      2.31000000000000E+0
2.31000000000000E+0     0.00000000000000E+0     0.00000000000000E+0
0.00000000000000E+0     0.00000000000000E+0
   BmDistLoadG            9     343       Z        1      2.31000000000000E+0
2.31000000000000E+0     0.00000000000000E+0     0.00000000000000E+0
0.00000000000000E+0     0.00000000000000E+0
   BmDistLoadG            9     344       Z        1      2.31000000000000E+0
2.31000000000000E+0     0.00000000000000E+0     0.00000000000000E+0
0.00000000000000E+0     0.00000000000000E+0
   BmDistLoadG            9     345       Z        1      2.31000000000000E+0
2.31000000000000E+0     0.00000000000000E+0     0.00000000000000E+0
0.00000000000000E+0     0.00000000000000E+0
   BmDistLoadG            9     346       Z        1      2.31000000000000E+0
2.31000000000000E+0     0.00000000000000E+0     0.00000000000000E+0
0.00000000000000E+0     0.00000000000000E+0
   BmDistLoadG            9     347       Z        1      2.31000000000000E+0
2.31000000000000E+0     0.00000000000000E+0     0.00000000000000E+0
0.00000000000000E+0     0.00000000000000E+0
   BmDistLoadG            9     348       Z        1      2.31000000000000E+0
2.31000000000000E+0     0.00000000000000E+0     0.00000000000000E+0
0.00000000000000E+0     0.00000000000000E+0
   BmDistLoadG            9     349       Z        1      2.31000000000000E+0
2.31000000000000E+0     0.00000000000000E+0     0.00000000000000E+0
0.00000000000000E+0     0.00000000000000E+0
   BmDistLoadG            9     350       Z        1      2.31000000000000E+0
2.31000000000000E+0     0.00000000000000E+0     0.00000000000000E+0
0.00000000000000E+0     0.00000000000000E+0
   BmDistLoadG            9     351       Z        1      2.31000000000000E+0
2.31000000000000E+0     0.00000000000000E+0     0.00000000000000E+0
0.00000000000000E+0     0.00000000000000E+0
   BmDistLoadG            9     352       Z        1      2.31000000000000E+0
2.31000000000000E+0     0.00000000000000E+0     0.00000000000000E+0
0.00000000000000E+0     0.00000000000000E+0
   BmDistLoadG            9     353       Z        1      2.31000000000000E+0
2.31000000000000E+0     0.00000000000000E+0     0.00000000000000E+0
0.00000000000000E+0     0.00000000000000E+0
   BmDistLoadG            9     354       Z        1      2.31000000000000E+0
2.31000000000000E+0     0.00000000000000E+0     0.00000000000000E+0
0.00000000000000E+0     0.00000000000000E+0
   BmDistLoadG            9     355       Z        1      2.31000000000000E+0
2.31000000000000E+0     0.00000000000000E+0     0.00000000000000E+0
0.00000000000000E+0     0.00000000000000E+0
   BmDistLoadG            9     356       Z        1      2.31000000000000E+0
2.31000000000000E+0     0.00000000000000E+0     0.00000000000000E+0
0.00000000000000E+0     0.00000000000000E+0
   BmDistLoadG            9     357       Z        1      2.31000000000000E+0
2.31000000000000E+0     0.00000000000000E+0     0.00000000000000E+0
0.00000000000000E+0     0.00000000000000E+0
```

```
   BmDistLoadG              9     358        Z      1     2.31000000000000E+0
2.31000000000000E+0      0.00000000000000E+0      0.00000000000000E+0
0.00000000000000E+0      0.00000000000000E+0
   BmDistLoadG              9     359        Z      1     2.31000000000000E+0
2.31000000000000E+0      0.00000000000000E+0      0.00000000000000E+0
0.00000000000000E+0      0.00000000000000E+0
   BmDistLoadG              9     360        Z      1     2.31000000000000E+0
2.31000000000000E+0      0.00000000000000E+0      0.00000000000000E+0
0.00000000000000E+0      0.00000000000000E+0
   BmDistLoadG              9     361        Z      1     2.31000000000000E+0
2.31000000000000E+0      0.00000000000000E+0      0.00000000000000E+0
0.00000000000000E+0      0.00000000000000E+0
   BmDistLoadG              9     362        Z      1     2.31000000000000E+0
2.31000000000000E+0      0.00000000000000E+0      0.00000000000000E+0
0.00000000000000E+0      0.00000000000000E+0
   BmDistLoadG              9     363        Z      1     2.31000000000000E+0
2.31000000000000E+0      0.00000000000000E+0      0.00000000000000E+0
0.00000000000000E+0      0.00000000000000E+0
   BmDistLoadG              9     364        Z      1     2.31000000000000E+0
2.31000000000000E+0      0.00000000000000E+0      0.00000000000000E+0
0.00000000000000E+0      0.00000000000000E+0
   BmDistLoadG              9     365        Z      1     2.31000000000000E+0
2.31000000000000E+0      0.00000000000000E+0      0.00000000000000E+0
0.00000000000000E+0      0.00000000000000E+0
   BmDistLoadG              9     366        Z      1     2.31000000000000E+0
2.31000000000000E+0      0.00000000000000E+0      0.00000000000000E+0
0.00000000000000E+0      0.00000000000000E+0
   BmDistLoadG              9     367        Z      1     2.31000000000000E+0
2.31000000000000E+0      0.00000000000000E+0      0.00000000000000E+0
0.00000000000000E+0      0.00000000000000E+0
   BmDistLoadG              9     368        Z      1     2.31000000000000E+0
2.31000000000000E+0      0.00000000000000E+0      0.00000000000000E+0
0.00000000000000E+0      0.00000000000000E+0
   BmDistLoadG              9     369        Z      1     2.31000000000000E+0
2.31000000000000E+0      0.00000000000000E+0      0.00000000000000E+0
0.00000000000000E+0      0.00000000000000E+0
   BmDistLoadG              9     370        Z      1     2.31000000000000E+0
2.31000000000000E+0      0.00000000000000E+0      0.00000000000000E+0
0.00000000000000E+0      0.00000000000000E+0
   BmDistLoadG              9     371        Z      1     2.31000000000000E+0
2.31000000000000E+0      0.00000000000000E+0      0.00000000000000E+0
0.00000000000000E+0      0.00000000000000E+0
   BmDistLoadG              9     372        Z      1     2.31000000000000E+0
2.31000000000000E+0      0.00000000000000E+0      0.00000000000000E+0
0.00000000000000E+0      0.00000000000000E+0
   BmDistLoadG              9     373        Z      1     2.31000000000000E+0
2.31000000000000E+0      0.00000000000000E+0      0.00000000000000E+0
0.00000000000000E+0      0.00000000000000E+0
   BmDistLoadG              9     374        Z      1     2.31000000000000E+0
2.31000000000000E+0      0.00000000000000E+0      0.00000000000000E+0
0.00000000000000E+0      0.00000000000000E+0
   BmDistLoadG              9     375        Z      1     2.31000000000000E+0
2.31000000000000E+0      0.00000000000000E+0      0.00000000000000E+0
0.00000000000000E+0      0.00000000000000E+0
```

```
   BmDistLoadG              9     376      Z      1     2.31000000000000E+0
2.31000000000000E+0      0.00000000000000E+0      0.00000000000000E+0
0.00000000000000E+0      0.00000000000000E+0
   BmDistLoadG              9     377      Z      1     2.31000000000000E+0
2.31000000000000E+0      0.00000000000000E+0      0.00000000000000E+0
0.00000000000000E+0      0.00000000000000E+0
   BmDistLoadG              9     378      Z      1     2.31000000000000E+0
2.31000000000000E+0      0.00000000000000E+0      0.00000000000000E+0
0.00000000000000E+0      0.00000000000000E+0
   BmDistLoadG              9     379      Z      1     2.31000000000000E+0
2.31000000000000E+0      0.00000000000000E+0      0.00000000000000E+0
0.00000000000000E+0      0.00000000000000E+0
   BmDistLoadG              9     380      Z      1     2.31000000000000E+0
2.31000000000000E+0      0.00000000000000E+0      0.00000000000000E+0
0.00000000000000E+0      0.00000000000000E+0
   BmDistLoadG              9     381      Z      1     2.31000000000000E+0
2.31000000000000E+0      0.00000000000000E+0      0.00000000000000E+0
0.00000000000000E+0      0.00000000000000E+0
   BmDistLoadG              9     382      Z      1     2.31000000000000E+0
2.31000000000000E+0      0.00000000000000E+0      0.00000000000000E+0
0.00000000000000E+0      0.00000000000000E+0
   BmDistLoadG              9     383      Z      1     2.31000000000000E+0
2.31000000000000E+0      0.00000000000000E+0      0.00000000000000E+0
0.00000000000000E+0      0.00000000000000E+0
   BmDistLoadG              9     384      Z      1     2.31000000000000E+0
2.31000000000000E+0      0.00000000000000E+0      0.00000000000000E+0
0.00000000000000E+0      0.00000000000000E+0
   BmDistLoadG              9     385      Z      1     2.31000000000000E+0
2.31000000000000E+0      0.00000000000000E+0      0.00000000000000E+0
0.00000000000000E+0      0.00000000000000E+0
   BmDistLoadG              9     386      Z      1     2.31000000000000E+0
2.31000000000000E+0      0.00000000000000E+0      0.00000000000000E+0
0.00000000000000E+0      0.00000000000000E+0
   BmDistLoadG              9     387      Z      1     2.31000000000000E+0
2.31000000000000E+0      0.00000000000000E+0      0.00000000000000E+0
0.00000000000000E+0      0.00000000000000E+0
   BmDistLoadG              9     388      Z      1     2.31000000000000E+0
2.31000000000000E+0      0.00000000000000E+0      0.00000000000000E+0
0.00000000000000E+0      0.00000000000000E+0
   BmDistLoadG              9     389      Z      1     2.31000000000000E+0
2.31000000000000E+0      0.00000000000000E+0      0.00000000000000E+0
0.00000000000000E+0      0.00000000000000E+0
   BmDistLoadG              9     390      Z      1     2.31000000000000E+0
2.31000000000000E+0      0.00000000000000E+0      0.00000000000000E+0
0.00000000000000E+0      0.00000000000000E+0
   BmDistLoadG              9     391      Z      1     2.31000000000000E+0
2.31000000000000E+0      0.00000000000000E+0      0.00000000000000E+0
0.00000000000000E+0      0.00000000000000E+0
   BmDistLoadG              9     392      Z      1     2.31000000000000E+0
2.31000000000000E+0      0.00000000000000E+0      0.00000000000000E+0
0.00000000000000E+0      0.00000000000000E+0
   BmDistLoadG              9     393      Z      1     2.31000000000000E+0
2.31000000000000E+0      0.00000000000000E+0      0.00000000000000E+0
0.00000000000000E+0      0.00000000000000E+0
```

```
   BmDistLoadG              9     394      Z        1     2.31000000000000E+0
2.31000000000000E+0     0.00000000000000E+0     0.00000000000000E+0
0.00000000000000E+0     0.00000000000000E+0
   BmDistLoadG              9     395      Z        1     2.31000000000000E+0
2.31000000000000E+0     0.00000000000000E+0     0.00000000000000E+0
0.00000000000000E+0     0.00000000000000E+0
   BmDistLoadG              9     396      Z        1     2.31000000000000E+0
2.31000000000000E+0     0.00000000000000E+0     0.00000000000000E+0
0.00000000000000E+0     0.00000000000000E+0
   BmDistLoadG              9     397      Z        1     2.31000000000000E+0
2.31000000000000E+0     0.00000000000000E+0     0.00000000000000E+0
0.00000000000000E+0     0.00000000000000E+0
   BmDistLoadG              9     398      Z        1     2.31000000000000E+0
2.31000000000000E+0     0.00000000000000E+0     0.00000000000000E+0
0.00000000000000E+0     0.00000000000000E+0
   BmDistLoadG              9     399      Z        1     2.31000000000000E+0
2.31000000000000E+0     0.00000000000000E+0     0.00000000000000E+0
0.00000000000000E+0     0.00000000000000E+0
   BmDistLoadG              9     400      Z        1     2.31000000000000E+0
2.31000000000000E+0     0.00000000000000E+0     0.00000000000000E+0
0.00000000000000E+0     0.00000000000000E+0
   BmDistLoadG              9     401      Z        1     2.31000000000000E+0
2.31000000000000E+0     0.00000000000000E+0     0.00000000000000E+0
0.00000000000000E+0     0.00000000000000E+0
   BmDistLoadG              9     402      Z        1     2.31000000000000E+0
2.31000000000000E+0     0.00000000000000E+0     0.00000000000000E+0
0.00000000000000E+0     0.00000000000000E+0
   BmDistLoadG              9     403      Z        1     2.31000000000000E+0
2.31000000000000E+0     0.00000000000000E+0     0.00000000000000E+0
0.00000000000000E+0     0.00000000000000E+0
   BmDistLoadG              9     404      Z        1     2.31000000000000E+0
2.31000000000000E+0     0.00000000000000E+0     0.00000000000000E+0
0.00000000000000E+0     0.00000000000000E+0
   BmDistLoadG              9     405      Z        1     2.31000000000000E+0
2.31000000000000E+0     0.00000000000000E+0     0.00000000000000E+0
0.00000000000000E+0     0.00000000000000E+0
   BmDistLoadG              9     406      Z        1     2.31000000000000E+0
2.31000000000000E+0     0.00000000000000E+0     0.00000000000000E+0
0.00000000000000E+0     0.00000000000000E+0
   BmDistLoadG              9     407      Z        1     2.31000000000000E+0
2.31000000000000E+0     0.00000000000000E+0     0.00000000000000E+0
0.00000000000000E+0     0.00000000000000E+0
   BmDistLoadG              9     408      Z        1     2.31000000000000E+0
2.31000000000000E+0     0.00000000000000E+0     0.00000000000000E+0
0.00000000000000E+0     0.00000000000000E+0
   BmDistLoadG              9     409      Z        1     2.31000000000000E+0
2.31000000000000E+0     0.00000000000000E+0     0.00000000000000E+0
0.00000000000000E+0     0.00000000000000E+0
   BmDistLoadG              9     410      Z        1     2.31000000000000E+0
2.31000000000000E+0     0.00000000000000E+0     0.00000000000000E+0
0.00000000000000E+0     0.00000000000000E+0
   BmDistLoadG              9     411      Z        1     2.31000000000000E+0
2.31000000000000E+0     0.00000000000000E+0     0.00000000000000E+0
0.00000000000000E+0     0.00000000000000E+0
```

```
   BmDistLoadG              9     412       Z       1      2.31000000000000E+0
2.31000000000000E+0     0.00000000000000E+0     0.00000000000000E+0
0.00000000000000E+0     0.00000000000000E+0
   BmDistLoadG              9     413       Z       1      2.31000000000000E+0
2.31000000000000E+0     0.00000000000000E+0     0.00000000000000E+0
0.00000000000000E+0     0.00000000000000E+0
   BmDistLoadG              9     414       Z       1      2.31000000000000E+0
2.31000000000000E+0     0.00000000000000E+0     0.00000000000000E+0
0.00000000000000E+0     0.00000000000000E+0
   BmDistLoadG              9     415       Z       1      2.31000000000000E+0
2.31000000000000E+0     0.00000000000000E+0     0.00000000000000E+0
0.00000000000000E+0     0.00000000000000E+0
   BmDistLoadG              9     416       Z       1      2.31000000000000E+0
2.31000000000000E+0     0.00000000000000E+0     0.00000000000000E+0
0.00000000000000E+0     0.00000000000000E+0
   BmDistLoadG              9     417       Z       1      2.31000000000000E+0
2.31000000000000E+0     0.00000000000000E+0     0.00000000000000E+0
0.00000000000000E+0     0.00000000000000E+0
   BmDistLoadG              9     418       Z       1      2.31000000000000E+0
2.31000000000000E+0     0.00000000000000E+0     0.00000000000000E+0
0.00000000000000E+0     0.00000000000000E+0
   BmDistLoadG              9     419       Z       1      2.31000000000000E+0
2.31000000000000E+0     0.00000000000000E+0     0.00000000000000E+0
0.00000000000000E+0     0.00000000000000E+0
   BmDistLoadG              9     420       Z       1      2.31000000000000E+0
2.31000000000000E+0     0.00000000000000E+0     0.00000000000000E+0
0.00000000000000E+0     0.00000000000000E+0
   BmDistLoadG              9     421       Z       1      2.31000000000000E+0
2.31000000000000E+0     0.00000000000000E+0     0.00000000000000E+0
0.00000000000000E+0     0.00000000000000E+0
   BmDistLoadG              9     422       Z       1      2.31000000000000E+0
2.31000000000000E+0     0.00000000000000E+0     0.00000000000000E+0
0.00000000000000E+0     0.00000000000000E+0
   BmDistLoadG              9     423       Z       1      2.31000000000000E+0
2.31000000000000E+0     0.00000000000000E+0     0.00000000000000E+0
0.00000000000000E+0     0.00000000000000E+0
   BmDistLoadG              9     424       Z       1      2.31000000000000E+0
2.31000000000000E+0     0.00000000000000E+0     0.00000000000000E+0
0.00000000000000E+0     0.00000000000000E+0
   BmDistLoadG              9     425       Z       1      2.31000000000000E+0
2.31000000000000E+0     0.00000000000000E+0     0.00000000000000E+0
0.00000000000000E+0     0.00000000000000E+0
   BmDistLoadG              9     426       Z       1      2.31000000000000E+0
2.31000000000000E+0     0.00000000000000E+0     0.00000000000000E+0
0.00000000000000E+0     0.00000000000000E+0
   BmDistLoadG              9     427       Z       1      2.31000000000000E+0
2.31000000000000E+0     0.00000000000000E+0     0.00000000000000E+0
0.00000000000000E+0     0.00000000000000E+0
   BmDistLoadG              9     428       Z       1      2.31000000000000E+0
2.31000000000000E+0     0.00000000000000E+0     0.00000000000000E+0
0.00000000000000E+0     0.00000000000000E+0
   BmDistLoadG              9     429       Z       1      2.31000000000000E+0
2.31000000000000E+0     0.00000000000000E+0     0.00000000000000E+0
0.00000000000000E+0     0.00000000000000E+0
```

```
   BmDistLoadG              9     430      Z      1     2.31000000000000E+0
2.31000000000000E+0      0.00000000000000E+0      0.00000000000000E+0
0.00000000000000E+0      0.00000000000000E+0
   BmDistLoadG              9     431      Z      1     2.31000000000000E+0
2.31000000000000E+0      0.00000000000000E+0      0.00000000000000E+0
0.00000000000000E+0      0.00000000000000E+0
   BmDistLoadG              9     432      Z      1     2.31000000000000E+0
2.31000000000000E+0      0.00000000000000E+0      0.00000000000000E+0
0.00000000000000E+0      0.00000000000000E+0
   BmDistLoadG              9     433      Z      1     2.31000000000000E+0
2.31000000000000E+0      0.00000000000000E+0      0.00000000000000E+0
0.00000000000000E+0      0.00000000000000E+0
   BmDistLoadG              9     434      Y      1    -3.30000000000000E+0
-3.30000000000000E+0      0.00000000000000E+0      0.00000000000000E+0
0.00000000000000E+0      0.00000000000000E+0
   BmDistLoadG              9     435      Y      1    -3.30000000000000E+0
-3.30000000000000E+0      0.00000000000000E+0      0.00000000000000E+0
0.00000000000000E+0      0.00000000000000E+0
   BmDistLoadG              9     436      Y      1    -3.30000000000000E+0
-3.30000000000000E+0      0.00000000000000E+0      0.00000000000000E+0
0.00000000000000E+0      0.00000000000000E+0
   BmDistLoadG              9     437      Y      1    -3.30000000000000E+0
-3.30000000000000E+0      0.00000000000000E+0      0.00000000000000E+0
0.00000000000000E+0      0.00000000000000E+0
   BmDistLoadG              9     438      Y      1    -3.30000000000000E+0
-3.30000000000000E+0      0.00000000000000E+0      0.00000000000000E+0
0.00000000000000E+0      0.00000000000000E+0
   BmDistLoadG              9     449      Y      1    -1.76000000000000E+0
-1.76000000000000E+0      0.00000000000000E+0      0.00000000000000E+0
0.00000000000000E+0      0.00000000000000E+0
   BmDistLoadG              9     450      Y      1    -1.76000000000000E+0
-1.76000000000000E+0      0.00000000000000E+0      0.00000000000000E+0
0.00000000000000E+0      0.00000000000000E+0
   BmDistLoadG              9     451      Y      1    -1.76000000000000E+0
-1.76000000000000E+0      0.00000000000000E+0      0.00000000000000E+0
0.00000000000000E+0      0.00000000000000E+0
   BmDistLoadG              9     452      Y      1    -1.76000000000000E+0
-1.76000000000000E+0      0.00000000000000E+0      0.00000000000000E+0
0.00000000000000E+0      0.00000000000000E+0
   BmDistLoadG              9     453      Y      1    -1.76000000000000E+0
-1.76000000000000E+0      0.00000000000000E+0      0.00000000000000E+0
0.00000000000000E+0      0.00000000000000E+0
   BmDistLoadG              9     454      Y      1    -1.76000000000000E+0
-1.76000000000000E+0      0.00000000000000E+0      0.00000000000000E+0
0.00000000000000E+0      0.00000000000000E+0
   BmDistLoadG              9     455      Y      1    -1.76000000000000E+0
-1.76000000000000E+0      0.00000000000000E+0      0.00000000000000E+0
0.00000000000000E+0      0.00000000000000E+0
   BmDistLoadG              9     456      Y      1    -1.76000000000000E+0
-1.76000000000000E+0      0.00000000000000E+0      0.00000000000000E+0
0.00000000000000E+0      0.00000000000000E+0
   BmDistLoadG              9     457      Y      1    -1.76000000000000E+0
-1.76000000000000E+0      0.00000000000000E+0      0.00000000000000E+0
0.00000000000000E+0      0.00000000000000E+0
```

```
   BmDistLoadG            9     458       Y       1    -1.76000000000000E+0
-1.76000000000000E+0     0.00000000000000E+0      0.00000000000000E+0
0.00000000000000E+0     0.00000000000000E+0
   BmDistLoadG            9     459       Y       1    -1.76000000000000E+0
-1.76000000000000E+0     0.00000000000000E+0      0.00000000000000E+0
0.00000000000000E+0     0.00000000000000E+0
   BmDistLoadG            9     460       Y       1    -1.76000000000000E+0
-1.76000000000000E+0     0.00000000000000E+0      0.00000000000000E+0
0.00000000000000E+0     0.00000000000000E+0
   BmDistLoadG            9     461       Y       1    -1.76000000000000E+0
-1.76000000000000E+0     0.00000000000000E+0      0.00000000000000E+0
0.00000000000000E+0     0.00000000000000E+0
   BmDistLoadG            9     462       Y       1    -1.76000000000000E+0
-1.76000000000000E+0     0.00000000000000E+0      0.00000000000000E+0
0.00000000000000E+0     0.00000000000000E+0
   BmDistLoadG            9     463       Y       1    -1.76000000000000E+0
-1.76000000000000E+0     0.00000000000000E+0      0.00000000000000E+0
0.00000000000000E+0     0.00000000000000E+0
   BmDistLoadG            9     464       Y       1    -1.76000000000000E+0
-1.76000000000000E+0     0.00000000000000E+0      0.00000000000000E+0
0.00000000000000E+0     0.00000000000000E+0
   BmDistLoadG            9     465       Y       1    -1.76000000000000E+0
-1.76000000000000E+0     0.00000000000000E+0      0.00000000000000E+0
0.00000000000000E+0     0.00000000000000E+0
   BmDistLoadG            9     466       Y       1    -1.76000000000000E+0
-1.76000000000000E+0     0.00000000000000E+0      0.00000000000000E+0
0.00000000000000E+0     0.00000000000000E+0
   BmDistLoadG            9     467       Y       1    -1.76000000000000E+0
-1.76000000000000E+0     0.00000000000000E+0      0.00000000000000E+0
0.00000000000000E+0     0.00000000000000E+0
   BmDistLoadG            9     468       Y       1    -1.76000000000000E+0
-1.76000000000000E+0     0.00000000000000E+0      0.00000000000000E+0
0.00000000000000E+0     0.00000000000000E+0
   BmDistLoadG            9     469       Y       1    -1.76000000000000E+0
-1.76000000000000E+0     0.00000000000000E+0      0.00000000000000E+0
0.00000000000000E+0     0.00000000000000E+0
   BmDistLoadG            9     470       Y       1    -1.76000000000000E+0
-1.76000000000000E+0     0.00000000000000E+0      0.00000000000000E+0
0.00000000000000E+0     0.00000000000000E+0
   BmDistLoadG            9     471       Y       1    -1.76000000000000E+0
-1.76000000000000E+0     0.00000000000000E+0      0.00000000000000E+0
0.00000000000000E+0     0.00000000000000E+0
   BmDistLoadG            9     472       Y       1    -1.76000000000000E+0
-1.76000000000000E+0     0.00000000000000E+0      0.00000000000000E+0
0.00000000000000E+0     0.00000000000000E+0
   BmDistLoadG            9     473       Y       1    -1.76000000000000E+0
-1.76000000000000E+0     0.00000000000000E+0      0.00000000000000E+0
0.00000000000000E+0     0.00000000000000E+0
   BmDistLoadG            9     474       Y       1    -1.76000000000000E+0
-1.76000000000000E+0     0.00000000000000E+0      0.00000000000000E+0
0.00000000000000E+0     0.00000000000000E+0
   BmDistLoadG            9     475       Y       1    -1.76000000000000E+0
-1.76000000000000E+0     0.00000000000000E+0      0.00000000000000E+0
0.00000000000000E+0     0.00000000000000E+0
```

BmDistLoadG 9 476 Y 1 -1.76000000000000E+0
-1.76000000000000E+0 0.00000000000000E+0 0.00000000000000E+0
0.00000000000000E+0 0.00000000000000E+0
BmDistLoadG 9 477 Y 1 -1.76000000000000E+0
-1.76000000000000E+0 0.00000000000000E+0 0.00000000000000E+0
0.00000000000000E+0 0.00000000000000E+0
BmDistLoadG 9 478 Y 1 -1.76000000000000E+0
-1.76000000000000E+0 0.00000000000000E+0 0.00000000000000E+0
0.00000000000000E+0 0.00000000000000E+0
BmDistLoadG 9 479 Y 1 -1.76000000000000E+0
-1.76000000000000E+0 0.00000000000000E+0 0.00000000000000E+0
0.00000000000000E+0 0.00000000000000E+0
BmDistLoadG 9 480 Y 1 -1.76000000000000E+0
-1.76000000000000E+0 0.00000000000000E+0 0.00000000000000E+0
0.00000000000000E+0 0.00000000000000E+0
BmDistLoadG 9 481 Y 1 -1.76000000000000E+0
-1.76000000000000E+0 0.00000000000000E+0 0.00000000000000E+0
0.00000000000000E+0 0.00000000000000E+0
BmDistLoadG 9 482 Y 1 -1.76000000000000E+0
-1.76000000000000E+0 0.00000000000000E+0 0.00000000000000E+0
0.00000000000000E+0 0.00000000000000E+0
BmDistLoadG 9 483 Y 1 -1.76000000000000E+0
-1.76000000000000E+0 0.00000000000000E+0 0.00000000000000E+0
0.00000000000000E+0 0.00000000000000E+0
BmDistLoadG 9 484 Y 1 -1.76000000000000E+0
-1.76000000000000E+0 0.00000000000000E+0 0.00000000000000E+0
0.00000000000000E+0 0.00000000000000E+0
BmDistLoadG 9 485 Y 1 -1.76000000000000E+0
-1.76000000000000E+0 0.00000000000000E+0 0.00000000000000E+0
0.00000000000000E+0 0.00000000000000E+0
BmDistLoadG 9 486 Y 1 -1.76000000000000E+0
-1.76000000000000E+0 0.00000000000000E+0 0.00000000000000E+0
0.00000000000000E+0 0.00000000000000E+0
BmDistLoadG 9 487 Y 1 -1.76000000000000E+0
-1.76000000000000E+0 0.00000000000000E+0 0.00000000000000E+0
0.00000000000000E+0 0.00000000000000E+0
BmDistLoadG 9 488 Y 1 -1.76000000000000E+0
-1.76000000000000E+0 0.00000000000000E+0 0.00000000000000E+0
0.00000000000000E+0 0.00000000000000E+0
BmDistLoadG 9 489 Y 1 -1.76000000000000E+0
-1.76000000000000E+0 0.00000000000000E+0 0.00000000000000E+0
0.00000000000000E+0 0.00000000000000E+0
BmDistLoadG 9 490 Y 1 -1.76000000000000E+0
-1.76000000000000E+0 0.00000000000000E+0 0.00000000000000E+0
0.00000000000000E+0 0.00000000000000E+0
BmDistLoadG 9 491 Y 1 -1.76000000000000E+0
-1.76000000000000E+0 0.00000000000000E+0 0.00000000000000E+0
0.00000000000000E+0 0.00000000000000E+0
BmDistLoadG 9 492 Y 1 -1.76000000000000E+0
-1.76000000000000E+0 0.00000000000000E+0 0.00000000000000E+0
0.00000000000000E+0 0.00000000000000E+0
BmDistLoadG 9 493 Y 1 -1.76000000000000E+0
-1.76000000000000E+0 0.00000000000000E+0 0.00000000000000E+0
0.00000000000000E+0 0.00000000000000E+0

```
   BmDistLoadG             9     494       Y       1    -1.76000000000000E+0
-1.76000000000000E+0      0.00000000000000E+0      0.00000000000000E+0
0.00000000000000E+0      0.00000000000000E+0
   BmDistLoadG             9     495       Y       1    -1.76000000000000E+0
-1.76000000000000E+0      0.00000000000000E+0      0.00000000000000E+0
0.00000000000000E+0      0.00000000000000E+0
   BmDistLoadG             9     496       Y       1    -1.76000000000000E+0
-1.76000000000000E+0      0.00000000000000E+0      0.00000000000000E+0
0.00000000000000E+0      0.00000000000000E+0
   BmDistLoadG             9     497       Y       1    -1.76000000000000E+0
-1.76000000000000E+0      0.00000000000000E+0      0.00000000000000E+0
0.00000000000000E+0      0.00000000000000E+0
   BmDistLoadG             9     498       Y       1    -1.76000000000000E+0
-1.76000000000000E+0      0.00000000000000E+0      0.00000000000000E+0
0.00000000000000E+0      0.00000000000000E+0
   BmDistLoadG             9     499       Y       1    -1.76000000000000E+0
-1.76000000000000E+0      0.00000000000000E+0      0.00000000000000E+0
0.00000000000000E+0      0.00000000000000E+0
   BmDistLoadG             9     500       Y       1    -1.76000000000000E+0
-1.76000000000000E+0      0.00000000000000E+0      0.00000000000000E+0
0.00000000000000E+0      0.00000000000000E+0
   BmDistLoadG             9     501       Y       1    -1.76000000000000E+0
-1.76000000000000E+0      0.00000000000000E+0      0.00000000000000E+0
0.00000000000000E+0      0.00000000000000E+0
   BmDistLoadG             9     502       Y       1    -1.76000000000000E+0
-1.76000000000000E+0      0.00000000000000E+0      0.00000000000000E+0
0.00000000000000E+0      0.00000000000000E+0
   BmDistLoadG             9     503       Y       1    -1.76000000000000E+0
-1.76000000000000E+0      0.00000000000000E+0      0.00000000000000E+0
0.00000000000000E+0      0.00000000000000E+0
   BmDistLoadG             9     504       Y       1    -1.76000000000000E+0
-1.76000000000000E+0      0.00000000000000E+0      0.00000000000000E+0
0.00000000000000E+0      0.00000000000000E+0
   BmDistLoadG             9     505       Y       1    -1.76000000000000E+0
-1.76000000000000E+0      0.00000000000000E+0      0.00000000000000E+0
0.00000000000000E+0      0.00000000000000E+0
   BmDistLoadG             9     506       Y       1    -1.76000000000000E+0
-1.76000000000000E+0      0.00000000000000E+0      0.00000000000000E+0
0.00000000000000E+0      0.00000000000000E+0
   BmDistLoadG             9     507       Y       1    -1.76000000000000E+0
-1.76000000000000E+0      0.00000000000000E+0      0.00000000000000E+0
0.00000000000000E+0      0.00000000000000E+0
   BmDistLoadG             9     508       Y       1    -1.76000000000000E+0
-1.76000000000000E+0      0.00000000000000E+0      0.00000000000000E+0
0.00000000000000E+0      0.00000000000000E+0
   BmDistLoadG             9     509       Y       1    -1.76000000000000E+0
-1.76000000000000E+0      0.00000000000000E+0      0.00000000000000E+0
0.00000000000000E+0      0.00000000000000E+0
   BmDistLoadG             9     510       Y       1    -1.76000000000000E+0
-1.76000000000000E+0      0.00000000000000E+0      0.00000000000000E+0
0.00000000000000E+0      0.00000000000000E+0
   BmDistLoadG             9     511       Y       1    -1.76000000000000E+0
-1.76000000000000E+0      0.00000000000000E+0      0.00000000000000E+0
0.00000000000000E+0      0.00000000000000E+0
```

```
   BmDistLoadG              9     512      Y      1    -1.76000000000000E+0
-1.76000000000000E+0      0.00000000000000E+0      0.00000000000000E+0
0.00000000000000E+0      0.00000000000000E+0
   BmDistLoadG              9     513      Y      1    -1.76000000000000E+0
-1.76000000000000E+0      0.00000000000000E+0      0.00000000000000E+0
0.00000000000000E+0      0.00000000000000E+0
   BmDistLoadG              9     514      Y      1    -1.76000000000000E+0
-1.76000000000000E+0      0.00000000000000E+0      0.00000000000000E+0
0.00000000000000E+0      0.00000000000000E+0
   BmDistLoadG              9     515      Y      1    -1.76000000000000E+0
-1.76000000000000E+0      0.00000000000000E+0      0.00000000000000E+0
0.00000000000000E+0      0.00000000000000E+0
   BmDistLoadG              9     516      Y      1    -1.76000000000000E+0
-1.76000000000000E+0      0.00000000000000E+0      0.00000000000000E+0
0.00000000000000E+0      0.00000000000000E+0
   BmDistLoadG              9     517      Y      1    -1.76000000000000E+0
-1.76000000000000E+0      0.00000000000000E+0      0.00000000000000E+0
0.00000000000000E+0      0.00000000000000E+0
   BmDistLoadG              9     518      Y      1    -1.76000000000000E+0
-1.76000000000000E+0      0.00000000000000E+0      0.00000000000000E+0
0.00000000000000E+0      0.00000000000000E+0
   BmDistLoadG              9     519      Y      1    -1.76000000000000E+0
-1.76000000000000E+0      0.00000000000000E+0      0.00000000000000E+0
0.00000000000000E+0      0.00000000000000E+0
   BmDistLoadG              9     520      Y      1    -1.76000000000000E+0
-1.76000000000000E+0      0.00000000000000E+0      0.00000000000000E+0
0.00000000000000E+0      0.00000000000000E+0
   BmDistLoadG              9     521      Y      1    -1.76000000000000E+0
-1.76000000000000E+0      0.00000000000000E+0      0.00000000000000E+0
0.00000000000000E+0      0.00000000000000E+0
   BmDistLoadG              9     522      Y      1    -1.76000000000000E+0
-1.76000000000000E+0      0.00000000000000E+0      0.00000000000000E+0
0.00000000000000E+0      0.00000000000000E+0
   BmDistLoadG              9     523      Y      1    -1.76000000000000E+0
-1.76000000000000E+0      0.00000000000000E+0      0.00000000000000E+0
0.00000000000000E+0      0.00000000000000E+0
   BmDistLoadG              9     524      Y      1    -1.76000000000000E+0
-1.76000000000000E+0      0.00000000000000E+0      0.00000000000000E+0
0.00000000000000E+0      0.00000000000000E+0
   BmDistLoadG              9     525      Y      1    -1.76000000000000E+0
-1.76000000000000E+0      0.00000000000000E+0      0.00000000000000E+0
0.00000000000000E+0      0.00000000000000E+0
   BmDistLoadG              9     526      Y      1    -1.76000000000000E+0
-1.76000000000000E+0      0.00000000000000E+0      0.00000000000000E+0
0.00000000000000E+0      0.00000000000000E+0
   BmDistLoadG              9     527      Y      1    -1.76000000000000E+0
-1.76000000000000E+0      0.00000000000000E+0      0.00000000000000E+0
0.00000000000000E+0      0.00000000000000E+0
   BmDistLoadG              9     528      Y      1    -1.76000000000000E+0
-1.76000000000000E+0      0.00000000000000E+0      0.00000000000000E+0
0.00000000000000E+0      0.00000000000000E+0
   BmDistLoadG              9     529      Y      1    -1.76000000000000E+0
-1.76000000000000E+0      0.00000000000000E+0      0.00000000000000E+0
0.00000000000000E+0      0.00000000000000E+0
```

```
   BmDistLoadG              9      530       Y       1    -1.76000000000000E+0
-1.76000000000000E+0      0.00000000000000E+0      0.00000000000000E+0
0.00000000000000E+0      0.00000000000000E+0
   BmDistLoadG              9      531       Y       1    -1.76000000000000E+0
-1.76000000000000E+0      0.00000000000000E+0      0.00000000000000E+0
0.00000000000000E+0      0.00000000000000E+0
   BmDistLoadG              9      532       Y       1    -1.76000000000000E+0
-1.76000000000000E+0      0.00000000000000E+0      0.00000000000000E+0
0.00000000000000E+0      0.00000000000000E+0
   BmDistLoadG              9      533       Y       1    -1.76000000000000E+0
-1.76000000000000E+0      0.00000000000000E+0      0.00000000000000E+0
0.00000000000000E+0      0.00000000000000E+0
   BmDistLoadG              9      534       Y       1    -1.76000000000000E+0
-1.76000000000000E+0      0.00000000000000E+0      0.00000000000000E+0
0.00000000000000E+0      0.00000000000000E+0
   BmDistLoadG              9      535       Y       1    -1.76000000000000E+0
-1.76000000000000E+0      0.00000000000000E+0      0.00000000000000E+0
0.00000000000000E+0      0.00000000000000E+0
   BmDistLoadG              9      536       Y       1    -1.76000000000000E+0
-1.76000000000000E+0      0.00000000000000E+0      0.00000000000000E+0
0.00000000000000E+0      0.00000000000000E+0
   BmDistLoadG              9      537       Y       1    -1.76000000000000E+0
-1.76000000000000E+0      0.00000000000000E+0      0.00000000000000E+0
0.00000000000000E+0      0.00000000000000E+0
   BmDistLoadG              9      538       Y       1    -1.76000000000000E+0
-1.76000000000000E+0      0.00000000000000E+0      0.00000000000000E+0
0.00000000000000E+0      0.00000000000000E+0
   BmDistLoadG              9      539       Y       1    -1.76000000000000E+0
-1.76000000000000E+0      0.00000000000000E+0      0.00000000000000E+0
0.00000000000000E+0      0.00000000000000E+0
   BmDistLoadG              9      540       Y       1    -1.76000000000000E+0
-1.76000000000000E+0      0.00000000000000E+0      0.00000000000000E+0
0.00000000000000E+0      0.00000000000000E+0
   BmDistLoadG              9      541       Y       1    -1.76000000000000E+0
-1.76000000000000E+0      0.00000000000000E+0      0.00000000000000E+0
0.00000000000000E+0      0.00000000000000E+0
   BmDistLoadG              9      542       Y       1    -1.76000000000000E+0
-1.76000000000000E+0      0.00000000000000E+0      0.00000000000000E+0
0.00000000000000E+0      0.00000000000000E+0
   BmDistLoadG              9      543       Y       1    -1.76000000000000E+0
-1.76000000000000E+0      0.00000000000000E+0      0.00000000000000E+0
0.00000000000000E+0      0.00000000000000E+0
   BmDistLoadG              9      544       Y       1    -1.76000000000000E+0
-1.76000000000000E+0      0.00000000000000E+0      0.00000000000000E+0
0.00000000000000E+0      0.00000000000000E+0
   BmDistLoadG              9      545       Y       1    -1.76000000000000E+0
-1.76000000000000E+0      0.00000000000000E+0      0.00000000000000E+0
0.00000000000000E+0      0.00000000000000E+0
   BmDistLoadG              9      546       Y       1    -1.76000000000000E+0
-1.76000000000000E+0      0.00000000000000E+0      0.00000000000000E+0
0.00000000000000E+0      0.00000000000000E+0
   BmDistLoadG              9      547       Y       1    -1.76000000000000E+0
-1.76000000000000E+0      0.00000000000000E+0      0.00000000000000E+0
0.00000000000000E+0      0.00000000000000E+0
```

```
   BmDistLoadG              9     548      Y      1    -1.76000000000000E+0
-1.76000000000000E+0      0.00000000000000E+0      0.00000000000000E+0
0.00000000000000E+0      0.00000000000000E+0
   BmDistLoadG              9     549      Y      1    -1.76000000000000E+0
-1.76000000000000E+0      0.00000000000000E+0      0.00000000000000E+0
0.00000000000000E+0      0.00000000000000E+0
   BmDistLoadG              9     550      Y      1    -1.76000000000000E+0
-1.76000000000000E+0      0.00000000000000E+0      0.00000000000000E+0
0.00000000000000E+0      0.00000000000000E+0
   BmDistLoadG              9     551      Y      1    -1.76000000000000E+0
-1.76000000000000E+0      0.00000000000000E+0      0.00000000000000E+0
0.00000000000000E+0      0.00000000000000E+0
   BmDistLoadG              9     552      Y      1    -1.76000000000000E+0
-1.76000000000000E+0      0.00000000000000E+0      0.00000000000000E+0
0.00000000000000E+0       0.00000000000000E+0
   BmDistLoadG              9     553      Y      1    -1.76000000000000E+0
-1.76000000000000E+0      0.00000000000000E+0      0.00000000000000E+0
0.00000000000000E+0      0.00000000000000E+0
   BmDistLoadG              9     554      Y      1    -1.76000000000000E+0
-1.76000000000000E+0      0.00000000000000E+0      0.00000000000000E+0
0.00000000000000E+0      0.00000000000000E+0
   BmDistLoadG              9     555      Y      1    -1.76000000000000E+0
-1.76000000000000E+0      0.00000000000000E+0      0.00000000000000E+0
0.00000000000000E+0      0.00000000000000E+0
   BmDistLoadG              9     556      Y      1    -1.76000000000000E+0
-1.76000000000000E+0      0.00000000000000E+0      0.00000000000000E+0
0.00000000000000E+0       0.00000000000000E+0
   BmDistLoadG              9     557      Y      1    -1.76000000000000E+0
-1.76000000000000E+0      0.00000000000000E+0      0.00000000000000E+0
0.00000000000000E+0      0.00000000000000E+0
   BmDistLoadG              9     558      Y      1    -1.76000000000000E+0
-1.76000000000000E+0      0.00000000000000E+0      0.00000000000000E+0
0.00000000000000E+0      0.00000000000000E+0
   BmDistLoadG              9     635      Y      1    -1.76000000000000E+0
-1.76000000000000E+0      0.00000000000000E+0      0.00000000000000E+0
0.00000000000000E+0      0.00000000000000E+0
   BmDistLoadG              9     636      Y      1    -1.76000000000000E+0
-1.76000000000000E+0      0.00000000000000E+0      0.00000000000000E+0
0.00000000000000E+0      0.00000000000000E+0
   BmDistLoadG              9     649      Z      1     1.15500000000000E+0
1.15500000000000E+0      0.00000000000000E+0      0.00000000000000E+0
0.00000000000000E+0      0.00000000000000E+0
   BmDistLoadG              9     650      Z      1     1.15500000000000E+0
1.15500000000000E+0      0.00000000000000E+0      0.00000000000000E+0
0.00000000000000E+0      0.00000000000000E+0
   BmDistLoadG              9     651      Z      1     1.15500000000000E+0
1.15500000000000E+0      0.00000000000000E+0      0.00000000000000E+0
0.00000000000000E+0      0.00000000000000E+0
   BmDistLoadG              9     652      Z      1     1.15500000000000E+0
1.15500000000000E+0      0.00000000000000E+0      0.00000000000000E+0
0.00000000000000E+0      0.00000000000000E+0
   BmDistLoadG              9     653      Z      1     2.31000000000000E+0
2.31000000000000E+0      0.00000000000000E+0      0.00000000000000E+0
0.00000000000000E+0      0.00000000000000E+0
```

```
   BmDistLoadG              9     654      Z      1     2.31000000000000E+0
2.31000000000000E+0      0.00000000000000E+0      0.00000000000000E+0
0.00000000000000E+0      0.00000000000000E+0
   BmDistLoadG              9     655      Z      1     2.31000000000000E+0
2.31000000000000E+0      0.00000000000000E+0      0.00000000000000E+0
0.00000000000000E+0      0.00000000000000E+0
   BmDistLoadG              9     656      Z      1     2.31000000000000E+0
2.31000000000000E+0      0.00000000000000E+0      0.00000000000000E+0
0.00000000000000E+0      0.00000000000000E+0
   BmDistLoadG              9     657      Z      1     2.31000000000000E+0
2.31000000000000E+0      0.00000000000000E+0      0.00000000000000E+0
0.00000000000000E+0      0.00000000000000E+0
   BmDistLoadG              9     658      Z      1     2.31000000000000E+0
2.31000000000000E+0      0.00000000000000E+0      0.00000000000000E+0
0.00000000000000E+0      0.00000000000000E+0
   BmDistLoadG              9     659      Z      1     2.31000000000000E+0
2.31000000000000E+0      0.00000000000000E+0      0.00000000000000E+0
0.00000000000000E+0      0.00000000000000E+0
   BmDistLoadG              9     660      Z      1     2.31000000000000E+0
2.31000000000000E+0      0.00000000000000E+0      0.00000000000000E+0
0.00000000000000E+0      0.00000000000000E+0
   BmDistLoadG              9     661      Z      1     2.31000000000000E+0
2.31000000000000E+0      0.00000000000000E+0      0.00000000000000E+0
0.00000000000000E+0      0.00000000000000E+0
   BmDistLoadG              9     662      Z      1     2.31000000000000E+0
2.31000000000000E+0      0.00000000000000E+0      0.00000000000000E+0
0.00000000000000E+0      0.00000000000000E+0
   BmDistLoadG              9     663      Z      1     2.31000000000000E+0
2.31000000000000E+0      0.00000000000000E+0      0.00000000000000E+0
0.00000000000000E+0      0.00000000000000E+0
   BmDistLoadG              9     664      Z      1     2.31000000000000E+0
2.31000000000000E+0      0.00000000000000E+0      0.00000000000000E+0
0.00000000000000E+0      0.00000000000000E+0
   BmDistLoadG              9     665      Z      1     2.31000000000000E+0
2.31000000000000E+0      0.00000000000000E+0      0.00000000000000E+0
0.00000000000000E+0      0.00000000000000E+0
   BmDistLoadG              9     666      Z      1     2.31000000000000E+0
2.31000000000000E+0      0.00000000000000E+0      0.00000000000000E+0
0.00000000000000E+0      0.00000000000000E+0
   BmDistLoadG              9     667      Z      1     2.31000000000000E+0
2.31000000000000E+0      0.00000000000000E+0      0.00000000000000E+0
0.00000000000000E+0      0.00000000000000E+0
   BmDistLoadG              9     668      Z      1     2.31000000000000E+0
2.31000000000000E+0      0.00000000000000E+0      0.00000000000000E+0
0.00000000000000E+0      0.00000000000000E+0

/ ______________________________________________________________________________
/ BEAM GLOBAL DISTRIBUTED LOADS
/ Q03a - Effetti Aerodinamici Convogli Y+
   BmDistLoadG              8      13      Z      1     1.32000000000000E+0
1.32000000000000E+0      0.00000000000000E+0      0.00000000000000E+0
0.00000000000000E+0      0.00000000000000E+0
   BmDistLoadG              8      14      Z      1     2.64000000000000E+0
2.64000000000000E+0      0.00000000000000E+0      0.00000000000000E+0
```

```
0.00000000000000E+0      0.00000000000000E+0
   BmDistLoadG              8      15       Z       1      2.64000000000000E+0
2.64000000000000E+0      0.00000000000000E+0      0.00000000000000E+0
0.00000000000000E+0      0.00000000000000E+0
   BmDistLoadG              8      16       Z       1      2.64000000000000E+0
2.64000000000000E+0      0.00000000000000E+0      0.00000000000000E+0
0.00000000000000E+0      0.00000000000000E+0
   BmDistLoadG              8      17       Z       1      2.64000000000000E+0
2.64000000000000E+0      0.00000000000000E+0      0.00000000000000E+0
0.00000000000000E+0      0.00000000000000E+0
   BmDistLoadG              8      18       Z       1      2.64000000000000E+0
2.64000000000000E+0      0.00000000000000E+0      0.00000000000000E+0
0.00000000000000E+0      0.00000000000000E+0
   BmDistLoadG              8      19       Z       1      2.64000000000000E+0
2.64000000000000E+0      0.00000000000000E+0      0.00000000000000E+0
0.00000000000000E+0      0.00000000000000E+0
   BmDistLoadG              8      20       Z       1      2.64000000000000E+0
2.64000000000000E+0      0.00000000000000E+0      0.00000000000000E+0
0.00000000000000E+0      0.00000000000000E+0
   BmDistLoadG              8      21       Z       1      2.64000000000000E+0
2.64000000000000E+0      0.00000000000000E+0      0.00000000000000E+0
0.00000000000000E+0      0.00000000000000E+0
   BmDistLoadG              8      22       Z       1      1.32000000000000E+0
1.32000000000000E+0      0.00000000000000E+0      0.00000000000000E+0
0.00000000000000E+0      0.00000000000000E+0
   BmDistLoadG              8      69       Y       1      6.00000000000000E-1
6.00000000000000E-1      0.00000000000000E+0      0.00000000000000E+0
0.00000000000000E+0      0.00000000000000E+0
   BmDistLoadG              8      70       Y       1      6.00000000000000E-1
6.00000000000000E-1      0.00000000000000E+0      0.00000000000000E+0
0.00000000000000E+0      0.00000000000000E+0
   BmDistLoadG              8      71       Y       1      6.00000000000000E-1
6.00000000000000E-1      0.00000000000000E+0      0.00000000000000E+0
0.00000000000000E+0      0.00000000000000E+0
   BmDistLoadG              8      72       Y       1      6.00000000000000E-1
6.00000000000000E-1      0.00000000000000E+0      0.00000000000000E+0
0.00000000000000E+0      0.00000000000000E+0
   BmDistLoadG              8      73       Y       1      6.00000000000000E-1
6.00000000000000E-1      0.00000000000000E+0      0.00000000000000E+0
0.00000000000000E+0      0.00000000000000E+0
   BmDistLoadG              8      74       Y       1      1.20000000000000E+0
1.20000000000000E+0      0.00000000000000E+0      0.00000000000000E+0
0.00000000000000E+0      0.00000000000000E+0
   BmDistLoadG              8      75       Y       1      1.20000000000000E+0
1.20000000000000E+0      0.00000000000000E+0      0.00000000000000E+0
0.00000000000000E+0      0.00000000000000E+0
   BmDistLoadG              8      76       Y       1      1.20000000000000E+0
1.20000000000000E+0      0.00000000000000E+0      0.00000000000000E+0
0.00000000000000E+0      0.00000000000000E+0
   BmDistLoadG              8      77       Y       1      1.20000000000000E+0
1.20000000000000E+0      0.00000000000000E+0      0.00000000000000E+0
0.00000000000000E+0      0.00000000000000E+0
   BmDistLoadG              8      78       Y       1      1.20000000000000E+0
1.20000000000000E+0      0.00000000000000E+0      0.00000000000000E+0
```

```
0.00000000000000E+0      0.00000000000000E+0
   BmDistLoadG              8      79      Y      1     1.20000000000000E+0
1.20000000000000E+0      0.00000000000000E+0      0.00000000000000E+0
0.00000000000000E+0      0.00000000000000E+0
   BmDistLoadG              8      80      Y      1     1.20000000000000E+0
1.20000000000000E+0      0.00000000000000E+0      0.00000000000000E+0
0.00000000000000E+0      0.00000000000000E+0
   BmDistLoadG              8      81      Y      1     1.20000000000000E+0
1.20000000000000E+0      0.00000000000000E+0      0.00000000000000E+0
0.00000000000000E+0      0.00000000000000E+0
   BmDistLoadG              8      82      Y      1     1.20000000000000E+0
1.20000000000000E+0      0.00000000000000E+0      0.00000000000000E+0
0.00000000000000E+0      0.00000000000000E+0
   BmDistLoadG              8      83      Y      1     1.20000000000000E+0
1.20000000000000E+0      0.00000000000000E+0      0.00000000000000E+0
0.00000000000000E+0      0.00000000000000E+0
   BmDistLoadG              8      84      Y      1     1.20000000000000E+0
1.20000000000000E+0      0.00000000000000E+0      0.00000000000000E+0
0.00000000000000E+0      0.00000000000000E+0
   BmDistLoadG              8      85      Y      1     1.20000000000000E+0
1.20000000000000E+0      0.00000000000000E+0      0.00000000000000E+0
0.00000000000000E+0      0.00000000000000E+0
   BmDistLoadG              8      86      Y      1     1.20000000000000E+0
1.20000000000000E+0      0.00000000000000E+0      0.00000000000000E+0
0.00000000000000E+0      0.00000000000000E+0
   BmDistLoadG              8      87      Y      1     1.20000000000000E+0
1.20000000000000E+0      0.00000000000000E+0      0.00000000000000E+0
0.00000000000000E+0      0.00000000000000E+0
   BmDistLoadG              8      88      Y      1     1.20000000000000E+0
1.20000000000000E+0      0.00000000000000E+0      0.00000000000000E+0
0.00000000000000E+0      0.00000000000000E+0
   BmDistLoadG              8      89      Y      1     1.20000000000000E+0
1.20000000000000E+0      0.00000000000000E+0      0.00000000000000E+0
0.00000000000000E+0      0.00000000000000E+0
   BmDistLoadG              8      90      Y      1     1.20000000000000E+0
1.20000000000000E+0      0.00000000000000E+0      0.00000000000000E+0
0.00000000000000E+0      0.00000000000000E+0
   BmDistLoadG              8      91      Y      1     1.20000000000000E+0
1.20000000000000E+0      0.00000000000000E+0      0.00000000000000E+0
0.00000000000000E+0      0.00000000000000E+0
   BmDistLoadG              8      92      Y      1     1.20000000000000E+0
1.20000000000000E+0      0.00000000000000E+0      0.00000000000000E+0
0.00000000000000E+0      0.00000000000000E+0
   BmDistLoadG              8      93      Y      1     1.20000000000000E+0
1.20000000000000E+0      0.00000000000000E+0      0.00000000000000E+0
0.00000000000000E+0      0.00000000000000E+0
   BmDistLoadG              8      94      Y      1     1.20000000000000E+0
1.20000000000000E+0      0.00000000000000E+0      0.00000000000000E+0
0.00000000000000E+0      0.00000000000000E+0
   BmDistLoadG              8      95      Y      1     1.20000000000000E+0
1.20000000000000E+0      0.00000000000000E+0      0.00000000000000E+0
0.00000000000000E+0      0.00000000000000E+0
   BmDistLoadG              8      96      Y      1     1.20000000000000E+0
1.20000000000000E+0      0.00000000000000E+0      0.00000000000000E+0
```

```
0.00000000000000E+0      0.00000000000000E+0
   BmDistLoadG              8      97       Y       1     1.20000000000000E+0
1.20000000000000E+0      0.00000000000000E+0      0.00000000000000E+0
0.00000000000000E+0      0.00000000000000E+0
   BmDistLoadG              8      98       Y       1     1.20000000000000E+0
1.20000000000000E+0      0.00000000000000E+0      0.00000000000000E+0
0.00000000000000E+0      0.00000000000000E+0
   BmDistLoadG              8      99       Y       1     1.20000000000000E+0
1.20000000000000E+0      0.00000000000000E+0      0.00000000000000E+0
0.00000000000000E+0      0.00000000000000E+0
   BmDistLoadG              8     100       Y       1     1.20000000000000E+0
1.20000000000000E+0      0.00000000000000E+0      0.00000000000000E+0
0.00000000000000E+0      0.00000000000000E+0
   BmDistLoadG              8     101       Y       1     1.20000000000000E+0
1.20000000000000E+0      0.00000000000000E+0      0.00000000000000E+0
0.00000000000000E+0      0.00000000000000E+0
   BmDistLoadG              8     102       Y       1     1.20000000000000E+0
1.20000000000000E+0      0.00000000000000E+0      0.00000000000000E+0
0.00000000000000E+0      0.00000000000000E+0
   BmDistLoadG              8     103       Y       1     1.20000000000000E+0
1.20000000000000E+0      0.00000000000000E+0      0.00000000000000E+0
0.00000000000000E+0      0.00000000000000E+0
   BmDistLoadG              8     104       Y       1     1.20000000000000E+0
1.20000000000000E+0      0.00000000000000E+0      0.00000000000000E+0
0.00000000000000E+0      0.00000000000000E+0
   BmDistLoadG              8     105       Y       1     1.20000000000000E+0
1.20000000000000E+0      0.00000000000000E+0      0.00000000000000E+0
0.00000000000000E+0      0.00000000000000E+0
   BmDistLoadG              8     106       Y       1     1.20000000000000E+0
1.20000000000000E+0      0.00000000000000E+0      0.00000000000000E+0
0.00000000000000E+0      0.00000000000000E+0
   BmDistLoadG              8     107       Y       1     1.20000000000000E+0
1.20000000000000E+0      0.00000000000000E+0      0.00000000000000E+0
0.00000000000000E+0      0.00000000000000E+0
   BmDistLoadG              8     108       Y       1     1.20000000000000E+0
1.20000000000000E+0      0.00000000000000E+0      0.00000000000000E+0
0.00000000000000E+0      0.00000000000000E+0
   BmDistLoadG              8     109       Y       1     1.20000000000000E+0
1.20000000000000E+0      0.00000000000000E+0      0.00000000000000E+0
0.00000000000000E+0      0.00000000000000E+0
   BmDistLoadG              8     110       Y       1     1.20000000000000E+0
1.20000000000000E+0      0.00000000000000E+0      0.00000000000000E+0
0.00000000000000E+0      0.00000000000000E+0
   BmDistLoadG              8     111       Y       1     1.20000000000000E+0
1.20000000000000E+0      0.00000000000000E+0      0.00000000000000E+0
0.00000000000000E+0      0.00000000000000E+0
   BmDistLoadG              8     112       Y       1     1.20000000000000E+0
1.20000000000000E+0      0.00000000000000E+0      0.00000000000000E+0
0.00000000000000E+0      0.00000000000000E+0
   BmDistLoadG              8     113       Y       1     1.20000000000000E+0
1.20000000000000E+0      0.00000000000000E+0      0.00000000000000E+0
0.00000000000000E+0      0.00000000000000E+0
   BmDistLoadG              8     114       Y       1     6.00000000000000E-1
6.00000000000000E-1      0.00000000000000E+0      0.00000000000000E+0
```

```
0.00000000000000E+0      0.00000000000000E+0
   BmDistLoadG              8     115       Y      1     6.00000000000000E-1
6.00000000000000E-1      0.00000000000000E+0      0.00000000000000E+0
0.00000000000000E+0      0.00000000000000E+0
   BmDistLoadG              8     116       Y      1     6.00000000000000E-1
6.00000000000000E-1      0.00000000000000E+0      0.00000000000000E+0
0.00000000000000E+0      0.00000000000000E+0
   BmDistLoadG              8     117       Y      1     6.00000000000000E-1
6.00000000000000E-1      0.00000000000000E+0      0.00000000000000E+0
0.00000000000000E+0      0.00000000000000E+0
   BmDistLoadG              8     118       Y      1     6.00000000000000E-1
6.00000000000000E-1      0.00000000000000E+0      0.00000000000000E+0
0.00000000000000E+0      0.00000000000000E+0
   BmDistLoadG              8     119       Y      1     6.00000000000000E-1
6.00000000000000E-1      0.00000000000000E+0      0.00000000000000E+0
0.00000000000000E+0      0.00000000000000E+0
   BmDistLoadG              8     120       Y      1     6.00000000000000E-1
6.00000000000000E-1      0.00000000000000E+0      0.00000000000000E+0
0.00000000000000E+0      0.00000000000000E+0
   BmDistLoadG              8     121       Y      1     6.00000000000000E-1
6.00000000000000E-1      0.00000000000000E+0      0.00000000000000E+0
0.00000000000000E+0      0.00000000000000E+0
   BmDistLoadG              8     122       Y      1     6.00000000000000E-1
6.00000000000000E-1      0.00000000000000E+0      0.00000000000000E+0
0.00000000000000E+0      0.00000000000000E+0
   BmDistLoadG              8     123       Y      1     6.00000000000000E-1
6.00000000000000E-1      0.00000000000000E+0      0.00000000000000E+0
0.00000000000000E+0      0.00000000000000E+0
   BmDistLoadG              8     124       Y      1     1.20000000000000E+0
1.20000000000000E+0      0.00000000000000E+0      0.00000000000000E+0
0.00000000000000E+0      0.00000000000000E+0
   BmDistLoadG              8     125       Y      1     1.20000000000000E+0
1.20000000000000E+0      0.00000000000000E+0      0.00000000000000E+0
0.00000000000000E+0      0.00000000000000E+0
   BmDistLoadG              8     126       Y      1     1.20000000000000E+0
1.20000000000000E+0      0.00000000000000E+0      0.00000000000000E+0
0.00000000000000E+0      0.00000000000000E+0
   BmDistLoadG              8     127       Y      1     1.20000000000000E+0
1.20000000000000E+0      0.00000000000000E+0      0.00000000000000E+0
0.00000000000000E+0      0.00000000000000E+0
   BmDistLoadG              8     128       Y      1     1.20000000000000E+0
1.20000000000000E+0      0.00000000000000E+0      0.00000000000000E+0
0.00000000000000E+0      0.00000000000000E+0
   BmDistLoadG              8     129       Y      1     1.20000000000000E+0
1.20000000000000E+0      0.00000000000000E+0      0.00000000000000E+0
0.00000000000000E+0      0.00000000000000E+0
   BmDistLoadG              8     130       Y      1     1.20000000000000E+0
1.20000000000000E+0      0.00000000000000E+0      0.00000000000000E+0
0.00000000000000E+0      0.00000000000000E+0
   BmDistLoadG              8     131       Y      1     1.20000000000000E+0
1.20000000000000E+0      0.00000000000000E+0      0.00000000000000E+0
0.00000000000000E+0      0.00000000000000E+0
   BmDistLoadG              8     132       Y      1     1.20000000000000E+0
1.20000000000000E+0      0.00000000000000E+0      0.00000000000000E+0
```

```
0.00000000000000E+0      0.00000000000000E+0
   BmDistLoadG              8     133       Y      1     1.20000000000000E+0
1.20000000000000E+0      0.00000000000000E+0      0.00000000000000E+0
0.00000000000000E+0      0.00000000000000E+0
   BmDistLoadG              8     134       Y      1     1.20000000000000E+0
1.20000000000000E+0      0.00000000000000E+0      0.00000000000000E+0
0.00000000000000E+0      0.00000000000000E+0
   BmDistLoadG              8     135       Y      1     1.20000000000000E+0
1.20000000000000E+0      0.00000000000000E+0      0.00000000000000E+0
0.00000000000000E+0      0.00000000000000E+0
   BmDistLoadG              8     136       Y      1     1.20000000000000E+0
1.20000000000000E+0      0.00000000000000E+0      0.00000000000000E+0
0.00000000000000E+0      0.00000000000000E+0
   BmDistLoadG              8     137       Y      1     1.20000000000000E+0
1.20000000000000E+0      0.00000000000000E+0      0.00000000000000E+0
0.00000000000000E+0      0.00000000000000E+0
   BmDistLoadG              8     138       Y      1     1.20000000000000E+0
1.20000000000000E+0      0.00000000000000E+0      0.00000000000000E+0
0.00000000000000E+0      0.00000000000000E+0
   BmDistLoadG              8     139       Y      1     1.20000000000000E+0
1.20000000000000E+0      0.00000000000000E+0      0.00000000000000E+0
0.00000000000000E+0      0.00000000000000E+0
   BmDistLoadG              8     140       Y      1     1.20000000000000E+0
1.20000000000000E+0      0.00000000000000E+0      0.00000000000000E+0
0.00000000000000E+0      0.00000000000000E+0
   BmDistLoadG              8     141       Y      1     1.20000000000000E+0
1.20000000000000E+0      0.00000000000000E+0      0.00000000000000E+0
0.00000000000000E+0      0.00000000000000E+0
   BmDistLoadG              8     142       Y      1     1.20000000000000E+0
1.20000000000000E+0      0.00000000000000E+0      0.00000000000000E+0
0.00000000000000E+0      0.00000000000000E+0
   BmDistLoadG              8     143       Y      1     1.20000000000000E+0
1.20000000000000E+0      0.00000000000000E+0      0.00000000000000E+0
0.00000000000000E+0      0.00000000000000E+0
   BmDistLoadG              8     144       Y      1     1.20000000000000E+0
1.20000000000000E+0      0.00000000000000E+0      0.00000000000000E+0
0.00000000000000E+0      0.00000000000000E+0
   BmDistLoadG              8     145       Y      1     1.20000000000000E+0
1.20000000000000E+0      0.00000000000000E+0      0.00000000000000E+0
0.00000000000000E+0      0.00000000000000E+0
   BmDistLoadG              8     146       Y      1     1.20000000000000E+0
1.20000000000000E+0      0.00000000000000E+0      0.00000000000000E+0
0.00000000000000E+0      0.00000000000000E+0
   BmDistLoadG              8     147       Y      1     1.20000000000000E+0
1.20000000000000E+0      0.00000000000000E+0      0.00000000000000E+0
0.00000000000000E+0      0.00000000000000E+0
   BmDistLoadG              8     148       Y      1     1.20000000000000E+0
1.20000000000000E+0      0.00000000000000E+0      0.00000000000000E+0
0.00000000000000E+0      0.00000000000000E+0
   BmDistLoadG              8     149       Y      1     1.20000000000000E+0
1.20000000000000E+0      0.00000000000000E+0      0.00000000000000E+0
0.00000000000000E+0      0.00000000000000E+0
   BmDistLoadG              8     150       Y      1     1.20000000000000E+0
1.20000000000000E+0      0.00000000000000E+0      0.00000000000000E+0
```

```
0.00000000000000E+0      0.00000000000000E+0
   BmDistLoadG              8     151       Y        1     1.20000000000000E+0
1.20000000000000E+0      0.00000000000000E+0      0.00000000000000E+0
0.00000000000000E+0      0.00000000000000E+0
   BmDistLoadG              8     152       Y        1     1.20000000000000E+0
1.20000000000000E+0      0.00000000000000E+0      0.00000000000000E+0
0.00000000000000E+0      0.00000000000000E+0
   BmDistLoadG              8     153       Y        1     1.20000000000000E+0
1.20000000000000E+0      0.00000000000000E+0      0.00000000000000E+0
0.00000000000000E+0      0.00000000000000E+0
   BmDistLoadG              8     154       Y        1     1.20000000000000E+0
1.20000000000000E+0      0.00000000000000E+0      0.00000000000000E+0
0.00000000000000E+0      0.00000000000000E+0
   BmDistLoadG              8     155       Y        1     1.20000000000000E+0
1.20000000000000E+0      0.00000000000000E+0      0.00000000000000E+0
0.00000000000000E+0      0.00000000000000E+0
   BmDistLoadG              8     156       Y        1     1.20000000000000E+0
1.20000000000000E+0      0.00000000000000E+0      0.00000000000000E+0
0.00000000000000E+0      0.00000000000000E+0
   BmDistLoadG              8     157       Y        1     1.20000000000000E+0
1.20000000000000E+0      0.00000000000000E+0      0.00000000000000E+0
0.00000000000000E+0      0.00000000000000E+0
   BmDistLoadG              8     158       Y        1     1.20000000000000E+0
1.20000000000000E+0      0.00000000000000E+0      0.00000000000000E+0
0.00000000000000E+0      0.00000000000000E+0
   BmDistLoadG              8     159       Y        1     6.00000000000000E-1
6.00000000000000E-1      0.00000000000000E+0      0.00000000000000E+0
0.00000000000000E+0      0.00000000000000E+0
   BmDistLoadG              8     160       Y        1     6.00000000000000E-1
6.00000000000000E-1      0.00000000000000E+0      0.00000000000000E+0
0.00000000000000E+0      0.00000000000000E+0
   BmDistLoadG              8     161       Y        1     6.00000000000000E-1
6.00000000000000E-1      0.00000000000000E+0      0.00000000000000E+0
0.00000000000000E+0      0.00000000000000E+0
   BmDistLoadG              8     162       Y        1     6.00000000000000E-1
6.00000000000000E-1      0.00000000000000E+0      0.00000000000000E+0
0.00000000000000E+0      0.00000000000000E+0
   BmDistLoadG              8     163       Y        1     6.00000000000000E-1
6.00000000000000E-1      0.00000000000000E+0      0.00000000000000E+0
0.00000000000000E+0      0.00000000000000E+0
   BmDistLoadG              8     164       Z        1     1.32000000000000E+0
1.32000000000000E+0      0.00000000000000E+0      0.00000000000000E+0
0.00000000000000E+0      0.00000000000000E+0
   BmDistLoadG              8     165       Z        1     1.32000000000000E+0
1.32000000000000E+0      0.00000000000000E+0      0.00000000000000E+0
0.00000000000000E+0      0.00000000000000E+0
   BmDistLoadG              8     166       Z        1     1.32000000000000E+0
1.32000000000000E+0      0.00000000000000E+0      0.00000000000000E+0
0.00000000000000E+0      0.00000000000000E+0
   BmDistLoadG              8     167       Z        1     1.32000000000000E+0
1.32000000000000E+0      0.00000000000000E+0      0.00000000000000E+0
0.00000000000000E+0      0.00000000000000E+0
   BmDistLoadG              8     168       Z        1     1.32000000000000E+0
1.32000000000000E+0      0.00000000000000E+0      0.00000000000000E+0
```

```
0.00000000000000E+0      0.00000000000000E+0
   BmDistLoadG              8     169        Z      1     1.32000000000000E+0
1.32000000000000E+0      0.00000000000000E+0      0.00000000000000E+0
0.00000000000000E+0      0.00000000000000E+0
   BmDistLoadG              8     170        Z      1     1.32000000000000E+0
1.32000000000000E+0      0.00000000000000E+0      0.00000000000000E+0
0.00000000000000E+0      0.00000000000000E+0
   BmDistLoadG              8     171        Z      1     1.32000000000000E+0
1.32000000000000E+0      0.00000000000000E+0      0.00000000000000E+0
0.00000000000000E+0      0.00000000000000E+0
   BmDistLoadG              8     172        Z      1     1.32000000000000E+0
1.32000000000000E+0      0.00000000000000E+0      0.00000000000000E+0
0.00000000000000E+0      0.00000000000000E+0
   BmDistLoadG              8     173        Z      1     1.32000000000000E+0
1.32000000000000E+0      0.00000000000000E+0      0.00000000000000E+0
0.00000000000000E+0      0.00000000000000E+0
   BmDistLoadG              8     174        Z      1     1.32000000000000E+0
1.32000000000000E+0      0.00000000000000E+0      0.00000000000000E+0
0.00000000000000E+0      0.00000000000000E+0
   BmDistLoadG              8     175        Z      1     1.32000000000000E+0
1.32000000000000E+0      0.00000000000000E+0      0.00000000000000E+0
0.00000000000000E+0      0.00000000000000E+0
   BmDistLoadG              8     176        Z      1     1.32000000000000E+0
1.32000000000000E+0      0.00000000000000E+0      0.00000000000000E+0
0.00000000000000E+0      0.00000000000000E+0
   BmDistLoadG              8     177        Z      1     1.32000000000000E+0
1.32000000000000E+0      0.00000000000000E+0      0.00000000000000E+0
0.00000000000000E+0      0.00000000000000E+0
   BmDistLoadG              8     178        Z      1     1.32000000000000E+0
1.32000000000000E+0      0.00000000000000E+0      0.00000000000000E+0
0.00000000000000E+0      0.00000000000000E+0
   BmDistLoadG              8     179        Z      1     1.32000000000000E+0
1.32000000000000E+0      0.00000000000000E+0      0.00000000000000E+0
0.00000000000000E+0      0.00000000000000E+0
   BmDistLoadG              8     180        Z      1     1.32000000000000E+0
1.32000000000000E+0      0.00000000000000E+0      0.00000000000000E+0
0.00000000000000E+0      0.00000000000000E+0
   BmDistLoadG              8     181        Z      1     1.32000000000000E+0
1.32000000000000E+0      0.00000000000000E+0      0.00000000000000E+0
0.00000000000000E+0      0.00000000000000E+0
   BmDistLoadG              8     182        Z      1     1.32000000000000E+0
1.32000000000000E+0      0.00000000000000E+0      0.00000000000000E+0
0.00000000000000E+0      0.00000000000000E+0
   BmDistLoadG              8     183        Z      1     1.32000000000000E+0
1.32000000000000E+0      0.00000000000000E+0      0.00000000000000E+0
0.00000000000000E+0      0.00000000000000E+0
   BmDistLoadG              8     184        Z      1     1.32000000000000E+0
1.32000000000000E+0      0.00000000000000E+0      0.00000000000000E+0
0.00000000000000E+0      0.00000000000000E+0
   BmDistLoadG              8     185        Z      1     1.32000000000000E+0
1.32000000000000E+0      0.00000000000000E+0      0.00000000000000E+0
0.00000000000000E+0      0.00000000000000E+0
   BmDistLoadG              8     186        Z      1     1.32000000000000E+0
1.32000000000000E+0      0.00000000000000E+0      0.00000000000000E+0
```

```
0.00000000000000E+0      0.00000000000000E+0
   BmDistLoadG              8     187      Z      1     1.32000000000000E+0
1.32000000000000E+0      0.00000000000000E+0      0.00000000000000E+0
0.00000000000000E+0      0.00000000000000E+0
   BmDistLoadG              8     188      Z      1     1.32000000000000E+0
1.32000000000000E+0      0.00000000000000E+0      0.00000000000000E+0
0.00000000000000E+0      0.00000000000000E+0
   BmDistLoadG              8     189      Z      1     1.32000000000000E+0
1.32000000000000E+0      0.00000000000000E+0      0.00000000000000E+0
0.00000000000000E+0      0.00000000000000E+0
   BmDistLoadG              8     190      Z      1     1.32000000000000E+0
1.32000000000000E+0      0.00000000000000E+0      0.00000000000000E+0
0.00000000000000E+0      0.00000000000000E+0
   BmDistLoadG              8     191      Z      1     1.32000000000000E+0
1.32000000000000E+0      0.00000000000000E+0      0.00000000000000E+0
0.00000000000000E+0      0.00000000000000E+0
   BmDistLoadG              8     192      Z      1     1.32000000000000E+0
1.32000000000000E+0      0.00000000000000E+0      0.00000000000000E+0
0.00000000000000E+0      0.00000000000000E+0
   BmDistLoadG              8     193      Z      1     1.32000000000000E+0
1.32000000000000E+0      0.00000000000000E+0      0.00000000000000E+0
0.00000000000000E+0      0.00000000000000E+0
   BmDistLoadG              8     194      Z      1     1.32000000000000E+0
1.32000000000000E+0      0.00000000000000E+0      0.00000000000000E+0
0.00000000000000E+0      0.00000000000000E+0
   BmDistLoadG              8     195      Z      1     1.32000000000000E+0
1.32000000000000E+0      0.00000000000000E+0      0.00000000000000E+0
0.00000000000000E+0      0.00000000000000E+0
   BmDistLoadG              8     196      Z      1     1.32000000000000E+0
1.32000000000000E+0      0.00000000000000E+0      0.00000000000000E+0
0.00000000000000E+0      0.00000000000000E+0
   BmDistLoadG              8     197      Z      1     1.32000000000000E+0
1.32000000000000E+0      0.00000000000000E+0      0.00000000000000E+0
0.00000000000000E+0      0.00000000000000E+0
   BmDistLoadG              8     198      Z      1     1.32000000000000E+0
1.32000000000000E+0      0.00000000000000E+0      0.00000000000000E+0
0.00000000000000E+0      0.00000000000000E+0
   BmDistLoadG              8     199      Z      1     1.32000000000000E+0
1.32000000000000E+0      0.00000000000000E+0      0.00000000000000E+0
0.00000000000000E+0      0.00000000000000E+0
   BmDistLoadG              8     200      Z      1     1.32000000000000E+0
1.32000000000000E+0      0.00000000000000E+0      0.00000000000000E+0
0.00000000000000E+0      0.00000000000000E+0
   BmDistLoadG              8     201      Z      1     1.32000000000000E+0
1.32000000000000E+0      0.00000000000000E+0      0.00000000000000E+0
0.00000000000000E+0      0.00000000000000E+0
   BmDistLoadG              8     202      Z      1     1.32000000000000E+0
1.32000000000000E+0      0.00000000000000E+0      0.00000000000000E+0
0.00000000000000E+0      0.00000000000000E+0
   BmDistLoadG              8     203      Z      1     1.32000000000000E+0
1.32000000000000E+0      0.00000000000000E+0      0.00000000000000E+0
0.00000000000000E+0      0.00000000000000E+0
   BmDistLoadG              8     204      Z      1     1.32000000000000E+0
1.32000000000000E+0      0.00000000000000E+0      0.00000000000000E+0
```

```
0.00000000000000E+0      0.00000000000000E+0
   BmDistLoadG              8     205      Z      1     1.32000000000000E+0
1.32000000000000E+0      0.00000000000000E+0      0.00000000000000E+0
0.00000000000000E+0      0.00000000000000E+0
   BmDistLoadG              8     206      Z      1     1.32000000000000E+0
1.32000000000000E+0      0.00000000000000E+0      0.00000000000000E+0
0.00000000000000E+0      0.00000000000000E+0
   BmDistLoadG              8     207      Z      1     1.32000000000000E+0
1.32000000000000E+0      0.00000000000000E+0      0.00000000000000E+0
0.00000000000000E+0      0.00000000000000E+0
   BmDistLoadG              8     208      Z      1     1.32000000000000E+0
1.32000000000000E+0      0.00000000000000E+0      0.00000000000000E+0
0.00000000000000E+0      0.00000000000000E+0
   BmDistLoadG              8     209      Z      1     1.32000000000000E+0
1.32000000000000E+0      0.00000000000000E+0      0.00000000000000E+0
0.00000000000000E+0      0.00000000000000E+0
   BmDistLoadG              8     210      Z      1     1.32000000000000E+0
1.32000000000000E+0      0.00000000000000E+0      0.00000000000000E+0
0.00000000000000E+0      0.00000000000000E+0
   BmDistLoadG              8     211      Z      1     1.32000000000000E+0
1.32000000000000E+0      0.00000000000000E+0      0.00000000000000E+0
0.00000000000000E+0      0.00000000000000E+0
   BmDistLoadG              8     212      Z      1     1.32000000000000E+0
1.32000000000000E+0      0.00000000000000E+0      0.00000000000000E+0
0.00000000000000E+0      0.00000000000000E+0
   BmDistLoadG              8     213      Z      1     1.32000000000000E+0
1.32000000000000E+0      0.00000000000000E+0      0.00000000000000E+0
0.00000000000000E+0      0.00000000000000E+0
   BmDistLoadG              8     214      Z      1     1.32000000000000E+0
1.32000000000000E+0      0.00000000000000E+0      0.00000000000000E+0
0.00000000000000E+0      0.00000000000000E+0
   BmDistLoadG              8     215      Z      1     1.32000000000000E+0
1.32000000000000E+0      0.00000000000000E+0      0.00000000000000E+0
0.00000000000000E+0      0.00000000000000E+0
   BmDistLoadG              8     216      Z      1     1.32000000000000E+0
1.32000000000000E+0      0.00000000000000E+0      0.00000000000000E+0
0.00000000000000E+0      0.00000000000000E+0
   BmDistLoadG              8     217      Z      1     1.32000000000000E+0
1.32000000000000E+0      0.00000000000000E+0      0.00000000000000E+0
0.00000000000000E+0      0.00000000000000E+0
   BmDistLoadG              8     218      Z      1     2.64000000000000E+0
2.64000000000000E+0      0.00000000000000E+0      0.00000000000000E+0
0.00000000000000E+0      0.00000000000000E+0
   BmDistLoadG              8     219      Z      1     2.64000000000000E+0
2.64000000000000E+0      0.00000000000000E+0      0.00000000000000E+0
0.00000000000000E+0      0.00000000000000E+0
   BmDistLoadG              8     220      Z      1     2.64000000000000E+0
2.64000000000000E+0      0.00000000000000E+0      0.00000000000000E+0
0.00000000000000E+0      0.00000000000000E+0
   BmDistLoadG              8     221      Z      1     2.64000000000000E+0
2.64000000000000E+0      0.00000000000000E+0      0.00000000000000E+0
0.00000000000000E+0      0.00000000000000E+0
   BmDistLoadG              8     222      Z      1     2.64000000000000E+0
2.64000000000000E+0      0.00000000000000E+0      0.00000000000000E+0
```

```
0.00000000000000E+0      0.00000000000000E+0
   BmDistLoadG              8     223       Z       1     2.64000000000000E+0
2.64000000000000E+0      0.00000000000000E+0      0.00000000000000E+0
0.00000000000000E+0      0.00000000000000E+0
   BmDistLoadG              8     224       Z       1     2.64000000000000E+0
2.64000000000000E+0      0.00000000000000E+0      0.00000000000000E+0
0.00000000000000E+0      0.00000000000000E+0
   BmDistLoadG              8     225       Z       1     2.64000000000000E+0
2.64000000000000E+0      0.00000000000000E+0      0.00000000000000E+0
0.00000000000000E+0      0.00000000000000E+0
   BmDistLoadG              8     226       Z       1     2.64000000000000E+0
2.64000000000000E+0      0.00000000000000E+0      0.00000000000000E+0
0.00000000000000E+0      0.00000000000000E+0
   BmDistLoadG              8     227       Z       1     2.64000000000000E+0
2.64000000000000E+0      0.00000000000000E+0      0.00000000000000E+0
0.00000000000000E+0      0.00000000000000E+0
   BmDistLoadG              8     228       Z       1     2.64000000000000E+0
2.64000000000000E+0      0.00000000000000E+0      0.00000000000000E+0
0.00000000000000E+0      0.00000000000000E+0
   BmDistLoadG              8     229       Z       1     2.64000000000000E+0
2.64000000000000E+0      0.00000000000000E+0      0.00000000000000E+0
0.00000000000000E+0      0.00000000000000E+0
   BmDistLoadG              8     230       Z       1     2.64000000000000E+0
2.64000000000000E+0      0.00000000000000E+0      0.00000000000000E+0
0.00000000000000E+0      0.00000000000000E+0
   BmDistLoadG              8     231       Z       1     2.64000000000000E+0
2.64000000000000E+0      0.00000000000000E+0      0.00000000000000E+0
0.00000000000000E+0      0.00000000000000E+0
   BmDistLoadG              8     232       Z       1     2.64000000000000E+0
2.64000000000000E+0      0.00000000000000E+0      0.00000000000000E+0
0.00000000000000E+0      0.00000000000000E+0
   BmDistLoadG              8     233       Z       1     2.64000000000000E+0
2.64000000000000E+0      0.00000000000000E+0      0.00000000000000E+0
0.00000000000000E+0      0.00000000000000E+0
   BmDistLoadG              8     234       Z       1     2.64000000000000E+0
2.64000000000000E+0      0.00000000000000E+0      0.00000000000000E+0
0.00000000000000E+0      0.00000000000000E+0
   BmDistLoadG              8     235       Z       1     2.64000000000000E+0
2.64000000000000E+0      0.00000000000000E+0      0.00000000000000E+0
0.00000000000000E+0      0.00000000000000E+0
   BmDistLoadG              8     236       Z       1     2.64000000000000E+0
2.64000000000000E+0      0.00000000000000E+0      0.00000000000000E+0
0.00000000000000E+0      0.00000000000000E+0
   BmDistLoadG              8     237       Z       1     2.64000000000000E+0
2.64000000000000E+0      0.00000000000000E+0      0.00000000000000E+0
0.00000000000000E+0      0.00000000000000E+0
   BmDistLoadG              8     238       Z       1     2.64000000000000E+0
2.64000000000000E+0      0.00000000000000E+0      0.00000000000000E+0
0.00000000000000E+0      0.00000000000000E+0
   BmDistLoadG              8     239       Z       1     2.64000000000000E+0
2.64000000000000E+0      0.00000000000000E+0      0.00000000000000E+0
0.00000000000000E+0      0.00000000000000E+0
   BmDistLoadG              8     240       Z       1     2.64000000000000E+0
2.64000000000000E+0      0.00000000000000E+0      0.00000000000000E+0
```

```
0.00000000000000E+0      0.00000000000000E+0
   BmDistLoadG              8     241        Z      1     2.64000000000000E+0
2.64000000000000E+0      0.00000000000000E+0      0.00000000000000E+0
0.00000000000000E+0      0.00000000000000E+0
   BmDistLoadG              8     242        Z      1     2.64000000000000E+0
2.64000000000000E+0      0.00000000000000E+0      0.00000000000000E+0
0.00000000000000E+0      0.00000000000000E+0
   BmDistLoadG              8     243        Z      1     2.64000000000000E+0
2.64000000000000E+0      0.00000000000000E+0      0.00000000000000E+0
0.00000000000000E+0      0.00000000000000E+0
   BmDistLoadG              8     244        Z      1     2.64000000000000E+0
2.64000000000000E+0      0.00000000000000E+0      0.00000000000000E+0
0.00000000000000E+0      0.00000000000000E+0
   BmDistLoadG              8     245        Z      1     2.64000000000000E+0
2.64000000000000E+0      0.00000000000000E+0      0.00000000000000E+0
0.00000000000000E+0      0.00000000000000E+0
   BmDistLoadG              8     246        Z      1     2.64000000000000E+0
2.64000000000000E+0      0.00000000000000E+0      0.00000000000000E+0
0.00000000000000E+0      0.00000000000000E+0
   BmDistLoadG              8     247        Z      1     2.64000000000000E+0
2.64000000000000E+0      0.00000000000000E+0      0.00000000000000E+0
0.00000000000000E+0      0.00000000000000E+0
   BmDistLoadG              8     248        Z      1     2.64000000000000E+0
2.64000000000000E+0      0.00000000000000E+0      0.00000000000000E+0
0.00000000000000E+0      0.00000000000000E+0
   BmDistLoadG              8     249        Z      1     2.64000000000000E+0
2.64000000000000E+0      0.00000000000000E+0      0.00000000000000E+0
0.00000000000000E+0      0.00000000000000E+0
   BmDistLoadG              8     250        Z      1     2.64000000000000E+0
2.64000000000000E+0      0.00000000000000E+0      0.00000000000000E+0
0.00000000000000E+0      0.00000000000000E+0
   BmDistLoadG              8     251        Z      1     2.64000000000000E+0
2.64000000000000E+0      0.00000000000000E+0      0.00000000000000E+0
0.00000000000000E+0      0.00000000000000E+0
   BmDistLoadG              8     252        Z      1     2.64000000000000E+0
2.64000000000000E+0      0.00000000000000E+0      0.00000000000000E+0
0.00000000000000E+0      0.00000000000000E+0
   BmDistLoadG              8     253        Z      1     2.64000000000000E+0
2.64000000000000E+0      0.00000000000000E+0      0.00000000000000E+0
0.00000000000000E+0      0.00000000000000E+0
   BmDistLoadG              8     254        Z      1     2.64000000000000E+0
2.64000000000000E+0      0.00000000000000E+0      0.00000000000000E+0
0.00000000000000E+0      0.00000000000000E+0
   BmDistLoadG              8     255        Z      1     2.64000000000000E+0
2.64000000000000E+0      0.00000000000000E+0      0.00000000000000E+0
0.00000000000000E+0      0.00000000000000E+0
   BmDistLoadG              8     256        Z      1     2.64000000000000E+0
2.64000000000000E+0      0.00000000000000E+0      0.00000000000000E+0
0.00000000000000E+0      0.00000000000000E+0
   BmDistLoadG              8     257        Z      1     2.64000000000000E+0
2.64000000000000E+0      0.00000000000000E+0      0.00000000000000E+0
0.00000000000000E+0      0.00000000000000E+0
   BmDistLoadG              8     258        Z      1     2.64000000000000E+0
2.64000000000000E+0      0.00000000000000E+0      0.00000000000000E+0
```

```
0.00000000000000E+0       0.00000000000000E+0
   BmDistLoadG               8      259       Z       1      2.64000000000000E+0
2.64000000000000E+0       0.00000000000000E+0       0.00000000000000E+0
0.00000000000000E+0       0.00000000000000E+0
   BmDistLoadG               8      260       Z       1      2.64000000000000E+0
2.64000000000000E+0       0.00000000000000E+0       0.00000000000000E+0
0.00000000000000E+0       0.00000000000000E+0
   BmDistLoadG               8      261       Z       1      2.64000000000000E+0
2.64000000000000E+0       0.00000000000000E+0       0.00000000000000E+0
0.00000000000000E+0       0.00000000000000E+0
   BmDistLoadG               8      262       Z       1      2.64000000000000E+0
2.64000000000000E+0       0.00000000000000E+0       0.00000000000000E+0
0.00000000000000E+0       0.00000000000000E+0
   BmDistLoadG               8      263       Z       1      2.64000000000000E+0
2.64000000000000E+0       0.00000000000000E+0       0.00000000000000E+0
0.00000000000000E+0       0.00000000000000E+0
   BmDistLoadG               8      264       Z       1      2.64000000000000E+0
2.64000000000000E+0       0.00000000000000E+0       0.00000000000000E+0
0.00000000000000E+0       0.00000000000000E+0
   BmDistLoadG               8      265       Z       1      2.64000000000000E+0
2.64000000000000E+0       0.00000000000000E+0       0.00000000000000E+0
0.00000000000000E+0       0.00000000000000E+0
   BmDistLoadG               8      266       Z       1      2.64000000000000E+0
2.64000000000000E+0       0.00000000000000E+0       0.00000000000000E+0
0.00000000000000E+0       0.00000000000000E+0
   BmDistLoadG               8      267       Z       1      2.64000000000000E+0
2.64000000000000E+0       0.00000000000000E+0       0.00000000000000E+0
0.00000000000000E+0       0.00000000000000E+0
   BmDistLoadG               8      268       Z       1      2.64000000000000E+0
2.64000000000000E+0       0.00000000000000E+0       0.00000000000000E+0
0.00000000000000E+0       0.00000000000000E+0
   BmDistLoadG               8      269       Z       1      2.64000000000000E+0
2.64000000000000E+0       0.00000000000000E+0       0.00000000000000E+0
0.00000000000000E+0       0.00000000000000E+0
   BmDistLoadG               8      270       Z       1      2.64000000000000E+0
2.64000000000000E+0       0.00000000000000E+0       0.00000000000000E+0
0.00000000000000E+0       0.00000000000000E+0
   BmDistLoadG               8      271       Z       1      2.64000000000000E+0
2.64000000000000E+0       0.00000000000000E+0       0.00000000000000E+0
0.00000000000000E+0       0.00000000000000E+0
   BmDistLoadG               8      272       Z       1      2.64000000000000E+0
2.64000000000000E+0       0.00000000000000E+0       0.00000000000000E+0
0.00000000000000E+0       0.00000000000000E+0
   BmDistLoadG               8      273       Z       1      2.64000000000000E+0
2.64000000000000E+0       0.00000000000000E+0       0.00000000000000E+0
0.00000000000000E+0       0.00000000000000E+0
   BmDistLoadG               8      274       Z       1      2.64000000000000E+0
2.64000000000000E+0       0.00000000000000E+0       0.00000000000000E+0
0.00000000000000E+0       0.00000000000000E+0
   BmDistLoadG               8      275       Z       1      2.64000000000000E+0
2.64000000000000E+0       0.00000000000000E+0       0.00000000000000E+0
0.00000000000000E+0       0.00000000000000E+0
   BmDistLoadG               8      276       Z       1      2.64000000000000E+0
2.64000000000000E+0       0.00000000000000E+0       0.00000000000000E+0
```

```
0.00000000000000E+0     0.00000000000000E+0
   BmDistLoadG             8     277       Z      1     2.64000000000000E+0
2.64000000000000E+0     0.00000000000000E+0     0.00000000000000E+0
0.00000000000000E+0     0.00000000000000E+0
   BmDistLoadG             8     278       Z      1     2.64000000000000E+0
2.64000000000000E+0     0.00000000000000E+0     0.00000000000000E+0
0.00000000000000E+0     0.00000000000000E+0
   BmDistLoadG             8     279       Z      1     2.64000000000000E+0
2.64000000000000E+0     0.00000000000000E+0     0.00000000000000E+0
0.00000000000000E+0     0.00000000000000E+0
   BmDistLoadG             8     280       Z      1     2.64000000000000E+0
2.64000000000000E+0     0.00000000000000E+0     0.00000000000000E+0
0.00000000000000E+0     0.00000000000000E+0
   BmDistLoadG             8     281       Z      1     2.64000000000000E+0
2.64000000000000E+0     0.00000000000000E+0     0.00000000000000E+0
0.00000000000000E+0     0.00000000000000E+0
   BmDistLoadG             8     282       Z      1     2.64000000000000E+0
2.64000000000000E+0     0.00000000000000E+0     0.00000000000000E+0
0.00000000000000E+0     0.00000000000000E+0
   BmDistLoadG             8     283       Z      1     2.64000000000000E+0
2.64000000000000E+0     0.00000000000000E+0     0.00000000000000E+0
0.00000000000000E+0     0.00000000000000E+0
   BmDistLoadG             8     284       Z      1     2.64000000000000E+0
2.64000000000000E+0     0.00000000000000E+0     0.00000000000000E+0
0.00000000000000E+0     0.00000000000000E+0
   BmDistLoadG             8     285       Z      1     2.64000000000000E+0
2.64000000000000E+0     0.00000000000000E+0     0.00000000000000E+0
0.00000000000000E+0     0.00000000000000E+0
   BmDistLoadG             8     286       Z      1     2.64000000000000E+0
2.64000000000000E+0     0.00000000000000E+0     0.00000000000000E+0
0.00000000000000E+0     0.00000000000000E+0
   BmDistLoadG             8     287       Z      1     2.64000000000000E+0
2.64000000000000E+0     0.00000000000000E+0     0.00000000000000E+0
0.00000000000000E+0     0.00000000000000E+0
   BmDistLoadG             8     288       Z      1     2.64000000000000E+0
2.64000000000000E+0     0.00000000000000E+0     0.00000000000000E+0
0.00000000000000E+0     0.00000000000000E+0
   BmDistLoadG             8     289       Z      1     2.64000000000000E+0
2.64000000000000E+0     0.00000000000000E+0     0.00000000000000E+0
0.00000000000000E+0     0.00000000000000E+0
   BmDistLoadG             8     290       Z      1     2.64000000000000E+0
2.64000000000000E+0     0.00000000000000E+0     0.00000000000000E+0
0.00000000000000E+0     0.00000000000000E+0
   BmDistLoadG             8     291       Z      1     2.64000000000000E+0
2.64000000000000E+0     0.00000000000000E+0     0.00000000000000E+0
0.00000000000000E+0     0.00000000000000E+0
   BmDistLoadG             8     292       Z      1     2.64000000000000E+0
2.64000000000000E+0     0.00000000000000E+0     0.00000000000000E+0
0.00000000000000E+0     0.00000000000000E+0
   BmDistLoadG             8     293       Z      1     2.64000000000000E+0
2.64000000000000E+0     0.00000000000000E+0     0.00000000000000E+0
0.00000000000000E+0     0.00000000000000E+0
   BmDistLoadG             8     294       Z      1     2.64000000000000E+0
2.64000000000000E+0     0.00000000000000E+0     0.00000000000000E+0
```

```
0.00000000000000E+0      0.00000000000000E+0
   BmDistLoadG              8     295       Z        1     2.64000000000000E+0
2.64000000000000E+0      0.00000000000000E+0      0.00000000000000E+0
0.00000000000000E+0      0.00000000000000E+0
   BmDistLoadG              8     296       Z        1     2.64000000000000E+0
2.64000000000000E+0      0.00000000000000E+0      0.00000000000000E+0
0.00000000000000E+0      0.00000000000000E+0
   BmDistLoadG              8     297       Z        1     2.64000000000000E+0
2.64000000000000E+0      0.00000000000000E+0      0.00000000000000E+0
0.00000000000000E+0      0.00000000000000E+0
   BmDistLoadG              8     298       Z        1     2.64000000000000E+0
2.64000000000000E+0      0.00000000000000E+0      0.00000000000000E+0
0.00000000000000E+0      0.00000000000000E+0
   BmDistLoadG              8     299       Z        1     2.64000000000000E+0
2.64000000000000E+0      0.00000000000000E+0      0.00000000000000E+0
0.00000000000000E+0      0.00000000000000E+0
   BmDistLoadG              8     300       Z        1     2.64000000000000E+0
2.64000000000000E+0      0.00000000000000E+0      0.00000000000000E+0
0.00000000000000E+0      0.00000000000000E+0
   BmDistLoadG              8     301       Z        1     2.64000000000000E+0
2.64000000000000E+0      0.00000000000000E+0      0.00000000000000E+0
0.00000000000000E+0      0.00000000000000E+0
   BmDistLoadG              8     302       Z        1     2.64000000000000E+0
2.64000000000000E+0      0.00000000000000E+0      0.00000000000000E+0
0.00000000000000E+0      0.00000000000000E+0
   BmDistLoadG              8     303       Z        1     2.64000000000000E+0
2.64000000000000E+0      0.00000000000000E+0      0.00000000000000E+0
0.00000000000000E+0      0.00000000000000E+0
   BmDistLoadG              8     304       Z        1     2.64000000000000E+0
2.64000000000000E+0      0.00000000000000E+0      0.00000000000000E+0
0.00000000000000E+0      0.00000000000000E+0
   BmDistLoadG              8     305       Z        1     2.64000000000000E+0
2.64000000000000E+0      0.00000000000000E+0      0.00000000000000E+0
0.00000000000000E+0      0.00000000000000E+0
   BmDistLoadG              8     306       Z        1     2.64000000000000E+0
2.64000000000000E+0      0.00000000000000E+0      0.00000000000000E+0
0.00000000000000E+0      0.00000000000000E+0
   BmDistLoadG              8     307       Z        1     2.64000000000000E+0
2.64000000000000E+0      0.00000000000000E+0      0.00000000000000E+0
0.00000000000000E+0      0.00000000000000E+0
   BmDistLoadG              8     308       Z        1     2.64000000000000E+0
2.64000000000000E+0      0.00000000000000E+0      0.00000000000000E+0
0.00000000000000E+0      0.00000000000000E+0
   BmDistLoadG              8     309       Z        1     2.64000000000000E+0
2.64000000000000E+0      0.00000000000000E+0      0.00000000000000E+0
0.00000000000000E+0      0.00000000000000E+0
   BmDistLoadG              8     310       Z        1     2.64000000000000E+0
2.64000000000000E+0      0.00000000000000E+0      0.00000000000000E+0
0.00000000000000E+0      0.00000000000000E+0
   BmDistLoadG              8     311       Z        1     2.64000000000000E+0
2.64000000000000E+0      0.00000000000000E+0      0.00000000000000E+0
0.00000000000000E+0      0.00000000000000E+0
   BmDistLoadG              8     312       Z        1     2.64000000000000E+0
2.64000000000000E+0      0.00000000000000E+0      0.00000000000000E+0
```

```
0.00000000000000E+0      0.00000000000000E+0
   BmDistLoadG              8     313      Z      1     2.64000000000000E+0
2.64000000000000E+0      0.00000000000000E+0      0.00000000000000E+0
0.00000000000000E+0      0.00000000000000E+0
   BmDistLoadG              8     314      Z      1     2.64000000000000E+0
2.64000000000000E+0      0.00000000000000E+0      0.00000000000000E+0
0.00000000000000E+0      0.00000000000000E+0
   BmDistLoadG              8     315      Z      1     2.64000000000000E+0
2.64000000000000E+0      0.00000000000000E+0      0.00000000000000E+0
0.00000000000000E+0      0.00000000000000E+0
   BmDistLoadG              8     316      Z      1     2.64000000000000E+0
2.64000000000000E+0      0.00000000000000E+0      0.00000000000000E+0
0.00000000000000E+0      0.00000000000000E+0
   BmDistLoadG              8     317      Z      1     2.64000000000000E+0
2.64000000000000E+0      0.00000000000000E+0      0.00000000000000E+0
0.00000000000000E+0      0.00000000000000E+0
   BmDistLoadG              8     318      Z      1     2.64000000000000E+0
2.64000000000000E+0      0.00000000000000E+0      0.00000000000000E+0
0.00000000000000E+0      0.00000000000000E+0
   BmDistLoadG              8     319      Z      1     2.64000000000000E+0
2.64000000000000E+0      0.00000000000000E+0      0.00000000000000E+0
0.00000000000000E+0      0.00000000000000E+0
   BmDistLoadG              8     320      Z      1     2.64000000000000E+0
2.64000000000000E+0      0.00000000000000E+0      0.00000000000000E+0
0.00000000000000E+0      0.00000000000000E+0
   BmDistLoadG              8     321      Z      1     2.64000000000000E+0
2.64000000000000E+0      0.00000000000000E+0      0.00000000000000E+0
0.00000000000000E+0      0.00000000000000E+0
   BmDistLoadG              8     322      Z      1     2.64000000000000E+0
2.64000000000000E+0      0.00000000000000E+0      0.00000000000000E+0
0.00000000000000E+0      0.00000000000000E+0
   BmDistLoadG              8     323      Z      1     2.64000000000000E+0
2.64000000000000E+0      0.00000000000000E+0      0.00000000000000E+0
0.00000000000000E+0      0.00000000000000E+0
   BmDistLoadG              8     324      Z      1     2.64000000000000E+0
2.64000000000000E+0      0.00000000000000E+0      0.00000000000000E+0
0.00000000000000E+0      0.00000000000000E+0
   BmDistLoadG              8     325      Z      1     2.64000000000000E+0
2.64000000000000E+0      0.00000000000000E+0      0.00000000000000E+0
0.00000000000000E+0      0.00000000000000E+0
   BmDistLoadG              8     326      Z      1     2.64000000000000E+0
2.64000000000000E+0      0.00000000000000E+0      0.00000000000000E+0
0.00000000000000E+0      0.00000000000000E+0
   BmDistLoadG              8     327      Z      1     2.64000000000000E+0
2.64000000000000E+0      0.00000000000000E+0      0.00000000000000E+0
0.00000000000000E+0      0.00000000000000E+0
   BmDistLoadG              8     328      Z      1     2.64000000000000E+0
2.64000000000000E+0      0.00000000000000E+0      0.00000000000000E+0
0.00000000000000E+0      0.00000000000000E+0
   BmDistLoadG              8     329      Z      1     2.64000000000000E+0
2.64000000000000E+0      0.00000000000000E+0      0.00000000000000E+0
0.00000000000000E+0      0.00000000000000E+0
   BmDistLoadG              8     330      Z      1     2.64000000000000E+0
2.64000000000000E+0      0.00000000000000E+0      0.00000000000000E+0
```

```
0.00000000000000E+0       0.00000000000000E+0
   BmDistLoadG               8      331       Z        1      2.64000000000000E+0
2.64000000000000E+0       0.00000000000000E+0       0.00000000000000E+0
0.00000000000000E+0       0.00000000000000E+0
   BmDistLoadG               8      332       Z        1      2.64000000000000E+0
2.64000000000000E+0       0.00000000000000E+0       0.00000000000000E+0
0.00000000000000E+0       0.00000000000000E+0
   BmDistLoadG               8      333       Z        1      2.64000000000000E+0
2.64000000000000E+0       0.00000000000000E+0       0.00000000000000E+0
0.00000000000000E+0       0.00000000000000E+0
   BmDistLoadG               8      334       Z        1      2.64000000000000E+0
2.64000000000000E+0       0.00000000000000E+0       0.00000000000000E+0
0.00000000000000E+0       0.00000000000000E+0
   BmDistLoadG               8      335       Z        1      2.64000000000000E+0
2.64000000000000E+0       0.00000000000000E+0       0.00000000000000E+0
0.00000000000000E+0       0.00000000000000E+0
   BmDistLoadG               8      336       Z        1      2.64000000000000E+0
2.64000000000000E+0       0.00000000000000E+0       0.00000000000000E+0
0.00000000000000E+0       0.00000000000000E+0
   BmDistLoadG               8      337       Z        1      2.64000000000000E+0
2.64000000000000E+0       0.00000000000000E+0       0.00000000000000E+0
0.00000000000000E+0       0.00000000000000E+0
   BmDistLoadG               8      338       Z        1      2.64000000000000E+0
2.64000000000000E+0       0.00000000000000E+0       0.00000000000000E+0
0.00000000000000E+0       0.00000000000000E+0
   BmDistLoadG               8      339       Z        1      2.64000000000000E+0
2.64000000000000E+0       0.00000000000000E+0       0.00000000000000E+0
0.00000000000000E+0       0.00000000000000E+0
   BmDistLoadG               8      340       Z        1      2.64000000000000E+0
2.64000000000000E+0       0.00000000000000E+0       0.00000000000000E+0
0.00000000000000E+0       0.00000000000000E+0
   BmDistLoadG               8      341       Z        1      2.64000000000000E+0
2.64000000000000E+0       0.00000000000000E+0       0.00000000000000E+0
0.00000000000000E+0       0.00000000000000E+0
   BmDistLoadG               8      342       Z        1      2.64000000000000E+0
2.64000000000000E+0       0.00000000000000E+0       0.00000000000000E+0
0.00000000000000E+0       0.00000000000000E+0
   BmDistLoadG               8      343       Z        1      2.64000000000000E+0
2.64000000000000E+0       0.00000000000000E+0       0.00000000000000E+0
0.00000000000000E+0       0.00000000000000E+0
   BmDistLoadG               8      344       Z        1      2.64000000000000E+0
2.64000000000000E+0       0.00000000000000E+0       0.00000000000000E+0
0.00000000000000E+0       0.00000000000000E+0
   BmDistLoadG               8      345       Z        1      2.64000000000000E+0
2.64000000000000E+0       0.00000000000000E+0       0.00000000000000E+0
0.00000000000000E+0       0.00000000000000E+0
   BmDistLoadG               8      346       Z        1      2.64000000000000E+0
2.64000000000000E+0       0.00000000000000E+0       0.00000000000000E+0
0.00000000000000E+0       0.00000000000000E+0
   BmDistLoadG               8      347       Z        1      2.64000000000000E+0
2.64000000000000E+0       0.00000000000000E+0       0.00000000000000E+0
0.00000000000000E+0       0.00000000000000E+0
   BmDistLoadG               8      348       Z        1      2.64000000000000E+0
2.64000000000000E+0       0.00000000000000E+0       0.00000000000000E+0
```

```
0.00000000000000E+0     0.00000000000000E+0
   BmDistLoadG             8    349      Z      1     2.64000000000000E+0
2.64000000000000E+0     0.00000000000000E+0     0.00000000000000E+0
0.00000000000000E+0     0.00000000000000E+0
   BmDistLoadG             8    350      Z      1     2.64000000000000E+0
2.64000000000000E+0     0.00000000000000E+0     0.00000000000000E+0
0.00000000000000E+0     0.00000000000000E+0
   BmDistLoadG             8    351      Z      1     2.64000000000000E+0
2.64000000000000E+0     0.00000000000000E+0     0.00000000000000E+0
0.00000000000000E+0     0.00000000000000E+0
   BmDistLoadG             8    352      Z      1     2.64000000000000E+0
2.64000000000000E+0     0.00000000000000E+0     0.00000000000000E+0
0.00000000000000E+0     0.00000000000000E+0
   BmDistLoadG             8    353      Z      1     2.64000000000000E+0
2.64000000000000E+0     0.00000000000000E+0     0.00000000000000E+0
0.00000000000000E+0     0.00000000000000E+0
   BmDistLoadG             8    354      Z      1     2.64000000000000E+0
2.64000000000000E+0     0.00000000000000E+0     0.00000000000000E+0
0.00000000000000E+0     0.00000000000000E+0
   BmDistLoadG             8    355      Z      1     2.64000000000000E+0
2.64000000000000E+0     0.00000000000000E+0     0.00000000000000E+0
0.00000000000000E+0     0.00000000000000E+0
   BmDistLoadG             8    356      Z      1     2.64000000000000E+0
2.64000000000000E+0     0.00000000000000E+0     0.00000000000000E+0
0.00000000000000E+0     0.00000000000000E+0
   BmDistLoadG             8    357      Z      1     2.64000000000000E+0
2.64000000000000E+0     0.00000000000000E+0     0.00000000000000E+0
0.00000000000000E+0     0.00000000000000E+0
   BmDistLoadG             8    358      Z      1     2.64000000000000E+0
2.64000000000000E+0     0.00000000000000E+0     0.00000000000000E+0
0.00000000000000E+0     0.00000000000000E+0
   BmDistLoadG             8    359      Z      1     2.64000000000000E+0
2.64000000000000E+0     0.00000000000000E+0     0.00000000000000E+0
0.00000000000000E+0     0.00000000000000E+0
   BmDistLoadG             8    360      Z      1     2.64000000000000E+0
2.64000000000000E+0     0.00000000000000E+0     0.00000000000000E+0
0.00000000000000E+0     0.00000000000000E+0
   BmDistLoadG             8    361      Z      1     2.64000000000000E+0
2.64000000000000E+0     0.00000000000000E+0     0.00000000000000E+0
0.00000000000000E+0     0.00000000000000E+0
   BmDistLoadG             8    362      Z      1     2.64000000000000E+0
2.64000000000000E+0     0.00000000000000E+0     0.00000000000000E+0
0.00000000000000E+0     0.00000000000000E+0
   BmDistLoadG             8    363      Z      1     2.64000000000000E+0
2.64000000000000E+0     0.00000000000000E+0     0.00000000000000E+0
0.00000000000000E+0     0.00000000000000E+0
   BmDistLoadG             8    364      Z      1     2.64000000000000E+0
2.64000000000000E+0     0.00000000000000E+0     0.00000000000000E+0
0.00000000000000E+0     0.00000000000000E+0
   BmDistLoadG             8    365      Z      1     2.64000000000000E+0
2.64000000000000E+0     0.00000000000000E+0     0.00000000000000E+0
0.00000000000000E+0     0.00000000000000E+0
   BmDistLoadG             8    366      Z      1     2.64000000000000E+0
2.64000000000000E+0     0.00000000000000E+0     0.00000000000000E+0
```

```
0.00000000000000E+0      0.00000000000000E+0
   BmDistLoadG               8     367       Z      1     2.64000000000000E+0
2.64000000000000E+0      0.00000000000000E+0      0.00000000000000E+0
0.00000000000000E+0      0.00000000000000E+0
   BmDistLoadG               8     368       Z      1     2.64000000000000E+0
2.64000000000000E+0      0.00000000000000E+0      0.00000000000000E+0
0.00000000000000E+0      0.00000000000000E+0
   BmDistLoadG               8     369       Z      1     2.64000000000000E+0
2.64000000000000E+0      0.00000000000000E+0      0.00000000000000E+0
0.00000000000000E+0      0.00000000000000E+0
   BmDistLoadG               8     370       Z      1     2.64000000000000E+0
2.64000000000000E+0      0.00000000000000E+0      0.00000000000000E+0
0.00000000000000E+0      0.00000000000000E+0
   BmDistLoadG               8     371       Z      1     2.64000000000000E+0
2.64000000000000E+0      0.00000000000000E+0      0.00000000000000E+0
0.00000000000000E+0      0.00000000000000E+0
   BmDistLoadG               8     372       Z      1     2.64000000000000E+0
2.64000000000000E+0      0.00000000000000E+0      0.00000000000000E+0
0.00000000000000E+0      0.00000000000000E+0
   BmDistLoadG               8     373       Z      1     2.64000000000000E+0
2.64000000000000E+0      0.00000000000000E+0      0.00000000000000E+0
0.00000000000000E+0      0.00000000000000E+0
   BmDistLoadG               8     374       Z      1     2.64000000000000E+0
2.64000000000000E+0      0.00000000000000E+0      0.00000000000000E+0
0.00000000000000E+0      0.00000000000000E+0
   BmDistLoadG               8     375       Z      1     2.64000000000000E+0
2.64000000000000E+0      0.00000000000000E+0      0.00000000000000E+0
0.00000000000000E+0      0.00000000000000E+0
   BmDistLoadG               8     376       Z      1     2.64000000000000E+0
2.64000000000000E+0      0.00000000000000E+0      0.00000000000000E+0
0.00000000000000E+0      0.00000000000000E+0
   BmDistLoadG               8     377       Z      1     2.64000000000000E+0
2.64000000000000E+0      0.00000000000000E+0      0.00000000000000E+0
0.00000000000000E+0      0.00000000000000E+0
   BmDistLoadG               8     378       Z      1     2.64000000000000E+0
2.64000000000000E+0      0.00000000000000E+0      0.00000000000000E+0
0.00000000000000E+0      0.00000000000000E+0
   BmDistLoadG               8     379       Z      1     2.64000000000000E+0
2.64000000000000E+0      0.00000000000000E+0      0.00000000000000E+0
0.00000000000000E+0      0.00000000000000E+0
   BmDistLoadG               8     380       Z      1     2.64000000000000E+0
2.64000000000000E+0      0.00000000000000E+0      0.00000000000000E+0
0.00000000000000E+0      0.00000000000000E+0
   BmDistLoadG               8     381       Z      1     2.64000000000000E+0
2.64000000000000E+0      0.00000000000000E+0      0.00000000000000E+0
0.00000000000000E+0      0.00000000000000E+0
   BmDistLoadG               8     382       Z      1     2.64000000000000E+0
2.64000000000000E+0      0.00000000000000E+0      0.00000000000000E+0
0.00000000000000E+0      0.00000000000000E+0
   BmDistLoadG               8     383       Z      1     2.64000000000000E+0
2.64000000000000E+0      0.00000000000000E+0      0.00000000000000E+0
0.00000000000000E+0      0.00000000000000E+0
   BmDistLoadG               8     384       Z      1     2.64000000000000E+0
2.64000000000000E+0      0.00000000000000E+0      0.00000000000000E+0
```

```
0.00000000000000E+0       0.00000000000000E+0
   BmDistLoadG               8      385       Z       1      2.64000000000000E+0
2.64000000000000E+0       0.00000000000000E+0       0.00000000000000E+0
0.00000000000000E+0       0.00000000000000E+0
   BmDistLoadG               8      386       Z       1      2.64000000000000E+0
2.64000000000000E+0       0.00000000000000E+0       0.00000000000000E+0
0.00000000000000E+0       0.00000000000000E+0
   BmDistLoadG               8      387       Z       1      2.64000000000000E+0
2.64000000000000E+0       0.00000000000000E+0       0.00000000000000E+0
0.00000000000000E+0       0.00000000000000E+0
   BmDistLoadG               8      388       Z       1      2.64000000000000E+0
2.64000000000000E+0       0.00000000000000E+0       0.00000000000000E+0
0.00000000000000E+0       0.00000000000000E+0
   BmDistLoadG               8      389       Z       1      2.64000000000000E+0
2.64000000000000E+0       0.00000000000000E+0       0.00000000000000E+0
0.00000000000000E+0       0.00000000000000E+0
   BmDistLoadG               8      390       Z       1      2.64000000000000E+0
2.64000000000000E+0       0.00000000000000E+0       0.00000000000000E+0
0.00000000000000E+0       0.00000000000000E+0
   BmDistLoadG               8      391       Z       1      2.64000000000000E+0
2.64000000000000E+0       0.00000000000000E+0       0.00000000000000E+0
0.00000000000000E+0       0.00000000000000E+0
   BmDistLoadG               8      392       Z       1      2.64000000000000E+0
2.64000000000000E+0       0.00000000000000E+0       0.00000000000000E+0
0.00000000000000E+0       0.00000000000000E+0
   BmDistLoadG               8      393       Z       1      2.64000000000000E+0
2.64000000000000E+0       0.00000000000000E+0       0.00000000000000E+0
0.00000000000000E+0       0.00000000000000E+0
   BmDistLoadG               8      394       Z       1      2.64000000000000E+0
2.64000000000000E+0       0.00000000000000E+0       0.00000000000000E+0
0.00000000000000E+0       0.00000000000000E+0
   BmDistLoadG               8      395       Z       1      2.64000000000000E+0
2.64000000000000E+0       0.00000000000000E+0       0.00000000000000E+0
0.00000000000000E+0       0.00000000000000E+0
   BmDistLoadG               8      396       Z       1      2.64000000000000E+0
2.64000000000000E+0       0.00000000000000E+0       0.00000000000000E+0
0.00000000000000E+0       0.00000000000000E+0
   BmDistLoadG               8      397       Z       1      2.64000000000000E+0
2.64000000000000E+0       0.00000000000000E+0       0.00000000000000E+0
0.00000000000000E+0       0.00000000000000E+0
   BmDistLoadG               8      398       Z       1      2.64000000000000E+0
2.64000000000000E+0       0.00000000000000E+0       0.00000000000000E+0
0.00000000000000E+0       0.00000000000000E+0
   BmDistLoadG               8      399       Z       1      2.64000000000000E+0
2.64000000000000E+0       0.00000000000000E+0       0.00000000000000E+0
0.00000000000000E+0       0.00000000000000E+0
   BmDistLoadG               8      400       Z       1      2.64000000000000E+0
2.64000000000000E+0       0.00000000000000E+0       0.00000000000000E+0
0.00000000000000E+0       0.00000000000000E+0
   BmDistLoadG               8      401       Z       1      2.64000000000000E+0
2.64000000000000E+0       0.00000000000000E+0       0.00000000000000E+0
0.00000000000000E+0       0.00000000000000E+0
   BmDistLoadG               8      402       Z       1      2.64000000000000E+0
2.64000000000000E+0       0.00000000000000E+0       0.00000000000000E+0
```

```
0.00000000000000E+0      0.00000000000000E+0
   BmDistLoadG              8     403      Z      1     2.64000000000000E+0
2.64000000000000E+0      0.00000000000000E+0      0.00000000000000E+0
0.00000000000000E+0      0.00000000000000E+0
   BmDistLoadG              8     404      Z      1     2.64000000000000E+0
2.64000000000000E+0      0.00000000000000E+0      0.00000000000000E+0
0.00000000000000E+0      0.00000000000000E+0
   BmDistLoadG              8     405      Z      1     2.64000000000000E+0
2.64000000000000E+0      0.00000000000000E+0      0.00000000000000E+0
0.00000000000000E+0      0.00000000000000E+0
   BmDistLoadG              8     406      Z      1     2.64000000000000E+0
2.64000000000000E+0      0.00000000000000E+0      0.00000000000000E+0
0.00000000000000E+0      0.00000000000000E+0
   BmDistLoadG              8     407      Z      1     2.64000000000000E+0
2.64000000000000E+0      0.00000000000000E+0      0.00000000000000E+0
0.00000000000000E+0      0.00000000000000E+0
   BmDistLoadG              8     408      Z      1     2.64000000000000E+0
2.64000000000000E+0      0.00000000000000E+0      0.00000000000000E+0
0.00000000000000E+0      0.00000000000000E+0
   BmDistLoadG              8     409      Z      1     2.64000000000000E+0
2.64000000000000E+0      0.00000000000000E+0      0.00000000000000E+0
0.00000000000000E+0      0.00000000000000E+0
   BmDistLoadG              8     410      Z      1     2.64000000000000E+0
2.64000000000000E+0      0.00000000000000E+0      0.00000000000000E+0
0.00000000000000E+0      0.00000000000000E+0
   BmDistLoadG              8     411      Z      1     2.64000000000000E+0
2.64000000000000E+0      0.00000000000000E+0      0.00000000000000E+0
0.00000000000000E+0      0.00000000000000E+0
   BmDistLoadG              8     412      Z      1     2.64000000000000E+0
2.64000000000000E+0      0.00000000000000E+0      0.00000000000000E+0
0.00000000000000E+0      0.00000000000000E+0
   BmDistLoadG              8     413      Z      1     2.64000000000000E+0
2.64000000000000E+0      0.00000000000000E+0      0.00000000000000E+0
0.00000000000000E+0      0.00000000000000E+0
   BmDistLoadG              8     414      Z      1     2.64000000000000E+0
2.64000000000000E+0      0.00000000000000E+0      0.00000000000000E+0
0.00000000000000E+0      0.00000000000000E+0
   BmDistLoadG              8     415      Z      1     2.64000000000000E+0
2.64000000000000E+0      0.00000000000000E+0      0.00000000000000E+0
0.00000000000000E+0      0.00000000000000E+0
   BmDistLoadG              8     416      Z      1     2.64000000000000E+0
2.64000000000000E+0      0.00000000000000E+0      0.00000000000000E+0
0.00000000000000E+0      0.00000000000000E+0
   BmDistLoadG              8     417      Z      1     2.64000000000000E+0
2.64000000000000E+0      0.00000000000000E+0      0.00000000000000E+0
0.00000000000000E+0      0.00000000000000E+0
   BmDistLoadG              8     418      Z      1     2.64000000000000E+0
2.64000000000000E+0      0.00000000000000E+0      0.00000000000000E+0
0.00000000000000E+0      0.00000000000000E+0
   BmDistLoadG              8     419      Z      1     2.64000000000000E+0
2.64000000000000E+0      0.00000000000000E+0      0.00000000000000E+0
0.00000000000000E+0      0.00000000000000E+0
   BmDistLoadG              8     420      Z      1     2.64000000000000E+0
2.64000000000000E+0      0.00000000000000E+0      0.00000000000000E+0
```

```
0.00000000000000E+0      0.00000000000000E+0
   BmDistLoadG              8     421        Z      1     2.64000000000000E+0
2.64000000000000E+0      0.00000000000000E+0      0.00000000000000E+0
0.00000000000000E+0      0.00000000000000E+0
   BmDistLoadG              8     422        Z      1     2.64000000000000E+0
2.64000000000000E+0      0.00000000000000E+0      0.00000000000000E+0
0.00000000000000E+0      0.00000000000000E+0
   BmDistLoadG              8     423        Z      1     2.64000000000000E+0
2.64000000000000E+0      0.00000000000000E+0      0.00000000000000E+0
0.00000000000000E+0      0.00000000000000E+0
   BmDistLoadG              8     424        Z      1     2.64000000000000E+0
2.64000000000000E+0      0.00000000000000E+0      0.00000000000000E+0
0.00000000000000E+0      0.00000000000000E+0
   BmDistLoadG              8     425        Z      1     2.64000000000000E+0
2.64000000000000E+0      0.00000000000000E+0      0.00000000000000E+0
0.00000000000000E+0      0.00000000000000E+0
   BmDistLoadG              8     426        Z      1     2.64000000000000E+0
2.64000000000000E+0      0.00000000000000E+0      0.00000000000000E+0
0.00000000000000E+0      0.00000000000000E+0
   BmDistLoadG              8     427        Z      1     2.64000000000000E+0
2.64000000000000E+0      0.00000000000000E+0      0.00000000000000E+0
0.00000000000000E+0      0.00000000000000E+0
   BmDistLoadG              8     428        Z      1     2.64000000000000E+0
2.64000000000000E+0      0.00000000000000E+0      0.00000000000000E+0
0.00000000000000E+0      0.00000000000000E+0
   BmDistLoadG              8     429        Z      1     2.64000000000000E+0
2.64000000000000E+0      0.00000000000000E+0      0.00000000000000E+0
0.00000000000000E+0      0.00000000000000E+0
   BmDistLoadG              8     430        Z      1     2.64000000000000E+0
2.64000000000000E+0      0.00000000000000E+0      0.00000000000000E+0
0.00000000000000E+0      0.00000000000000E+0
   BmDistLoadG              8     431        Z      1     2.64000000000000E+0
2.64000000000000E+0      0.00000000000000E+0      0.00000000000000E+0
0.00000000000000E+0      0.00000000000000E+0
   BmDistLoadG              8     432        Z      1     2.64000000000000E+0
2.64000000000000E+0      0.00000000000000E+0      0.00000000000000E+0
0.00000000000000E+0      0.00000000000000E+0
   BmDistLoadG              8     433        Z      1     2.64000000000000E+0
2.64000000000000E+0      0.00000000000000E+0      0.00000000000000E+0
0.00000000000000E+0      0.00000000000000E+0
   BmDistLoadG              8     434        Y      1     1.20000000000000E+0
1.20000000000000E+0      0.00000000000000E+0      0.00000000000000E+0
0.00000000000000E+0      0.00000000000000E+0
   BmDistLoadG              8     435        Y      1     1.20000000000000E+0
1.20000000000000E+0      0.00000000000000E+0      0.00000000000000E+0
0.00000000000000E+0      0.00000000000000E+0
   BmDistLoadG              8     436        Y      1     1.20000000000000E+0
1.20000000000000E+0      0.00000000000000E+0      0.00000000000000E+0
0.00000000000000E+0      0.00000000000000E+0
   BmDistLoadG              8     437        Y      1     1.20000000000000E+0
1.20000000000000E+0      0.00000000000000E+0      0.00000000000000E+0
0.00000000000000E+0      0.00000000000000E+0
   BmDistLoadG              8     438        Y      1     1.20000000000000E+0
1.20000000000000E+0      0.00000000000000E+0      0.00000000000000E+0
```

```
0.00000000000000E+0      0.00000000000000E+0
   BmDistLoadG              8     649      Z      1     1.32000000000000E+0
1.32000000000000E+0      0.00000000000000E+0      0.00000000000000E+0
0.00000000000000E+0      0.00000000000000E+0
   BmDistLoadG              8     650      Z      1     1.32000000000000E+0
1.32000000000000E+0      0.00000000000000E+0      0.00000000000000E+0
0.00000000000000E+0      0.00000000000000E+0
   BmDistLoadG              8     651      Z      1     1.32000000000000E+0
1.32000000000000E+0      0.00000000000000E+0      0.00000000000000E+0
0.00000000000000E+0      0.00000000000000E+0
   BmDistLoadG              8     652      Z      1     1.32000000000000E+0
1.32000000000000E+0      0.00000000000000E+0      0.00000000000000E+0
0.00000000000000E+0      0.00000000000000E+0
   BmDistLoadG              8     653      Z      1     2.64000000000000E+0
2.64000000000000E+0      0.00000000000000E+0      0.00000000000000E+0
0.00000000000000E+0      0.00000000000000E+0
   BmDistLoadG              8     654      Z      1     2.64000000000000E+0
2.64000000000000E+0      0.00000000000000E+0      0.00000000000000E+0
0.00000000000000E+0      0.00000000000000E+0
   BmDistLoadG              8     655      Z      1     2.64000000000000E+0
2.64000000000000E+0      0.00000000000000E+0      0.00000000000000E+0
0.00000000000000E+0      0.00000000000000E+0
   BmDistLoadG              8     656      Z      1     2.64000000000000E+0
2.64000000000000E+0      0.00000000000000E+0      0.00000000000000E+0
0.00000000000000E+0      0.00000000000000E+0
   BmDistLoadG              8     657      Z      1     2.64000000000000E+0
2.64000000000000E+0      0.00000000000000E+0      0.00000000000000E+0
0.00000000000000E+0      0.00000000000000E+0
   BmDistLoadG              8     658      Z      1     2.64000000000000E+0
2.64000000000000E+0      0.00000000000000E+0      0.00000000000000E+0
0.00000000000000E+0      0.00000000000000E+0
   BmDistLoadG              8     659      Z      1     2.64000000000000E+0
2.64000000000000E+0      0.00000000000000E+0      0.00000000000000E+0
0.00000000000000E+0      0.00000000000000E+0
   BmDistLoadG              8     660      Z      1     2.64000000000000E+0
2.64000000000000E+0      0.00000000000000E+0      0.00000000000000E+0
0.00000000000000E+0      0.00000000000000E+0
   BmDistLoadG              8     661      Z      1     2.64000000000000E+0
2.64000000000000E+0      0.00000000000000E+0      0.00000000000000E+0
0.00000000000000E+0      0.00000000000000E+0
   BmDistLoadG              8     662      Z      1     2.64000000000000E+0
2.64000000000000E+0      0.00000000000000E+0      0.00000000000000E+0
0.00000000000000E+0      0.00000000000000E+0
   BmDistLoadG              8     663      Z      1     2.64000000000000E+0
2.64000000000000E+0      0.00000000000000E+0      0.00000000000000E+0
0.00000000000000E+0      0.00000000000000E+0
   BmDistLoadG              8     664      Z      1     2.64000000000000E+0
2.64000000000000E+0      0.00000000000000E+0      0.00000000000000E+0
0.00000000000000E+0      0.00000000000000E+0
   BmDistLoadG              8     665      Z      1     2.64000000000000E+0
2.64000000000000E+0      0.00000000000000E+0      0.00000000000000E+0
0.00000000000000E+0      0.00000000000000E+0
   BmDistLoadG              8     666      Z      1     2.64000000000000E+0
2.64000000000000E+0      0.00000000000000E+0      0.00000000000000E+0
```

```
0.00000000000000E+0      0.00000000000000E+0
   BmDistLoadG              8     667      Z      1     2.64000000000000E+0
2.64000000000000E+0      0.00000000000000E+0      0.00000000000000E+0
0.00000000000000E+0      0.00000000000000E+0
   BmDistLoadG              8     668      Z      1     2.64000000000000E+0
2.64000000000000E+0      0.00000000000000E+0      0.00000000000000E+0
0.00000000000000E+0      0.00000000000000E+0

/ ____________________________________________________________________________
/ BEAM GLOBAL DISTRIBUTED LOADS
/ Q03b - Effetti Aerodinamici Convogli Y-
   BmDistLoadG             10      13      Z      1     1.32000000000000E+0
1.32000000000000E+0      0.00000000000000E+0      0.00000000000000E+0
0.00000000000000E+0      0.00000000000000E+0
   BmDistLoadG             10      14      Z      1     2.64000000000000E+0
2.64000000000000E+0      0.00000000000000E+0      0.00000000000000E+0
0.00000000000000E+0      0.00000000000000E+0
   BmDistLoadG             10      15      Z      1     2.64000000000000E+0
2.64000000000000E+0      0.00000000000000E+0      0.00000000000000E+0
0.00000000000000E+0      0.00000000000000E+0
   BmDistLoadG             10      16      Z      1     2.64000000000000E+0
2.64000000000000E+0      0.00000000000000E+0      0.00000000000000E+0
0.00000000000000E+0      0.00000000000000E+0
   BmDistLoadG             10      17      Z      1     2.64000000000000E+0
2.64000000000000E+0      0.00000000000000E+0      0.00000000000000E+0
0.00000000000000E+0      0.00000000000000E+0
   BmDistLoadG             10      18      Z      1     2.64000000000000E+0
2.64000000000000E+0      0.00000000000000E+0      0.00000000000000E+0
0.00000000000000E+0      0.00000000000000E+0
   BmDistLoadG             10      19      Z      1     2.64000000000000E+0
2.64000000000000E+0      0.00000000000000E+0      0.00000000000000E+0
0.00000000000000E+0      0.00000000000000E+0
   BmDistLoadG             10      20      Z      1     2.64000000000000E+0
2.64000000000000E+0      0.00000000000000E+0      0.00000000000000E+0
0.00000000000000E+0      0.00000000000000E+0
   BmDistLoadG             10      21      Z      1     2.64000000000000E+0
2.64000000000000E+0      0.00000000000000E+0      0.00000000000000E+0
0.00000000000000E+0      0.00000000000000E+0
   BmDistLoadG             10      22      Z      1     1.32000000000000E+0
1.32000000000000E+0      0.00000000000000E+0      0.00000000000000E+0
0.00000000000000E+0      0.00000000000000E+0
   BmDistLoadG             10      69      Y      1    -6.00000000000000E-1
-6.00000000000000E-1      0.00000000000000E+0      0.00000000000000E+0
0.00000000000000E+0      0.00000000000000E+0
   BmDistLoadG             10      70      Y      1    -6.00000000000000E-1
-6.00000000000000E-1      0.00000000000000E+0      0.00000000000000E+0
0.00000000000000E+0      0.00000000000000E+0
   BmDistLoadG             10      71      Y      1    -6.00000000000000E-1
-6.00000000000000E-1      0.00000000000000E+0      0.00000000000000E+0
0.00000000000000E+0      0.00000000000000E+0
   BmDistLoadG             10      72      Y      1    -6.00000000000000E-1
-6.00000000000000E-1      0.00000000000000E+0      0.00000000000000E+0
0.00000000000000E+0      0.00000000000000E+0
   BmDistLoadG             10      73      Y      1    -6.00000000000000E-1
```

-6.00000000000000E-1 0.00000000000000E+0 0.00000000000000E+0
0.00000000000000E+0 0.00000000000000E+0
BmDistLoadG 10 74 Y 1 -1.20000000000000E+0
-1.20000000000000E+0 0.00000000000000E+0 0.00000000000000E+0
0.00000000000000E+0 0.00000000000000E+0
BmDistLoadG 10 75 Y 1 -1.20000000000000E+0
-1.20000000000000E+0 0.00000000000000E+0 0.00000000000000E+0
0.00000000000000E+0 0.00000000000000E+0
BmDistLoadG 10 76 Y 1 -1.20000000000000E+0
-1.20000000000000E+0 0.00000000000000E+0 0.00000000000000E+0
0.00000000000000E+0 0.00000000000000E+0
BmDistLoadG 10 77 Y 1 -1.20000000000000E+0
-1.20000000000000E+0 0.00000000000000E+0 0.00000000000000E+0
0.00000000000000E+0 0.00000000000000E+0
BmDistLoadG 10 78 Y 1 -1.20000000000000E+0
-1.20000000000000E+0 0.00000000000000E+0 0.00000000000000E+0
0.00000000000000E+0 0.00000000000000E+0
BmDistLoadG 10 79 Y 1 -1.20000000000000E+0
-1.20000000000000E+0 0.00000000000000E+0 0.00000000000000E+0
0.00000000000000E+0 0.00000000000000E+0
BmDistLoadG 10 80 Y 1 -1.20000000000000E+0
-1.20000000000000E+0 0.00000000000000E+0 0.00000000000000E+0
0.00000000000000E+0 0.00000000000000E+0
BmDistLoadG 10 81 Y 1 -1.20000000000000E+0
-1.20000000000000E+0 0.00000000000000E+0 0.00000000000000E+0
0.00000000000000E+0 0.00000000000000E+0
BmDistLoadG 10 82 Y 1 -1.20000000000000E+0
-1.20000000000000E+0 0.00000000000000E+0 0.00000000000000E+0
0.00000000000000E+0 0.00000000000000E+0
BmDistLoadG 10 83 Y 1 -1.20000000000000E+0
-1.20000000000000E+0 0.00000000000000E+0 0.00000000000000E+0
0.00000000000000E+0 0.00000000000000E+0
BmDistLoadG 10 84 Y 1 -1.20000000000000E+0
-1.20000000000000E+0 0.00000000000000E+0 0.00000000000000E+0
0.00000000000000E+0 0.00000000000000E+0
BmDistLoadG 10 85 Y 1 -1.20000000000000E+0
-1.20000000000000E+0 0.00000000000000E+0 0.00000000000000E+0
0.00000000000000E+0 0.00000000000000E+0
BmDistLoadG 10 86 Y 1 -1.20000000000000E+0
-1.20000000000000E+0 0.00000000000000E+0 0.00000000000000E+0
0.00000000000000E+0 0.00000000000000E+0
BmDistLoadG 10 87 Y 1 -1.20000000000000E+0
-1.20000000000000E+0 0.00000000000000E+0 0.00000000000000E+0
0.00000000000000E+0 0.00000000000000E+0
BmDistLoadG 10 88 Y 1 -1.20000000000000E+0
-1.20000000000000E+0 0.00000000000000E+0 0.00000000000000E+0
0.00000000000000E+0 0.00000000000000E+0
BmDistLoadG 10 89 Y 1 -1.20000000000000E+0
-1.20000000000000E+0 0.00000000000000E+0 0.00000000000000E+0
0.00000000000000E+0 0.00000000000000E+0
BmDistLoadG 10 90 Y 1 -1.20000000000000E+0
-1.20000000000000E+0 0.00000000000000E+0 0.00000000000000E+0
0.00000000000000E+0 0.00000000000000E+0
BmDistLoadG 10 91 Y 1 -1.20000000000000E+0

-1.20000000000000E+0 0.00000000000000E+0 0.00000000000000E+0
0.00000000000000E+0 0.00000000000000E+0
BmDistLoadG 10 92 Y 1 -1.20000000000000E+0
-1.20000000000000E+0 0.00000000000000E+0 0.00000000000000E+0
0.00000000000000E+0 0.00000000000000E+0
BmDistLoadG 10 93 Y 1 -1.20000000000000E+0
-1.20000000000000E+0 0.00000000000000E+0 0.00000000000000E+0
0.00000000000000E+0 0.00000000000000E+0
BmDistLoadG 10 94 Y 1 -1.20000000000000E+0
-1.20000000000000E+0 0.00000000000000E+0 0.00000000000000E+0
0.00000000000000E+0 0.00000000000000E+0
BmDistLoadG 10 95 Y 1 -1.20000000000000E+0
-1.20000000000000E+0 0.00000000000000E+0 0.00000000000000E+0
0.00000000000000E+0 0.00000000000000E+0
BmDistLoadG 10 96 Y 1 -1.20000000000000E+0
-1.20000000000000E+0 0.00000000000000E+0 0.00000000000000E+0
0.00000000000000E+0 0.00000000000000E+0
BmDistLoadG 10 97 Y 1 -1.20000000000000E+0
-1.20000000000000E+0 0.00000000000000E+0 0.00000000000000E+0
0.00000000000000E+0 0.00000000000000E+0
BmDistLoadG 10 98 Y 1 -1.20000000000000E+0
-1.20000000000000E+0 0.00000000000000E+0 0.00000000000000E+0
0.00000000000000E+0 0.00000000000000E+0
BmDistLoadG 10 99 Y 1 -1.20000000000000E+0
-1.20000000000000E+0 0.00000000000000E+0 0.00000000000000E+0
0.00000000000000E+0 0.00000000000000E+0
BmDistLoadG 10 100 Y 1 -1.20000000000000E+0
-1.20000000000000E+0 0.00000000000000E+0 0.00000000000000E+0
0.00000000000000E+0 0.00000000000000E+0
BmDistLoadG 10 101 Y 1 -1.20000000000000E+0
-1.20000000000000E+0 0.00000000000000E+0 0.00000000000000E+0
0.00000000000000E+0 0.00000000000000E+0
BmDistLoadG 10 102 Y 1 -1.20000000000000E+0
-1.20000000000000E+0 0.00000000000000E+0 0.00000000000000E+0
0.00000000000000E+0 0.00000000000000E+0
BmDistLoadG 10 103 Y 1 -1.20000000000000E+0
-1.20000000000000E+0 0.00000000000000E+0 0.00000000000000E+0
0.00000000000000E+0 0.00000000000000E+0
BmDistLoadG 10 104 Y 1 -1.20000000000000E+0
-1.20000000000000E+0 0.00000000000000E+0 0.00000000000000E+0
0.00000000000000E+0 0.00000000000000E+0
BmDistLoadG 10 105 Y 1 -1.20000000000000E+0
-1.20000000000000E+0 0.00000000000000E+0 0.00000000000000E+0
0.00000000000000E+0 0.00000000000000E+0
BmDistLoadG 10 106 Y 1 -1.20000000000000E+0
-1.20000000000000E+0 0.00000000000000E+0 0.00000000000000E+0
0.00000000000000E+0 0.00000000000000E+0
BmDistLoadG 10 107 Y 1 -1.20000000000000E+0
-1.20000000000000E+0 0.00000000000000E+0 0.00000000000000E+0
0.00000000000000E+0 0.00000000000000E+0
BmDistLoadG 10 108 Y 1 -1.20000000000000E+0
-1.20000000000000E+0 0.00000000000000E+0 0.00000000000000E+0
0.00000000000000E+0 0.00000000000000E+0
BmDistLoadG 10 109 Y 1 -1.20000000000000E+0

-1.20000000000000E+0 0.00000000000000E+0 0.00000000000000E+0
0.00000000000000E+0 0.00000000000000E+0
BmDistLoadG 10 110 Y 1 -1.20000000000000E+0
-1.20000000000000E+0 0.00000000000000E+0 0.00000000000000E+0
0.00000000000000E+0 0.00000000000000E+0
BmDistLoadG 10 111 Y 1 -1.20000000000000E+0
-1.20000000000000E+0 0.00000000000000E+0 0.00000000000000E+0
0.00000000000000E+0 0.00000000000000E+0
BmDistLoadG 10 112 Y 1 -1.20000000000000E+0
-1.20000000000000E+0 0.00000000000000E+0 0.00000000000000E+0
0.00000000000000E+0 0.00000000000000E+0
BmDistLoadG 10 113 Y 1 -1.20000000000000E+0
-1.20000000000000E+0 0.00000000000000E+0 0.00000000000000E+0
0.00000000000000E+0 0.00000000000000E+0
BmDistLoadG 10 114 Y 1 -6.00000000000000E-1
-6.00000000000000E-1 0.00000000000000E+0 0.00000000000000E+0
0.00000000000000E+0 0.00000000000000E+0
BmDistLoadG 10 115 Y 1 -6.00000000000000E-1
-6.00000000000000E-1 0.00000000000000E+0 0.00000000000000E+0
0.00000000000000E+0 0.00000000000000E+0
BmDistLoadG 10 116 Y 1 -6.00000000000000E-1
-6.00000000000000E-1 0.00000000000000E+0 0.00000000000000E+0
0.00000000000000E+0 0.00000000000000E+0
BmDistLoadG 10 117 Y 1 -6.00000000000000E-1
-6.00000000000000E-1 0.00000000000000E+0 0.00000000000000E+0
0.00000000000000E+0 0.00000000000000E+0
BmDistLoadG 10 118 Y 1 -6.00000000000000E-1
-6.00000000000000E-1 0.00000000000000E+0 0.00000000000000E+0
0.00000000000000E+0 0.00000000000000E+0
BmDistLoadG 10 119 Y 1 -6.00000000000000E-1
-6.00000000000000E-1 0.00000000000000E+0 0.00000000000000E+0
0.00000000000000E+0 0.00000000000000E+0
BmDistLoadG 10 120 Y 1 -6.00000000000000E-1
-6.00000000000000E-1 0.00000000000000E+0 0.00000000000000E+0
0.00000000000000E+0 0.00000000000000E+0
BmDistLoadG 10 121 Y 1 -6.00000000000000E-1
-6.00000000000000E-1 0.00000000000000E+0 0.00000000000000E+0
0.00000000000000E+0 0.00000000000000E+0
BmDistLoadG 10 122 Y 1 -6.00000000000000E-1
-6.00000000000000E-1 0.00000000000000E+0 0.00000000000000E+0
0.00000000000000E+0 0.00000000000000E+0
BmDistLoadG 10 123 Y 1 -6.00000000000000E-1
-6.00000000000000E-1 0.00000000000000E+0 0.00000000000000E+0
0.00000000000000E+0 0.00000000000000E+0
BmDistLoadG 10 124 Y 1 -1.20000000000000E+0
-1.20000000000000E+0 0.00000000000000E+0 0.00000000000000E+0
0.00000000000000E+0 0.00000000000000E+0
BmDistLoadG 10 125 Y 1 -1.20000000000000E+0
-1.20000000000000E+0 0.00000000000000E+0 0.00000000000000E+0
0.00000000000000E+0 0.00000000000000E+0
BmDistLoadG 10 126 Y 1 -1.20000000000000E+0
-1.20000000000000E+0 0.00000000000000E+0 0.00000000000000E+0
0.00000000000000E+0 0.00000000000000E+0
BmDistLoadG 10 127 Y 1 -1.20000000000000E+0

-1.20000000000000E+0 0.00000000000000E+0 0.00000000000000E+0
0.00000000000000E+0 0.00000000000000E+0
BmDistLoadG 10 128 Y 1 -1.20000000000000E+0
-1.20000000000000E+0 0.00000000000000E+0 0.00000000000000E+0
0.00000000000000E+0 0.00000000000000E+0
BmDistLoadG 10 129 Y 1 -1.20000000000000E+0
-1.20000000000000E+0 0.00000000000000E+0 0.00000000000000E+0
0.00000000000000E+0 0.00000000000000E+0
BmDistLoadG 10 130 Y 1 -1.20000000000000E+0
-1.20000000000000E+0 0.00000000000000E+0 0.00000000000000E+0
0.00000000000000E+0 0.00000000000000E+0
BmDistLoadG 10 131 Y 1 -1.20000000000000E+0
-1.20000000000000E+0 0.00000000000000E+0 0.00000000000000E+0
0.00000000000000E+0 0.00000000000000E+0
BmDistLoadG 10 132 Y 1 -1.20000000000000E+0
-1.20000000000000E+0 0.00000000000000E+0 0.00000000000000E+0
0.00000000000000E+0 0.00000000000000E+0
BmDistLoadG 10 133 Y 1 -1.20000000000000E+0
-1.20000000000000E+0 0.00000000000000E+0 0.00000000000000E+0
0.00000000000000E+0 0.00000000000000E+0
BmDistLoadG 10 134 Y 1 -1.20000000000000E+0
-1.20000000000000E+0 0.00000000000000E+0 0.00000000000000E+0
0.00000000000000E+0 0.00000000000000E+0
BmDistLoadG 10 135 Y 1 -1.20000000000000E+0
-1.20000000000000E+0 0.00000000000000E+0 0.00000000000000E+0
0.00000000000000E+0 0.00000000000000E+0
BmDistLoadG 10 136 Y 1 -1.20000000000000E+0
-1.20000000000000E+0 0.00000000000000E+0 0.00000000000000E+0
0.00000000000000E+0 0.00000000000000E+0
BmDistLoadG 10 137 Y 1 -1.20000000000000E+0
-1.20000000000000E+0 0.00000000000000E+0 0.00000000000000E+0
0.00000000000000E+0 0.00000000000000E+0
BmDistLoadG 10 138 Y 1 -1.20000000000000E+0
-1.20000000000000E+0 0.00000000000000E+0 0.00000000000000E+0
0.00000000000000E+0 0.00000000000000E+0
BmDistLoadG 10 139 Y 1 -1.20000000000000E+0
-1.20000000000000E+0 0.00000000000000E+0 0.00000000000000E+0
0.00000000000000E+0 0.00000000000000E+0
BmDistLoadG 10 140 Y 1 -1.20000000000000E+0
-1.20000000000000E+0 0.00000000000000E+0 0.00000000000000E+0
0.00000000000000E+0 0.00000000000000E+0
BmDistLoadG 10 141 Y 1 -1.20000000000000E+0
-1.20000000000000E+0 0.00000000000000E+0 0.00000000000000E+0
0.00000000000000E+0 0.00000000000000E+0
BmDistLoadG 10 142 Y 1 -1.20000000000000E+0
-1.20000000000000E+0 0.00000000000000E+0 0.00000000000000E+0
0.00000000000000E+0 0.00000000000000E+0
BmDistLoadG 10 143 Y 1 -1.20000000000000E+0
-1.20000000000000E+0 0.00000000000000E+0 0.00000000000000E+0
0.00000000000000E+0 0.00000000000000E+0
BmDistLoadG 10 144 Y 1 -1.20000000000000E+0
-1.20000000000000E+0 0.00000000000000E+0 0.00000000000000E+0
0.00000000000000E+0 0.00000000000000E+0
BmDistLoadG 10 145 Y 1 -1.20000000000000E+0

-1.20000000000000E+0 0.00000000000000E+0 0.00000000000000E+0
0.00000000000000E+0 0.00000000000000E+0
BmDistLoadG 10 146 Y 1 -1.20000000000000E+0
-1.20000000000000E+0 0.00000000000000E+0 0.00000000000000E+0
0.00000000000000E+0 0.00000000000000E+0
BmDistLoadG 10 147 Y 1 -1.20000000000000E+0
-1.20000000000000E+0 0.00000000000000E+0 0.00000000000000E+0
0.00000000000000E+0 0.00000000000000E+0
BmDistLoadG 10 148 Y 1 -1.20000000000000E+0
-1.20000000000000E+0 0.00000000000000E+0 0.00000000000000E+0
0.00000000000000E+0 0.00000000000000E+0
BmDistLoadG 10 149 Y 1 -1.20000000000000E+0
-1.20000000000000E+0 0.00000000000000E+0 0.00000000000000E+0
0.00000000000000E+0 0.00000000000000E+0
BmDistLoadG 10 150 Y 1 -1.20000000000000E+0
-1.20000000000000E+0 0.00000000000000E+0 0.00000000000000E+0
0.00000000000000E+0 0.00000000000000E+0
BmDistLoadG 10 151 Y 1 -1.20000000000000E+0
-1.20000000000000E+0 0.00000000000000E+0 0.00000000000000E+0
0.00000000000000E+0 0.00000000000000E+0
BmDistLoadG 10 152 Y 1 -1.20000000000000E+0
-1.20000000000000E+0 0.00000000000000E+0 0.00000000000000E+0
0.00000000000000E+0 0.00000000000000E+0
BmDistLoadG 10 153 Y 1 -1.20000000000000E+0
-1.20000000000000E+0 0.00000000000000E+0 0.00000000000000E+0
0.00000000000000E+0 0.00000000000000E+0
BmDistLoadG 10 154 Y 1 -1.20000000000000E+0
-1.20000000000000E+0 0.00000000000000E+0 0.00000000000000E+0
0.00000000000000E+0 0.00000000000000E+0
BmDistLoadG 10 155 Y 1 -1.20000000000000E+0
-1.20000000000000E+0 0.00000000000000E+0 0.00000000000000E+0
0.00000000000000E+0 0.00000000000000E+0
BmDistLoadG 10 156 Y 1 -1.20000000000000E+0
-1.20000000000000E+0 0.00000000000000E+0 0.00000000000000E+0
0.00000000000000E+0 0.00000000000000E+0
BmDistLoadG 10 157 Y 1 -1.20000000000000E+0
-1.20000000000000E+0 0.00000000000000E+0 0.00000000000000E+0
0.00000000000000E+0 0.00000000000000E+0
BmDistLoadG 10 158 Y 1 -1.20000000000000E+0
-1.20000000000000E+0 0.00000000000000E+0 0.00000000000000E+0
0.00000000000000E+0 0.00000000000000E+0
BmDistLoadG 10 159 Y 1 -6.00000000000000E-1
-6.00000000000000E-1 0.00000000000000E+0 0.00000000000000E+0
0.00000000000000E+0 0.00000000000000E+0
BmDistLoadG 10 160 Y 1 -6.00000000000000E-1
-6.00000000000000E-1 0.00000000000000E+0 0.00000000000000E+0
0.00000000000000E+0 0.00000000000000E+0
BmDistLoadG 10 161 Y 1 -6.00000000000000E-1
-6.00000000000000E-1 0.00000000000000E+0 0.00000000000000E+0
0.00000000000000E+0 0.00000000000000E+0
BmDistLoadG 10 162 Y 1 -6.00000000000000E-1
-6.00000000000000E-1 0.00000000000000E+0 0.00000000000000E+0
0.00000000000000E+0 0.00000000000000E+0
BmDistLoadG 10 163 Y 1 -6.00000000000000E-1

```
-6.00000000000000E-1      0.00000000000000E+0      0.00000000000000E+0
0.00000000000000E+0      0.00000000000000E+0
   BmDistLoadG             10     164        Z      1     1.32000000000000E+0
1.32000000000000E+0      0.00000000000000E+0      0.00000000000000E+0
0.00000000000000E+0      0.00000000000000E+0
   BmDistLoadG             10     165        Z      1     1.32000000000000E+0
1.32000000000000E+0      0.00000000000000E+0      0.00000000000000E+0
0.00000000000000E+0      0.00000000000000E+0
   BmDistLoadG             10     166        Z      1     1.32000000000000E+0
1.32000000000000E+0      0.00000000000000E+0      0.00000000000000E+0
0.00000000000000E+0      0.00000000000000E+0
   BmDistLoadG             10     167        Z      1     1.32000000000000E+0
1.32000000000000E+0      0.00000000000000E+0      0.00000000000000E+0
0.00000000000000E+0      0.00000000000000E+0
   BmDistLoadG             10     168        Z      1     1.32000000000000E+0
1.32000000000000E+0      0.00000000000000E+0      0.00000000000000E+0
0.00000000000000E+0      0.00000000000000E+0
   BmDistLoadG             10     169        Z      1     1.32000000000000E+0
1.32000000000000E+0      0.00000000000000E+0      0.00000000000000E+0
0.00000000000000E+0      0.00000000000000E+0
   BmDistLoadG             10     170        Z      1     1.32000000000000E+0
1.32000000000000E+0      0.00000000000000E+0      0.00000000000000E+0
0.00000000000000E+0      0.00000000000000E+0
   BmDistLoadG             10     171        Z      1     1.32000000000000E+0
1.32000000000000E+0      0.00000000000000E+0      0.00000000000000E+0
0.00000000000000E+0      0.00000000000000E+0
   BmDistLoadG             10     172        Z      1     1.32000000000000E+0
1.32000000000000E+0      0.00000000000000E+0      0.00000000000000E+0
0.00000000000000E+0      0.00000000000000E+0
   BmDistLoadG             10     173        Z      1     1.32000000000000E+0
1.32000000000000E+0      0.00000000000000E+0      0.00000000000000E+0
0.00000000000000E+0      0.00000000000000E+0
   BmDistLoadG             10     174        Z      1     1.32000000000000E+0
1.32000000000000E+0      0.00000000000000E+0      0.00000000000000E+0
0.00000000000000E+0      0.00000000000000E+0
   BmDistLoadG             10     175        Z      1     1.32000000000000E+0
1.32000000000000E+0      0.00000000000000E+0      0.00000000000000E+0
0.00000000000000E+0      0.00000000000000E+0
   BmDistLoadG             10     176        Z      1     1.32000000000000E+0
1.32000000000000E+0      0.00000000000000E+0      0.00000000000000E+0
0.00000000000000E+0      0.00000000000000E+0
   BmDistLoadG             10     177        Z      1     1.32000000000000E+0
1.32000000000000E+0      0.00000000000000E+0      0.00000000000000E+0
0.00000000000000E+0      0.00000000000000E+0
   BmDistLoadG             10     178        Z      1     1.32000000000000E+0
1.32000000000000E+0      0.00000000000000E+0      0.00000000000000E+0
0.00000000000000E+0      0.00000000000000E+0
   BmDistLoadG             10     179        Z      1     1.32000000000000E+0
1.32000000000000E+0      0.00000000000000E+0      0.00000000000000E+0
0.00000000000000E+0      0.00000000000000E+0
   BmDistLoadG             10     180        Z      1     1.32000000000000E+0
1.32000000000000E+0      0.00000000000000E+0      0.00000000000000E+0
0.00000000000000E+0      0.00000000000000E+0
   BmDistLoadG             10     181        Z      1     1.32000000000000E+0
```

```
1.32000000000000E+0     0.00000000000000E+0     0.00000000000000E+0
0.00000000000000E+0     0.00000000000000E+0
   BmDistLoadG            10     182       Z      1     1.32000000000000E+0
1.32000000000000E+0     0.00000000000000E+0     0.00000000000000E+0
0.00000000000000E+0     0.00000000000000E+0
   BmDistLoadG            10     183       Z      1     1.32000000000000E+0
1.32000000000000E+0     0.00000000000000E+0     0.00000000000000E+0
0.00000000000000E+0     0.00000000000000E+0
   BmDistLoadG            10     184       Z      1     1.32000000000000E+0
1.32000000000000E+0     0.00000000000000E+0     0.00000000000000E+0
0.00000000000000E+0     0.00000000000000E+0
   BmDistLoadG            10     185       Z      1     1.32000000000000E+0
1.32000000000000E+0     0.00000000000000E+0     0.00000000000000E+0
0.00000000000000E+0     0.00000000000000E+0
   BmDistLoadG            10     186       Z      1     1.32000000000000E+0
1.32000000000000E+0     0.00000000000000E+0     0.00000000000000E+0
0.00000000000000E+0     0.00000000000000E+0
   BmDistLoadG            10     187       Z      1     1.32000000000000E+0
1.32000000000000E+0     0.00000000000000E+0     0.00000000000000E+0
0.00000000000000E+0     0.00000000000000E+0
   BmDistLoadG            10     188       Z      1     1.32000000000000E+0
1.32000000000000E+0     0.00000000000000E+0     0.00000000000000E+0
0.00000000000000E+0     0.00000000000000E+0
   BmDistLoadG            10     189       Z      1     1.32000000000000E+0
1.32000000000000E+0     0.00000000000000E+0     0.00000000000000E+0
0.00000000000000E+0     0.00000000000000E+0
   BmDistLoadG            10     190       Z      1     1.32000000000000E+0
1.32000000000000E+0     0.00000000000000E+0     0.00000000000000E+0
0.00000000000000E+0     0.00000000000000E+0
   BmDistLoadG            10     191       Z      1     1.32000000000000E+0
1.32000000000000E+0     0.00000000000000E+0     0.00000000000000E+0
0.00000000000000E+0     0.00000000000000E+0
   BmDistLoadG            10     192       Z      1     1.32000000000000E+0
1.32000000000000E+0     0.00000000000000E+0     0.00000000000000E+0
0.00000000000000E+0     0.00000000000000E+0
   BmDistLoadG            10     193       Z      1     1.32000000000000E+0
1.32000000000000E+0     0.00000000000000E+0     0.00000000000000E+0
0.00000000000000E+0     0.00000000000000E+0
   BmDistLoadG            10     194       Z      1     1.32000000000000E+0
1.32000000000000E+0     0.00000000000000E+0     0.00000000000000E+0
0.00000000000000E+0     0.00000000000000E+0
   BmDistLoadG            10     195       Z      1     1.32000000000000E+0
1.32000000000000E+0     0.00000000000000E+0     0.00000000000000E+0
0.00000000000000E+0     0.00000000000000E+0
   BmDistLoadG            10     196       Z      1     1.32000000000000E+0
1.32000000000000E+0     0.00000000000000E+0     0.00000000000000E+0
0.00000000000000E+0     0.00000000000000E+0
   BmDistLoadG            10     197       Z      1     1.32000000000000E+0
1.32000000000000E+0     0.00000000000000E+0     0.00000000000000E+0
0.00000000000000E+0     0.00000000000000E+0
   BmDistLoadG            10     198       Z      1     1.32000000000000E+0
1.32000000000000E+0     0.00000000000000E+0     0.00000000000000E+0
0.00000000000000E+0     0.00000000000000E+0
   BmDistLoadG            10     199       Z      1     1.32000000000000E+0
```

```
1.32000000000000E+0      0.00000000000000E+0      0.00000000000000E+0
0.00000000000000E+0      0.00000000000000E+0
   BmDistLoadG             10      200       Z        1      1.32000000000000E+0
1.32000000000000E+0      0.00000000000000E+0      0.00000000000000E+0
0.00000000000000E+0      0.00000000000000E+0
   BmDistLoadG             10      201       Z        1      1.32000000000000E+0
1.32000000000000E+0      0.00000000000000E+0      0.00000000000000E+0
0.00000000000000E+0      0.00000000000000E+0
   BmDistLoadG             10      202       Z        1      1.32000000000000E+0
1.32000000000000E+0      0.00000000000000E+0      0.00000000000000E+0
0.00000000000000E+0      0.00000000000000E+0
   BmDistLoadG             10      203       Z        1      1.32000000000000E+0
1.32000000000000E+0      0.00000000000000E+0      0.00000000000000E+0
0.00000000000000E+0      0.00000000000000E+0
   BmDistLoadG             10      204       Z        1      1.32000000000000E+0
1.32000000000000E+0      0.00000000000000E+0      0.00000000000000E+0
0.00000000000000E+0      0.00000000000000E+0
   BmDistLoadG             10      205       Z        1      1.32000000000000E+0
1.32000000000000E+0      0.00000000000000E+0      0.00000000000000E+0
0.00000000000000E+0      0.00000000000000E+0
   BmDistLoadG             10      206       Z        1      1.32000000000000E+0
1.32000000000000E+0      0.00000000000000E+0      0.00000000000000E+0
0.00000000000000E+0      0.00000000000000E+0
   BmDistLoadG             10      207       Z        1      1.32000000000000E+0
1.32000000000000E+0      0.00000000000000E+0      0.00000000000000E+0
0.00000000000000E+0      0.00000000000000E+0
   BmDistLoadG             10      208       Z        1      1.32000000000000E+0
1.32000000000000E+0      0.00000000000000E+0      0.00000000000000E+0
0.00000000000000E+0      0.00000000000000E+0
   BmDistLoadG             10      209       Z        1      1.32000000000000E+0
1.32000000000000E+0      0.00000000000000E+0      0.00000000000000E+0
0.00000000000000E+0      0.00000000000000E+0
   BmDistLoadG             10      210       Z        1      1.32000000000000E+0
1.32000000000000E+0      0.00000000000000E+0      0.00000000000000E+0
0.00000000000000E+0      0.00000000000000E+0
   BmDistLoadG             10      211       Z        1      1.32000000000000E+0
1.32000000000000E+0      0.00000000000000E+0      0.00000000000000E+0
0.00000000000000E+0      0.00000000000000E+0
   BmDistLoadG             10      212       Z        1      1.32000000000000E+0
1.32000000000000E+0      0.00000000000000E+0      0.00000000000000E+0
0.00000000000000E+0      0.00000000000000E+0
   BmDistLoadG             10      213       Z        1      1.32000000000000E+0
1.32000000000000E+0      0.00000000000000E+0      0.00000000000000E+0
0.00000000000000E+0      0.00000000000000E+0
   BmDistLoadG             10      214       Z        1      1.32000000000000E+0
1.32000000000000E+0      0.00000000000000E+0      0.00000000000000E+0
0.00000000000000E+0      0.00000000000000E+0
   BmDistLoadG             10      215       Z        1      1.32000000000000E+0
1.32000000000000E+0      0.00000000000000E+0      0.00000000000000E+0
0.00000000000000E+0      0.00000000000000E+0
   BmDistLoadG             10      216       Z        1      1.32000000000000E+0
1.32000000000000E+0      0.00000000000000E+0      0.00000000000000E+0
0.00000000000000E+0      0.00000000000000E+0
   BmDistLoadG             10      217       Z        1      1.32000000000000E+0
```

```
1.32000000000000E+0      0.00000000000000E+0      0.00000000000000E+0
0.00000000000000E+0      0.00000000000000E+0
   BmDistLoadG             10     218      Z      1     2.64000000000000E+0
2.64000000000000E+0      0.00000000000000E+0      0.00000000000000E+0
0.00000000000000E+0      0.00000000000000E+0
   BmDistLoadG             10     219      Z      1     2.64000000000000E+0
2.64000000000000E+0      0.00000000000000E+0      0.00000000000000E+0
0.00000000000000E+0      0.00000000000000E+0
   BmDistLoadG             10     220      Z      1     2.64000000000000E+0
2.64000000000000E+0      0.00000000000000E+0      0.00000000000000E+0
0.00000000000000E+0      0.00000000000000E+0
   BmDistLoadG             10     221      Z      1     2.64000000000000E+0
2.64000000000000E+0      0.00000000000000E+0      0.00000000000000E+0
0.00000000000000E+0      0.00000000000000E+0
   BmDistLoadG             10     222      Z      1     2.64000000000000E+0
2.64000000000000E+0      0.00000000000000E+0      0.00000000000000E+0
0.00000000000000E+0      0.00000000000000E+0
   BmDistLoadG             10     223      Z      1     2.64000000000000E+0
2.64000000000000E+0      0.00000000000000E+0      0.00000000000000E+0
0.00000000000000E+0      0.00000000000000E+0
   BmDistLoadG             10     224      Z      1     2.64000000000000E+0
2.64000000000000E+0      0.00000000000000E+0      0.00000000000000E+0
0.00000000000000E+0      0.00000000000000E+0
   BmDistLoadG             10     225      Z      1     2.64000000000000E+0
2.64000000000000E+0      0.00000000000000E+0      0.00000000000000E+0
0.00000000000000E+0      0.00000000000000E+0
   BmDistLoadG             10     226      Z      1     2.64000000000000E+0
2.64000000000000E+0      0.00000000000000E+0      0.00000000000000E+0
0.00000000000000E+0      0.00000000000000E+0
   BmDistLoadG             10     227      Z      1     2.64000000000000E+0
2.64000000000000E+0      0.00000000000000E+0      0.00000000000000E+0
0.00000000000000E+0      0.00000000000000E+0
   BmDistLoadG             10     228      Z      1     2.64000000000000E+0
2.64000000000000E+0      0.00000000000000E+0      0.00000000000000E+0
0.00000000000000E+0      0.00000000000000E+0
   BmDistLoadG             10     229      Z      1     2.64000000000000E+0
2.64000000000000E+0      0.00000000000000E+0      0.00000000000000E+0
0.00000000000000E+0      0.00000000000000E+0
   BmDistLoadG             10     230      Z      1     2.64000000000000E+0
2.64000000000000E+0      0.00000000000000E+0      0.00000000000000E+0
0.00000000000000E+0      0.00000000000000E+0
   BmDistLoadG             10     231      Z      1     2.64000000000000E+0
2.64000000000000E+0      0.00000000000000E+0      0.00000000000000E+0
0.00000000000000E+0      0.00000000000000E+0
   BmDistLoadG             10     232      Z      1     2.64000000000000E+0
2.64000000000000E+0      0.00000000000000E+0      0.00000000000000E+0
0.00000000000000E+0      0.00000000000000E+0
   BmDistLoadG             10     233      Z      1     2.64000000000000E+0
2.64000000000000E+0      0.00000000000000E+0      0.00000000000000E+0
0.00000000000000E+0      0.00000000000000E+0
   BmDistLoadG             10     234      Z      1     2.64000000000000E+0
2.64000000000000E+0      0.00000000000000E+0      0.00000000000000E+0
0.00000000000000E+0      0.00000000000000E+0
   BmDistLoadG             10     235      Z      1     2.64000000000000E+0
```

```
2.64000000000000E+0       0.00000000000000E+0       0.00000000000000E+0
0.00000000000000E+0       0.00000000000000E+0
   BmDistLoadG              10      236       Z       1      2.64000000000000E+0
2.64000000000000E+0       0.00000000000000E+0       0.00000000000000E+0
0.00000000000000E+0       0.00000000000000E+0
   BmDistLoadG              10      237       Z       1      2.64000000000000E+0
2.64000000000000E+0       0.00000000000000E+0       0.00000000000000E+0
0.00000000000000E+0       0.00000000000000E+0
   BmDistLoadG              10      238       Z       1      2.64000000000000E+0
2.64000000000000E+0       0.00000000000000E+0       0.00000000000000E+0
0.00000000000000E+0       0.00000000000000E+0
   BmDistLoadG              10      239       Z       1      2.64000000000000E+0
2.64000000000000E+0       0.00000000000000E+0       0.00000000000000E+0
0.00000000000000E+0       0.00000000000000E+0
   BmDistLoadG              10      240       Z       1      2.64000000000000E+0
2.64000000000000E+0       0.00000000000000E+0       0.00000000000000E+0
0.00000000000000E+0       0.00000000000000E+0
   BmDistLoadG              10      241       Z       1      2.64000000000000E+0
2.64000000000000E+0       0.00000000000000E+0       0.00000000000000E+0
0.00000000000000E+0       0.00000000000000E+0
   BmDistLoadG              10      242       Z       1      2.64000000000000E+0
2.64000000000000E+0       0.00000000000000E+0       0.00000000000000E+0
0.00000000000000E+0       0.00000000000000E+0
   BmDistLoadG              10      243       Z       1      2.64000000000000E+0
2.64000000000000E+0       0.00000000000000E+0       0.00000000000000E+0
0.00000000000000E+0       0.00000000000000E+0
   BmDistLoadG              10      244       Z       1      2.64000000000000E+0
2.64000000000000E+0       0.00000000000000E+0       0.00000000000000E+0
0.00000000000000E+0       0.00000000000000E+0
   BmDistLoadG              10      245       Z       1      2.64000000000000E+0
2.64000000000000E+0       0.00000000000000E+0       0.00000000000000E+0
0.00000000000000E+0       0.00000000000000E+0
   BmDistLoadG              10      246       Z       1      2.64000000000000E+0
2.64000000000000E+0       0.00000000000000E+0       0.00000000000000E+0
0.00000000000000E+0       0.00000000000000E+0
   BmDistLoadG              10      247       Z       1      2.64000000000000E+0
2.64000000000000E+0       0.00000000000000E+0       0.00000000000000E+0
0.00000000000000E+0       0.00000000000000E+0
   BmDistLoadG              10      248       Z       1      2.64000000000000E+0
2.64000000000000E+0       0.00000000000000E+0       0.00000000000000E+0
0.00000000000000E+0       0.00000000000000E+0
   BmDistLoadG              10      249       Z       1      2.64000000000000E+0
2.64000000000000E+0       0.00000000000000E+0       0.00000000000000E+0
0.00000000000000E+0       0.00000000000000E+0
   BmDistLoadG              10      250       Z       1      2.64000000000000E+0
2.64000000000000E+0       0.00000000000000E+0       0.00000000000000E+0
0.00000000000000E+0       0.00000000000000E+0
   BmDistLoadG              10      251       Z       1      2.64000000000000E+0
2.64000000000000E+0       0.00000000000000E+0       0.00000000000000E+0
0.00000000000000E+0       0.00000000000000E+0
   BmDistLoadG              10      252       Z       1      2.64000000000000E+0
2.64000000000000E+0       0.00000000000000E+0       0.00000000000000E+0
0.00000000000000E+0       0.00000000000000E+0
   BmDistLoadG              10      253       Z       1      2.64000000000000E+0
```

```
2.64000000000000E+0      0.00000000000000E+0      0.00000000000000E+0
0.00000000000000E+0      0.00000000000000E+0
   BmDistLoadG             10     254      Z      1     2.64000000000000E+0
2.64000000000000E+0      0.00000000000000E+0      0.00000000000000E+0
0.00000000000000E+0      0.00000000000000E+0
   BmDistLoadG             10     255      Z      1     2.64000000000000E+0
2.64000000000000E+0      0.00000000000000E+0      0.00000000000000E+0
0.00000000000000E+0      0.00000000000000E+0
   BmDistLoadG             10     256      Z      1     2.64000000000000E+0
2.64000000000000E+0      0.00000000000000E+0      0.00000000000000E+0
0.00000000000000E+0      0.00000000000000E+0
   BmDistLoadG             10     257      Z      1     2.64000000000000E+0
2.64000000000000E+0      0.00000000000000E+0      0.00000000000000E+0
0.00000000000000E+0      0.00000000000000E+0
   BmDistLoadG             10     258      Z      1     2.64000000000000E+0
2.64000000000000E+0      0.00000000000000E+0      0.00000000000000E+0
0.00000000000000E+0      0.00000000000000E+0
   BmDistLoadG             10     259      Z      1     2.64000000000000E+0
2.64000000000000E+0      0.00000000000000E+0      0.00000000000000E+0
0.00000000000000E+0      0.00000000000000E+0
   BmDistLoadG             10     260      Z      1     2.64000000000000E+0
2.64000000000000E+0      0.00000000000000E+0      0.00000000000000E+0
0.00000000000000E+0      0.00000000000000E+0
   BmDistLoadG             10     261      Z      1     2.64000000000000E+0
2.64000000000000E+0      0.00000000000000E+0      0.00000000000000E+0
0.00000000000000E+0      0.00000000000000E+0
   BmDistLoadG             10     262      Z      1     2.64000000000000E+0
2.64000000000000E+0      0.00000000000000E+0      0.00000000000000E+0
0.00000000000000E+0      0.00000000000000E+0
   BmDistLoadG             10     263      Z      1     2.64000000000000E+0
2.64000000000000E+0      0.00000000000000E+0      0.00000000000000E+0
0.00000000000000E+0      0.00000000000000E+0
   BmDistLoadG             10     264      Z      1     2.64000000000000E+0
2.64000000000000E+0      0.00000000000000E+0      0.00000000000000E+0
0.00000000000000E+0      0.00000000000000E+0
   BmDistLoadG             10     265      Z      1     2.64000000000000E+0
2.64000000000000E+0      0.00000000000000E+0      0.00000000000000E+0
0.00000000000000E+0      0.00000000000000E+0
   BmDistLoadG             10     266      Z      1     2.64000000000000E+0
2.64000000000000E+0      0.00000000000000E+0      0.00000000000000E+0
0.00000000000000E+0      0.00000000000000E+0
   BmDistLoadG             10     267      Z      1     2.64000000000000E+0
2.64000000000000E+0      0.00000000000000E+0      0.00000000000000E+0
0.00000000000000E+0      0.00000000000000E+0
   BmDistLoadG             10     268      Z      1     2.64000000000000E+0
2.64000000000000E+0      0.00000000000000E+0      0.00000000000000E+0
0.00000000000000E+0      0.00000000000000E+0
   BmDistLoadG             10     269      Z      1     2.64000000000000E+0
2.64000000000000E+0      0.00000000000000E+0      0.00000000000000E+0
0.00000000000000E+0      0.00000000000000E+0
   BmDistLoadG             10     270      Z      1     2.64000000000000E+0
2.64000000000000E+0      0.00000000000000E+0      0.00000000000000E+0
0.00000000000000E+0      0.00000000000000E+0
   BmDistLoadG             10     271      Z      1     2.64000000000000E+0
```

```
2.64000000000000E+0      0.00000000000000E+0      0.00000000000000E+0
0.00000000000000E+0      0.00000000000000E+0
   BmDistLoadG             10     272      Z      1     2.64000000000000E+0
2.64000000000000E+0      0.00000000000000E+0      0.00000000000000E+0
0.00000000000000E+0      0.00000000000000E+0
   BmDistLoadG             10     273      Z      1     2.64000000000000E+0
2.64000000000000E+0      0.00000000000000E+0      0.00000000000000E+0
0.00000000000000E+0      0.00000000000000E+0
   BmDistLoadG             10     274      Z      1     2.64000000000000E+0
2.64000000000000E+0      0.00000000000000E+0      0.00000000000000E+0
0.00000000000000E+0      0.00000000000000E+0
   BmDistLoadG             10     275      Z      1     2.64000000000000E+0
2.64000000000000E+0      0.00000000000000E+0      0.00000000000000E+0
0.00000000000000E+0      0.00000000000000E+0
   BmDistLoadG             10     276      Z      1     2.64000000000000E+0
2.64000000000000E+0      0.00000000000000E+0      0.00000000000000E+0
0.00000000000000E+0      0.00000000000000E+0
   BmDistLoadG             10     277      Z      1     2.64000000000000E+0
2.64000000000000E+0      0.00000000000000E+0      0.00000000000000E+0
0.00000000000000E+0      0.00000000000000E+0
   BmDistLoadG             10     278      Z      1     2.64000000000000E+0
2.64000000000000E+0      0.00000000000000E+0      0.00000000000000E+0
0.00000000000000E+0      0.00000000000000E+0
   BmDistLoadG             10     279      Z      1     2.64000000000000E+0
2.64000000000000E+0      0.00000000000000E+0      0.00000000000000E+0
0.00000000000000E+0      0.00000000000000E+0
   BmDistLoadG             10     280      Z      1     2.64000000000000E+0
2.64000000000000E+0      0.00000000000000E+0      0.00000000000000E+0
0.00000000000000E+0      0.00000000000000E+0
   BmDistLoadG             10     281      Z      1     2.64000000000000E+0
2.64000000000000E+0      0.00000000000000E+0      0.00000000000000E+0
0.00000000000000E+0      0.00000000000000E+0
   BmDistLoadG             10     282      Z      1     2.64000000000000E+0
2.64000000000000E+0      0.00000000000000E+0      0.00000000000000E+0
0.00000000000000E+0      0.00000000000000E+0
   BmDistLoadG             10     283      Z      1     2.64000000000000E+0
2.64000000000000E+0      0.00000000000000E+0      0.00000000000000E+0
0.00000000000000E+0      0.00000000000000E+0
   BmDistLoadG             10     284      Z      1     2.64000000000000E+0
2.64000000000000E+0      0.00000000000000E+0      0.00000000000000E+0
0.00000000000000E+0      0.00000000000000E+0
   BmDistLoadG             10     285      Z      1     2.64000000000000E+0
2.64000000000000E+0      0.00000000000000E+0      0.00000000000000E+0
0.00000000000000E+0      0.00000000000000E+0
   BmDistLoadG             10     286      Z      1     2.64000000000000E+0
2.64000000000000E+0      0.00000000000000E+0      0.00000000000000E+0
0.00000000000000E+0      0.00000000000000E+0
   BmDistLoadG             10     287      Z      1     2.64000000000000E+0
2.64000000000000E+0      0.00000000000000E+0      0.00000000000000E+0
0.00000000000000E+0      0.00000000000000E+0
   BmDistLoadG             10     288      Z      1     2.64000000000000E+0
2.64000000000000E+0      0.00000000000000E+0      0.00000000000000E+0
0.00000000000000E+0      0.00000000000000E+0
   BmDistLoadG             10     289      Z      1     2.64000000000000E+0
```

```
2.64000000000000E+0      0.00000000000000E+0      0.00000000000000E+0
0.00000000000000E+0      0.00000000000000E+0
   BmDistLoadG             10     290      Z      1     2.64000000000000E+0
2.64000000000000E+0      0.00000000000000E+0      0.00000000000000E+0
0.00000000000000E+0      0.00000000000000E+0
   BmDistLoadG             10     291      Z      1     2.64000000000000E+0
2.64000000000000E+0      0.00000000000000E+0      0.00000000000000E+0
0.00000000000000E+0      0.00000000000000E+0
   BmDistLoadG             10     292      Z      1     2.64000000000000E+0
2.64000000000000E+0      0.00000000000000E+0      0.00000000000000E+0
0.00000000000000E+0      0.00000000000000E+0
   BmDistLoadG             10     293      Z      1     2.64000000000000E+0
2.64000000000000E+0      0.00000000000000E+0      0.00000000000000E+0
0.00000000000000E+0      0.00000000000000E+0
   BmDistLoadG             10     294      Z      1     2.64000000000000E+0
2.64000000000000E+0      0.00000000000000E+0      0.00000000000000E+0
0.00000000000000E+0      0.00000000000000E+0
   BmDistLoadG             10     295      Z      1     2.64000000000000E+0
2.64000000000000E+0      0.00000000000000E+0      0.00000000000000E+0
0.00000000000000E+0      0.00000000000000E+0
   BmDistLoadG             10     296      Z      1     2.64000000000000E+0
2.64000000000000E+0      0.00000000000000E+0      0.00000000000000E+0
0.00000000000000E+0      0.00000000000000E+0
   BmDistLoadG             10     297      Z      1     2.64000000000000E+0
2.64000000000000E+0      0.00000000000000E+0      0.00000000000000E+0
0.00000000000000E+0      0.00000000000000E+0
   BmDistLoadG             10     298      Z      1     2.64000000000000E+0
2.64000000000000E+0      0.00000000000000E+0      0.00000000000000E+0
0.00000000000000E+0      0.00000000000000E+0
   BmDistLoadG             10     299      Z      1     2.64000000000000E+0
2.64000000000000E+0      0.00000000000000E+0      0.00000000000000E+0
0.00000000000000E+0      0.00000000000000E+0
   BmDistLoadG             10     300      Z      1     2.64000000000000E+0
2.64000000000000E+0      0.00000000000000E+0      0.00000000000000E+0
0.00000000000000E+0      0.00000000000000E+0
   BmDistLoadG             10     301      Z      1     2.64000000000000E+0
2.64000000000000E+0      0.00000000000000E+0      0.00000000000000E+0
0.00000000000000E+0      0.00000000000000E+0
   BmDistLoadG             10     302      Z      1     2.64000000000000E+0
2.64000000000000E+0      0.00000000000000E+0      0.00000000000000E+0
0.00000000000000E+0      0.00000000000000E+0
   BmDistLoadG             10     303      Z      1     2.64000000000000E+0
2.64000000000000E+0      0.00000000000000E+0      0.00000000000000E+0
0.00000000000000E+0      0.00000000000000E+0
   BmDistLoadG             10     304      Z      1     2.64000000000000E+0
2.64000000000000E+0      0.00000000000000E+0      0.00000000000000E+0
0.00000000000000E+0      0.00000000000000E+0
   BmDistLoadG             10     305      Z      1     2.64000000000000E+0
2.64000000000000E+0      0.00000000000000E+0      0.00000000000000E+0
0.00000000000000E+0      0.00000000000000E+0
   BmDistLoadG             10     306      Z      1     2.64000000000000E+0
2.64000000000000E+0      0.00000000000000E+0      0.00000000000000E+0
0.00000000000000E+0      0.00000000000000E+0
   BmDistLoadG             10     307      Z      1     2.64000000000000E+0
```

```
2.64000000000000E+0      0.00000000000000E+0      0.00000000000000E+0
0.00000000000000E+0      0.00000000000000E+0
   BmDistLoadG             10     308      Z      1     2.64000000000000E+0
2.64000000000000E+0      0.00000000000000E+0      0.00000000000000E+0
0.00000000000000E+0      0.00000000000000E+0
   BmDistLoadG             10     309      Z      1     2.64000000000000E+0
2.64000000000000E+0      0.00000000000000E+0      0.00000000000000E+0
0.00000000000000E+0      0.00000000000000E+0
   BmDistLoadG             10     310      Z      1     2.64000000000000E+0
2.64000000000000E+0      0.00000000000000E+0      0.00000000000000E+0
0.00000000000000E+0      0.00000000000000E+0
   BmDistLoadG             10     311      Z      1     2.64000000000000E+0
2.64000000000000E+0      0.00000000000000E+0      0.00000000000000E+0
0.00000000000000E+0      0.00000000000000E+0
   BmDistLoadG             10     312      Z      1     2.64000000000000E+0
2.64000000000000E+0      0.00000000000000E+0      0.00000000000000E+0
0.00000000000000E+0      0.00000000000000E+0
   BmDistLoadG             10     313      Z      1     2.64000000000000E+0
2.64000000000000E+0      0.00000000000000E+0      0.00000000000000E+0
0.00000000000000E+0      0.00000000000000E+0
   BmDistLoadG             10     314      Z      1     2.64000000000000E+0
2.64000000000000E+0      0.00000000000000E+0      0.00000000000000E+0
0.00000000000000E+0      0.00000000000000E+0
   BmDistLoadG             10     315      Z      1     2.64000000000000E+0
2.64000000000000E+0      0.00000000000000E+0      0.00000000000000E+0
0.00000000000000E+0      0.00000000000000E+0
   BmDistLoadG             10     316      Z      1     2.64000000000000E+0
2.64000000000000E+0      0.00000000000000E+0      0.00000000000000E+0
0.00000000000000E+0      0.00000000000000E+0
   BmDistLoadG             10     317      Z      1     2.64000000000000E+0
2.64000000000000E+0      0.00000000000000E+0      0.00000000000000E+0
0.00000000000000E+0      0.00000000000000E+0
   BmDistLoadG             10     318      Z      1     2.64000000000000E+0
2.64000000000000E+0      0.00000000000000E+0      0.00000000000000E+0
0.00000000000000E+0      0.00000000000000E+0
   BmDistLoadG             10     319      Z      1     2.64000000000000E+0
2.64000000000000E+0      0.00000000000000E+0      0.00000000000000E+0
0.00000000000000E+0      0.00000000000000E+0
   BmDistLoadG             10     320      Z      1     2.64000000000000E+0
2.64000000000000E+0      0.00000000000000E+0      0.00000000000000E+0
0.00000000000000E+0      0.00000000000000E+0
   BmDistLoadG             10     321      Z      1     2.64000000000000E+0
2.64000000000000E+0      0.00000000000000E+0      0.00000000000000E+0
0.00000000000000E+0      0.00000000000000E+0
   BmDistLoadG             10     322      Z      1     2.64000000000000E+0
2.64000000000000E+0      0.00000000000000E+0      0.00000000000000E+0
0.00000000000000E+0      0.00000000000000E+0
   BmDistLoadG             10     323      Z      1     2.64000000000000E+0
2.64000000000000E+0      0.00000000000000E+0      0.00000000000000E+0
0.00000000000000E+0      0.00000000000000E+0
   BmDistLoadG             10     324      Z      1     2.64000000000000E+0
2.64000000000000E+0      0.00000000000000E+0      0.00000000000000E+0
0.00000000000000E+0      0.00000000000000E+0
   BmDistLoadG             10     325      Z      1     2.64000000000000E+0
```

```
2.64000000000000E+0      0.00000000000000E+0      0.00000000000000E+0
0.00000000000000E+0      0.00000000000000E+0
   BmDistLoadG             10     326      Z      1     2.64000000000000E+0
2.64000000000000E+0      0.00000000000000E+0      0.00000000000000E+0
0.00000000000000E+0      0.00000000000000E+0
   BmDistLoadG             10     327      Z      1     2.64000000000000E+0
2.64000000000000E+0      0.00000000000000E+0      0.00000000000000E+0
0.00000000000000E+0      0.00000000000000E+0
   BmDistLoadG             10     328      Z      1     2.64000000000000E+0
2.64000000000000E+0      0.00000000000000E+0      0.00000000000000E+0
0.00000000000000E+0      0.00000000000000E+0
   BmDistLoadG             10     329      Z      1     2.64000000000000E+0
2.64000000000000E+0      0.00000000000000E+0      0.00000000000000E+0
0.00000000000000E+0      0.00000000000000E+0
   BmDistLoadG             10     330      Z      1     2.64000000000000E+0
2.64000000000000E+0      0.00000000000000E+0      0.00000000000000E+0
0.00000000000000E+0      0.00000000000000E+0
   BmDistLoadG             10     331      Z      1     2.64000000000000E+0
2.64000000000000E+0      0.00000000000000E+0      0.00000000000000E+0
0.00000000000000E+0      0.00000000000000E+0
   BmDistLoadG             10     332      Z      1     2.64000000000000E+0
2.64000000000000E+0      0.00000000000000E+0      0.00000000000000E+0
0.00000000000000E+0      0.00000000000000E+0
   BmDistLoadG             10     333      Z      1     2.64000000000000E+0
2.64000000000000E+0      0.00000000000000E+0      0.00000000000000E+0
0.00000000000000E+0      0.00000000000000E+0
   BmDistLoadG             10     334      Z      1     2.64000000000000E+0
2.64000000000000E+0      0.00000000000000E+0      0.00000000000000E+0
0.00000000000000E+0      0.00000000000000E+0
   BmDistLoadG             10     335      Z      1     2.64000000000000E+0
2.64000000000000E+0      0.00000000000000E+0      0.00000000000000E+0
0.00000000000000E+0      0.00000000000000E+0
   BmDistLoadG             10     336      Z      1     2.64000000000000E+0
2.64000000000000E+0      0.00000000000000E+0      0.00000000000000E+0
0.00000000000000E+0      0.00000000000000E+0
   BmDistLoadG             10     337      Z      1     2.64000000000000E+0
2.64000000000000E+0      0.00000000000000E+0      0.00000000000000E+0
0.00000000000000E+0      0.00000000000000E+0
   BmDistLoadG             10     338      Z      1     2.64000000000000E+0
2.64000000000000E+0      0.00000000000000E+0      0.00000000000000E+0
0.00000000000000E+0      0.00000000000000E+0
   BmDistLoadG             10     339      Z      1     2.64000000000000E+0
2.64000000000000E+0      0.00000000000000E+0      0.00000000000000E+0
0.00000000000000E+0      0.00000000000000E+0
   BmDistLoadG             10     340      Z      1     2.64000000000000E+0
2.64000000000000E+0      0.00000000000000E+0      0.00000000000000E+0
0.00000000000000E+0      0.00000000000000E+0
   BmDistLoadG             10     341      Z      1     2.64000000000000E+0
2.64000000000000E+0      0.00000000000000E+0      0.00000000000000E+0
0.00000000000000E+0      0.00000000000000E+0
   BmDistLoadG             10     342      Z      1     2.64000000000000E+0
2.64000000000000E+0      0.00000000000000E+0      0.00000000000000E+0
0.00000000000000E+0      0.00000000000000E+0
   BmDistLoadG             10     343      Z      1     2.64000000000000E+0
```

2.64000000000000E+0 0.00000000000000E+0 0.00000000000000E+0
0.00000000000000E+0 0.00000000000000E+0
BmDistLoadG 10 344 Z 1 2.64000000000000E+0
2.64000000000000E+0 0.00000000000000E+0 0.00000000000000E+0
0.00000000000000E+0 0.00000000000000E+0
BmDistLoadG 10 345 Z 1 2.64000000000000E+0
2.64000000000000E+0 0.00000000000000E+0 0.00000000000000E+0
0.00000000000000E+0 0.00000000000000E+0
BmDistLoadG 10 346 Z 1 2.64000000000000E+0
2.64000000000000E+0 0.00000000000000E+0 0.00000000000000E+0
0.00000000000000E+0 0.00000000000000E+0
BmDistLoadG 10 347 Z 1 2.64000000000000E+0
2.64000000000000E+0 0.00000000000000E+0 0.00000000000000E+0
0.00000000000000E+0 0.00000000000000E+0
BmDistLoadG 10 348 Z 1 2.64000000000000E+0
2.64000000000000E+0 0.00000000000000E+0 0.00000000000000E+0
0.00000000000000E+0 0.00000000000000E+0
BmDistLoadG 10 349 Z 1 2.64000000000000E+0
2.64000000000000E+0 0.00000000000000E+0 0.00000000000000E+0
0.00000000000000E+0 0.00000000000000E+0
BmDistLoadG 10 350 Z 1 2.64000000000000E+0
2.64000000000000E+0 0.00000000000000E+0 0.00000000000000E+0
0.00000000000000E+0 0.00000000000000E+0
BmDistLoadG 10 351 Z 1 2.64000000000000E+0
2.64000000000000E+0 0.00000000000000E+0 0.00000000000000E+0
0.00000000000000E+0 0.00000000000000E+0
BmDistLoadG 10 352 Z 1 2.64000000000000E+0
2.64000000000000E+0 0.00000000000000E+0 0.00000000000000E+0
0.00000000000000E+0 0.00000000000000E+0
BmDistLoadG 10 353 Z 1 2.64000000000000E+0
2.64000000000000E+0 0.00000000000000E+0 0.00000000000000E+0
0.00000000000000E+0 0.00000000000000E+0
BmDistLoadG 10 354 Z 1 2.64000000000000E+0
2.64000000000000E+0 0.00000000000000E+0 0.00000000000000E+0
0.00000000000000E+0 0.00000000000000E+0
BmDistLoadG 10 355 Z 1 2.64000000000000E+0
2.64000000000000E+0 0.00000000000000E+0 0.00000000000000E+0
0.00000000000000E+0 0.00000000000000E+0
BmDistLoadG 10 356 Z 1 2.64000000000000E+0
2.64000000000000E+0 0.00000000000000E+0 0.00000000000000E+0
0.00000000000000E+0 0.00000000000000E+0
BmDistLoadG 10 357 Z 1 2.64000000000000E+0
2.64000000000000E+0 0.00000000000000E+0 0.00000000000000E+0
0.00000000000000E+0 0.00000000000000E+0
BmDistLoadG 10 358 Z 1 2.64000000000000E+0
2.64000000000000E+0 0.00000000000000E+0 0.00000000000000E+0
0.00000000000000E+0 0.00000000000000E+0
BmDistLoadG 10 359 Z 1 2.64000000000000E+0
2.64000000000000E+0 0.00000000000000E+0 0.00000000000000E+0
0.00000000000000E+0 0.00000000000000E+0
BmDistLoadG 10 360 Z 1 2.64000000000000E+0
2.64000000000000E+0 0.00000000000000E+0 0.00000000000000E+0
0.00000000000000E+0 0.00000000000000E+0
BmDistLoadG 10 361 Z 1 2.64000000000000E+0

```
2.64000000000000E+0        0.00000000000000E+0        0.00000000000000E+0
0.00000000000000E+0        0.00000000000000E+0
   BmDistLoadG               10      362       Z        1      2.64000000000000E+0
2.64000000000000E+0        0.00000000000000E+0        0.00000000000000E+0
0.00000000000000E+0        0.00000000000000E+0
   BmDistLoadG               10      363       Z        1      2.64000000000000E+0
2.64000000000000E+0        0.00000000000000E+0        0.00000000000000E+0
0.00000000000000E+0        0.00000000000000E+0
   BmDistLoadG               10      364       Z        1      2.64000000000000E+0
2.64000000000000E+0        0.00000000000000E+0        0.00000000000000E+0
0.00000000000000E+0        0.00000000000000E+0
   BmDistLoadG               10      365       Z        1      2.64000000000000E+0
2.64000000000000E+0        0.00000000000000E+0        0.00000000000000E+0
0.00000000000000E+0        0.00000000000000E+0
   BmDistLoadG               10      366       Z        1      2.64000000000000E+0
2.64000000000000E+0        0.00000000000000E+0        0.00000000000000E+0
0.00000000000000E+0        0.00000000000000E+0
   BmDistLoadG               10      367       Z        1      2.64000000000000E+0
2.64000000000000E+0        0.00000000000000E+0        0.00000000000000E+0
0.00000000000000E+0        0.00000000000000E+0
   BmDistLoadG               10      368       Z        1      2.64000000000000E+0
2.64000000000000E+0        0.00000000000000E+0        0.00000000000000E+0
0.00000000000000E+0        0.00000000000000E+0
   BmDistLoadG               10      369       Z        1      2.64000000000000E+0
2.64000000000000E+0        0.00000000000000E+0        0.00000000000000E+0
0.00000000000000E+0        0.00000000000000E+0
   BmDistLoadG               10      370       Z        1      2.64000000000000E+0
2.64000000000000E+0        0.00000000000000E+0        0.00000000000000E+0
0.00000000000000E+0        0.00000000000000E+0
   BmDistLoadG               10      371       Z        1      2.64000000000000E+0
2.64000000000000E+0        0.00000000000000E+0        0.00000000000000E+0
0.00000000000000E+0        0.00000000000000E+0
   BmDistLoadG               10      372       Z        1      2.64000000000000E+0
2.64000000000000E+0        0.00000000000000E+0        0.00000000000000E+0
0.00000000000000E+0        0.00000000000000E+0
   BmDistLoadG               10      373       Z        1      2.64000000000000E+0
2.64000000000000E+0        0.00000000000000E+0        0.00000000000000E+0
0.00000000000000E+0        0.00000000000000E+0
   BmDistLoadG               10      374       Z        1      2.64000000000000E+0
2.64000000000000E+0        0.00000000000000E+0        0.00000000000000E+0
0.00000000000000E+0        0.00000000000000E+0
   BmDistLoadG               10      375       Z        1      2.64000000000000E+0
2.64000000000000E+0        0.00000000000000E+0        0.00000000000000E+0
0.00000000000000E+0        0.00000000000000E+0
   BmDistLoadG               10      376       Z        1      2.64000000000000E+0
2.64000000000000E+0        0.00000000000000E+0        0.00000000000000E+0
0.00000000000000E+0        0.00000000000000E+0
   BmDistLoadG               10      377       Z        1      2.64000000000000E+0
2.64000000000000E+0        0.00000000000000E+0        0.00000000000000E+0
0.00000000000000E+0        0.00000000000000E+0
   BmDistLoadG               10      378       Z        1      2.64000000000000E+0
2.64000000000000E+0        0.00000000000000E+0        0.00000000000000E+0
0.00000000000000E+0        0.00000000000000E+0
   BmDistLoadG               10      379       Z        1      2.64000000000000E+0
```

```
2.64000000000000E+0      0.00000000000000E+0      0.00000000000000E+0
0.00000000000000E+0      0.00000000000000E+0
   BmDistLoadG             10      380      Z      1      2.64000000000000E+0
2.64000000000000E+0      0.00000000000000E+0      0.00000000000000E+0
0.00000000000000E+0      0.00000000000000E+0
   BmDistLoadG             10      381      Z      1      2.64000000000000E+0
2.64000000000000E+0      0.00000000000000E+0      0.00000000000000E+0
0.00000000000000E+0      0.00000000000000E+0
   BmDistLoadG             10      382      Z      1      2.64000000000000E+0
2.64000000000000E+0      0.00000000000000E+0      0.00000000000000E+0
0.00000000000000E+0      0.00000000000000E+0
   BmDistLoadG             10      383      Z      1      2.64000000000000E+0
2.64000000000000E+0      0.00000000000000E+0      0.00000000000000E+0
0.00000000000000E+0      0.00000000000000E+0
   BmDistLoadG             10      384      Z      1      2.64000000000000E+0
2.64000000000000E+0      0.00000000000000E+0      0.00000000000000E+0
0.00000000000000E+0      0.00000000000000E+0
   BmDistLoadG             10      385      Z      1      2.64000000000000E+0
2.64000000000000E+0      0.00000000000000E+0      0.00000000000000E+0
0.00000000000000E+0      0.00000000000000E+0
   BmDistLoadG             10      386      Z      1      2.64000000000000E+0
2.64000000000000E+0      0.00000000000000E+0      0.00000000000000E+0
0.00000000000000E+0      0.00000000000000E+0
   BmDistLoadG             10      387      Z      1      2.64000000000000E+0
2.64000000000000E+0      0.00000000000000E+0      0.00000000000000E+0
0.00000000000000E+0      0.00000000000000E+0
   BmDistLoadG             10      388      Z      1      2.64000000000000E+0
2.64000000000000E+0      0.00000000000000E+0      0.00000000000000E+0
0.00000000000000E+0      0.00000000000000E+0
   BmDistLoadG             10      389      Z      1      2.64000000000000E+0
2.64000000000000E+0      0.00000000000000E+0      0.00000000000000E+0
0.00000000000000E+0      0.00000000000000E+0
   BmDistLoadG             10      390      Z      1      2.64000000000000E+0
2.64000000000000E+0      0.00000000000000E+0      0.00000000000000E+0
0.00000000000000E+0      0.00000000000000E+0
   BmDistLoadG             10      391      Z      1      2.64000000000000E+0
2.64000000000000E+0      0.00000000000000E+0      0.00000000000000E+0
0.00000000000000E+0      0.00000000000000E+0
   BmDistLoadG             10      392      Z      1      2.64000000000000E+0
2.64000000000000E+0      0.00000000000000E+0      0.00000000000000E+0
0.00000000000000E+0      0.00000000000000E+0
   BmDistLoadG             10      393      Z      1      2.64000000000000E+0
2.64000000000000E+0      0.00000000000000E+0      0.00000000000000E+0
0.00000000000000E+0      0.00000000000000E+0
   BmDistLoadG             10      394      Z      1      2.64000000000000E+0
2.64000000000000E+0      0.00000000000000E+0      0.00000000000000E+0
0.00000000000000E+0      0.00000000000000E+0
   BmDistLoadG             10      395      Z      1      2.64000000000000E+0
2.64000000000000E+0      0.00000000000000E+0      0.00000000000000E+0
0.00000000000000E+0      0.00000000000000E+0
   BmDistLoadG             10      396      Z      1      2.64000000000000E+0
2.64000000000000E+0      0.00000000000000E+0      0.00000000000000E+0
0.00000000000000E+0      0.00000000000000E+0
   BmDistLoadG             10      397      Z      1      2.64000000000000E+0
```

```
2.64000000000000E+0       0.00000000000000E+0       0.00000000000000E+0
0.00000000000000E+0       0.00000000000000E+0
   BmDistLoadG              10      398       Z        1      2.64000000000000E+0
2.64000000000000E+0       0.00000000000000E+0       0.00000000000000E+0
0.00000000000000E+0       0.00000000000000E+0
   BmDistLoadG              10      399       Z        1      2.64000000000000E+0
2.64000000000000E+0       0.00000000000000E+0       0.00000000000000E+0
0.00000000000000E+0       0.00000000000000E+0
   BmDistLoadG              10      400       Z        1      2.64000000000000E+0
2.64000000000000E+0       0.00000000000000E+0       0.00000000000000E+0
0.00000000000000E+0       0.00000000000000E+0
   BmDistLoadG              10      401       Z        1      2.64000000000000E+0
2.64000000000000E+0       0.00000000000000E+0       0.00000000000000E+0
0.00000000000000E+0       0.00000000000000E+0
   BmDistLoadG              10      402       Z        1      2.64000000000000E+0
2.64000000000000E+0       0.00000000000000E+0       0.00000000000000E+0
0.00000000000000E+0       0.00000000000000E+0
   BmDistLoadG              10      403       Z        1      2.64000000000000E+0
2.64000000000000E+0       0.00000000000000E+0       0.00000000000000E+0
0.00000000000000E+0       0.00000000000000E+0
   BmDistLoadG              10      404       Z        1      2.64000000000000E+0
2.64000000000000E+0       0.00000000000000E+0       0.00000000000000E+0
0.00000000000000E+0       0.00000000000000E+0
   BmDistLoadG              10      405       Z        1      2.64000000000000E+0
2.64000000000000E+0       0.00000000000000E+0       0.00000000000000E+0
0.00000000000000E+0       0.00000000000000E+0
   BmDistLoadG              10      406       Z        1      2.64000000000000E+0
2.64000000000000E+0       0.00000000000000E+0       0.00000000000000E+0
0.00000000000000E+0       0.00000000000000E+0
   BmDistLoadG              10      407       Z        1      2.64000000000000E+0
2.64000000000000E+0       0.00000000000000E+0       0.00000000000000E+0
0.00000000000000E+0       0.00000000000000E+0
   BmDistLoadG              10      408       Z        1      2.64000000000000E+0
2.64000000000000E+0       0.00000000000000E+0       0.00000000000000E+0
0.00000000000000E+0       0.00000000000000E+0
   BmDistLoadG              10      409       Z        1      2.64000000000000E+0
2.64000000000000E+0       0.00000000000000E+0       0.00000000000000E+0
0.00000000000000E+0       0.00000000000000E+0
   BmDistLoadG              10      410       Z        1      2.64000000000000E+0
2.64000000000000E+0       0.00000000000000E+0       0.00000000000000E+0
0.00000000000000E+0       0.00000000000000E+0
   BmDistLoadG              10      411       Z        1      2.64000000000000E+0
2.64000000000000E+0       0.00000000000000E+0       0.00000000000000E+0
0.00000000000000E+0       0.00000000000000E+0
   BmDistLoadG              10      412       Z        1      2.64000000000000E+0
2.64000000000000E+0       0.00000000000000E+0       0.00000000000000E+0
0.00000000000000E+0       0.00000000000000E+0
   BmDistLoadG              10      413       Z        1      2.64000000000000E+0
2.64000000000000E+0       0.00000000000000E+0       0.00000000000000E+0
0.00000000000000E+0       0.00000000000000E+0
   BmDistLoadG              10      414       Z        1      2.64000000000000E+0
2.64000000000000E+0       0.00000000000000E+0       0.00000000000000E+0
0.00000000000000E+0       0.00000000000000E+0
   BmDistLoadG              10      415       Z        1      2.64000000000000E+0
```

```
2.64000000000000E+0       0.00000000000000E+0       0.00000000000000E+0
0.00000000000000E+0       0.00000000000000E+0
   BmDistLoadG              10      416       Z        1      2.64000000000000E+0
2.64000000000000E+0       0.00000000000000E+0       0.00000000000000E+0
0.00000000000000E+0       0.00000000000000E+0
   BmDistLoadG              10      417       Z        1      2.64000000000000E+0
2.64000000000000E+0       0.00000000000000E+0       0.00000000000000E+0
0.00000000000000E+0       0.00000000000000E+0
   BmDistLoadG              10      418       Z        1      2.64000000000000E+0
2.64000000000000E+0       0.00000000000000E+0       0.00000000000000E+0
0.00000000000000E+0       0.00000000000000E+0
   BmDistLoadG              10      419       Z        1      2.64000000000000E+0
2.64000000000000E+0       0.00000000000000E+0       0.00000000000000E+0
0.00000000000000E+0       0.00000000000000E+0
   BmDistLoadG              10      420       Z        1      2.64000000000000E+0
2.64000000000000E+0       0.00000000000000E+0       0.00000000000000E+0
0.00000000000000E+0       0.00000000000000E+0
   BmDistLoadG              10      421       Z        1      2.64000000000000E+0
2.64000000000000E+0       0.00000000000000E+0       0.00000000000000E+0
0.00000000000000E+0       0.00000000000000E+0
   BmDistLoadG              10      422       Z        1      2.64000000000000E+0
2.64000000000000E+0       0.00000000000000E+0       0.00000000000000E+0
0.00000000000000E+0       0.00000000000000E+0
   BmDistLoadG              10      423       Z        1      2.64000000000000E+0
2.64000000000000E+0       0.00000000000000E+0       0.00000000000000E+0
0.00000000000000E+0       0.00000000000000E+0
   BmDistLoadG              10      424       Z        1      2.64000000000000E+0
2.64000000000000E+0       0.00000000000000E+0       0.00000000000000E+0
0.00000000000000E+0       0.00000000000000E+0
   BmDistLoadG              10      425       Z        1      2.64000000000000E+0
2.64000000000000E+0       0.00000000000000E+0       0.00000000000000E+0
0.00000000000000E+0       0.00000000000000E+0
   BmDistLoadG              10      426       Z        1      2.64000000000000E+0
2.64000000000000E+0       0.00000000000000E+0       0.00000000000000E+0
0.00000000000000E+0       0.00000000000000E+0
   BmDistLoadG              10      427       Z        1      2.64000000000000E+0
2.64000000000000E+0       0.00000000000000E+0       0.00000000000000E+0
0.00000000000000E+0       0.00000000000000E+0
   BmDistLoadG              10      428       Z        1      2.64000000000000E+0
2.64000000000000E+0       0.00000000000000E+0       0.00000000000000E+0
0.00000000000000E+0       0.00000000000000E+0
   BmDistLoadG              10      429       Z        1      2.64000000000000E+0
2.64000000000000E+0       0.00000000000000E+0       0.00000000000000E+0
0.00000000000000E+0       0.00000000000000E+0
   BmDistLoadG              10      430       Z        1      2.64000000000000E+0
2.64000000000000E+0       0.00000000000000E+0       0.00000000000000E+0
0.00000000000000E+0       0.00000000000000E+0
   BmDistLoadG              10      431       Z        1      2.64000000000000E+0
2.64000000000000E+0       0.00000000000000E+0       0.00000000000000E+0
0.00000000000000E+0       0.00000000000000E+0
   BmDistLoadG              10      432       Z        1      2.64000000000000E+0
2.64000000000000E+0       0.00000000000000E+0       0.00000000000000E+0
0.00000000000000E+0       0.00000000000000E+0
   BmDistLoadG              10      433       Z        1      2.64000000000000E+0
```

2.64000000000000E+0 0.00000000000000E+0 0.00000000000000E+0
0.00000000000000E+0 0.00000000000000E+0
BmDistLoadG 10 434 Y 1 -1.20000000000000E+0
-1.20000000000000E+0 0.00000000000000E+0 0.00000000000000E+0
0.00000000000000E+0 0.00000000000000E+0
BmDistLoadG 10 435 Y 1 -1.20000000000000E+0
-1.20000000000000E+0 0.00000000000000E+0 0.00000000000000E+0
0.00000000000000E+0 0.00000000000000E+0
BmDistLoadG 10 436 Y 1 -1.20000000000000E+0
-1.20000000000000E+0 0.00000000000000E+0 0.00000000000000E+0
0.00000000000000E+0 0.00000000000000E+0
BmDistLoadG 10 437 Y 1 -1.20000000000000E+0
-1.20000000000000E+0 0.00000000000000E+0 0.00000000000000E+0
0.00000000000000E+0 0.00000000000000E+0
BmDistLoadG 10 438 Y 1 -1.20000000000000E+0
-1.20000000000000E+0 0.00000000000000E+0 0.00000000000000E+0
0.00000000000000E+0 0.00000000000000E+0
BmDistLoadG 10 649 Z 1 1.32000000000000E+0
1.32000000000000E+0 0.00000000000000E+0 0.00000000000000E+0
0.00000000000000E+0 0.00000000000000E+0
BmDistLoadG 10 650 Z 1 1.32000000000000E+0
1.32000000000000E+0 0.00000000000000E+0 0.00000000000000E+0
0.00000000000000E+0 0.00000000000000E+0
BmDistLoadG 10 651 Z 1 1.32000000000000E+0
1.32000000000000E+0 0.00000000000000E+0 0.00000000000000E+0
0.00000000000000E+0 0.00000000000000E+0
BmDistLoadG 10 652 Z 1 1.32000000000000E+0
1.32000000000000E+0 0.00000000000000E+0 0.00000000000000E+0
0.00000000000000E+0 0.00000000000000E+0
BmDistLoadG 10 653 Z 1 2.64000000000000E+0
2.64000000000000E+0 0.00000000000000E+0 0.00000000000000E+0
0.00000000000000E+0 0.00000000000000E+0
BmDistLoadG 10 654 Z 1 2.64000000000000E+0
2.64000000000000E+0 0.00000000000000E+0 0.00000000000000E+0
0.00000000000000E+0 0.00000000000000E+0
BmDistLoadG 10 655 Z 1 2.64000000000000E+0
2.64000000000000E+0 0.00000000000000E+0 0.00000000000000E+0
0.00000000000000E+0 0.00000000000000E+0
BmDistLoadG 10 656 Z 1 2.64000000000000E+0
2.64000000000000E+0 0.00000000000000E+0 0.00000000000000E+0
0.00000000000000E+0 0.00000000000000E+0
BmDistLoadG 10 657 Z 1 2.64000000000000E+0
2.64000000000000E+0 0.00000000000000E+0 0.00000000000000E+0
0.00000000000000E+0 0.00000000000000E+0
BmDistLoadG 10 658 Z 1 2.64000000000000E+0
2.64000000000000E+0 0.00000000000000E+0 0.00000000000000E+0
0.00000000000000E+0 0.00000000000000E+0
BmDistLoadG 10 659 Z 1 2.64000000000000E+0
2.64000000000000E+0 0.00000000000000E+0 0.00000000000000E+0
0.00000000000000E+0 0.00000000000000E+0
BmDistLoadG 10 660 Z 1 2.64000000000000E+0
2.64000000000000E+0 0.00000000000000E+0 0.00000000000000E+0
0.00000000000000E+0 0.00000000000000E+0
BmDistLoadG 10 661 Z 1 2.64000000000000E+0

```
2.64000000000000E+0      0.00000000000000E+0      0.00000000000000E+0
0.00000000000000E+0      0.00000000000000E+0
   BmDistLoadG             10     662      Z      1     2.64000000000000E+0
2.64000000000000E+0      0.00000000000000E+0      0.00000000000000E+0
0.00000000000000E+0      0.00000000000000E+0
   BmDistLoadG             10     663      Z      1     2.64000000000000E+0
2.64000000000000E+0      0.00000000000000E+0      0.00000000000000E+0
0.00000000000000E+0      0.00000000000000E+0
   BmDistLoadG             10     664      Z      1     2.64000000000000E+0
2.64000000000000E+0      0.00000000000000E+0      0.00000000000000E+0
0.00000000000000E+0      0.00000000000000E+0
   BmDistLoadG             10     665      Z      1     2.64000000000000E+0
2.64000000000000E+0      0.00000000000000E+0      0.00000000000000E+0
0.00000000000000E+0      0.00000000000000E+0
   BmDistLoadG             10     666      Z      1     2.64000000000000E+0
2.64000000000000E+0      0.00000000000000E+0      0.00000000000000E+0
0.00000000000000E+0      0.00000000000000E+0
   BmDistLoadG             10     667      Z      1     2.64000000000000E+0
2.64000000000000E+0      0.00000000000000E+0      0.00000000000000E+0
0.00000000000000E+0      0.00000000000000E+0
   BmDistLoadG             10     668      Z      1     2.64000000000000E+0
2.64000000000000E+0      0.00000000000000E+0      0.00000000000000E+0
0.00000000000000E+0      0.00000000000000E+0

/ ____________________________________________________________________________
/ NODE TEMPERATURES
/ T00 - DTu = +25°C
   NdTemp                  11       1      Fixed        0
2.50000000000000E+1
   NdTemp                  11       2      Fixed        0
2.50000000000000E+1
   NdTemp                  11       3      Fixed        0
2.50000000000000E+1
   NdTemp                  11       4      Fixed        0
2.50000000000000E+1
   NdTemp                  11       5      Fixed        0
2.50000000000000E+1
   NdTemp                  11       6      Fixed        0
2.50000000000000E+1
   NdTemp                  11       7      Fixed        0
2.50000000000000E+1
   NdTemp                  11       8      Fixed        0
2.50000000000000E+1
   NdTemp                  11       9      Fixed        0
2.50000000000000E+1
   NdTemp                  11      10      Fixed        0
2.50000000000000E+1
   NdTemp                  11      11      Fixed        0
2.50000000000000E+1
   NdTemp                  11      12      Fixed        0
2.50000000000000E+1
   NdTemp                  11      13      Fixed        0
2.50000000000000E+1
   NdTemp                  11      14      Fixed        0
```

2.50000000000000E+1
NdTemp 11 15 Fixed 0
2.50000000000000E+1
NdTemp 11 16 Fixed 0
2.50000000000000E+1
NdTemp 11 17 Fixed 0
2.50000000000000E+1
NdTemp 11 18 Fixed 0
2.50000000000000E+1
NdTemp 11 19 Fixed 0
2.50000000000000E+1
NdTemp 11 20 Fixed 0
2.50000000000000E+1
NdTemp 11 21 Fixed 0
2.50000000000000E+1
NdTemp 11 22 Fixed 0
2.50000000000000E+1
NdTemp 11 23 Fixed 0
2.50000000000000E+1
NdTemp 11 24 Fixed 0
2.50000000000000E+1
NdTemp 11 25 Fixed 0
2.50000000000000E+1
NdTemp 11 26 Fixed 0
2.50000000000000E+1
NdTemp 11 27 Fixed 0
2.50000000000000E+1
NdTemp 11 28 Fixed 0
2.50000000000000E+1
NdTemp 11 29 Fixed 0
2.50000000000000E+1
NdTemp 11 30 Fixed 0
2.50000000000000E+1
NdTemp 11 31 Fixed 0
2.50000000000000E+1
NdTemp 11 32 Fixed 0
2.50000000000000E+1
NdTemp 11 33 Fixed 0
2.50000000000000E+1
NdTemp 11 34 Fixed 0
2.50000000000000E+1
NdTemp 11 35 Fixed 0
2.50000000000000E+1
NdTemp 11 36 Fixed 0
2.50000000000000E+1
NdTemp 11 37 Fixed 0
2.50000000000000E+1
NdTemp 11 38 Fixed 0
2.50000000000000E+1
NdTemp 11 39 Fixed 0
2.50000000000000E+1
NdTemp 11 40 Fixed 0
2.50000000000000E+1
NdTemp 11 41 Fixed 0

2.50000000000000E+1
NdTemp 11 42 Fixed 0
2.50000000000000E+1
NdTemp 11 43 Fixed 0
2.50000000000000E+1
NdTemp 11 44 Fixed 0
2.50000000000000E+1
NdTemp 11 45 Fixed 0
2.50000000000000E+1
NdTemp 11 46 Fixed 0
2.50000000000000E+1
NdTemp 11 47 Fixed 0
2.50000000000000E+1
NdTemp 11 48 Fixed 0
2.50000000000000E+1
NdTemp 11 49 Fixed 0
2.50000000000000E+1
NdTemp 11 50 Fixed 0
2.50000000000000E+1
NdTemp 11 51 Fixed 0
2.50000000000000E+1
NdTemp 11 52 Fixed 0
2.50000000000000E+1
NdTemp 11 53 Fixed 0
2.50000000000000E+1
NdTemp 11 54 Fixed 0
2.50000000000000E+1
NdTemp 11 55 Fixed 0
2.50000000000000E+1
NdTemp 11 56 Fixed 0
2.50000000000000E+1
NdTemp 11 57 Fixed 0
2.50000000000000E+1
NdTemp 11 58 Fixed 0
2.50000000000000E+1
NdTemp 11 59 Fixed 0
2.50000000000000E+1
NdTemp 11 60 Fixed 0
2.50000000000000E+1
NdTemp 11 61 Fixed 0
2.50000000000000E+1
NdTemp 11 62 Fixed 0
2.50000000000000E+1
NdTemp 11 63 Fixed 0
2.50000000000000E+1
NdTemp 11 64 Fixed 0
2.50000000000000E+1
NdTemp 11 65 Fixed 0
2.50000000000000E+1
NdTemp 11 66 Fixed 0
2.50000000000000E+1
NdTemp 11 67 Fixed 0
2.50000000000000E+1
NdTemp 11 68 Fixed 0

2.50000000000000E+1
NdTemp 11 69 Fixed 0
2.50000000000000E+1
NdTemp 11 70 Fixed 0
2.50000000000000E+1
NdTemp 11 71 Fixed 0
2.50000000000000E+1
NdTemp 11 72 Fixed 0
2.50000000000000E+1
NdTemp 11 73 Fixed 0
2.50000000000000E+1
NdTemp 11 74 Fixed 0
2.50000000000000E+1
NdTemp 11 75 Fixed 0
2.50000000000000E+1
NdTemp 11 76 Fixed 0
2.50000000000000E+1
NdTemp 11 77 Fixed 0
2.50000000000000E+1
NdTemp 11 78 Fixed 0
2.50000000000000E+1
NdTemp 11 79 Fixed 0
2.50000000000000E+1
NdTemp 11 80 Fixed 0
2.50000000000000E+1
NdTemp 11 81 Fixed 0
2.50000000000000E+1
NdTemp 11 82 Fixed 0
2.50000000000000E+1
NdTemp 11 83 Fixed 0
2.50000000000000E+1
NdTemp 11 84 Fixed 0
2.50000000000000E+1
NdTemp 11 85 Fixed 0
2.50000000000000E+1
NdTemp 11 86 Fixed 0
2.50000000000000E+1
NdTemp 11 87 Fixed 0
2.50000000000000E+1
NdTemp 11 88 Fixed 0
2.50000000000000E+1
NdTemp 11 89 Fixed 0
2.50000000000000E+1
NdTemp 11 90 Fixed 0
2.50000000000000E+1
NdTemp 11 91 Fixed 0
2.50000000000000E+1
NdTemp 11 92 Fixed 0
2.50000000000000E+1
NdTemp 11 93 Fixed 0
2.50000000000000E+1
NdTemp 11 94 Fixed 0
2.50000000000000E+1
NdTemp 11 95 Fixed 0

2.50000000000000E+1
NdTemp 11 96 Fixed 0
2.50000000000000E+1
NdTemp 11 97 Fixed 0
2.50000000000000E+1
NdTemp 11 98 Fixed 0
2.50000000000000E+1
NdTemp 11 99 Fixed 0
2.50000000000000E+1
NdTemp 11 100 Fixed 0
2.50000000000000E+1
NdTemp 11 101 Fixed 0
2.50000000000000E+1
NdTemp 11 102 Fixed 0
2.50000000000000E+1
NdTemp 11 103 Fixed 0
2.50000000000000E+1
NdTemp 11 104 Fixed 0
2.50000000000000E+1
NdTemp 11 105 Fixed 0
2.50000000000000E+1
NdTemp 11 106 Fixed 0
2.50000000000000E+1
NdTemp 11 107 Fixed 0
2.50000000000000E+1
NdTemp 11 108 Fixed 0
2.50000000000000E+1
NdTemp 11 109 Fixed 0
2.50000000000000E+1
NdTemp 11 110 Fixed 0
2.50000000000000E+1
NdTemp 11 111 Fixed 0
2.50000000000000E+1
NdTemp 11 112 Fixed 0
2.50000000000000E+1
NdTemp 11 113 Fixed 0
2.50000000000000E+1
NdTemp 11 114 Fixed 0
2.50000000000000E+1
NdTemp 11 115 Fixed 0
2.50000000000000E+1
NdTemp 11 116 Fixed 0
2.50000000000000E+1
NdTemp 11 117 Fixed 0
2.50000000000000E+1
NdTemp 11 118 Fixed 0
2.50000000000000E+1
NdTemp 11 119 Fixed 0
2.50000000000000E+1
NdTemp 11 120 Fixed 0
2.50000000000000E+1
NdTemp 11 121 Fixed 0
2.50000000000000E+1
NdTemp 11 122 Fixed 0

2.50000000000000E+1
NdTemp 11 123 Fixed 0
2.50000000000000E+1
NdTemp 11 124 Fixed 0
2.50000000000000E+1
NdTemp 11 125 Fixed 0
2.50000000000000E+1
NdTemp 11 126 Fixed 0
2.50000000000000E+1
NdTemp 11 127 Fixed 0
2.50000000000000E+1
NdTemp 11 128 Fixed 0
2.50000000000000E+1
NdTemp 11 129 Fixed 0
2.50000000000000E+1
NdTemp 11 130 Fixed 0
2.50000000000000E+1
NdTemp 11 131 Fixed 0
2.50000000000000E+1
NdTemp 11 132 Fixed 0
2.50000000000000E+1
NdTemp 11 133 Fixed 0
2.50000000000000E+1
NdTemp 11 134 Fixed 0
2.50000000000000E+1
NdTemp 11 135 Fixed 0
2.50000000000000E+1
NdTemp 11 136 Fixed 0
2.50000000000000E+1
NdTemp 11 137 Fixed 0
2.50000000000000E+1
NdTemp 11 138 Fixed 0
2.50000000000000E+1
NdTemp 11 139 Fixed 0
2.50000000000000E+1
NdTemp 11 140 Fixed 0
2.50000000000000E+1
NdTemp 11 141 Fixed 0
2.50000000000000E+1
NdTemp 11 142 Fixed 0
2.50000000000000E+1
NdTemp 11 143 Fixed 0
2.50000000000000E+1
NdTemp 11 144 Fixed 0
2.50000000000000E+1
NdTemp 11 145 Fixed 0
2.50000000000000E+1
NdTemp 11 146 Fixed 0
2.50000000000000E+1
NdTemp 11 147 Fixed 0
2.50000000000000E+1
NdTemp 11 148 Fixed 0
2.50000000000000E+1
NdTemp 11 149 Fixed 0

2.50000000000000E+1
NdTemp 11 150 Fixed 0
2.50000000000000E+1
NdTemp 11 151 Fixed 0
2.50000000000000E+1
NdTemp 11 152 Fixed 0
2.50000000000000E+1
NdTemp 11 153 Fixed 0
2.50000000000000E+1
NdTemp 11 154 Fixed 0
2.50000000000000E+1
NdTemp 11 155 Fixed 0
2.50000000000000E+1
NdTemp 11 156 Fixed 0
2.50000000000000E+1
NdTemp 11 157 Fixed 0
2.50000000000000E+1
NdTemp 11 158 Fixed 0
2.50000000000000E+1
NdTemp 11 159 Fixed 0
2.50000000000000E+1
NdTemp 11 160 Fixed 0
2.50000000000000E+1
NdTemp 11 161 Fixed 0
2.50000000000000E+1
NdTemp 11 162 Fixed 0
2.50000000000000E+1
NdTemp 11 163 Fixed 0
2.50000000000000E+1
NdTemp 11 164 Fixed 0
2.50000000000000E+1
NdTemp 11 165 Fixed 0
2.50000000000000E+1
NdTemp 11 166 Fixed 0
2.50000000000000E+1
NdTemp 11 167 Fixed 0
2.50000000000000E+1
NdTemp 11 168 Fixed 0
2.50000000000000E+1
NdTemp 11 169 Fixed 0
2.50000000000000E+1
NdTemp 11 170 Fixed 0
2.50000000000000E+1
NdTemp 11 171 Fixed 0
2.50000000000000E+1
NdTemp 11 172 Fixed 0
2.50000000000000E+1
NdTemp 11 173 Fixed 0
2.50000000000000E+1
NdTemp 11 174 Fixed 0
2.50000000000000E+1
NdTemp 11 175 Fixed 0
2.50000000000000E+1
NdTemp 11 176 Fixed 0

2.50000000000000E+1
NdTemp 11 177 Fixed 0
2.50000000000000E+1
NdTemp 11 178 Fixed 0
2.50000000000000E+1
NdTemp 11 179 Fixed 0
2.50000000000000E+1
NdTemp 11 180 Fixed 0
2.50000000000000E+1
NdTemp 11 181 Fixed 0
2.50000000000000E+1
NdTemp 11 182 Fixed 0
2.50000000000000E+1
NdTemp 11 183 Fixed 0
2.50000000000000E+1
NdTemp 11 184 Fixed 0
2.50000000000000E+1
NdTemp 11 185 Fixed 0
2.50000000000000E+1
NdTemp 11 186 Fixed 0
2.50000000000000E+1
NdTemp 11 187 Fixed 0
2.50000000000000E+1
NdTemp 11 188 Fixed 0
2.50000000000000E+1
NdTemp 11 189 Fixed 0
2.50000000000000E+1
NdTemp 11 190 Fixed 0
2.50000000000000E+1
NdTemp 11 191 Fixed 0
2.50000000000000E+1
NdTemp 11 192 Fixed 0
2.50000000000000E+1
NdTemp 11 193 Fixed 0
2.50000000000000E+1
NdTemp 11 194 Fixed 0
2.50000000000000E+1
NdTemp 11 195 Fixed 0
2.50000000000000E+1
NdTemp 11 196 Fixed 0
2.50000000000000E+1
NdTemp 11 197 Fixed 0
2.50000000000000E+1
NdTemp 11 198 Fixed 0
2.50000000000000E+1
NdTemp 11 199 Fixed 0
2.50000000000000E+1
NdTemp 11 200 Fixed 0
2.50000000000000E+1
NdTemp 11 201 Fixed 0
2.50000000000000E+1
NdTemp 11 202 Fixed 0
2.50000000000000E+1
NdTemp 11 203 Fixed 0

2.50000000000000E+1
NdTemp 11 204 Fixed 0
2.50000000000000E+1
NdTemp 11 205 Fixed 0
2.50000000000000E+1
NdTemp 11 206 Fixed 0
2.50000000000000E+1
NdTemp 11 207 Fixed 0
2.50000000000000E+1
NdTemp 11 208 Fixed 0
2.50000000000000E+1
NdTemp 11 209 Fixed 0
2.50000000000000E+1
NdTemp 11 210 Fixed 0
2.50000000000000E+1
NdTemp 11 211 Fixed 0
2.50000000000000E+1
NdTemp 11 212 Fixed 0
2.50000000000000E+1
NdTemp 11 213 Fixed 0
2.50000000000000E+1
NdTemp 11 214 Fixed 0
2.50000000000000E+1
NdTemp 11 215 Fixed 0
2.50000000000000E+1
NdTemp 11 216 Fixed 0
2.50000000000000E+1
NdTemp 11 217 Fixed 0
2.50000000000000E+1
NdTemp 11 218 Fixed 0
2.50000000000000E+1
NdTemp 11 219 Fixed 0
2.50000000000000E+1
NdTemp 11 220 Fixed 0
2.50000000000000E+1
NdTemp 11 221 Fixed 0
2.50000000000000E+1
NdTemp 11 222 Fixed 0
2.50000000000000E+1
NdTemp 11 223 Fixed 0
2.50000000000000E+1
NdTemp 11 224 Fixed 0
2.50000000000000E+1
NdTemp 11 225 Fixed 0
2.50000000000000E+1
NdTemp 11 226 Fixed 0
2.50000000000000E+1
NdTemp 11 227 Fixed 0
2.50000000000000E+1
NdTemp 11 228 Fixed 0
2.50000000000000E+1
NdTemp 11 229 Fixed 0
2.50000000000000E+1
NdTemp 11 230 Fixed 0

2.50000000000000E+1
NdTemp 11 231 Fixed 0
2.50000000000000E+1
NdTemp 11 232 Fixed 0
2.50000000000000E+1
NdTemp 11 233 Fixed 0
2.50000000000000E+1
NdTemp 11 234 Fixed 0
2.50000000000000E+1
NdTemp 11 235 Fixed 0
2.50000000000000E+1
NdTemp 11 236 Fixed 0
2.50000000000000E+1
NdTemp 11 237 Fixed 0
2.50000000000000E+1
NdTemp 11 238 Fixed 0
2.50000000000000E+1
NdTemp 11 239 Fixed 0
2.50000000000000E+1
NdTemp 11 240 Fixed 0
2.50000000000000E+1
NdTemp 11 241 Fixed 0
2.50000000000000E+1
NdTemp 11 242 Fixed 0
2.50000000000000E+1
NdTemp 11 243 Fixed 0
2.50000000000000E+1
NdTemp 11 244 Fixed 0
2.50000000000000E+1
NdTemp 11 245 Fixed 0
2.50000000000000E+1
NdTemp 11 246 Fixed 0
2.50000000000000E+1
NdTemp 11 247 Fixed 0
2.50000000000000E+1
NdTemp 11 248 Fixed 0
2.50000000000000E+1
NdTemp 11 249 Fixed 0
2.50000000000000E+1
NdTemp 11 250 Fixed 0
2.50000000000000E+1
NdTemp 11 251 Fixed 0
2.50000000000000E+1
NdTemp 11 252 Fixed 0
2.50000000000000E+1
NdTemp 11 253 Fixed 0
2.50000000000000E+1
NdTemp 11 254 Fixed 0
2.50000000000000E+1
NdTemp 11 255 Fixed 0
2.50000000000000E+1
NdTemp 11 256 Fixed 0
2.50000000000000E+1
NdTemp 11 257 Fixed 0

2.50000000000000E+1				
NdTemp	11	258	Fixed	0
2.50000000000000E+1				
NdTemp	11	259	Fixed	0
2.50000000000000E+1				
NdTemp	11	260	Fixed	0
2.50000000000000E+1				
NdTemp	11	261	Fixed	0
2.50000000000000E+1				
NdTemp	11	262	Fixed	0
2.50000000000000E+1				
NdTemp	11	263	Fixed	0
2.50000000000000E+1				
NdTemp	11	264	Fixed	0
2.50000000000000E+1				
NdTemp	11	265	Fixed	0
2.50000000000000E+1				
NdTemp	11	266	Fixed	0
2.50000000000000E+1				
NdTemp	11	267	Fixed	0
2.50000000000000E+1				
NdTemp	11	268	Fixed	0
2.50000000000000E+1				
NdTemp	11	269	Fixed	0
2.50000000000000E+1				
NdTemp	11	270	Fixed	0
2.50000000000000E+1				
NdTemp	11	271	Fixed	0
2.50000000000000E+1				
NdTemp	11	272	Fixed	0
2.50000000000000E+1				
NdTemp	11	273	Fixed	0
2.50000000000000E+1				
NdTemp	11	274	Fixed	0
2.50000000000000E+1				
NdTemp	11	275	Fixed	0
2.50000000000000E+1				
NdTemp	11	276	Fixed	0
2.50000000000000E+1				
NdTemp	11	277	Fixed	0
2.50000000000000E+1				
NdTemp	11	278	Fixed	0
2.50000000000000E+1				
NdTemp	11	279	Fixed	0
2.50000000000000E+1				
NdTemp	11	280	Fixed	0
2.50000000000000E+1				
NdTemp	11	281	Fixed	0
2.50000000000000E+1				
NdTemp	11	282	Fixed	0
2.50000000000000E+1				
NdTemp	11	283	Fixed	0
2.50000000000000E+1				
NdTemp	11	284	Fixed	0

2.50000000000000E+1
NdTemp 11 285 Fixed 0
2.50000000000000E+1
NdTemp 11 286 Fixed 0
2.50000000000000E+1
NdTemp 11 287 Fixed 0
2.50000000000000E+1
NdTemp 11 288 Fixed 0
2.50000000000000E+1
NdTemp 11 289 Fixed 0
2.50000000000000E+1
NdTemp 11 290 Fixed 0
2.50000000000000E+1
NdTemp 11 291 Fixed 0
2.50000000000000E+1
NdTemp 11 292 Fixed 0
2.50000000000000E+1
NdTemp 11 293 Fixed 0
2.50000000000000E+1
NdTemp 11 294 Fixed 0
2.50000000000000E+1
NdTemp 11 295 Fixed 0
2.50000000000000E+1
NdTemp 11 296 Fixed 0
2.50000000000000E+1
NdTemp 11 297 Fixed 0
2.50000000000000E+1
NdTemp 11 298 Fixed 0
2.50000000000000E+1
NdTemp 11 299 Fixed 0
2.50000000000000E+1
NdTemp 11 300 Fixed 0
2.50000000000000E+1
NdTemp 11 301 Fixed 0
2.50000000000000E+1
NdTemp 11 302 Fixed 0
2.50000000000000E+1
NdTemp 11 303 Fixed 0
2.50000000000000E+1
NdTemp 11 304 Fixed 0
2.50000000000000E+1
NdTemp 11 305 Fixed 0
2.50000000000000E+1
NdTemp 11 306 Fixed 0
2.50000000000000E+1
NdTemp 11 307 Fixed 0
2.50000000000000E+1
NdTemp 11 308 Fixed 0
2.50000000000000E+1
NdTemp 11 309 Fixed 0
2.50000000000000E+1
NdTemp 11 310 Fixed 0
2.50000000000000E+1
NdTemp 11 311 Fixed 0

2.50000000000000E+1
NdTemp 11 312 Fixed 0
2.50000000000000E+1
NdTemp 11 313 Fixed 0
2.50000000000000E+1
NdTemp 11 314 Fixed 0
2.50000000000000E+1
NdTemp 11 315 Fixed 0
2.50000000000000E+1
NdTemp 11 316 Fixed 0
2.50000000000000E+1
NdTemp 11 317 Fixed 0
2.50000000000000E+1
NdTemp 11 318 Fixed 0
2.50000000000000E+1
NdTemp 11 319 Fixed 0
2.50000000000000E+1
NdTemp 11 320 Fixed 0
2.50000000000000E+1
NdTemp 11 321 Fixed 0
2.50000000000000E+1
NdTemp 11 322 Fixed 0
2.50000000000000E+1
NdTemp 11 323 Fixed 0
2.50000000000000E+1
NdTemp 11 324 Fixed 0
2.50000000000000E+1
NdTemp 11 325 Fixed 0
2.50000000000000E+1
NdTemp 11 326 Fixed 0
2.50000000000000E+1
NdTemp 11 327 Fixed 0
2.50000000000000E+1
NdTemp 11 328 Fixed 0
2.50000000000000E+1
NdTemp 11 329 Fixed 0
2.50000000000000E+1
NdTemp 11 330 Fixed 0
2.50000000000000E+1
NdTemp 11 331 Fixed 0
2.50000000000000E+1
NdTemp 11 332 Fixed 0
2.50000000000000E+1
NdTemp 11 333 Fixed 0
2.50000000000000E+1
NdTemp 11 334 Fixed 0
2.50000000000000E+1
NdTemp 11 335 Fixed 0
2.50000000000000E+1
NdTemp 11 336 Fixed 0
2.50000000000000E+1
NdTemp 11 337 Fixed 0
2.50000000000000E+1
NdTemp 11 338 Fixed 0

2.50000000000000E+1
NdTemp 11 339 Fixed 0
2.50000000000000E+1
NdTemp 11 340 Fixed 0
2.50000000000000E+1
NdTemp 11 341 Fixed 0
2.50000000000000E+1
NdTemp 11 342 Fixed 0
2.50000000000000E+1
NdTemp 11 343 Fixed 0
2.50000000000000E+1
NdTemp 11 344 Fixed 0
2.50000000000000E+1
NdTemp 11 345 Fixed 0
2.50000000000000E+1
NdTemp 11 346 Fixed 0
2.50000000000000E+1
NdTemp 11 347 Fixed 0
2.50000000000000E+1
NdTemp 11 348 Fixed 0
2.50000000000000E+1
NdTemp 11 349 Fixed 0
2.50000000000000E+1
NdTemp 11 350 Fixed 0
2.50000000000000E+1
NdTemp 11 351 Fixed 0
2.50000000000000E+1
NdTemp 11 352 Fixed 0
2.50000000000000E+1
NdTemp 11 353 Fixed 0
2.50000000000000E+1
NdTemp 11 354 Fixed 0
2.50000000000000E+1
NdTemp 11 355 Fixed 0
2.50000000000000E+1
NdTemp 11 356 Fixed 0
2.50000000000000E+1
NdTemp 11 357 Fixed 0
2.50000000000000E+1
NdTemp 11 358 Fixed 0
2.50000000000000E+1
NdTemp 11 359 Fixed 0
2.50000000000000E+1
NdTemp 11 360 Fixed 0
2.50000000000000E+1
NdTemp 11 361 Fixed 0
2.50000000000000E+1
NdTemp 11 362 Fixed 0
2.50000000000000E+1
NdTemp 11 363 Fixed 0
2.50000000000000E+1
NdTemp 11 364 Fixed 0
2.50000000000000E+1
NdTemp 11 365 Fixed 0

2.50000000000000E+1
NdTemp 11 366 Fixed 0
2.50000000000000E+1
NdTemp 11 367 Fixed 0
2.50000000000000E+1
NdTemp 11 368 Fixed 0
2.50000000000000E+1
NdTemp 11 369 Fixed 0
2.50000000000000E+1
NdTemp 11 370 Fixed 0
2.50000000000000E+1
NdTemp 11 371 Fixed 0
2.50000000000000E+1
NdTemp 11 372 Fixed 0
2.50000000000000E+1
NdTemp 11 373 Fixed 0
2.50000000000000E+1
NdTemp 11 374 Fixed 0
2.50000000000000E+1
NdTemp 11 375 Fixed 0
2.50000000000000E+1
NdTemp 11 376 Fixed 0
2.50000000000000E+1
NdTemp 11 377 Fixed 0
2.50000000000000E+1
NdTemp 11 378 Fixed 0
2.50000000000000E+1
NdTemp 11 379 Fixed 0
2.50000000000000E+1
NdTemp 11 380 Fixed 0
2.50000000000000E+1
NdTemp 11 381 Fixed 0
2.50000000000000E+1
NdTemp 11 382 Fixed 0
2.50000000000000E+1
NdTemp 11 383 Fixed 0
2.50000000000000E+1
NdTemp 11 384 Fixed 0
2.50000000000000E+1
NdTemp 11 385 Fixed 0
2.50000000000000E+1
NdTemp 11 386 Fixed 0
2.50000000000000E+1
NdTemp 11 387 Fixed 0
2.50000000000000E+1
NdTemp 11 388 Fixed 0
2.50000000000000E+1
NdTemp 11 389 Fixed 0
2.50000000000000E+1
NdTemp 11 390 Fixed 0
2.50000000000000E+1
NdTemp 11 391 Fixed 0
2.50000000000000E+1
NdTemp 11 392 Fixed 0

2.50000000000000E+1
NdTemp 11 393 Fixed 0
2.50000000000000E+1
NdTemp 11 394 Fixed 0
2.50000000000000E+1
NdTemp 11 395 Fixed 0
2.50000000000000E+1
NdTemp 11 396 Fixed 0
2.50000000000000E+1
NdTemp 11 397 Fixed 0
2.50000000000000E+1
NdTemp 11 398 Fixed 0
2.50000000000000E+1
NdTemp 11 399 Fixed 0
2.50000000000000E+1
NdTemp 11 400 Fixed 0
2.50000000000000E+1
NdTemp 11 401 Fixed 0
2.50000000000000E+1
NdTemp 11 402 Fixed 0
2.50000000000000E+1
NdTemp 11 403 Fixed 0
2.50000000000000E+1
NdTemp 11 404 Fixed 0
2.50000000000000E+1
NdTemp 11 405 Fixed 0
2.50000000000000E+1
NdTemp 11 406 Fixed 0
2.50000000000000E+1
NdTemp 11 407 Fixed 0
2.50000000000000E+1
NdTemp 11 408 Fixed 0
2.50000000000000E+1
NdTemp 11 409 Fixed 0
2.50000000000000E+1
NdTemp 11 410 Fixed 0
2.50000000000000E+1
NdTemp 11 411 Fixed 0
2.50000000000000E+1
NdTemp 11 412 Fixed 0
2.50000000000000E+1
NdTemp 11 413 Fixed 0
2.50000000000000E+1
NdTemp 11 414 Fixed 0
2.50000000000000E+1
NdTemp 11 415 Fixed 0
2.50000000000000E+1
NdTemp 11 416 Fixed 0
2.50000000000000E+1
NdTemp 11 417 Fixed 0
2.50000000000000E+1
NdTemp 11 418 Fixed 0
2.50000000000000E+1
NdTemp 11 419 Fixed 0

2.50000000000000E+1
NdTemp 11 420 Fixed 0
2.50000000000000E+1
NdTemp 11 421 Fixed 0
2.50000000000000E+1
NdTemp 11 422 Fixed 0
2.50000000000000E+1
NdTemp 11 423 Fixed 0
2.50000000000000E+1
NdTemp 11 424 Fixed 0
2.50000000000000E+1
NdTemp 11 425 Fixed 0
2.50000000000000E+1
NdTemp 11 426 Fixed 0
2.50000000000000E+1
NdTemp 11 427 Fixed 0
2.50000000000000E+1
NdTemp 11 428 Fixed 0
2.50000000000000E+1
NdTemp 11 429 Fixed 0
2.50000000000000E+1
NdTemp 11 430 Fixed 0
2.50000000000000E+1
NdTemp 11 431 Fixed 0
2.50000000000000E+1
NdTemp 11 432 Fixed 0
2.50000000000000E+1
NdTemp 11 433 Fixed 0
2.50000000000000E+1
NdTemp 11 434 Fixed 0
2.50000000000000E+1
NdTemp 11 435 Fixed 0
2.50000000000000E+1
NdTemp 11 436 Fixed 0
2.50000000000000E+1
NdTemp 11 437 Fixed 0
2.50000000000000E+1
NdTemp 11 438 Fixed 0
2.50000000000000E+1
NdTemp 11 439 Fixed 0
2.50000000000000E+1
NdTemp 11 440 Fixed 0
2.50000000000000E+1
NdTemp 11 441 Fixed 0
2.50000000000000E+1
NdTemp 11 442 Fixed 0
2.50000000000000E+1
NdTemp 11 443 Fixed 0
2.50000000000000E+1
NdTemp 11 444 Fixed 0
2.50000000000000E+1
NdTemp 11 445 Fixed 0
2.50000000000000E+1
NdTemp 11 446 Fixed 0

2.50000000000000E+1				
NdTemp	11	447	Fixed	0
2.50000000000000E+1				
NdTemp	11	448	Fixed	0
2.50000000000000E+1				
NdTemp	11	449	Fixed	0
2.50000000000000E+1				
NdTemp	11	450	Fixed	0
2.50000000000000E+1				
NdTemp	11	451	Fixed	0
2.50000000000000E+1				
NdTemp	11	452	Fixed	0
2.50000000000000E+1				
NdTemp	11	453	Fixed	0
2.50000000000000E+1				
NdTemp	11	454	Fixed	0
2.50000000000000E+1				
NdTemp	11	455	Fixed	0
2.50000000000000E+1				
NdTemp	11	456	Fixed	0
2.50000000000000E+1				
NdTemp	11	457	Fixed	0
2.50000000000000E+1				
NdTemp	11	458	Fixed	0
2.50000000000000E+1				
NdTemp	11	459	Fixed	0
2.50000000000000E+1				
NdTemp	11	460	Fixed	0
2.50000000000000E+1				
NdTemp	11	461	Fixed	0
2.50000000000000E+1				
NdTemp	11	462	Fixed	0
2.50000000000000E+1				
NdTemp	11	463	Fixed	0
2.50000000000000E+1				
NdTemp	11	464	Fixed	0
2.50000000000000E+1				
NdTemp	11	465	Fixed	0
2.50000000000000E+1				
NdTemp	11	466	Fixed	0
2.50000000000000E+1				
NdTemp	11	467	Fixed	0
2.50000000000000E+1				
NdTemp	11	468	Fixed	0
2.50000000000000E+1				
NdTemp	11	469	Fixed	0
2.50000000000000E+1				
NdTemp	11	470	Fixed	0
2.50000000000000E+1				
NdTemp	11	471	Fixed	0
2.50000000000000E+1				
NdTemp	11	472	Fixed	0
2.50000000000000E+1				
NdTemp	11	473	Fixed	0

2.50000000000000E+1				
NdTemp	11	474	Fixed	0
2.50000000000000E+1				
NdTemp	11	475	Fixed	0
2.50000000000000E+1				
NdTemp	11	476	Fixed	0
2.50000000000000E+1				
NdTemp	11	477	Fixed	0
2.50000000000000E+1				
NdTemp	11	478	Fixed	0
2.50000000000000E+1				
NdTemp	11	479	Fixed	0
2.50000000000000E+1				
NdTemp	11	480	Fixed	0
2.50000000000000E+1				
NdTemp	11	481	Fixed	0
2.50000000000000E+1				
NdTemp	11	482	Fixed	0
2.50000000000000E+1				
NdTemp	11	483	Fixed	0
2.50000000000000E+1				
NdTemp	11	484	Fixed	0
2.50000000000000E+1				
NdTemp	11	485	Fixed	0
2.50000000000000E+1				
NdTemp	11	486	Fixed	0
2.50000000000000E+1				
NdTemp	11	487	Fixed	0
2.50000000000000E+1				
NdTemp	11	488	Fixed	0
2.50000000000000E+1				
NdTemp	11	489	Fixed	0
2.50000000000000E+1				
NdTemp	11	490	Fixed	0
2.50000000000000E+1				
NdTemp	11	491	Fixed	0
2.50000000000000E+1				
NdTemp	11	492	Fixed	0
2.50000000000000E+1				
NdTemp	11	493	Fixed	0
2.50000000000000E+1				
NdTemp	11	494	Fixed	0
2.50000000000000E+1				
NdTemp	11	495	Fixed	0
2.50000000000000E+1				
NdTemp	11	496	Fixed	0
2.50000000000000E+1				
NdTemp	11	497	Fixed	0
2.50000000000000E+1				
NdTemp	11	498	Fixed	0
2.50000000000000E+1				
NdTemp	11	499	Fixed	0
2.50000000000000E+1				
NdTemp	11	500	Fixed	0

2.50000000000000E+1
NdTemp 11 501 Fixed 0
2.50000000000000E+1
NdTemp 11 502 Fixed 0
2.50000000000000E+1
NdTemp 11 503 Fixed 0
2.50000000000000E+1
NdTemp 11 504 Fixed 0
2.50000000000000E+1
NdTemp 11 505 Fixed 0
2.50000000000000E+1
NdTemp 11 506 Fixed 0
2.50000000000000E+1
NdTemp 11 507 Fixed 0
2.50000000000000E+1
NdTemp 11 508 Fixed 0
2.50000000000000E+1
NdTemp 11 509 Fixed 0
2.50000000000000E+1
NdTemp 11 510 Fixed 0
2.50000000000000E+1
NdTemp 11 511 Fixed 0
2.50000000000000E+1
NdTemp 11 512 Fixed 0
2.50000000000000E+1
NdTemp 11 513 Fixed 0
2.50000000000000E+1
NdTemp 11 514 Fixed 0
2.50000000000000E+1
NdTemp 11 515 Fixed 0
2.50000000000000E+1
NdTemp 11 516 Fixed 0
2.50000000000000E+1
NdTemp 11 517 Fixed 0
2.50000000000000E+1
NdTemp 11 518 Fixed 0
2.50000000000000E+1
NdTemp 11 519 Fixed 0
2.50000000000000E+1
NdTemp 11 520 Fixed 0
2.50000000000000E+1
NdTemp 11 521 Fixed 0
2.50000000000000E+1
NdTemp 11 522 Fixed 0
2.50000000000000E+1
NdTemp 11 523 Fixed 0
2.50000000000000E+1
NdTemp 11 524 Fixed 0
2.50000000000000E+1
NdTemp 11 525 Fixed 0
2.50000000000000E+1
NdTemp 11 526 Fixed 0
2.50000000000000E+1
NdTemp 11 527 Fixed 0

2.50000000000000E+1
NdTemp 11 528 Fixed 0
2.50000000000000E+1
NdTemp 11 529 Fixed 0
2.50000000000000E+1
NdTemp 11 530 Fixed 0
2.50000000000000E+1
NdTemp 11 531 Fixed 0
2.50000000000000E+1
NdTemp 11 532 Fixed 0
2.50000000000000E+1
NdTemp 11 533 Fixed 0
2.50000000000000E+1
NdTemp 11 534 Fixed 0
2.50000000000000E+1
NdTemp 11 535 Fixed 0
2.50000000000000E+1
NdTemp 11 536 Fixed 0
2.50000000000000E+1
NdTemp 11 537 Fixed 0
2.50000000000000E+1
NdTemp 11 538 Fixed 0
2.50000000000000E+1
NdTemp 11 539 Fixed 0
2.50000000000000E+1
NdTemp 11 540 Fixed 0
2.50000000000000E+1
NdTemp 11 541 Fixed 0
2.50000000000000E+1
NdTemp 11 542 Fixed 0
2.50000000000000E+1
NdTemp 11 543 Fixed 0
2.50000000000000E+1
NdTemp 11 544 Fixed 0
2.50000000000000E+1
NdTemp 11 545 Fixed 0
2.50000000000000E+1
NdTemp 11 546 Fixed 0
2.50000000000000E+1
NdTemp 11 547 Fixed 0
2.50000000000000E+1
NdTemp 11 548 Fixed 0
2.50000000000000E+1
NdTemp 11 549 Fixed 0
2.50000000000000E+1
NdTemp 11 550 Fixed 0
2.50000000000000E+1
NdTemp 11 551 Fixed 0
2.50000000000000E+1
NdTemp 11 552 Fixed 0
2.50000000000000E+1
NdTemp 11 553 Fixed 0
2.50000000000000E+1
NdTemp 11 554 Fixed 0

2.50000000000000E+1
NdTemp 11 555 Fixed 0
2.50000000000000E+1
NdTemp 11 556 Fixed 0
2.50000000000000E+1
NdTemp 11 557 Fixed 0
2.50000000000000E+1
NdTemp 11 558 Fixed 0
2.50000000000000E+1
NdTemp 11 559 Fixed 0
2.50000000000000E+1
NdTemp 11 560 Fixed 0
2.50000000000000E+1
NdTemp 11 561 Fixed 0
2.50000000000000E+1
NdTemp 11 562 Fixed 0
2.50000000000000E+1
NdTemp 11 563 Fixed 0
2.50000000000000E+1
NdTemp 11 564 Fixed 0
2.50000000000000E+1
NdTemp 11 565 Fixed 0
2.50000000000000E+1
NdTemp 11 566 Fixed 0
2.50000000000000E+1
NdTemp 11 567 Fixed 0
2.50000000000000E+1
NdTemp 11 568 Fixed 0
2.50000000000000E+1
NdTemp 11 569 Fixed 0
2.50000000000000E+1
NdTemp 11 570 Fixed 0
2.50000000000000E+1
NdTemp 11 571 Fixed 0
2.50000000000000E+1
NdTemp 11 572 Fixed 0
2.50000000000000E+1
NdTemp 11 573 Fixed 0
2.50000000000000E+1
NdTemp 11 574 Fixed 0
2.50000000000000E+1
NdTemp 11 575 Fixed 0
2.50000000000000E+1
NdTemp 11 576 Fixed 0
2.50000000000000E+1
NdTemp 11 577 Fixed 0
2.50000000000000E+1
NdTemp 11 578 Fixed 0
2.50000000000000E+1
NdTemp 11 579 Fixed 0
2.50000000000000E+1
NdTemp 11 580 Fixed 0
2.50000000000000E+1
NdTemp 11 581 Fixed 0

2.50000000000000E+1				
NdTemp	11	582	Fixed	0
2.50000000000000E+1				
NdTemp	11	583	Fixed	0
2.50000000000000E+1				
NdTemp	11	584	Fixed	0
2.50000000000000E+1				
NdTemp	11	585	Fixed	0
2.50000000000000E+1				
NdTemp	11	586	Fixed	0
2.50000000000000E+1				
NdTemp	11	587	Fixed	0
2.50000000000000E+1				
NdTemp	11	588	Fixed	0
2.50000000000000E+1				
NdTemp	11	589	Fixed	0
2.50000000000000E+1				
NdTemp	11	590	Fixed	0
2.50000000000000E+1				
NdTemp	11	591	Fixed	0
2.50000000000000E+1				
NdTemp	11	592	Fixed	0
2.50000000000000E+1				
NdTemp	11	593	Fixed	0
2.50000000000000E+1				
NdTemp	11	594	Fixed	0
2.50000000000000E+1				
NdTemp	11	595	Fixed	0
2.50000000000000E+1				
NdTemp	11	596	Fixed	0
2.50000000000000E+1				
NdTemp	11	597	Fixed	0
2.50000000000000E+1				
NdTemp	11	598	Fixed	0
2.50000000000000E+1				
NdTemp	11	599	Fixed	0
2.50000000000000E+1				
NdTemp	11	600	Fixed	0
2.50000000000000E+1				
NdTemp	11	601	Fixed	0
2.50000000000000E+1				
NdTemp	11	602	Fixed	0
2.50000000000000E+1				
NdTemp	11	603	Fixed	0
2.50000000000000E+1				
NdTemp	11	604	Fixed	0
2.50000000000000E+1				
NdTemp	11	605	Fixed	0
2.50000000000000E+1				
NdTemp	11	606	Fixed	0
2.50000000000000E+1				
NdTemp	11	607	Fixed	0
2.50000000000000E+1				
NdTemp	11	608	Fixed	0

2.50000000000000E+1				
NdTemp	11	609	Fixed	0
2.50000000000000E+1				
NdTemp	11	610	Fixed	0
2.50000000000000E+1				
NdTemp	11	611	Fixed	0
2.50000000000000E+1				
NdTemp	11	612	Fixed	0
2.50000000000000E+1				
NdTemp	11	613	Fixed	0
2.50000000000000E+1				
NdTemp	11	614	Fixed	0
2.50000000000000E+1				
NdTemp	11	615	Fixed	0
2.50000000000000E+1				
NdTemp	11	616	Fixed	0
2.50000000000000E+1				
NdTemp	11	617	Fixed	0
2.50000000000000E+1				
NdTemp	11	618	Fixed	0
2.50000000000000E+1				
NdTemp	11	619	Fixed	0
2.50000000000000E+1				
NdTemp	11	620	Fixed	0
2.50000000000000E+1				
NdTemp	11	621	Fixed	0
2.50000000000000E+1				
NdTemp	11	622	Fixed	0
2.50000000000000E+1				
NdTemp	11	623	Fixed	0
2.50000000000000E+1				
NdTemp	11	624	Fixed	0
2.50000000000000E+1				
NdTemp	11	625	Fixed	0
2.50000000000000E+1				
NdTemp	11	626	Fixed	0
2.50000000000000E+1				
NdTemp	11	627	Fixed	0
2.50000000000000E+1				
NdTemp	11	628	Fixed	0
2.50000000000000E+1				
NdTemp	11	629	Fixed	0
2.50000000000000E+1				
NdTemp	11	630	Fixed	0
2.50000000000000E+1				
NdTemp	11	631	Fixed	0
2.50000000000000E+1				
NdTemp	11	632	Fixed	0
2.50000000000000E+1				
NdTemp	11	633	Fixed	0
2.50000000000000E+1				
NdTemp	11	634	Fixed	0
2.50000000000000E+1				
NdTemp	11	635	Fixed	0

2.50000000000000E+1
NdTemp 11 636 Fixed 0
2.50000000000000E+1
NdTemp 11 637 Fixed 0
2.50000000000000E+1
NdTemp 11 638 Fixed 0
2.50000000000000E+1
NdTemp 11 639 Fixed 0
2.50000000000000E+1
NdTemp 11 640 Fixed 0
2.50000000000000E+1
NdTemp 11 641 Fixed 0
2.50000000000000E+1
NdTemp 11 642 Fixed 0
2.50000000000000E+1
NdTemp 11 643 Fixed 0
2.50000000000000E+1
NdTemp 11 644 Fixed 0
2.50000000000000E+1
NdTemp 11 645 Fixed 0
2.50000000000000E+1
NdTemp 11 646 Fixed 0
2.50000000000000E+1
NdTemp 11 647 Fixed 0
2.50000000000000E+1
NdTemp 11 648 Fixed 0
2.50000000000000E+1
NdTemp 11 649 Fixed 0
2.50000000000000E+1
NdTemp 11 650 Fixed 0
2.50000000000000E+1
NdTemp 11 651 Fixed 0
2.50000000000000E+1
NdTemp 11 652 Fixed 0
2.50000000000000E+1
NdTemp 11 653 Fixed 0
2.50000000000000E+1
NdTemp 11 654 Fixed 0
2.50000000000000E+1
NdTemp 11 655 Fixed 0
2.50000000000000E+1
NdTemp 11 656 Fixed 0
2.50000000000000E+1
NdTemp 11 657 Fixed 0
2.50000000000000E+1
NdTemp 11 658 Fixed 0
2.50000000000000E+1
NdTemp 11 659 Fixed 0
2.50000000000000E+1
NdTemp 11 660 Fixed 0
2.50000000000000E+1
NdTemp 11 661 Fixed 0
2.50000000000000E+1
NdTemp 11 662 Fixed 0

2.50000000000000E+1
NdTemp 11 663 Fixed 0
2.50000000000000E+1
NdTemp 11 664 Fixed 0
2.50000000000000E+1
NdTemp 11 665 Fixed 0
2.50000000000000E+1
NdTemp 11 666 Fixed 0
2.50000000000000E+1
NdTemp 11 667 Fixed 0
2.50000000000000E+1
NdTemp 11 668 Fixed 0
2.50000000000000E+1
NdTemp 11 669 Fixed 0
2.50000000000000E+1
NdTemp 11 670 Fixed 0
2.50000000000000E+1
NdTemp 11 671 Fixed 0
2.50000000000000E+1
NdTemp 11 672 Fixed 0
2.50000000000000E+1
NdTemp 11 673 Fixed 0
2.50000000000000E+1
NdTemp 11 674 Fixed 0
2.50000000000000E+1
NdTemp 11 675 Fixed 0
2.50000000000000E+1
NdTemp 11 676 Fixed 0
2.50000000000000E+1
NdTemp 11 677 Fixed 0
2.50000000000000E+1
NdTemp 11 678 Fixed 0
2.50000000000000E+1
NdTemp 11 679 Fixed 0
2.50000000000000E+1
NdTemp 11 680 Fixed 0
2.50000000000000E+1
NdTemp 11 681 Fixed 0
2.50000000000000E+1
NdTemp 11 682 Fixed 0
2.50000000000000E+1
NdTemp 11 683 Fixed 0
2.50000000000000E+1
NdTemp 11 684 Fixed 0
2.50000000000000E+1
NdTemp 11 685 Fixed 0
2.50000000000000E+1
NdTemp 11 686 Fixed 0
2.50000000000000E+1
NdTemp 11 687 Fixed 0
2.50000000000000E+1
NdTemp 11 688 Fixed 0
2.50000000000000E+1
NdTemp 11 689 Fixed 0

2.50000000000000E+1				
NdTemp	11	690	Fixed	0
2.50000000000000E+1				
NdTemp	11	691	Fixed	0
2.50000000000000E+1				
NdTemp	11	692	Fixed	0
2.50000000000000E+1				
NdTemp	11	693	Fixed	0
2.50000000000000E+1				
NdTemp	11	694	Fixed	0
2.50000000000000E+1				
NdTemp	11	695	Fixed	0
2.50000000000000E+1				
NdTemp	11	696	Fixed	0
2.50000000000000E+1				
NdTemp	11	697	Fixed	0
2.50000000000000E+1				
NdTemp	11	698	Fixed	0
2.50000000000000E+1				
NdTemp	11	699	Fixed	0
2.50000000000000E+1				
NdTemp	11	700	Fixed	0
2.50000000000000E+1				
NdTemp	11	701	Fixed	0
2.50000000000000E+1				
NdTemp	11	702	Fixed	0
2.50000000000000E+1				
NdTemp	11	703	Fixed	0
2.50000000000000E+1				
NdTemp	11	704	Fixed	0
2.50000000000000E+1				
NdTemp	11	705	Fixed	0
2.50000000000000E+1				
NdTemp	11	706	Fixed	0
2.50000000000000E+1				
NdTemp	11	707	Fixed	0
2.50000000000000E+1				
NdTemp	11	708	Fixed	0
2.50000000000000E+1				
NdTemp	11	709	Fixed	0
2.50000000000000E+1				
NdTemp	11	710	Fixed	0
2.50000000000000E+1				
NdTemp	11	711	Fixed	0
2.50000000000000E+1				
NdTemp	11	712	Fixed	0
2.50000000000000E+1				
NdTemp	11	713	Fixed	0
2.50000000000000E+1				
NdTemp	11	714	Fixed	0
2.50000000000000E+1				
NdTemp	11	715	Fixed	0
2.50000000000000E+1				
NdTemp	11	716	Fixed	0

2.50000000000000E+1
NdTemp 11 717 Fixed 0
2.50000000000000E+1
NdTemp 11 718 Fixed 0
2.50000000000000E+1
NdTemp 11 719 Fixed 0
2.50000000000000E+1
NdTemp 11 720 Fixed 0
2.50000000000000E+1
NdTemp 11 721 Fixed 0
2.50000000000000E+1
NdTemp 11 722 Fixed 0
2.50000000000000E+1
NdTemp 11 723 Fixed 0
2.50000000000000E+1
NdTemp 11 724 Fixed 0
2.50000000000000E+1
NdTemp 11 725 Fixed 0
2.50000000000000E+1
NdTemp 11 726 Fixed 0
2.50000000000000E+1
NdTemp 11 727 Fixed 0
2.50000000000000E+1
NdTemp 11 728 Fixed 0
2.50000000000000E+1
NdTemp 11 729 Fixed 0
2.50000000000000E+1
NdTemp 11 730 Fixed 0
2.50000000000000E+1
NdTemp 11 731 Fixed 0
2.50000000000000E+1
NdTemp 11 732 Fixed 0
2.50000000000000E+1
NdTemp 11 733 Fixed 0
2.50000000000000E+1
NdTemp 11 734 Fixed 0
2.50000000000000E+1
NdTemp 11 735 Fixed 0
2.50000000000000E+1
NdTemp 11 736 Fixed 0
2.50000000000000E+1
NdTemp 11 737 Fixed 0
2.50000000000000E+1
NdTemp 11 738 Fixed 0
2.50000000000000E+1
NdTemp 11 739 Fixed 0
2.50000000000000E+1
NdTemp 11 740 Fixed 0
2.50000000000000E+1
NdTemp 11 741 Fixed 0
2.50000000000000E+1
NdTemp 11 742 Fixed 0
2.50000000000000E+1
NdTemp 11 743 Fixed 0

2.50000000000000E+1
NdTemp 11 744 Fixed 0
2.50000000000000E+1
NdTemp 11 745 Fixed 0
2.50000000000000E+1
NdTemp 11 746 Fixed 0
2.50000000000000E+1
NdTemp 11 747 Fixed 0
2.50000000000000E+1
NdTemp 11 748 Fixed 0
2.50000000000000E+1
NdTemp 11 749 Fixed 0
2.50000000000000E+1
NdTemp 11 750 Fixed 0
2.50000000000000E+1
NdTemp 11 751 Fixed 0
2.50000000000000E+1
NdTemp 11 752 Fixed 0
2.50000000000000E+1
NdTemp 11 753 Fixed 0
2.50000000000000E+1
NdTemp 11 754 Fixed 0
2.50000000000000E+1
NdTemp 11 755 Fixed 0
2.50000000000000E+1
NdTemp 11 756 Fixed 0
2.50000000000000E+1
NdTemp 11 757 Fixed 0
2.50000000000000E+1
NdTemp 11 758 Fixed 0
2.50000000000000E+1
NdTemp 11 759 Fixed 0
2.50000000000000E+1
NdTemp 11 760 Fixed 0
2.50000000000000E+1
NdTemp 11 761 Fixed 0
2.50000000000000E+1
NdTemp 11 762 Fixed 0
2.50000000000000E+1
NdTemp 11 763 Fixed 0
2.50000000000000E+1
NdTemp 11 764 Fixed 0
2.50000000000000E+1
NdTemp 11 765 Fixed 0
2.50000000000000E+1
NdTemp 11 766 Fixed 0
2.50000000000000E+1
NdTemp 11 767 Fixed 0
2.50000000000000E+1
NdTemp 11 768 Fixed 0
2.50000000000000E+1
NdTemp 11 769 Fixed 0
2.50000000000000E+1
NdTemp 11 770 Fixed 0

2.50000000000000E+1
NdTemp 11 771 Fixed 0
2.50000000000000E+1
NdTemp 11 772 Fixed 0
2.50000000000000E+1
NdTemp 11 773 Fixed 0
2.50000000000000E+1
NdTemp 11 774 Fixed 0
2.50000000000000E+1
NdTemp 11 775 Fixed 0
2.50000000000000E+1
NdTemp 11 776 Fixed 0
2.50000000000000E+1
NdTemp 11 777 Fixed 0
2.50000000000000E+1
NdTemp 11 778 Fixed 0
2.50000000000000E+1
NdTemp 11 779 Fixed 0
2.50000000000000E+1
NdTemp 11 780 Fixed 0
2.50000000000000E+1
NdTemp 11 781 Fixed 0
2.50000000000000E+1
NdTemp 11 782 Fixed 0
2.50000000000000E+1
NdTemp 11 783 Fixed 0
2.50000000000000E+1
NdTemp 11 784 Fixed 0
2.50000000000000E+1
NdTemp 11 785 Fixed 0
2.50000000000000E+1
NdTemp 11 786 Fixed 0
2.50000000000000E+1
NdTemp 11 787 Fixed 0
2.50000000000000E+1
NdTemp 11 788 Fixed 0
2.50000000000000E+1
NdTemp 11 789 Fixed 0
2.50000000000000E+1
NdTemp 11 790 Fixed 0
2.50000000000000E+1
NdTemp 11 791 Fixed 0
2.50000000000000E+1
NdTemp 11 792 Fixed 0
2.50000000000000E+1
NdTemp 11 793 Fixed 0
2.50000000000000E+1
NdTemp 11 794 Fixed 0
2.50000000000000E+1
NdTemp 11 795 Fixed 0
2.50000000000000E+1
NdTemp 11 796 Fixed 0
2.50000000000000E+1
NdTemp 11 797 Fixed 0

```
2.50000000000000E+1
   NdTemp                  11     798      Fixed        0
2.50000000000000E+1
   NdTemp                  11     799      Fixed        0
2.50000000000000E+1
   NdTemp                  11     800      Fixed        0
2.50000000000000E+1
   NdTemp                  11     801      Fixed        0
2.50000000000000E+1
   NdTemp                  11     802      Fixed        0
2.50000000000000E+1
   NdTemp                  11     803      Fixed        0
2.50000000000000E+1
   NdTemp                  11     804      Fixed        0
2.50000000000000E+1
   NdTemp                  11     805      Fixed        0
2.50000000000000E+1
   NdTemp                  11     806      Fixed        0
2.50000000000000E+1
   NdTemp                  11     807      Fixed        0
2.50000000000000E+1
   NdTemp                  11     808      Fixed        0
2.50000000000000E+1
   NdTemp                  11     809      Fixed        0
2.50000000000000E+1
   NdTemp                  11     810      Fixed        0
2.50000000000000E+1
   NdTemp                  11     811      Fixed        0
2.50000000000000E+1
   NdTemp                  11     812      Fixed        0
2.50000000000000E+1
   NdTemp                  11     813      Fixed        0
2.50000000000000E+1
   NdTemp                  11     814      Fixed        0
2.50000000000000E+1
   NdTemp                  11     815      Fixed        0
2.50000000000000E+1
   NdTemp                  11     816      Fixed        0
2.50000000000000E+1
   NdTemp                  11     817      Fixed        0
2.50000000000000E+1
   NdTemp                  11     818      Fixed        0
2.50000000000000E+1

/ ____________________________________________________________________________
/ NODE TEMPERATURES
/ T01 - DTu = -25°C
   NdTemp                  12       1      Fixed        0
-2.50000000000000E+1
   NdTemp                  12       2      Fixed        0
-2.50000000000000E+1
   NdTemp                  12       3      Fixed        0
-2.50000000000000E+1
   NdTemp                  12       4      Fixed        0
```

```
-2.50000000000000E+1
   NdTemp                  12        5      Fixed        0
-2.50000000000000E+1
   NdTemp                  12        6      Fixed        0
-2.50000000000000E+1
   NdTemp                  12        7      Fixed        0
-2.50000000000000E+1
   NdTemp                  12        8      Fixed        0
-2.50000000000000E+1
   NdTemp                  12        9      Fixed        0
-2.50000000000000E+1
   NdTemp                  12       10      Fixed        0
-2.50000000000000E+1
   NdTemp                  12       11      Fixed        0
-2.50000000000000E+1
   NdTemp                  12       12      Fixed        0
-2.50000000000000E+1
   NdTemp                  12       13      Fixed        0
-2.50000000000000E+1
   NdTemp                  12       14      Fixed        0
-2.50000000000000E+1
   NdTemp                  12       15      Fixed        0
-2.50000000000000E+1
   NdTemp                  12       16      Fixed        0
-2.50000000000000E+1
   NdTemp                  12       17      Fixed        0
-2.50000000000000E+1
   NdTemp                  12       18      Fixed        0
-2.50000000000000E+1
   NdTemp                  12       19      Fixed        0
-2.50000000000000E+1
   NdTemp                  12       20      Fixed        0
-2.50000000000000E+1
   NdTemp                  12       21      Fixed        0
-2.50000000000000E+1
   NdTemp                  12       22      Fixed        0
-2.50000000000000E+1
   NdTemp                  12       23      Fixed        0
-2.50000000000000E+1
   NdTemp                  12       24      Fixed        0
-2.50000000000000E+1
   NdTemp                  12       25      Fixed        0
-2.50000000000000E+1
   NdTemp                  12       26      Fixed        0
-2.50000000000000E+1
   NdTemp                  12       27      Fixed        0
-2.50000000000000E+1
   NdTemp                  12       28      Fixed        0
-2.50000000000000E+1
   NdTemp                  12       29      Fixed        0
-2.50000000000000E+1
   NdTemp                  12       30      Fixed        0
-2.50000000000000E+1
   NdTemp                  12       31      Fixed        0
```

```
-2.50000000000000E+1
   NdTemp                  12      32      Fixed        0
-2.50000000000000E+1
   NdTemp                  12      33      Fixed        0
-2.50000000000000E+1
   NdTemp                  12      34      Fixed        0
-2.50000000000000E+1
   NdTemp                  12      35      Fixed        0
-2.50000000000000E+1
   NdTemp                  12      36      Fixed        0
-2.50000000000000E+1
   NdTemp                  12      37      Fixed        0
-2.50000000000000E+1
   NdTemp                  12      38      Fixed        0
-2.50000000000000E+1
   NdTemp                  12      39      Fixed        0
-2.50000000000000E+1
   NdTemp                  12      40      Fixed        0
-2.50000000000000E+1
   NdTemp                  12      41      Fixed        0
-2.50000000000000E+1
   NdTemp                  12      42      Fixed        0
-2.50000000000000E+1
   NdTemp                  12      43      Fixed        0
-2.50000000000000E+1
   NdTemp                  12      44      Fixed        0
-2.50000000000000E+1
   NdTemp                  12      45      Fixed        0
-2.50000000000000E+1
   NdTemp                  12      46      Fixed        0
-2.50000000000000E+1
   NdTemp                  12      47      Fixed        0
-2.50000000000000E+1
   NdTemp                  12      48      Fixed        0
-2.50000000000000E+1
   NdTemp                  12      49      Fixed        0
-2.50000000000000E+1
   NdTemp                  12      50      Fixed        0
-2.50000000000000E+1
   NdTemp                  12      51      Fixed        0
-2.50000000000000E+1
   NdTemp                  12      52      Fixed        0
-2.50000000000000E+1
   NdTemp                  12      53      Fixed        0
-2.50000000000000E+1
   NdTemp                  12      54      Fixed        0
-2.50000000000000E+1
   NdTemp                  12      55      Fixed        0
-2.50000000000000E+1
   NdTemp                  12      56      Fixed        0
-2.50000000000000E+1
   NdTemp                  12      57      Fixed        0
-2.50000000000000E+1
   NdTemp                  12      58      Fixed        0
```

-2.50000000000000E+1
NdTemp 12 59 Fixed 0
-2.50000000000000E+1
NdTemp 12 60 Fixed 0
-2.50000000000000E+1
NdTemp 12 61 Fixed 0
-2.50000000000000E+1
NdTemp 12 62 Fixed 0
-2.50000000000000E+1
NdTemp 12 63 Fixed 0
-2.50000000000000E+1
NdTemp 12 64 Fixed 0
-2.50000000000000E+1
NdTemp 12 65 Fixed 0
-2.50000000000000E+1
NdTemp 12 66 Fixed 0
-2.50000000000000E+1
NdTemp 12 67 Fixed 0
-2.50000000000000E+1
NdTemp 12 68 Fixed 0
-2.50000000000000E+1
NdTemp 12 69 Fixed 0
-2.50000000000000E+1
NdTemp 12 70 Fixed 0
-2.50000000000000E+1
NdTemp 12 71 Fixed 0
-2.50000000000000E+1
NdTemp 12 72 Fixed 0
-2.50000000000000E+1
NdTemp 12 73 Fixed 0
-2.50000000000000E+1
NdTemp 12 74 Fixed 0
-2.50000000000000E+1
NdTemp 12 75 Fixed 0
-2.50000000000000E+1
NdTemp 12 76 Fixed 0
-2.50000000000000E+1
NdTemp 12 77 Fixed 0
-2.50000000000000E+1
NdTemp 12 78 Fixed 0
-2.50000000000000E+1
NdTemp 12 79 Fixed 0
-2.50000000000000E+1
NdTemp 12 80 Fixed 0
-2.50000000000000E+1
NdTemp 12 81 Fixed 0
-2.50000000000000E+1
NdTemp 12 82 Fixed 0
-2.50000000000000E+1
NdTemp 12 83 Fixed 0
-2.50000000000000E+1
NdTemp 12 84 Fixed 0
-2.50000000000000E+1
NdTemp 12 85 Fixed 0

-2.50000000000000E+1
NdTemp 12 86 Fixed 0
-2.50000000000000E+1
NdTemp 12 87 Fixed 0
-2.50000000000000E+1
NdTemp 12 88 Fixed 0
-2.50000000000000E+1
NdTemp 12 89 Fixed 0
-2.50000000000000E+1
NdTemp 12 90 Fixed 0
-2.50000000000000E+1
NdTemp 12 91 Fixed 0
-2.50000000000000E+1
NdTemp 12 92 Fixed 0
-2.50000000000000E+1
NdTemp 12 93 Fixed 0
-2.50000000000000E+1
NdTemp 12 94 Fixed 0
-2.50000000000000E+1
NdTemp 12 95 Fixed 0
-2.50000000000000E+1
NdTemp 12 96 Fixed 0
-2.50000000000000E+1
NdTemp 12 97 Fixed 0
-2.50000000000000E+1
NdTemp 12 98 Fixed 0
-2.50000000000000E+1
NdTemp 12 99 Fixed 0
-2.50000000000000E+1
NdTemp 12 100 Fixed 0
-2.50000000000000E+1
NdTemp 12 101 Fixed 0
-2.50000000000000E+1
NdTemp 12 102 Fixed 0
-2.50000000000000E+1
NdTemp 12 103 Fixed 0
-2.50000000000000E+1
NdTemp 12 104 Fixed 0
-2.50000000000000E+1
NdTemp 12 105 Fixed 0
-2.50000000000000E+1
NdTemp 12 106 Fixed 0
-2.50000000000000E+1
NdTemp 12 107 Fixed 0
-2.50000000000000E+1
NdTemp 12 108 Fixed 0
-2.50000000000000E+1
NdTemp 12 109 Fixed 0
-2.50000000000000E+1
NdTemp 12 110 Fixed 0
-2.50000000000000E+1
NdTemp 12 111 Fixed 0
-2.50000000000000E+1
NdTemp 12 112 Fixed 0

-2.50000000000000E+1
NdTemp 12 113 Fixed 0
-2.50000000000000E+1
NdTemp 12 114 Fixed 0
-2.50000000000000E+1
NdTemp 12 115 Fixed 0
-2.50000000000000E+1
NdTemp 12 116 Fixed 0
-2.50000000000000E+1
NdTemp 12 117 Fixed 0
-2.50000000000000E+1
NdTemp 12 118 Fixed 0
-2.50000000000000E+1
NdTemp 12 119 Fixed 0
-2.50000000000000E+1
NdTemp 12 120 Fixed 0
-2.50000000000000E+1
NdTemp 12 121 Fixed 0
-2.50000000000000E+1
NdTemp 12 122 Fixed 0
-2.50000000000000E+1
NdTemp 12 123 Fixed 0
-2.50000000000000E+1
NdTemp 12 124 Fixed 0
-2.50000000000000E+1
NdTemp 12 125 Fixed 0
-2.50000000000000E+1
NdTemp 12 126 Fixed 0
-2.50000000000000E+1
NdTemp 12 127 Fixed 0
-2.50000000000000E+1
NdTemp 12 128 Fixed 0
-2.50000000000000E+1
NdTemp 12 129 Fixed 0
-2.50000000000000E+1
NdTemp 12 130 Fixed 0
-2.50000000000000E+1
NdTemp 12 131 Fixed 0
-2.50000000000000E+1
NdTemp 12 132 Fixed 0
-2.50000000000000E+1
NdTemp 12 133 Fixed 0
-2.50000000000000E+1
NdTemp 12 134 Fixed 0
-2.50000000000000E+1
NdTemp 12 135 Fixed 0
-2.50000000000000E+1
NdTemp 12 136 Fixed 0
-2.50000000000000E+1
NdTemp 12 137 Fixed 0
-2.50000000000000E+1
NdTemp 12 138 Fixed 0
-2.50000000000000E+1
NdTemp 12 139 Fixed 0

-2.50000000000000E+1
NdTemp 12 140 Fixed 0
-2.50000000000000E+1
NdTemp 12 141 Fixed 0
-2.50000000000000E+1
NdTemp 12 142 Fixed 0
-2.50000000000000E+1
NdTemp 12 143 Fixed 0
-2.50000000000000E+1
NdTemp 12 144 Fixed 0
-2.50000000000000E+1
NdTemp 12 145 Fixed 0
-2.50000000000000E+1
NdTemp 12 146 Fixed 0
-2.50000000000000E+1
NdTemp 12 147 Fixed 0
-2.50000000000000E+1
NdTemp 12 148 Fixed 0
-2.50000000000000E+1
NdTemp 12 149 Fixed 0
-2.50000000000000E+1
NdTemp 12 150 Fixed 0
-2.50000000000000E+1
NdTemp 12 151 Fixed 0
-2.50000000000000E+1
NdTemp 12 152 Fixed 0
-2.50000000000000E+1
NdTemp 12 153 Fixed 0
-2.50000000000000E+1
NdTemp 12 154 Fixed 0
-2.50000000000000E+1
NdTemp 12 155 Fixed 0
-2.50000000000000E+1
NdTemp 12 156 Fixed 0
-2.50000000000000E+1
NdTemp 12 157 Fixed 0
-2.50000000000000E+1
NdTemp 12 158 Fixed 0
-2.50000000000000E+1
NdTemp 12 159 Fixed 0
-2.50000000000000E+1
NdTemp 12 160 Fixed 0
-2.50000000000000E+1
NdTemp 12 161 Fixed 0
-2.50000000000000E+1
NdTemp 12 162 Fixed 0
-2.50000000000000E+1
NdTemp 12 163 Fixed 0
-2.50000000000000E+1
NdTemp 12 164 Fixed 0
-2.50000000000000E+1
NdTemp 12 165 Fixed 0
-2.50000000000000E+1
NdTemp 12 166 Fixed 0

-2.50000000000000E+1
NdTemp 12 167 Fixed 0
-2.50000000000000E+1
NdTemp 12 168 Fixed 0
-2.50000000000000E+1
NdTemp 12 169 Fixed 0
-2.50000000000000E+1
NdTemp 12 170 Fixed 0
-2.50000000000000E+1
NdTemp 12 171 Fixed 0
-2.50000000000000E+1
NdTemp 12 172 Fixed 0
-2.50000000000000E+1
NdTemp 12 173 Fixed 0
-2.50000000000000E+1
NdTemp 12 174 Fixed 0
-2.50000000000000E+1
NdTemp 12 175 Fixed 0
-2.50000000000000E+1
NdTemp 12 176 Fixed 0
-2.50000000000000E+1
NdTemp 12 177 Fixed 0
-2.50000000000000E+1
NdTemp 12 178 Fixed 0
-2.50000000000000E+1
NdTemp 12 179 Fixed 0
-2.50000000000000E+1
NdTemp 12 180 Fixed 0
-2.50000000000000E+1
NdTemp 12 181 Fixed 0
-2.50000000000000E+1
NdTemp 12 182 Fixed 0
-2.50000000000000E+1
NdTemp 12 183 Fixed 0
-2.50000000000000E+1
NdTemp 12 184 Fixed 0
-2.50000000000000E+1
NdTemp 12 185 Fixed 0
-2.50000000000000E+1
NdTemp 12 186 Fixed 0
-2.50000000000000E+1
NdTemp 12 187 Fixed 0
-2.50000000000000E+1
NdTemp 12 188 Fixed 0
-2.50000000000000E+1
NdTemp 12 189 Fixed 0
-2.50000000000000E+1
NdTemp 12 190 Fixed 0
-2.50000000000000E+1
NdTemp 12 191 Fixed 0
-2.50000000000000E+1
NdTemp 12 192 Fixed 0
-2.50000000000000E+1
NdTemp 12 193 Fixed 0

-2.50000000000000E+1
NdTemp 12 194 Fixed 0
-2.50000000000000E+1
NdTemp 12 195 Fixed 0
-2.50000000000000E+1
NdTemp 12 196 Fixed 0
-2.50000000000000E+1
NdTemp 12 197 Fixed 0
-2.50000000000000E+1
NdTemp 12 198 Fixed 0
-2.50000000000000E+1
NdTemp 12 199 Fixed 0
-2.50000000000000E+1
NdTemp 12 200 Fixed 0
-2.50000000000000E+1
NdTemp 12 201 Fixed 0
-2.50000000000000E+1
NdTemp 12 202 Fixed 0
-2.50000000000000E+1
NdTemp 12 203 Fixed 0
-2.50000000000000E+1
NdTemp 12 204 Fixed 0
-2.50000000000000E+1
NdTemp 12 205 Fixed 0
-2.50000000000000E+1
NdTemp 12 206 Fixed 0
-2.50000000000000E+1
NdTemp 12 207 Fixed 0
-2.50000000000000E+1
NdTemp 12 208 Fixed 0
-2.50000000000000E+1
NdTemp 12 209 Fixed 0
-2.50000000000000E+1
NdTemp 12 210 Fixed 0
-2.50000000000000E+1
NdTemp 12 211 Fixed 0
-2.50000000000000E+1
NdTemp 12 212 Fixed 0
-2.50000000000000E+1
NdTemp 12 213 Fixed 0
-2.50000000000000E+1
NdTemp 12 214 Fixed 0
-2.50000000000000E+1
NdTemp 12 215 Fixed 0
-2.50000000000000E+1
NdTemp 12 216 Fixed 0
-2.50000000000000E+1
NdTemp 12 217 Fixed 0
-2.50000000000000E+1
NdTemp 12 218 Fixed 0
-2.50000000000000E+1
NdTemp 12 219 Fixed 0
-2.50000000000000E+1
NdTemp 12 220 Fixed 0

-2.50000000000000E+1
NdTemp 12 221 Fixed 0
-2.50000000000000E+1
NdTemp 12 222 Fixed 0
-2.50000000000000E+1
NdTemp 12 223 Fixed 0
-2.50000000000000E+1
NdTemp 12 224 Fixed 0
-2.50000000000000E+1
NdTemp 12 225 Fixed 0
-2.50000000000000E+1
NdTemp 12 226 Fixed 0
-2.50000000000000E+1
NdTemp 12 227 Fixed 0
-2.50000000000000E+1
NdTemp 12 228 Fixed 0
-2.50000000000000E+1
NdTemp 12 229 Fixed 0
-2.50000000000000E+1
NdTemp 12 230 Fixed 0
-2.50000000000000E+1
NdTemp 12 231 Fixed 0
-2.50000000000000E+1
NdTemp 12 232 Fixed 0
-2.50000000000000E+1
NdTemp 12 233 Fixed 0
-2.50000000000000E+1
NdTemp 12 234 Fixed 0
-2.50000000000000E+1
NdTemp 12 235 Fixed 0
-2.50000000000000E+1
NdTemp 12 236 Fixed 0
-2.50000000000000E+1
NdTemp 12 237 Fixed 0
-2.50000000000000E+1
NdTemp 12 238 Fixed 0
-2.50000000000000E+1
NdTemp 12 239 Fixed 0
-2.50000000000000E+1
NdTemp 12 240 Fixed 0
-2.50000000000000E+1
NdTemp 12 241 Fixed 0
-2.50000000000000E+1
NdTemp 12 242 Fixed 0
-2.50000000000000E+1
NdTemp 12 243 Fixed 0
-2.50000000000000E+1
NdTemp 12 244 Fixed 0
-2.50000000000000E+1
NdTemp 12 245 Fixed 0
-2.50000000000000E+1
NdTemp 12 246 Fixed 0
-2.50000000000000E+1
NdTemp 12 247 Fixed 0

-2.50000000000000E+1
NdTemp 12 248 Fixed 0
-2.50000000000000E+1
NdTemp 12 249 Fixed 0
-2.50000000000000E+1
NdTemp 12 250 Fixed 0
-2.50000000000000E+1
NdTemp 12 251 Fixed 0
-2.50000000000000E+1
NdTemp 12 252 Fixed 0
-2.50000000000000E+1
NdTemp 12 253 Fixed 0
-2.50000000000000E+1
NdTemp 12 254 Fixed 0
-2.50000000000000E+1
NdTemp 12 255 Fixed 0
-2.50000000000000E+1
NdTemp 12 256 Fixed 0
-2.50000000000000E+1
NdTemp 12 257 Fixed 0
-2.50000000000000E+1
NdTemp 12 258 Fixed 0
-2.50000000000000E+1
NdTemp 12 259 Fixed 0
-2.50000000000000E+1
NdTemp 12 260 Fixed 0
-2.50000000000000E+1
NdTemp 12 261 Fixed 0
-2.50000000000000E+1
NdTemp 12 262 Fixed 0
-2.50000000000000E+1
NdTemp 12 263 Fixed 0
-2.50000000000000E+1
NdTemp 12 264 Fixed 0
-2.50000000000000E+1
NdTemp 12 265 Fixed 0
-2.50000000000000E+1
NdTemp 12 266 Fixed 0
-2.50000000000000E+1
NdTemp 12 267 Fixed 0
-2.50000000000000E+1
NdTemp 12 268 Fixed 0
-2.50000000000000E+1
NdTemp 12 269 Fixed 0
-2.50000000000000E+1
NdTemp 12 270 Fixed 0
-2.50000000000000E+1
NdTemp 12 271 Fixed 0
-2.50000000000000E+1
NdTemp 12 272 Fixed 0
-2.50000000000000E+1
NdTemp 12 273 Fixed 0
-2.50000000000000E+1
NdTemp 12 274 Fixed 0

-2.50000000000000E+1
NdTemp 12 275 Fixed 0
-2.50000000000000E+1
NdTemp 12 276 Fixed 0
-2.50000000000000E+1
NdTemp 12 277 Fixed 0
-2.50000000000000E+1
NdTemp 12 278 Fixed 0
-2.50000000000000E+1
NdTemp 12 279 Fixed 0
-2.50000000000000E+1
NdTemp 12 280 Fixed 0
-2.50000000000000E+1
NdTemp 12 281 Fixed 0
-2.50000000000000E+1
NdTemp 12 282 Fixed 0
-2.50000000000000E+1
NdTemp 12 283 Fixed 0
-2.50000000000000E+1
NdTemp 12 284 Fixed 0
-2.50000000000000E+1
NdTemp 12 285 Fixed 0
-2.50000000000000E+1
NdTemp 12 286 Fixed 0
-2.50000000000000E+1
NdTemp 12 287 Fixed 0
-2.50000000000000E+1
NdTemp 12 288 Fixed 0
-2.50000000000000E+1
NdTemp 12 289 Fixed 0
-2.50000000000000E+1
NdTemp 12 290 Fixed 0
-2.50000000000000E+1
NdTemp 12 291 Fixed 0
-2.50000000000000E+1
NdTemp 12 292 Fixed 0
-2.50000000000000E+1
NdTemp 12 293 Fixed 0
-2.50000000000000E+1
NdTemp 12 294 Fixed 0
-2.50000000000000E+1
NdTemp 12 295 Fixed 0
-2.50000000000000E+1
NdTemp 12 296 Fixed 0
-2.50000000000000E+1
NdTemp 12 297 Fixed 0
-2.50000000000000E+1
NdTemp 12 298 Fixed 0
-2.50000000000000E+1
NdTemp 12 299 Fixed 0
-2.50000000000000E+1
NdTemp 12 300 Fixed 0
-2.50000000000000E+1
NdTemp 12 301 Fixed 0

-2.50000000000000E+1
NdTemp 12 302 Fixed 0
-2.50000000000000E+1
NdTemp 12 303 Fixed 0
-2.50000000000000E+1
NdTemp 12 304 Fixed 0
-2.50000000000000E+1
NdTemp 12 305 Fixed 0
-2.50000000000000E+1
NdTemp 12 306 Fixed 0
-2.50000000000000E+1
NdTemp 12 307 Fixed 0
-2.50000000000000E+1
NdTemp 12 308 Fixed 0
-2.50000000000000E+1
NdTemp 12 309 Fixed 0
-2.50000000000000E+1
NdTemp 12 310 Fixed 0
-2.50000000000000E+1
NdTemp 12 311 Fixed 0
-2.50000000000000E+1
NdTemp 12 312 Fixed 0
-2.50000000000000E+1
NdTemp 12 313 Fixed 0
-2.50000000000000E+1
NdTemp 12 314 Fixed 0
-2.50000000000000E+1
NdTemp 12 315 Fixed 0
-2.50000000000000E+1
NdTemp 12 316 Fixed 0
-2.50000000000000E+1
NdTemp 12 317 Fixed 0
-2.50000000000000E+1
NdTemp 12 318 Fixed 0
-2.50000000000000E+1
NdTemp 12 319 Fixed 0
-2.50000000000000E+1
NdTemp 12 320 Fixed 0
-2.50000000000000E+1
NdTemp 12 321 Fixed 0
-2.50000000000000E+1
NdTemp 12 322 Fixed 0
-2.50000000000000E+1
NdTemp 12 323 Fixed 0
-2.50000000000000E+1
NdTemp 12 324 Fixed 0
-2.50000000000000E+1
NdTemp 12 325 Fixed 0
-2.50000000000000E+1
NdTemp 12 326 Fixed 0
-2.50000000000000E+1
NdTemp 12 327 Fixed 0
-2.50000000000000E+1
NdTemp 12 328 Fixed 0

-2.50000000000000E+1
NdTemp 12 329 Fixed 0
-2.50000000000000E+1
NdTemp 12 330 Fixed 0
-2.50000000000000E+1
NdTemp 12 331 Fixed 0
-2.50000000000000E+1
NdTemp 12 332 Fixed 0
-2.50000000000000E+1
NdTemp 12 333 Fixed 0
-2.50000000000000E+1
NdTemp 12 334 Fixed 0
-2.50000000000000E+1
NdTemp 12 335 Fixed 0
-2.50000000000000E+1
NdTemp 12 336 Fixed 0
-2.50000000000000E+1
NdTemp 12 337 Fixed 0
-2.50000000000000E+1
NdTemp 12 338 Fixed 0
-2.50000000000000E+1
NdTemp 12 339 Fixed 0
-2.50000000000000E+1
NdTemp 12 340 Fixed 0
-2.50000000000000E+1
NdTemp 12 341 Fixed 0
-2.50000000000000E+1
NdTemp 12 342 Fixed 0
-2.50000000000000E+1
NdTemp 12 343 Fixed 0
-2.50000000000000E+1
NdTemp 12 344 Fixed 0
-2.50000000000000E+1
NdTemp 12 345 Fixed 0
-2.50000000000000E+1
NdTemp 12 346 Fixed 0
-2.50000000000000E+1
NdTemp 12 347 Fixed 0
-2.50000000000000E+1
NdTemp 12 348 Fixed 0
-2.50000000000000E+1
NdTemp 12 349 Fixed 0
-2.50000000000000E+1
NdTemp 12 350 Fixed 0
-2.50000000000000E+1
NdTemp 12 351 Fixed 0
-2.50000000000000E+1
NdTemp 12 352 Fixed 0
-2.50000000000000E+1
NdTemp 12 353 Fixed 0
-2.50000000000000E+1
NdTemp 12 354 Fixed 0
-2.50000000000000E+1
NdTemp 12 355 Fixed 0

-2.50000000000000E+1
NdTemp 12 356 Fixed 0
-2.50000000000000E+1
NdTemp 12 357 Fixed 0
-2.50000000000000E+1
NdTemp 12 358 Fixed 0
-2.50000000000000E+1
NdTemp 12 359 Fixed 0
-2.50000000000000E+1
NdTemp 12 360 Fixed 0
-2.50000000000000E+1
NdTemp 12 361 Fixed 0
-2.50000000000000E+1
NdTemp 12 362 Fixed 0
-2.50000000000000E+1
NdTemp 12 363 Fixed 0
-2.50000000000000E+1
NdTemp 12 364 Fixed 0
-2.50000000000000E+1
NdTemp 12 365 Fixed 0
-2.50000000000000E+1
NdTemp 12 366 Fixed 0
-2.50000000000000E+1
NdTemp 12 367 Fixed 0
-2.50000000000000E+1
NdTemp 12 368 Fixed 0
-2.50000000000000E+1
NdTemp 12 369 Fixed 0
-2.50000000000000E+1
NdTemp 12 370 Fixed 0
-2.50000000000000E+1
NdTemp 12 371 Fixed 0
-2.50000000000000E+1
NdTemp 12 372 Fixed 0
-2.50000000000000E+1
NdTemp 12 373 Fixed 0
-2.50000000000000E+1
NdTemp 12 374 Fixed 0
-2.50000000000000E+1
NdTemp 12 375 Fixed 0
-2.50000000000000E+1
NdTemp 12 376 Fixed 0
-2.50000000000000E+1
NdTemp 12 377 Fixed 0
-2.50000000000000E+1
NdTemp 12 378 Fixed 0
-2.50000000000000E+1
NdTemp 12 379 Fixed 0
-2.50000000000000E+1
NdTemp 12 380 Fixed 0
-2.50000000000000E+1
NdTemp 12 381 Fixed 0
-2.50000000000000E+1
NdTemp 12 382 Fixed 0

-2.50000000000000E+1
NdTemp 12 383 Fixed 0
-2.50000000000000E+1
NdTemp 12 384 Fixed 0
-2.50000000000000E+1
NdTemp 12 385 Fixed 0
-2.50000000000000E+1
NdTemp 12 386 Fixed 0
-2.50000000000000E+1
NdTemp 12 387 Fixed 0
-2.50000000000000E+1
NdTemp 12 388 Fixed 0
-2.50000000000000E+1
NdTemp 12 389 Fixed 0
-2.50000000000000E+1
NdTemp 12 390 Fixed 0
-2.50000000000000E+1
NdTemp 12 391 Fixed 0
-2.50000000000000E+1
NdTemp 12 392 Fixed 0
-2.50000000000000E+1
NdTemp 12 393 Fixed 0
-2.50000000000000E+1
NdTemp 12 394 Fixed 0
-2.50000000000000E+1
NdTemp 12 395 Fixed 0
-2.50000000000000E+1
NdTemp 12 396 Fixed 0
-2.50000000000000E+1
NdTemp 12 397 Fixed 0
-2.50000000000000E+1
NdTemp 12 398 Fixed 0
-2.50000000000000E+1
NdTemp 12 399 Fixed 0
-2.50000000000000E+1
NdTemp 12 400 Fixed 0
-2.50000000000000E+1
NdTemp 12 401 Fixed 0
-2.50000000000000E+1
NdTemp 12 402 Fixed 0
-2.50000000000000E+1
NdTemp 12 403 Fixed 0
-2.50000000000000E+1
NdTemp 12 404 Fixed 0
-2.50000000000000E+1
NdTemp 12 405 Fixed 0
-2.50000000000000E+1
NdTemp 12 406 Fixed 0
-2.50000000000000E+1
NdTemp 12 407 Fixed 0
-2.50000000000000E+1
NdTemp 12 408 Fixed 0
-2.50000000000000E+1
NdTemp 12 409 Fixed 0

-2.50000000000000E+1
NdTemp 12 410 Fixed 0
-2.50000000000000E+1
NdTemp 12 411 Fixed 0
-2.50000000000000E+1
NdTemp 12 412 Fixed 0
-2.50000000000000E+1
NdTemp 12 413 Fixed 0
-2.50000000000000E+1
NdTemp 12 414 Fixed 0
-2.50000000000000E+1
NdTemp 12 415 Fixed 0
-2.50000000000000E+1
NdTemp 12 416 Fixed 0
-2.50000000000000E+1
NdTemp 12 417 Fixed 0
-2.50000000000000E+1
NdTemp 12 418 Fixed 0
-2.50000000000000E+1
NdTemp 12 419 Fixed 0
-2.50000000000000E+1
NdTemp 12 420 Fixed 0
-2.50000000000000E+1
NdTemp 12 421 Fixed 0
-2.50000000000000E+1
NdTemp 12 422 Fixed 0
-2.50000000000000E+1
NdTemp 12 423 Fixed 0
-2.50000000000000E+1
NdTemp 12 424 Fixed 0
-2.50000000000000E+1
NdTemp 12 425 Fixed 0
-2.50000000000000E+1
NdTemp 12 426 Fixed 0
-2.50000000000000E+1
NdTemp 12 427 Fixed 0
-2.50000000000000E+1
NdTemp 12 428 Fixed 0
-2.50000000000000E+1
NdTemp 12 429 Fixed 0
-2.50000000000000E+1
NdTemp 12 430 Fixed 0
-2.50000000000000E+1
NdTemp 12 431 Fixed 0
-2.50000000000000E+1
NdTemp 12 432 Fixed 0
-2.50000000000000E+1
NdTemp 12 433 Fixed 0
-2.50000000000000E+1
NdTemp 12 434 Fixed 0
-2.50000000000000E+1
NdTemp 12 435 Fixed 0
-2.50000000000000E+1
NdTemp 12 436 Fixed 0

-2.50000000000000E+1
NdTemp 12 437 Fixed 0
-2.50000000000000E+1
NdTemp 12 438 Fixed 0
-2.50000000000000E+1
NdTemp 12 439 Fixed 0
-2.50000000000000E+1
NdTemp 12 440 Fixed 0
-2.50000000000000E+1
NdTemp 12 441 Fixed 0
-2.50000000000000E+1
NdTemp 12 442 Fixed 0
-2.50000000000000E+1
NdTemp 12 443 Fixed 0
-2.50000000000000E+1
NdTemp 12 444 Fixed 0
-2.50000000000000E+1
NdTemp 12 445 Fixed 0
-2.50000000000000E+1
NdTemp 12 446 Fixed 0
-2.50000000000000E+1
NdTemp 12 447 Fixed 0
-2.50000000000000E+1
NdTemp 12 448 Fixed 0
-2.50000000000000E+1
NdTemp 12 449 Fixed 0
-2.50000000000000E+1
NdTemp 12 450 Fixed 0
-2.50000000000000E+1
NdTemp 12 451 Fixed 0
-2.50000000000000E+1
NdTemp 12 452 Fixed 0
-2.50000000000000E+1
NdTemp 12 453 Fixed 0
-2.50000000000000E+1
NdTemp 12 454 Fixed 0
-2.50000000000000E+1
NdTemp 12 455 Fixed 0
-2.50000000000000E+1
NdTemp 12 456 Fixed 0
-2.50000000000000E+1
NdTemp 12 457 Fixed 0
-2.50000000000000E+1
NdTemp 12 458 Fixed 0
-2.50000000000000E+1
NdTemp 12 459 Fixed 0
-2.50000000000000E+1
NdTemp 12 460 Fixed 0
-2.50000000000000E+1
NdTemp 12 461 Fixed 0
-2.50000000000000E+1
NdTemp 12 462 Fixed 0
-2.50000000000000E+1
NdTemp 12 463 Fixed 0

-2.50000000000000E+1
NdTemp 12 464 Fixed 0
-2.50000000000000E+1
NdTemp 12 465 Fixed 0
-2.50000000000000E+1
NdTemp 12 466 Fixed 0
-2.50000000000000E+1
NdTemp 12 467 Fixed 0
-2.50000000000000E+1
NdTemp 12 468 Fixed 0
-2.50000000000000E+1
NdTemp 12 469 Fixed 0
-2.50000000000000E+1
NdTemp 12 470 Fixed 0
-2.50000000000000E+1
NdTemp 12 471 Fixed 0
-2.50000000000000E+1
NdTemp 12 472 Fixed 0
-2.50000000000000E+1
NdTemp 12 473 Fixed 0
-2.50000000000000E+1
NdTemp 12 474 Fixed 0
-2.50000000000000E+1
NdTemp 12 475 Fixed 0
-2.50000000000000E+1
NdTemp 12 476 Fixed 0
-2.50000000000000E+1
NdTemp 12 477 Fixed 0
-2.50000000000000E+1
NdTemp 12 478 Fixed 0
-2.50000000000000E+1
NdTemp 12 479 Fixed 0
-2.50000000000000E+1
NdTemp 12 480 Fixed 0
-2.50000000000000E+1
NdTemp 12 481 Fixed 0
-2.50000000000000E+1
NdTemp 12 482 Fixed 0
-2.50000000000000E+1
NdTemp 12 483 Fixed 0
-2.50000000000000E+1
NdTemp 12 484 Fixed 0
-2.50000000000000E+1
NdTemp 12 485 Fixed 0
-2.50000000000000E+1
NdTemp 12 486 Fixed 0
-2.50000000000000E+1
NdTemp 12 487 Fixed 0
-2.50000000000000E+1
NdTemp 12 488 Fixed 0
-2.50000000000000E+1
NdTemp 12 489 Fixed 0
-2.50000000000000E+1
NdTemp 12 490 Fixed 0

-2.50000000000000E+1
NdTemp 12 491 Fixed 0
-2.50000000000000E+1
NdTemp 12 492 Fixed 0
-2.50000000000000E+1
NdTemp 12 493 Fixed 0
-2.50000000000000E+1
NdTemp 12 494 Fixed 0
-2.50000000000000E+1
NdTemp 12 495 Fixed 0
-2.50000000000000E+1
NdTemp 12 496 Fixed 0
-2.50000000000000E+1
NdTemp 12 497 Fixed 0
-2.50000000000000E+1
NdTemp 12 498 Fixed 0
-2.50000000000000E+1
NdTemp 12 499 Fixed 0
-2.50000000000000E+1
NdTemp 12 500 Fixed 0
-2.50000000000000E+1
NdTemp 12 501 Fixed 0
-2.50000000000000E+1
NdTemp 12 502 Fixed 0
-2.50000000000000E+1
NdTemp 12 503 Fixed 0
-2.50000000000000E+1
NdTemp 12 504 Fixed 0
-2.50000000000000E+1
NdTemp 12 505 Fixed 0
-2.50000000000000E+1
NdTemp 12 506 Fixed 0
-2.50000000000000E+1
NdTemp 12 507 Fixed 0
-2.50000000000000E+1
NdTemp 12 508 Fixed 0
-2.50000000000000E+1
NdTemp 12 509 Fixed 0
-2.50000000000000E+1
NdTemp 12 510 Fixed 0
-2.50000000000000E+1
NdTemp 12 511 Fixed 0
-2.50000000000000E+1
NdTemp 12 512 Fixed 0
-2.50000000000000E+1
NdTemp 12 513 Fixed 0
-2.50000000000000E+1
NdTemp 12 514 Fixed 0
-2.50000000000000E+1
NdTemp 12 515 Fixed 0
-2.50000000000000E+1
NdTemp 12 516 Fixed 0
-2.50000000000000E+1
NdTemp 12 517 Fixed 0

-2.50000000000000E+1
NdTemp 12 518 Fixed 0
-2.50000000000000E+1
NdTemp 12 519 Fixed 0
-2.50000000000000E+1
NdTemp 12 520 Fixed 0
-2.50000000000000E+1
NdTemp 12 521 Fixed 0
-2.50000000000000E+1
NdTemp 12 522 Fixed 0
-2.50000000000000E+1
NdTemp 12 523 Fixed 0
-2.50000000000000E+1
NdTemp 12 524 Fixed 0
-2.50000000000000E+1
NdTemp 12 525 Fixed 0
-2.50000000000000E+1
NdTemp 12 526 Fixed 0
-2.50000000000000E+1
NdTemp 12 527 Fixed 0
-2.50000000000000E+1
NdTemp 12 528 Fixed 0
-2.50000000000000E+1
NdTemp 12 529 Fixed 0
-2.50000000000000E+1
NdTemp 12 530 Fixed 0
-2.50000000000000E+1
NdTemp 12 531 Fixed 0
-2.50000000000000E+1
NdTemp 12 532 Fixed 0
-2.50000000000000E+1
NdTemp 12 533 Fixed 0
-2.50000000000000E+1
NdTemp 12 534 Fixed 0
-2.50000000000000E+1
NdTemp 12 535 Fixed 0
-2.50000000000000E+1
NdTemp 12 536 Fixed 0
-2.50000000000000E+1
NdTemp 12 537 Fixed 0
-2.50000000000000E+1
NdTemp 12 538 Fixed 0
-2.50000000000000E+1
NdTemp 12 539 Fixed 0
-2.50000000000000E+1
NdTemp 12 540 Fixed 0
-2.50000000000000E+1
NdTemp 12 541 Fixed 0
-2.50000000000000E+1
NdTemp 12 542 Fixed 0
-2.50000000000000E+1
NdTemp 12 543 Fixed 0
-2.50000000000000E+1
NdTemp 12 544 Fixed 0

-2.50000000000000E+1
NdTemp 12 545 Fixed 0
-2.50000000000000E+1
NdTemp 12 546 Fixed 0
-2.50000000000000E+1
NdTemp 12 547 Fixed 0
-2.50000000000000E+1
NdTemp 12 548 Fixed 0
-2.50000000000000E+1
NdTemp 12 549 Fixed 0
-2.50000000000000E+1
NdTemp 12 550 Fixed 0
-2.50000000000000E+1
NdTemp 12 551 Fixed 0
-2.50000000000000E+1
NdTemp 12 552 Fixed 0
-2.50000000000000E+1
NdTemp 12 553 Fixed 0
-2.50000000000000E+1
NdTemp 12 554 Fixed 0
-2.50000000000000E+1
NdTemp 12 555 Fixed 0
-2.50000000000000E+1
NdTemp 12 556 Fixed 0
-2.50000000000000E+1
NdTemp 12 557 Fixed 0
-2.50000000000000E+1
NdTemp 12 558 Fixed 0
-2.50000000000000E+1
NdTemp 12 559 Fixed 0
-2.50000000000000E+1
NdTemp 12 560 Fixed 0
-2.50000000000000E+1
NdTemp 12 561 Fixed 0
-2.50000000000000E+1
NdTemp 12 562 Fixed 0
-2.50000000000000E+1
NdTemp 12 563 Fixed 0
-2.50000000000000E+1
NdTemp 12 564 Fixed 0
-2.50000000000000E+1
NdTemp 12 565 Fixed 0
-2.50000000000000E+1
NdTemp 12 566 Fixed 0
-2.50000000000000E+1
NdTemp 12 567 Fixed 0
-2.50000000000000E+1
NdTemp 12 568 Fixed 0
-2.50000000000000E+1
NdTemp 12 569 Fixed 0
-2.50000000000000E+1
NdTemp 12 570 Fixed 0
-2.50000000000000E+1
NdTemp 12 571 Fixed 0

-2.50000000000000E+1
NdTemp 12 572 Fixed 0
-2.50000000000000E+1
NdTemp 12 573 Fixed 0
-2.50000000000000E+1
NdTemp 12 574 Fixed 0
-2.50000000000000E+1
NdTemp 12 575 Fixed 0
-2.50000000000000E+1
NdTemp 12 576 Fixed 0
-2.50000000000000E+1
NdTemp 12 577 Fixed 0
-2.50000000000000E+1
NdTemp 12 578 Fixed 0
-2.50000000000000E+1
NdTemp 12 579 Fixed 0
-2.50000000000000E+1
NdTemp 12 580 Fixed 0
-2.50000000000000E+1
NdTemp 12 581 Fixed 0
-2.50000000000000E+1
NdTemp 12 582 Fixed 0
-2.50000000000000E+1
NdTemp 12 583 Fixed 0
-2.50000000000000E+1
NdTemp 12 584 Fixed 0
-2.50000000000000E+1
NdTemp 12 585 Fixed 0
-2.50000000000000E+1
NdTemp 12 586 Fixed 0
-2.50000000000000E+1
NdTemp 12 587 Fixed 0
-2.50000000000000E+1
NdTemp 12 588 Fixed 0
-2.50000000000000E+1
NdTemp 12 589 Fixed 0
-2.50000000000000E+1
NdTemp 12 590 Fixed 0
-2.50000000000000E+1
NdTemp 12 591 Fixed 0
-2.50000000000000E+1
NdTemp 12 592 Fixed 0
-2.50000000000000E+1
NdTemp 12 593 Fixed 0
-2.50000000000000E+1
NdTemp 12 594 Fixed 0
-2.50000000000000E+1
NdTemp 12 595 Fixed 0
-2.50000000000000E+1
NdTemp 12 596 Fixed 0
-2.50000000000000E+1
NdTemp 12 597 Fixed 0
-2.50000000000000E+1
NdTemp 12 598 Fixed 0

-2.50000000000000E+1
NdTemp 12 599 Fixed 0
-2.50000000000000E+1
NdTemp 12 600 Fixed 0
-2.50000000000000E+1
NdTemp 12 601 Fixed 0
-2.50000000000000E+1
NdTemp 12 602 Fixed 0
-2.50000000000000E+1
NdTemp 12 603 Fixed 0
-2.50000000000000E+1
NdTemp 12 604 Fixed 0
-2.50000000000000E+1
NdTemp 12 605 Fixed 0
-2.50000000000000E+1
NdTemp 12 606 Fixed 0
-2.50000000000000E+1
NdTemp 12 607 Fixed 0
-2.50000000000000E+1
NdTemp 12 608 Fixed 0
-2.50000000000000E+1
NdTemp 12 609 Fixed 0
-2.50000000000000E+1
NdTemp 12 610 Fixed 0
-2.50000000000000E+1
NdTemp 12 611 Fixed 0
-2.50000000000000E+1
NdTemp 12 612 Fixed 0
-2.50000000000000E+1
NdTemp 12 613 Fixed 0
-2.50000000000000E+1
NdTemp 12 614 Fixed 0
-2.50000000000000E+1
NdTemp 12 615 Fixed 0
-2.50000000000000E+1
NdTemp 12 616 Fixed 0
-2.50000000000000E+1
NdTemp 12 617 Fixed 0
-2.50000000000000E+1
NdTemp 12 618 Fixed 0
-2.50000000000000E+1
NdTemp 12 619 Fixed 0
-2.50000000000000E+1
NdTemp 12 620 Fixed 0
-2.50000000000000E+1
NdTemp 12 621 Fixed 0
-2.50000000000000E+1
NdTemp 12 622 Fixed 0
-2.50000000000000E+1
NdTemp 12 623 Fixed 0
-2.50000000000000E+1
NdTemp 12 624 Fixed 0
-2.50000000000000E+1
NdTemp 12 625 Fixed 0

-2.50000000000000E+1
NdTemp 12 626 Fixed 0
-2.50000000000000E+1
NdTemp 12 627 Fixed 0
-2.50000000000000E+1
NdTemp 12 628 Fixed 0
-2.50000000000000E+1
NdTemp 12 629 Fixed 0
-2.50000000000000E+1
NdTemp 12 630 Fixed 0
-2.50000000000000E+1
NdTemp 12 631 Fixed 0
-2.50000000000000E+1
NdTemp 12 632 Fixed 0
-2.50000000000000E+1
NdTemp 12 633 Fixed 0
-2.50000000000000E+1
NdTemp 12 634 Fixed 0
-2.50000000000000E+1
NdTemp 12 635 Fixed 0
-2.50000000000000E+1
NdTemp 12 636 Fixed 0
-2.50000000000000E+1
NdTemp 12 637 Fixed 0
-2.50000000000000E+1
NdTemp 12 638 Fixed 0
-2.50000000000000E+1
NdTemp 12 639 Fixed 0
-2.50000000000000E+1
NdTemp 12 640 Fixed 0
-2.50000000000000E+1
NdTemp 12 641 Fixed 0
-2.50000000000000E+1
NdTemp 12 642 Fixed 0
-2.50000000000000E+1
NdTemp 12 643 Fixed 0
-2.50000000000000E+1
NdTemp 12 644 Fixed 0
-2.50000000000000E+1
NdTemp 12 645 Fixed 0
-2.50000000000000E+1
NdTemp 12 646 Fixed 0
-2.50000000000000E+1
NdTemp 12 647 Fixed 0
-2.50000000000000E+1
NdTemp 12 648 Fixed 0
-2.50000000000000E+1
NdTemp 12 649 Fixed 0
-2.50000000000000E+1
NdTemp 12 650 Fixed 0
-2.50000000000000E+1
NdTemp 12 651 Fixed 0
-2.50000000000000E+1
NdTemp 12 652 Fixed 0

-2.50000000000000E+1
NdTemp 12 653 Fixed 0
-2.50000000000000E+1
NdTemp 12 654 Fixed 0
-2.50000000000000E+1
NdTemp 12 655 Fixed 0
-2.50000000000000E+1
NdTemp 12 656 Fixed 0
-2.50000000000000E+1
NdTemp 12 657 Fixed 0
-2.50000000000000E+1
NdTemp 12 658 Fixed 0
-2.50000000000000E+1
NdTemp 12 659 Fixed 0
-2.50000000000000E+1
NdTemp 12 660 Fixed 0
-2.50000000000000E+1
NdTemp 12 661 Fixed 0
-2.50000000000000E+1
NdTemp 12 662 Fixed 0
-2.50000000000000E+1
NdTemp 12 663 Fixed 0
-2.50000000000000E+1
NdTemp 12 664 Fixed 0
-2.50000000000000E+1
NdTemp 12 665 Fixed 0
-2.50000000000000E+1
NdTemp 12 666 Fixed 0
-2.50000000000000E+1
NdTemp 12 667 Fixed 0
-2.50000000000000E+1
NdTemp 12 668 Fixed 0
-2.50000000000000E+1
NdTemp 12 669 Fixed 0
-2.50000000000000E+1
NdTemp 12 670 Fixed 0
-2.50000000000000E+1
NdTemp 12 671 Fixed 0
-2.50000000000000E+1
NdTemp 12 672 Fixed 0
-2.50000000000000E+1
NdTemp 12 673 Fixed 0
-2.50000000000000E+1
NdTemp 12 674 Fixed 0
-2.50000000000000E+1
NdTemp 12 675 Fixed 0
-2.50000000000000E+1
NdTemp 12 676 Fixed 0
-2.50000000000000E+1
NdTemp 12 677 Fixed 0
-2.50000000000000E+1
NdTemp 12 678 Fixed 0
-2.50000000000000E+1
NdTemp 12 679 Fixed 0

-2.50000000000000E+1
NdTemp 12 680 Fixed 0
-2.50000000000000E+1
NdTemp 12 681 Fixed 0
-2.50000000000000E+1
NdTemp 12 682 Fixed 0
-2.50000000000000E+1
NdTemp 12 683 Fixed 0
-2.50000000000000E+1
NdTemp 12 684 Fixed 0
-2.50000000000000E+1
NdTemp 12 685 Fixed 0
-2.50000000000000E+1
NdTemp 12 686 Fixed 0
-2.50000000000000E+1
NdTemp 12 687 Fixed 0
-2.50000000000000E+1
NdTemp 12 688 Fixed 0
-2.50000000000000E+1
NdTemp 12 689 Fixed 0
-2.50000000000000E+1
NdTemp 12 690 Fixed 0
-2.50000000000000E+1
NdTemp 12 691 Fixed 0
-2.50000000000000E+1
NdTemp 12 692 Fixed 0
-2.50000000000000E+1
NdTemp 12 693 Fixed 0
-2.50000000000000E+1
NdTemp 12 694 Fixed 0
-2.50000000000000E+1
NdTemp 12 695 Fixed 0
-2.50000000000000E+1
NdTemp 12 696 Fixed 0
-2.50000000000000E+1
NdTemp 12 697 Fixed 0
-2.50000000000000E+1
NdTemp 12 698 Fixed 0
-2.50000000000000E+1
NdTemp 12 699 Fixed 0
-2.50000000000000E+1
NdTemp 12 700 Fixed 0
-2.50000000000000E+1
NdTemp 12 701 Fixed 0
-2.50000000000000E+1
NdTemp 12 702 Fixed 0
-2.50000000000000E+1
NdTemp 12 703 Fixed 0
-2.50000000000000E+1
NdTemp 12 704 Fixed 0
-2.50000000000000E+1
NdTemp 12 705 Fixed 0
-2.50000000000000E+1
NdTemp 12 706 Fixed 0

-2.50000000000000E+1
NdTemp 12 707 Fixed 0
-2.50000000000000E+1
NdTemp 12 708 Fixed 0
-2.50000000000000E+1
NdTemp 12 709 Fixed 0
-2.50000000000000E+1
NdTemp 12 710 Fixed 0
-2.50000000000000E+1
NdTemp 12 711 Fixed 0
-2.50000000000000E+1
NdTemp 12 712 Fixed 0
-2.50000000000000E+1
NdTemp 12 713 Fixed 0
-2.50000000000000E+1
NdTemp 12 714 Fixed 0
-2.50000000000000E+1
NdTemp 12 715 Fixed 0
-2.50000000000000E+1
NdTemp 12 716 Fixed 0
-2.50000000000000E+1
NdTemp 12 717 Fixed 0
-2.50000000000000E+1
NdTemp 12 718 Fixed 0
-2.50000000000000E+1
NdTemp 12 719 Fixed 0
-2.50000000000000E+1
NdTemp 12 720 Fixed 0
-2.50000000000000E+1
NdTemp 12 721 Fixed 0
-2.50000000000000E+1
NdTemp 12 722 Fixed 0
-2.50000000000000E+1
NdTemp 12 723 Fixed 0
-2.50000000000000E+1
NdTemp 12 724 Fixed 0
-2.50000000000000E+1
NdTemp 12 725 Fixed 0
-2.50000000000000E+1
NdTemp 12 726 Fixed 0
-2.50000000000000E+1
NdTemp 12 727 Fixed 0
-2.50000000000000E+1
NdTemp 12 728 Fixed 0
-2.50000000000000E+1
NdTemp 12 729 Fixed 0
-2.50000000000000E+1
NdTemp 12 730 Fixed 0
-2.50000000000000E+1
NdTemp 12 731 Fixed 0
-2.50000000000000E+1
NdTemp 12 732 Fixed 0
-2.50000000000000E+1
NdTemp 12 733 Fixed 0

-2.50000000000000E+1
NdTemp 12 734 Fixed 0
-2.50000000000000E+1
NdTemp 12 735 Fixed 0
-2.50000000000000E+1
NdTemp 12 736 Fixed 0
-2.50000000000000E+1
NdTemp 12 737 Fixed 0
-2.50000000000000E+1
NdTemp 12 738 Fixed 0
-2.50000000000000E+1
NdTemp 12 739 Fixed 0
-2.50000000000000E+1
NdTemp 12 740 Fixed 0
-2.50000000000000E+1
NdTemp 12 741 Fixed 0
-2.50000000000000E+1
NdTemp 12 742 Fixed 0
-2.50000000000000E+1
NdTemp 12 743 Fixed 0
-2.50000000000000E+1
NdTemp 12 744 Fixed 0
-2.50000000000000E+1
NdTemp 12 745 Fixed 0
-2.50000000000000E+1
NdTemp 12 746 Fixed 0
-2.50000000000000E+1
NdTemp 12 747 Fixed 0
-2.50000000000000E+1
NdTemp 12 748 Fixed 0
-2.50000000000000E+1
NdTemp 12 749 Fixed 0
-2.50000000000000E+1
NdTemp 12 750 Fixed 0
-2.50000000000000E+1
NdTemp 12 751 Fixed 0
-2.50000000000000E+1
NdTemp 12 752 Fixed 0
-2.50000000000000E+1
NdTemp 12 753 Fixed 0
-2.50000000000000E+1
NdTemp 12 754 Fixed 0
-2.50000000000000E+1
NdTemp 12 755 Fixed 0
-2.50000000000000E+1
NdTemp 12 756 Fixed 0
-2.50000000000000E+1
NdTemp 12 757 Fixed 0
-2.50000000000000E+1
NdTemp 12 758 Fixed 0
-2.50000000000000E+1
NdTemp 12 759 Fixed 0
-2.50000000000000E+1
NdTemp 12 760 Fixed 0

-2.50000000000000E+1
NdTemp 12 761 Fixed 0
-2.50000000000000E+1
NdTemp 12 762 Fixed 0
-2.50000000000000E+1
NdTemp 12 763 Fixed 0
-2.50000000000000E+1
NdTemp 12 764 Fixed 0
-2.50000000000000E+1
NdTemp 12 765 Fixed 0
-2.50000000000000E+1
NdTemp 12 766 Fixed 0
-2.50000000000000E+1
NdTemp 12 767 Fixed 0
-2.50000000000000E+1
NdTemp 12 768 Fixed 0
-2.50000000000000E+1
NdTemp 12 769 Fixed 0
-2.50000000000000E+1
NdTemp 12 770 Fixed 0
-2.50000000000000E+1
NdTemp 12 771 Fixed 0
-2.50000000000000E+1
NdTemp 12 772 Fixed 0
-2.50000000000000E+1
NdTemp 12 773 Fixed 0
-2.50000000000000E+1
NdTemp 12 774 Fixed 0
-2.50000000000000E+1
NdTemp 12 775 Fixed 0
-2.50000000000000E+1
NdTemp 12 776 Fixed 0
-2.50000000000000E+1
NdTemp 12 777 Fixed 0
-2.50000000000000E+1
NdTemp 12 778 Fixed 0
-2.50000000000000E+1
NdTemp 12 779 Fixed 0
-2.50000000000000E+1
NdTemp 12 780 Fixed 0
-2.50000000000000E+1
NdTemp 12 781 Fixed 0
-2.50000000000000E+1
NdTemp 12 782 Fixed 0
-2.50000000000000E+1
NdTemp 12 783 Fixed 0
-2.50000000000000E+1
NdTemp 12 784 Fixed 0
-2.50000000000000E+1
NdTemp 12 785 Fixed 0
-2.50000000000000E+1
NdTemp 12 786 Fixed 0
-2.50000000000000E+1
NdTemp 12 787 Fixed 0

-2.50000000000000E+1
NdTemp 12 788 Fixed 0
-2.50000000000000E+1
NdTemp 12 789 Fixed 0
-2.50000000000000E+1
NdTemp 12 790 Fixed 0
-2.50000000000000E+1
NdTemp 12 791 Fixed 0
-2.50000000000000E+1
NdTemp 12 792 Fixed 0
-2.50000000000000E+1
NdTemp 12 793 Fixed 0
-2.50000000000000E+1
NdTemp 12 794 Fixed 0
-2.50000000000000E+1
NdTemp 12 795 Fixed 0
-2.50000000000000E+1
NdTemp 12 796 Fixed 0
-2.50000000000000E+1
NdTemp 12 797 Fixed 0
-2.50000000000000E+1
NdTemp 12 798 Fixed 0
-2.50000000000000E+1
NdTemp 12 799 Fixed 0
-2.50000000000000E+1
NdTemp 12 800 Fixed 0
-2.50000000000000E+1
NdTemp 12 801 Fixed 0
-2.50000000000000E+1
NdTemp 12 802 Fixed 0
-2.50000000000000E+1
NdTemp 12 803 Fixed 0
-2.50000000000000E+1
NdTemp 12 804 Fixed 0
-2.50000000000000E+1
NdTemp 12 805 Fixed 0
-2.50000000000000E+1
NdTemp 12 806 Fixed 0
-2.50000000000000E+1
NdTemp 12 807 Fixed 0
-2.50000000000000E+1
NdTemp 12 808 Fixed 0
-2.50000000000000E+1
NdTemp 12 809 Fixed 0
-2.50000000000000E+1
NdTemp 12 810 Fixed 0
-2.50000000000000E+1
NdTemp 12 811 Fixed 0
-2.50000000000000E+1
NdTemp 12 812 Fixed 0
-2.50000000000000E+1
NdTemp 12 813 Fixed 0
-2.50000000000000E+1
NdTemp 12 814 Fixed 0

```
-2.50000000000000E+1
   NdTemp                  12     815      Fixed        0
-2.50000000000000E+1
   NdTemp                  12     816      Fixed        0
-2.50000000000000E+1
   NdTemp                  12     817      Fixed        0
-2.50000000000000E+1
   NdTemp                  12     818      Fixed        0
-2.50000000000000E+1

/ ____________________________________________________________________________
/ BEAM PROPERTIES

   BeamProp                 1    16737843   "Trave_Principale"
     MaterialName       "Structural Steelwork (AS 4100-1998) - Modified"
     Modulus              2.06000000000000E+5
     ShearMod             1.52000000000000E+6
     Poisson              3.00000000000000E-1
     UsePoisson         FALSE
     Density              9.00000000000000E+3
     Expansion            1.17000000000000E-5
     ThermalCond          5.40000000000000E+1
     SpecificHeat         4.65000000000000E+2
     InstantAlpha       FALSE
     Area                 6.64000000000000E-2
     MomentI11            2.23346133330000E-2
     MomentI22            8.34213333000000E-4
     MomentJ              2.48533330000000E-5
     ShearArea1           3.62274792170000E-2
     ShearArea2           2.76045816560000E-2
     SectionType        IBeam
       B1                 5.00000000000000E-1
       B2                 5.00000000000000E-1
       D                  1.40000000000000E+0
       T1                 4.00000000000000E-2
       T2                 4.00000000000000E-2
       T3                 2.00000000000000E-2
       CT               FALSE
     TimeDependentMod   Elastic
     UseMomCurv         FALSE
     NonLinType         Elasticplastic
     Hardening          Isotropic

   BeamProp                 2     3375359   "Traversi"
     MaterialName       "Structural Steelwork (AS 4100-1998) - Modified"
     Modulus              2.06000000000000E+5
     ShearMod             8.00000000000000E+4
     Poisson              3.00000000000000E-1
     UsePoisson         TRUE
     Density              9.00000000000000E+3
     Expansion            1.17000000000000E-5
     ThermalCond          5.40000000000000E+1
     SpecificHeat         4.65000000000000E+2
     InstantAlpha       FALSE
```

```
  Area                  5.68000000000000E-2
  MomentI11             1.80891733330000E-2
  MomentI22             6.25893333000000E-4
  MomentJ               1.25733330000000E-5
  ShearArea1            2.72325475390000E-2
  ShearArea2            2.75632291170000E-2
  SectionType         IBeam
    B1                  5.00000000000000E-1
    B2                  5.00000000000000E-1
    D                   1.40000000000000E+0
    T1                  3.00000000000000E-2
    T2                  3.00000000000000E-2
    T3                  2.00000000000000E-2
    CT                FALSE
  TimeDependentMod    Elastic
  UseMomCurv          FALSE
  NonLinType          Elasticplastic
  Hardening           Isotropic

BeamProp                  3     3407692   "Montante"
  MaterialName        "Structural Steelwork (AS 4100-1998) - Modified"
  Modulus               2.06000000000000E+5
  ShearMod              8.00000000000000E+4
  Poisson               3.00000000000000E-1
  UsePoisson          TRUE
  Density               9.00000000000000E+3
  Expansion             1.17000000000000E-5
  ThermalCond           5.40000000000000E+1
  SpecificHeat          4.65000000000000E+2
  InstantAlpha        FALSE
  Area                  3.19000000000000E-2
  MomentI11             8.49000000000000E-4
  MomentI22             1.95000000000000E-4
  MomentJ               1.41000000000000E-5
  ShearArea1            2.08262553580000E-2
  ShearArea2            7.51910694100000E-3
  SectionType         IBeam
    B1                  3.08000000000000E-1
    B2                  3.08000000000000E-1
    D                   3.95000000000000E-1
    T1                  4.00000000000000E-2
    T2                  4.00000000000000E-2
    T3                  2.10000000000000E-2
    CT                FALSE
  TimeDependentMod    Elastic
  UseMomCurv          FALSE
  NonLinType          Elasticplastic
  Hardening           Isotropic

BeamProp                  4     3407846   "Travi copertura"
  MaterialName        "Structural Steelwork (AS 4100-1998) - Modified"
  Modulus               2.06000000000000E+5
  ShearMod              8.00000000000000E+4
  Poisson               3.00000000000000E-1
```

```
  UsePoisson          TRUE
  Density               9.00000000000000E+3
  Expansion             1.17000000000000E-5
  ThermalCond           5.40000000000000E+1
  SpecificHeat          4.65000000000000E+2
  InstantAlpha        FALSE
  Area                  1.81000000000000E-2
  MomentI11             4.32000000000000E-4
  MomentI22             1.01000000000000E-4
  MomentJ               2.48000000000000E-6
  ShearArea1            1.13550427490000E-2
  ShearArea2            4.10301432500000E-3
  SectionType         IBeam
    B1                  3.00000000000000E-1
    B2                  3.00000000000000E-1
    D                   3.60000000000000E-1
    T1                  2.25000000000000E-2
    T2                  2.25000000000000E-2
    T3                  1.25000000000000E-2
    CT                FALSE
  TimeDependentMod    Elastic
  UseMomCurv          FALSE
  NonLinType          Elasticplastic
  Hardening           Isotropic

BeamProp                  5    16757299   "HBR-UPN300"
  MaterialName        "Structural Steelwork (AS 4100-1998) - Modified"
  Modulus               2.06000000000000E+5
  ShearMod              8.00000000000000E+4
  Poisson               3.00000000000000E-1
  UsePoisson          TRUE
  Density               9.00000000000000E+3
  Expansion             1.17000000000000E-5
  ThermalCond           5.40000000000000E+1
  SpecificHeat          4.65000000000000E+2
  InstantAlpha        FALSE
  Area                  5.88000000000000E-3
  MomentI11             8.03000000000000E-5
  MomentI22             4.95000000000000E-6
  MomentJ               3.40799000000000E-7
  ShearLength1         -5.41000000000000E-2
  ShearArea1            1.44163297500000E-3
  ShearArea2            2.66286057100000E-3
  SectionType         LipChannel
    B                   1.00000000000000E-1
    D                   3.00000000000000E-1
    T1                  1.60000000000000E-2
    T2                  1.00000000000000E-2
    CT                FALSE
  TimeDependentMod    Elastic
  UseMomCurv          FALSE
  NonLinType          Elasticplastic
  Hardening           Isotropic
```

```
   TrussProp                 9    16724812   "PBR"
     MaterialName       "Structural Steelwork (AS 4100-1998) - Modified"
     Modulus              2.06000000000000E+5
     ShearMod             8.00000000000000E+4
     Poisson              3.00000000000000E-1
     UsePoisson         TRUE
     Density              9.00000000000000E+3
     Expansion            1.17000000000000E-5
     ThermalCond          5.40000000000000E+1
     SpecificHeat         4.65000000000000E+2
     InstantAlpha       FALSE
     Area                 6.84000000000000E-4
     MomentJ              8.20800000000000E-9
     SectionType        Angle
       B                  6.00000000000000E-2
       D                  6.00000000000000E-2
       T1                 6.00000000000000E-3
       T2                 6.00000000000000E-3
       CT               FALSE
     IncludeTorsion     FALSE
     TimeDependentMod   Elastic
     NonLinType         Elasticplastic
     Hardening          Isotropic


/ ____________________________________________________________________________
/ PLATE PROPERTIES

   PatchPlateProp           1    16737843   "Plate Property 1"
     PatchTol             1.00000000000000E-4

   PatchPlateProp           2     3355647   "Load_Patch"
     PatchTol             1.00000000000000E-4


/ ____________________________________________________________________________
/ LINEAR STATIC SOLVER DATA

   LoadFreedomSetLSA        1   ON
      1       2       3       4       5       6       7       9
      8      10      11      12


/ ____________________________________________________________________________
/ LINEAR BUCKLING SOLVER DATA

   BuckNumModes             4

   BuckShift              0.00000000000000E+0


/ ____________________________________________________________________________
/ LOAD INFLUENCE SOLVER DATA
```

```
   LoadFreedomSetLIA        1   ON
      1


/ ____________________________________________________________________________
/ NON-LINEAR STATIC SOLVER DATA

   NonLinearIncrement       0   Yes  "SLU_000"
      LON1    1.35000000000000E+0
      LON2    1.35000000000000E+0
      LON3    1.50000000000000E+0
      FON1    0.00000000000000E+0

   NonLinearIncrement       0   Yes  "SLU_001"
      LON1    1.35000000000000E+0
      LON2    1.35000000000000E+0
      LON4    1.50000000000000E+0

   NonLinearIncrement       0   Yes  "SLU_01"
      LON1    1.35000000000000E+0
      LON2    1.35000000000000E+0
      LON3    1.50000000000000E+0
      LON5    1.50000000000000E+0

   NonLinearIncrement       0   Yes  "SLU_02"
      LON1    1.35000000000000E+0
      LON2    1.35000000000000E+0
      LON4    1.50000000000000E+0
      LON5    1.50000000000000E+0

   NonLinearIncrement       0   Yes  "SLU_03"
      LON1    1.35000000000000E+0
      LON2    1.35000000000000E+0
      LON3    1.50000000000000E+0
      LON6    1.50000000000000E+0

   NonLinearIncrement       0   Yes  "SLU_04"
      LON1    1.35000000000000E+0
      LON2    1.35000000000000E+0
      LON4    1.50000000000000E+0
      LON6    1.50000000000000E+0

   NonLinearIncrement       0   Yes  "SLU_05"
      LON1    1.35000000000000E+0
      LON2    1.35000000000000E+0
      LON3    1.50000000000000E+0
      LON7    1.50000000000000E+0

   NonLinearIncrement       0   Yes  "SLU_06"
      LON1    1.35000000000000E+0
      LON2    1.35000000000000E+0
      LON4    1.50000000000000E+0
      LON7    1.50000000000000E+0
```

```
NonLinearIncrement       0   Yes  "SLU_07"
   LON1    1.35000000000000E+0
   LON2    1.35000000000000E+0
   LON3    1.50000000000000E+0
   LON9    1.50000000000000E+0

NonLinearIncrement       0   Yes  "SLU_08"
   LON1    1.35000000000000E+0
   LON2    1.35000000000000E+0
   LON4    1.50000000000000E+0
   LON9    1.50000000000000E+0

NonLinearIncrement       0   Yes  "SLU_09"
   LON1    1.35000000000000E+0
   LON2    1.35000000000000E+0
   LON3    1.50000000000000E+0
   LON8    1.45000000000000E+0

NonLinearIncrement       0   Yes  "SLU_10"
   LON1    1.35000000000000E+0
   LON2    1.35000000000000E+0
   LON4    1.50000000000000E+0
   LON8    1.45000000000000E+0

NonLinearIncrement       0   Yes  "SLU_11"
   LON1    1.35000000000000E+0
   LON2    1.35000000000000E+0
   LON3    1.50000000000000E+0
   LON10    1.45000000000000E+0

NonLinearIncrement       0   Yes  "SLU_12"
   LON1    1.35000000000000E+0
   LON2    1.35000000000000E+0
   LON4    1.50000000000000E+0
   LON10    1.45000000000000E+0

NonLinearIncrement       0   Yes  "SLU_13"
   LON1    1.35000000000000E+0
   LON2    1.35000000000000E+0
   LON3    1.50000000000000E+0
   LON11    1.50000000000000E+0

NonLinearIncrement       0   Yes  "SLU_14"
   LON1    1.35000000000000E+0
   LON2    1.35000000000000E+0
   LON4    1.50000000000000E+0
   LON11    1.50000000000000E+0

NonLinearIncrement       0   Yes  "SLU_15"
   LON1    1.35000000000000E+0
   LON2    1.35000000000000E+0
   LON3    1.50000000000000E+0
   LON12    1.50000000000000E+0
```

```
NonLinearIncrement       0   Yes  "SLU_16"
   LON1    1.35000000000000E+0
   LON2    1.35000000000000E+0
   LON4    1.50000000000000E+0
   LON12    1.50000000000000E+0

NonLinearIncrement       0   Yes  "SLU_17"
   LON1    1.35000000000000E+0
   LON2    1.35000000000000E+0
   LON3    1.50000000000000E+0
   LON5    1.50000000000000E+0
   LON7    9.00000000000000E-1

NonLinearIncrement       0   Yes  "SLU_18"
   LON1    1.35000000000000E+0
   LON2    1.35000000000000E+0
   LON4    1.50000000000000E+0
   LON5    1.50000000000000E+0
   LON7    9.00000000000000E-1

NonLinearIncrement       0   Yes  "SLU_19"
   LON1    1.35000000000000E+0
   LON2    1.35000000000000E+0
   LON3    1.50000000000000E+0
   LON5    1.50000000000000E+0
   LON9    9.00000000000000E-1

NonLinearIncrement       0   Yes  "SLU_20"
   LON1    1.35000000000000E+0
   LON2    1.35000000000000E+0
   LON4    1.50000000000000E+0
   LON5    1.50000000000000E+0
   LON9    9.00000000000000E-1

NonLinearIncrement       0   Yes  "SLU_21"
   LON1    1.35000000000000E+0
   LON2    1.35000000000000E+0
   LON3    1.50000000000000E+0
   LON5    1.50000000000000E+0
   LON11    9.00000000000000E-1

NonLinearIncrement       0   Yes  "SLU_22"
   LON1    1.35000000000000E+0
   LON2    1.35000000000000E+0
   LON4    1.50000000000000E+0
   LON5    1.50000000000000E+0
   LON11    9.00000000000000E-1

NonLinearIncrement       0   Yes  "SLU_23"
   LON1    1.35000000000000E+0
   LON2    1.35000000000000E+0
   LON3    1.50000000000000E+0
   LON5    1.50000000000000E+0
   LON12    9.00000000000000E-1
```

```
NonLinearIncrement       0   Yes  "SLU_24"
   LON1    1.35000000000000E+0
   LON2    1.35000000000000E+0
   LON4    1.50000000000000E+0
   LON5    1.50000000000000E+0
   LON12    9.00000000000000E-1

NonLinearIncrement       0   Yes  "SLU_25"
   LON1    1.35000000000000E+0
   LON2    1.35000000000000E+0
   LON3    1.50000000000000E+0
   LON5    1.50000000000000E+0
   LON7    9.00000000000000E-1
   LON11    9.00000000000000E-1

NonLinearIncrement       0   Yes  "SLU_26"
   LON1    1.35000000000000E+0
   LON2    1.35000000000000E+0
   LON4    1.50000000000000E+0
   LON5    1.50000000000000E+0
   LON7    9.00000000000000E-1
   LON11    9.00000000000000E-1

NonLinearIncrement       0   Yes  "SLU_27"
   LON1    1.35000000000000E+0
   LON2    1.35000000000000E+0
   LON3    1.50000000000000E+0
   LON5    1.50000000000000E+0
   LON9    9.00000000000000E-1
   LON12    9.00000000000000E-1

NonLinearIncrement       0   Yes  "SLU_28"
   LON1    1.35000000000000E+0
   LON2    1.35000000000000E+0
   LON4    1.50000000000000E+0
   LON5    1.50000000000000E+0
   LON9    9.00000000000000E-1
   LON12    9.00000000000000E-1

NonLinearIncrement       0   Yes  "SLU_29"
   LON1    1.35000000000000E+0
   LON2    1.35000000000000E+0
   LON3    1.50000000000000E+0
   LON6    1.50000000000000E+0
   LON7    9.00000000000000E-1

NonLinearIncrement       0   Yes  "SLU_30"
   LON1    1.35000000000000E+0
   LON2    1.35000000000000E+0
   LON4    1.50000000000000E+0
   LON6    1.50000000000000E+0
   LON7    9.00000000000000E-1
```

```
NonLinearIncrement       0   Yes  "SLU_31"
   LON1    1.35000000000000E+0
   LON2    1.35000000000000E+0
   LON3    1.50000000000000E+0
   LON6    1.50000000000000E+0
   LON9    9.00000000000000E-1

NonLinearIncrement       0   Yes  "SLU_32"
   LON1    1.35000000000000E+0
   LON2    1.35000000000000E+0
   LON4    1.50000000000000E+0
   LON6    1.50000000000000E+0
   LON9    9.00000000000000E-1

NonLinearIncrement       0   Yes  "SLU_33"
   LON1    1.35000000000000E+0
   LON2    1.35000000000000E+0
   LON3    1.50000000000000E+0
   LON6    1.50000000000000E+0
   LON8    1.16000000000000E+0

NonLinearIncrement       0   Yes  "SLU_34"
   LON1    1.35000000000000E+0
   LON2    1.35000000000000E+0
   LON4    1.50000000000000E+0
   LON6    1.50000000000000E+0
   LON8    1.16000000000000E+0

NonLinearIncrement       0   Yes  "SLU_35"
   LON1    1.35000000000000E+0
   LON2    1.35000000000000E+0
   LON3    1.50000000000000E+0
   LON6    1.50000000000000E+0
   LON10    1.16000000000000E+0

NonLinearIncrement       0   Yes  "SLU_36"
   LON1    1.35000000000000E+0
   LON2    1.35000000000000E+0
   LON4    1.50000000000000E+0
   LON6    1.50000000000000E+0
   LON10    1.16000000000000E+0

NonLinearIncrement       0   Yes  "SLU_37"
   LON1    1.35000000000000E+0
   LON2    1.35000000000000E+0
   LON3    1.50000000000000E+0
   LON6    1.50000000000000E+0
   LON11    9.00000000000000E-1

NonLinearIncrement       0   Yes  "SLU_38"
   LON1    1.35000000000000E+0
   LON2    1.35000000000000E+0
   LON4    1.50000000000000E+0
   LON6    1.50000000000000E+0
```

```
   LON11    9.00000000000000E-1

NonLinearIncrement       0   Yes  "SLU_39"
   LON1    1.35000000000000E+0
   LON2    1.35000000000000E+0
   LON3    1.50000000000000E+0
   LON6    1.50000000000000E+0
   LON12    9.00000000000000E-1

NonLinearIncrement       0   Yes  "SLU_40"
   LON1    1.35000000000000E+0
   LON2    1.35000000000000E+0
   LON4    1.50000000000000E+0
   LON6    1.50000000000000E+0
   LON12    9.00000000000000E-1

NonLinearIncrement       0   Yes  "SLU_41"
   LON1    1.35000000000000E+0
   LON2    1.35000000000000E+0
   LON3    1.50000000000000E+0
   LON6    1.50000000000000E+0
   LON7    9.00000000000000E-1
   LON8    1.16000000000000E+0

NonLinearIncrement       0   Yes  "SLU_42"
   LON1    1.35000000000000E+0
   LON2    1.35000000000000E+0
   LON4    1.50000000000000E+0
   LON6    1.50000000000000E+0
   LON7    9.00000000000000E-1
   LON8    1.16000000000000E+0

NonLinearIncrement       0   Yes  "SLU_43"
   LON1    1.35000000000000E+0
   LON2    1.35000000000000E+0
   LON3    1.50000000000000E+0
   LON6    1.50000000000000E+0
   LON9    9.00000000000000E-1
   LON10    1.16000000000000E+0

NonLinearIncrement       0   Yes  "SLU_44"
   LON1    1.35000000000000E+0
   LON2    1.35000000000000E+0
   LON4    1.50000000000000E+0
   LON6    1.50000000000000E+0
   LON9    9.00000000000000E-1
   LON10    1.16000000000000E+0

NonLinearIncrement       0   Yes  "SLU_45"
   LON1    1.35000000000000E+0
   LON2    1.35000000000000E+0
   LON3    1.50000000000000E+0
   LON6    1.50000000000000E+0
   LON7    9.00000000000000E-1
```

```
   LON11    9.00000000000000E-1

NonLinearIncrement       0   Yes  "SLU_46"
   LON1    1.35000000000000E+0
   LON2    1.35000000000000E+0
   LON4    1.50000000000000E+0
   LON6    1.50000000000000E+0
   LON7    9.00000000000000E-1
   LON11    9.00000000000000E-1

NonLinearIncrement       0   Yes  "SLU_47"
   LON1    1.35000000000000E+0
   LON2    1.35000000000000E+0
   LON3    1.50000000000000E+0
   LON6    1.50000000000000E+0
   LON9    9.00000000000000E-1
   LON12    9.00000000000000E-1

NonLinearIncrement       0   Yes  "SLU_48"
   LON1    1.35000000000000E+0
   LON2    1.35000000000000E+0
   LON4    1.50000000000000E+0
   LON6    1.50000000000000E+0
   LON9    9.00000000000000E-1
   LON12    9.00000000000000E-1

NonLinearIncrement       0   Yes  "SLU_49"
   LON1    1.35000000000000E+0
   LON2    1.35000000000000E+0
   LON3    1.50000000000000E+0
   LON6    1.50000000000000E+0
   LON8    1.16000000000000E+0
   LON11    9.00000000000000E-1

NonLinearIncrement       0   Yes  "SLU_50"
   LON1    1.35000000000000E+0
   LON2    1.35000000000000E+0
   LON4    1.50000000000000E+0
   LON6    1.50000000000000E+0
   LON8    1.16000000000000E+0
   LON11    9.00000000000000E-1

NonLinearIncrement       0   Yes  "SLU_51"
   LON1    1.35000000000000E+0
   LON2    1.35000000000000E+0
   LON3    1.50000000000000E+0
   LON6    1.50000000000000E+0
   LON10    1.16000000000000E+0
   LON12    9.00000000000000E-1

NonLinearIncrement       0   Yes  "SLU_52"
   LON1    1.35000000000000E+0
   LON2    1.35000000000000E+0
   LON4    1.50000000000000E+0
```

```
   LON6    1.50000000000000E+0
   LON10    1.16000000000000E+0
   LON12    9.00000000000000E-1

NonLinearIncrement       0   Yes  "SLU_53"
   LON1    1.35000000000000E+0
   LON2    1.35000000000000E+0
   LON3    1.50000000000000E+0
   LON6    1.50000000000000E+0
   LON7    9.00000000000000E-1
   LON8    1.16000000000000E+0
   LON11    9.00000000000000E-1

NonLinearIncrement       0   Yes  "SLU_54"
   LON1    1.35000000000000E+0
   LON2    1.35000000000000E+0
   LON4    1.50000000000000E+0
   LON6    1.50000000000000E+0
   LON7    9.00000000000000E-1
   LON8    1.16000000000000E+0
   LON11    9.00000000000000E-1

NonLinearIncrement       0   Yes  "SLU_55"
   LON1    1.35000000000000E+0
   LON2    1.35000000000000E+0
   LON3    1.50000000000000E+0
   LON6    1.50000000000000E+0
   LON9    9.00000000000000E-1
   LON10    1.16000000000000E+0
   LON12    9.00000000000000E-1

NonLinearIncrement       0   Yes  "SLU_56"
   LON1    1.35000000000000E+0
   LON2    1.35000000000000E+0
   LON4    1.50000000000000E+0
   LON6    1.50000000000000E+0
   LON9    9.00000000000000E-1
   LON10    1.16000000000000E+0
   LON12    9.00000000000000E-1

NonLinearIncrement       0   Yes  "SLU_57"
   LON1    1.35000000000000E+0
   LON2    1.35000000000000E+0
   LON3    1.50000000000000E+0
   LON6    1.05000000000000E+0
   LON7    1.50000000000000E+0

NonLinearIncrement       0   Yes  "SLU_58"
   LON1    1.35000000000000E+0
   LON2    1.35000000000000E+0
   LON4    1.50000000000000E+0
   LON6    1.05000000000000E+0
   LON7    1.50000000000000E+0
```

```
NonLinearIncrement       0   Yes  "SLU_59"
   LON1    1.35000000000000E+0
   LON2    1.35000000000000E+0
   LON3    1.50000000000000E+0
   LON6    1.05000000000000E+0
   LON9    1.50000000000000E+0

NonLinearIncrement       0   Yes  "SLU_60"
   LON1    1.35000000000000E+0
   LON2    1.35000000000000E+0
   LON4    1.50000000000000E+0
   LON6    1.05000000000000E+0
   LON9    1.50000000000000E+0

NonLinearIncrement       0   Yes  "SLU_61"
   LON1    1.35000000000000E+0
   LON2    1.35000000000000E+0
   LON3    1.50000000000000E+0
   LON7    1.50000000000000E+0
   LON8    1.16000000000000E+0

NonLinearIncrement       0   Yes  "SLU_62"
   LON1    1.35000000000000E+0
   LON2    1.35000000000000E+0
   LON4    1.50000000000000E+0
   LON7    1.50000000000000E+0
   LON8    1.16000000000000E+0

NonLinearIncrement       0   Yes  "SLU_63"
   LON1    1.35000000000000E+0
   LON2    1.35000000000000E+0
   LON3    1.50000000000000E+0
   LON9    1.50000000000000E+0
   LON8    1.16000000000000E+0

NonLinearIncrement       0   Yes  "SLU_64"
   LON1    1.35000000000000E+0
   LON2    1.35000000000000E+0
   LON4    1.50000000000000E+0
   LON9    1.50000000000000E+0
   LON8    1.16000000000000E+0

NonLinearIncrement       0   Yes  "SLU_65"
   LON1    1.35000000000000E+0
   LON2    1.35000000000000E+0
   LON3    1.50000000000000E+0
   LON7    1.50000000000000E+0
   LON10    1.16000000000000E+0

NonLinearIncrement       0   Yes  "SLU_66"
   LON1    1.35000000000000E+0
   LON2    1.35000000000000E+0
   LON4    1.50000000000000E+0
   LON7    1.50000000000000E+0
```

```
   LON10    1.16000000000000E+0

NonLinearIncrement       0   Yes  "SLU_67"
   LON1    1.35000000000000E+0
   LON2    1.35000000000000E+0
   LON3    1.50000000000000E+0
   LON9    1.50000000000000E+0
   LON10    1.16000000000000E+0

NonLinearIncrement       0   Yes  "SLU_68"
   LON1    1.35000000000000E+0
   LON2    1.35000000000000E+0
   LON4    1.50000000000000E+0
   LON9    1.50000000000000E+0
   LON10    1.16000000000000E+0

NonLinearIncrement       0   Yes  "SLU_69"
   LON1    1.35000000000000E+0
   LON2    1.35000000000000E+0
   LON3    1.50000000000000E+0
   LON7    1.50000000000000E+0
   LON11    9.00000000000000E-1

NonLinearIncrement       0   Yes  "SLU_70"
   LON1    1.35000000000000E+0
   LON2    1.35000000000000E+0
   LON4    1.50000000000000E+0
   LON7    1.50000000000000E+0
   LON11    9.00000000000000E-1

NonLinearIncrement       0   Yes  "SLU_71"
   LON1    1.35000000000000E+0
   LON2    1.35000000000000E+0
   LON3    1.50000000000000E+0
   LON9    1.50000000000000E+0
   LON11    9.00000000000000E-1

NonLinearIncrement       0   Yes  "SLU_72"
   LON1    1.35000000000000E+0
   LON2    1.35000000000000E+0
   LON4    1.50000000000000E+0
   LON9    1.50000000000000E+0
   LON11    9.00000000000000E-1

NonLinearIncrement       0   Yes  "SLU_73"
   LON1    1.35000000000000E+0
   LON2    1.35000000000000E+0
   LON3    1.50000000000000E+0
   LON7    1.50000000000000E+0
   LON12    9.00000000000000E-1

NonLinearIncrement       0   Yes  "SLU_74"
   LON1    1.35000000000000E+0
   LON2    1.35000000000000E+0
```

```
   LON4    1.50000000000000E+0
   LON7    1.50000000000000E+0
   LON12    9.00000000000000E-1

NonLinearIncrement       0   Yes  "SLU_75"
   LON1    1.35000000000000E+0
   LON2    1.35000000000000E+0
   LON3    1.50000000000000E+0
   LON9    1.50000000000000E+0
   LON12    9.00000000000000E-1

NonLinearIncrement       0   Yes  "SLU_76"
   LON1    1.35000000000000E+0
   LON2    1.35000000000000E+0
   LON4    1.50000000000000E+0
   LON9    1.50000000000000E+0
   LON12    9.00000000000000E-1

NonLinearIncrement       0   Yes  "SLU_77"
   LON1    1.35000000000000E+0
   LON2    1.35000000000000E+0
   LON3    1.50000000000000E+0
   LON6    1.05000000000000E+0
   LON7    1.50000000000000E+0
   LON8    1.16000000000000E+0

NonLinearIncrement       0   Yes  "SLU_78"
   LON1    1.35000000000000E+0
   LON2    1.35000000000000E+0
   LON4    1.50000000000000E+0
   LON6    1.05000000000000E+0
   LON7    1.50000000000000E+0
   LON8    1.16000000000000E+0

NonLinearIncrement       0   Yes  "SLU_79"
   LON1    1.35000000000000E+0
   LON2    1.35000000000000E+0
   LON3    1.50000000000000E+0
   LON6    1.05000000000000E+0
   LON9    1.50000000000000E+0
   LON8    1.16000000000000E+0

NonLinearIncrement       0   Yes  "SLU_80"
   LON1    1.35000000000000E+0
   LON2    1.35000000000000E+0
   LON4    1.50000000000000E+0
   LON6    1.05000000000000E+0
   LON9    1.50000000000000E+0
   LON8    1.16000000000000E+0

NonLinearIncrement       0   Yes  "SLU_81"
   LON1    1.35000000000000E+0
   LON2    1.35000000000000E+0
   LON3    1.50000000000000E+0
```

```
   LON6    1.05000000000000E+0
   LON7    1.50000000000000E+0
   LON10    1.16000000000000E+0

NonLinearIncrement       0   Yes  "SLU_82"
   LON1    1.35000000000000E+0
   LON2    1.35000000000000E+0
   LON4    1.50000000000000E+0
   LON6    1.05000000000000E+0
   LON7    1.50000000000000E+0
   LON10    1.16000000000000E+0

NonLinearIncrement       0   Yes  "SLU_83"
   LON1    1.35000000000000E+0
   LON2    1.35000000000000E+0
   LON3    1.50000000000000E+0
   LON6    1.05000000000000E+0
   LON9    1.50000000000000E+0
   LON10    1.16000000000000E+0

NonLinearIncrement       0   Yes  "SLU_84"
   LON1    1.35000000000000E+0
   LON2    1.35000000000000E+0
   LON4    1.50000000000000E+0
   LON6    1.05000000000000E+0
   LON9    1.50000000000000E+0
   LON10    1.16000000000000E+0

NonLinearIncrement       0   Yes  "SLU_85"
   LON1    1.35000000000000E+0
   LON2    1.35000000000000E+0
   LON3    1.50000000000000E+0
   LON6    1.05000000000000E+0
   LON7    1.50000000000000E+0
   LON11    9.00000000000000E-1

NonLinearIncrement       0   Yes  "SLU_86"
   LON1    1.35000000000000E+0
   LON2    1.35000000000000E+0
   LON4    1.50000000000000E+0
   LON6    1.05000000000000E+0
   LON7    1.50000000000000E+0
   LON11    9.00000000000000E-1

NonLinearIncrement       0   Yes  "SLU_87"
   LON1    1.35000000000000E+0
   LON2    1.35000000000000E+0
   LON3    1.50000000000000E+0
   LON6    1.05000000000000E+0
   LON9    1.50000000000000E+0
   LON11    9.00000000000000E-1

NonLinearIncrement       0   Yes  "SLU_88"
   LON1    1.35000000000000E+0
```

```
   LON2    1.35000000000000E+0
   LON4    1.50000000000000E+0
   LON6    1.05000000000000E+0
   LON9    1.50000000000000E+0
   LON11    9.00000000000000E-1

NonLinearIncrement       0   Yes  "SLU_89"
   LON1    1.35000000000000E+0
   LON2    1.35000000000000E+0
   LON3    1.50000000000000E+0
   LON6    1.05000000000000E+0
   LON7    1.50000000000000E+0
   LON12    9.00000000000000E-1

NonLinearIncrement       0   Yes  "SLU_90"
   LON1    1.35000000000000E+0
   LON2    1.35000000000000E+0
   LON4    1.50000000000000E+0
   LON6    1.05000000000000E+0
   LON7    1.50000000000000E+0
   LON12    9.00000000000000E-1

NonLinearIncrement       0   Yes  "SLU_91"
   LON1    1.35000000000000E+0
   LON2    1.35000000000000E+0
   LON3    1.50000000000000E+0
   LON6    1.05000000000000E+0
   LON9    1.50000000000000E+0
   LON12    9.00000000000000E-1

NonLinearIncrement       0   Yes  "SLU_92"
   LON1    1.35000000000000E+0
   LON2    1.35000000000000E+0
   LON4    1.50000000000000E+0
   LON6    1.05000000000000E+0
   LON9    1.50000000000000E+0
   LON12    9.00000000000000E-1

NonLinearIncrement       0   Yes  "SLU_93"
   LON1    1.35000000000000E+0
   LON2    1.35000000000000E+0
   LON3    1.50000000000000E+0
   LON7    1.50000000000000E+0
   LON8    1.16000000000000E+0
   LON11    9.00000000000000E-1

NonLinearIncrement       0   Yes  "SLU_94"
   LON1    1.35000000000000E+0
   LON2    1.35000000000000E+0
   LON4    1.50000000000000E+0
   LON7    1.50000000000000E+0
   LON8    1.16000000000000E+0
   LON11    9.00000000000000E-1
```

```
NonLinearIncrement       0   Yes  "SLU_95"
   LON1    1.35000000000000E+0
   LON2    1.35000000000000E+0
   LON3    1.50000000000000E+0
   LON9    1.50000000000000E+0
   LON8    1.16000000000000E+0
   LON11    9.00000000000000E-1

NonLinearIncrement       0   Yes  "SLU_96"
   LON1    1.35000000000000E+0
   LON2    1.35000000000000E+0
   LON4    1.50000000000000E+0
   LON9    1.50000000000000E+0
   LON8    1.16000000000000E+0
   LON11    9.00000000000000E-1

NonLinearIncrement       0   Yes  "SLU_97"
   LON1    1.35000000000000E+0
   LON2    1.35000000000000E+0
   LON3    1.50000000000000E+0
   LON7    1.50000000000000E+0
   LON8    1.16000000000000E+0
   LON12    9.00000000000000E-1

NonLinearIncrement       0   Yes  "SLU_98"
   LON1    1.35000000000000E+0
   LON2    1.35000000000000E+0
   LON4    1.50000000000000E+0
   LON7    1.50000000000000E+0
   LON8    1.16000000000000E+0
   LON12    9.00000000000000E-1

NonLinearIncrement       0   Yes  "SLU_99"
   LON1    1.35000000000000E+0
   LON2    1.35000000000000E+0
   LON3    1.50000000000000E+0
   LON9    1.50000000000000E+0
   LON8    1.16000000000000E+0
   LON12    9.00000000000000E-1

NonLinearIncrement       0   Yes  "SLU_100"
   LON1    1.35000000000000E+0
   LON2    1.35000000000000E+0
   LON4    1.50000000000000E+0
   LON9    1.50000000000000E+0
   LON8    1.16000000000000E+0
   LON12    9.00000000000000E-1

NonLinearIncrement       0   Yes  "SLU_101"
   LON1    1.35000000000000E+0
   LON2    1.35000000000000E+0
   LON3    1.50000000000000E+0
   LON7    1.50000000000000E+0
   LON10    1.16000000000000E+0
```

```
   LON11    9.00000000000000E-1

NonLinearIncrement       0   Yes  "SLU_102"
   LON1    1.35000000000000E+0
   LON2    1.35000000000000E+0
   LON4    1.50000000000000E+0
   LON7    1.50000000000000E+0
   LON10    1.16000000000000E+0
   LON11    9.00000000000000E-1

NonLinearIncrement       0   Yes  "SLU_103"
   LON1    1.35000000000000E+0
   LON2    1.35000000000000E+0
   LON3    1.50000000000000E+0
   LON9    1.50000000000000E+0
   LON10    1.16000000000000E+0
   LON11    9.00000000000000E-1

NonLinearIncrement       0   Yes  "SLU_104"
   LON1    1.35000000000000E+0
   LON2    1.35000000000000E+0
   LON4    1.50000000000000E+0
   LON9    1.50000000000000E+0
   LON10    1.16000000000000E+0
   LON11    9.00000000000000E-1

NonLinearIncrement       0   Yes  "SLU_105"
   LON1    1.35000000000000E+0
   LON2    1.35000000000000E+0
   LON3    1.50000000000000E+0
   LON7    1.50000000000000E+0
   LON10    1.16000000000000E+0
   LON12    9.00000000000000E-1

NonLinearIncrement       0   Yes  "SLU_106"
   LON1    1.35000000000000E+0
   LON2    1.35000000000000E+0
   LON4    1.50000000000000E+0
   LON7    1.50000000000000E+0
   LON10    1.16000000000000E+0
   LON12    9.00000000000000E-1

NonLinearIncrement       0   Yes  "SLU_107"
   LON1    1.35000000000000E+0
   LON2    1.35000000000000E+0
   LON3    1.50000000000000E+0
   LON9    1.50000000000000E+0
   LON10    1.16000000000000E+0
   LON12    9.00000000000000E-1

NonLinearIncrement       0   Yes  "SLU_108"
   LON1    1.35000000000000E+0
   LON2    1.35000000000000E+0
   LON4    1.50000000000000E+0
```

```
   LON9    1.50000000000000E+0
   LON10    1.16000000000000E+0
   LON12    9.00000000000000E-1

NonLinearIncrement       0   Yes  "SLU_109"
   LON1    1.35000000000000E+0
   LON2    1.35000000000000E+0
   LON3    1.50000000000000E+0
   LON6    1.05000000000000E+0
   LON7    1.50000000000000E+0
   LON8    1.16000000000000E+0
   LON11    9.00000000000000E-1

NonLinearIncrement       0   Yes  "SLU_110"
   LON1    1.35000000000000E+0
   LON2    1.35000000000000E+0
   LON4    1.50000000000000E+0
   LON6    1.05000000000000E+0
   LON7    1.50000000000000E+0
   LON8    1.16000000000000E+0
   LON11    9.00000000000000E-1

NonLinearIncrement       0   Yes  "SLU_111"
   LON1    1.35000000000000E+0
   LON2    1.35000000000000E+0
   LON3    1.50000000000000E+0
   LON6    1.05000000000000E+0
   LON9    1.50000000000000E+0
   LON8    1.16000000000000E+0
   LON11    9.00000000000000E-1

NonLinearIncrement       0   Yes  "SLU_112"
   LON1    1.35000000000000E+0
   LON2    1.35000000000000E+0
   LON4    1.50000000000000E+0
   LON6    1.05000000000000E+0
   LON9    1.50000000000000E+0
   LON8    1.16000000000000E+0
   LON11    9.00000000000000E-1

NonLinearIncrement       0   Yes  "SLU_113"
   LON1    1.35000000000000E+0
   LON2    1.35000000000000E+0
   LON3    1.50000000000000E+0
   LON6    1.05000000000000E+0
   LON7    1.50000000000000E+0
   LON8    1.16000000000000E+0
   LON12    9.00000000000000E-1

NonLinearIncrement       0   Yes  "SLU_114"
   LON1    1.35000000000000E+0
   LON2    1.35000000000000E+0
   LON4    1.50000000000000E+0
   LON6    1.05000000000000E+0
```

```
   LON7    1.50000000000000E+0
   LON8    1.16000000000000E+0
   LON12    9.00000000000000E-1

NonLinearIncrement       0   Yes  "SLU_115"
   LON1    1.35000000000000E+0
   LON2    1.35000000000000E+0
   LON3    1.50000000000000E+0
   LON6    1.05000000000000E+0
   LON9    1.50000000000000E+0
   LON8    1.16000000000000E+0
   LON12    9.00000000000000E-1

NonLinearIncrement       0   Yes  "SLU_116"
   LON1    1.35000000000000E+0
   LON2    1.35000000000000E+0
   LON4    1.50000000000000E+0
   LON6    1.05000000000000E+0
   LON9    1.50000000000000E+0
   LON8    1.16000000000000E+0
   LON12    9.00000000000000E-1

NonLinearIncrement       0   Yes  "SLU_117"
   LON1    1.35000000000000E+0
   LON2    1.35000000000000E+0
   LON3    1.50000000000000E+0
   LON6    1.05000000000000E+0
   LON7    1.50000000000000E+0
   LON10    1.16000000000000E+0
   LON11    9.00000000000000E-1

NonLinearIncrement       0   Yes  "SLU_118"
   LON1    1.35000000000000E+0
   LON2    1.35000000000000E+0
   LON4    1.50000000000000E+0
   LON6    1.05000000000000E+0
   LON7    1.50000000000000E+0
   LON10    1.16000000000000E+0
   LON11    9.00000000000000E-1

NonLinearIncrement       0   Yes  "SLU_119"
   LON1    1.35000000000000E+0
   LON2    1.35000000000000E+0
   LON3    1.50000000000000E+0
   LON6    1.05000000000000E+0
   LON9    1.50000000000000E+0
   LON10    1.16000000000000E+0
   LON11    9.00000000000000E-1

NonLinearIncrement       0   Yes  "SLU_120"
   LON1    1.35000000000000E+0
   LON2    1.35000000000000E+0
   LON4    1.50000000000000E+0
   LON6    1.05000000000000E+0
```

```
   LON9    1.50000000000000E+0
   LON10    1.16000000000000E+0
   LON11    9.00000000000000E-1

NonLinearIncrement       0   Yes  "SLU_121"
   LON1    1.35000000000000E+0
   LON2    1.35000000000000E+0
   LON3    1.50000000000000E+0
   LON6    1.05000000000000E+0
   LON7    1.50000000000000E+0
   LON10    1.16000000000000E+0
   LON12    9.00000000000000E-1

NonLinearIncrement       0   Yes  "SLU_122"
   LON1    1.35000000000000E+0
   LON2    1.35000000000000E+0
   LON4    1.50000000000000E+0
   LON6    1.05000000000000E+0
   LON7    1.50000000000000E+0
   LON10    1.16000000000000E+0
   LON12    9.00000000000000E-1

NonLinearIncrement       0   Yes  "SLU_123"
   LON1    1.35000000000000E+0
   LON2    1.35000000000000E+0
   LON3    1.50000000000000E+0
   LON6    1.05000000000000E+0
   LON9    1.50000000000000E+0
   LON10    1.16000000000000E+0
   LON12    9.00000000000000E-1

NonLinearIncrement       0   Yes  "SLU_124"
   LON1    1.35000000000000E+0
   LON2    1.35000000000000E+0
   LON4    1.50000000000000E+0
   LON6    1.05000000000000E+0
   LON9    1.50000000000000E+0
   LON10    1.16000000000000E+0
   LON12    9.00000000000000E-1

NonLinearIncrement       0   Yes  "SLU_125"
   LON1    1.35000000000000E+0
   LON2    1.35000000000000E+0
   LON3    1.50000000000000E+0
   LON6    1.05000000000000E+0
   LON8    1.45000000000000E+0

NonLinearIncrement       0   Yes  "SLU_126"
   LON1    1.35000000000000E+0
   LON2    1.35000000000000E+0
   LON4    1.50000000000000E+0
   LON6    1.05000000000000E+0
   LON8    1.45000000000000E+0
```

```
NonLinearIncrement       0   Yes  "SLU_127"
   LON1    1.35000000000000E+0
   LON2    1.35000000000000E+0
   LON3    1.50000000000000E+0
   LON6    1.05000000000000E+0
   LON10    1.45000000000000E+0

NonLinearIncrement       0   Yes  "SLU_128"
   LON1    1.35000000000000E+0
   LON2    1.35000000000000E+0
   LON4    1.50000000000000E+0
   LON6    1.05000000000000E+0
   LON10    1.45000000000000E+0

NonLinearIncrement       0   Yes  "SLU_129"
   LON1    1.35000000000000E+0
   LON2    1.35000000000000E+0
   LON3    1.50000000000000E+0
   LON7    9.00000000000000E-1
   LON8    1.45000000000000E+0

NonLinearIncrement       0   Yes  "SLU_130"
   LON1    1.35000000000000E+0
   LON2    1.35000000000000E+0
   LON4    1.50000000000000E+0
   LON7    9.00000000000000E-1
   LON8    1.45000000000000E+0

NonLinearIncrement       0   Yes  "SLU_131"
   LON1    1.35000000000000E+0
   LON2    1.35000000000000E+0
   LON3    1.50000000000000E+0
   LON9    9.00000000000000E-1
   LON8    1.45000000000000E+0

NonLinearIncrement       0   Yes  "SLU_132"
   LON1    1.35000000000000E+0
   LON2    1.35000000000000E+0
   LON4    1.50000000000000E+0
   LON9    9.00000000000000E-1
   LON8    1.45000000000000E+0

NonLinearIncrement       0   Yes  "SLU_133"
   LON1    1.35000000000000E+0
   LON2    1.35000000000000E+0
   LON3    1.50000000000000E+0
   LON7    9.00000000000000E-1
   LON10    1.45000000000000E+0

NonLinearIncrement       0   Yes  "SLU_134"
   LON1    1.35000000000000E+0
   LON2    1.35000000000000E+0
   LON4    1.50000000000000E+0
   LON7    9.00000000000000E-1
```

```
   LON10    1.45000000000000E+0

NonLinearIncrement       0   Yes  "SLU_135"
   LON1    1.35000000000000E+0
   LON2    1.35000000000000E+0
   LON3    1.50000000000000E+0
   LON9    9.00000000000000E-1
   LON10    1.45000000000000E+0

NonLinearIncrement       0   Yes  "SLU_136"
   LON1    1.35000000000000E+0
   LON2    1.35000000000000E+0
   LON4    1.50000000000000E+0
   LON9    9.00000000000000E-1
   LON10    1.45000000000000E+0

NonLinearIncrement       0   Yes  "SLU_137"
   LON1    1.35000000000000E+0
   LON2    1.35000000000000E+0
   LON3    1.50000000000000E+0
   LON8    1.45000000000000E+0
   LON11    9.00000000000000E-1

NonLinearIncrement       0   Yes  "SLU_138"
   LON1    1.35000000000000E+0
   LON2    1.35000000000000E+0
   LON4    1.50000000000000E+0
   LON8    1.45000000000000E+0
   LON11    9.00000000000000E-1

NonLinearIncrement       0   Yes  "SLU_139"
   LON1    1.35000000000000E+0
   LON2    1.35000000000000E+0
   LON3    1.50000000000000E+0
   LON8    1.45000000000000E+0
   LON11    9.00000000000000E-1

NonLinearIncrement       0   Yes  "SLU_140"
   LON1    1.35000000000000E+0
   LON2    1.35000000000000E+0
   LON4    1.50000000000000E+0
   LON8    1.45000000000000E+0
   LON11    9.00000000000000E-1

NonLinearIncrement       0   Yes  "SLU_141"
   LON1    1.35000000000000E+0
   LON2    1.35000000000000E+0
   LON3    1.50000000000000E+0
   LON10    1.45000000000000E+0
   LON12    9.00000000000000E-1

NonLinearIncrement       0   Yes  "SLU_142"
   LON1    1.35000000000000E+0
   LON2    1.35000000000000E+0
```

```
   LON4    1.50000000000000E+0
   LON10    1.45000000000000E+0
   LON12    9.00000000000000E-1

NonLinearIncrement       0   Yes  "SLU_143"
   LON1    1.35000000000000E+0
   LON2    1.35000000000000E+0
   LON3    1.50000000000000E+0
   LON10    1.45000000000000E+0
   LON12    9.00000000000000E-1

NonLinearIncrement       0   Yes  "SLU_144"
   LON1    1.35000000000000E+0
   LON2    1.35000000000000E+0
   LON4    1.50000000000000E+0
   LON10    1.45000000000000E+0
   LON12    9.00000000000000E-1

NonLinearIncrement       0   Yes  "SLU_145"
   LON1    1.35000000000000E+0
   LON2    1.35000000000000E+0
   LON3    1.50000000000000E+0
   LON6    1.05000000000000E+0
   LON7    9.00000000000000E-1
   LON8    1.45000000000000E+0

NonLinearIncrement       0   Yes  "SLU_146"
   LON1    1.35000000000000E+0
   LON2    1.35000000000000E+0
   LON4    1.50000000000000E+0
   LON6    1.05000000000000E+0
   LON7    9.00000000000000E-1
   LON8    1.45000000000000E+0

NonLinearIncrement       0   Yes  "SLU_147"
   LON1    1.35000000000000E+0
   LON2    1.35000000000000E+0
   LON3    1.50000000000000E+0
   LON6    1.05000000000000E+0
   LON9    9.00000000000000E-1
   LON8    1.45000000000000E+0

NonLinearIncrement       0   Yes  "SLU_148"
   LON1    1.35000000000000E+0
   LON2    1.35000000000000E+0
   LON4    1.50000000000000E+0
   LON6    1.05000000000000E+0
   LON9    9.00000000000000E-1
   LON8    1.45000000000000E+0

NonLinearIncrement       0   Yes  "SLU_149"
   LON1    1.35000000000000E+0
   LON2    1.35000000000000E+0
   LON3    1.50000000000000E+0
```

```
   LON6    1.05000000000000E+0
   LON7    9.00000000000000E-1
   LON10    1.45000000000000E+0

NonLinearIncrement       0   Yes  "SLU_150"
   LON1    1.35000000000000E+0
   LON2    1.35000000000000E+0
   LON4    1.50000000000000E+0
   LON6    1.05000000000000E+0
   LON7    9.00000000000000E-1
   LON10    1.45000000000000E+0

NonLinearIncrement       0   Yes  "SLU_151"
   LON1    1.35000000000000E+0
   LON2    1.35000000000000E+0
   LON3    1.50000000000000E+0
   LON6    1.05000000000000E+0
   LON9    9.00000000000000E-1
   LON10    1.45000000000000E+0

NonLinearIncrement       0   Yes  "SLU_152"
   LON1    1.35000000000000E+0
   LON2    1.35000000000000E+0
   LON4    1.50000000000000E+0
   LON6    1.05000000000000E+0
   LON9    9.00000000000000E-1
   LON10    1.45000000000000E+0

NonLinearIncrement       0   Yes  "SLU_153"
   LON1    1.35000000000000E+0
   LON2    1.35000000000000E+0
   LON3    1.50000000000000E+0
   LON6    1.05000000000000E+0
   LON8    1.45000000000000E+0
   LON11    9.00000000000000E-1

NonLinearIncrement       0   Yes  "SLU_154"
   LON1    1.35000000000000E+0
   LON2    1.35000000000000E+0
   LON4    1.50000000000000E+0
   LON6    1.05000000000000E+0
   LON8    1.45000000000000E+0
   LON11    9.00000000000000E-1

NonLinearIncrement       0   Yes  "SLU_155"
   LON1    1.35000000000000E+0
   LON2    1.35000000000000E+0
   LON3    1.50000000000000E+0
   LON6    1.05000000000000E+0
   LON8    1.45000000000000E+0
   LON11    9.00000000000000E-1

NonLinearIncrement       0   Yes  "SLU_156"
   LON1    1.35000000000000E+0
```

```
   LON2    1.35000000000000E+0
   LON4    1.50000000000000E+0
   LON6    1.05000000000000E+0
   LON8    1.45000000000000E+0
   LON11    9.00000000000000E-1

NonLinearIncrement       0   Yes  "SLU_157"
   LON1    1.35000000000000E+0
   LON2    1.35000000000000E+0
   LON3    1.50000000000000E+0
   LON6    1.05000000000000E+0
   LON10    1.45000000000000E+0
   LON12    9.00000000000000E-1

NonLinearIncrement       0   Yes  "SLU_158"
   LON1    1.35000000000000E+0
   LON2    1.35000000000000E+0
   LON4    1.50000000000000E+0
   LON6    1.05000000000000E+0
   LON10    1.45000000000000E+0
   LON12    9.00000000000000E-1

NonLinearIncrement       0   Yes  "SLU_159"
   LON1    1.35000000000000E+0
   LON2    1.35000000000000E+0
   LON3    1.50000000000000E+0
   LON6    1.05000000000000E+0
   LON10    1.45000000000000E+0
   LON12    9.00000000000000E-1

NonLinearIncrement       0   Yes  "SLU_160"
   LON1    1.35000000000000E+0
   LON2    1.35000000000000E+0
   LON4    1.50000000000000E+0
   LON6    1.05000000000000E+0
   LON10    1.45000000000000E+0
   LON12    9.00000000000000E-1

NonLinearIncrement       0   Yes  "SLU_161"
   LON1    1.35000000000000E+0
   LON2    1.35000000000000E+0
   LON3    1.50000000000000E+0
   LON7    9.00000000000000E-1
   LON8    1.45000000000000E+0
   LON11    9.00000000000000E-1

NonLinearIncrement       0   Yes  "SLU_162"
   LON1    1.35000000000000E+0
   LON2    1.35000000000000E+0
   LON4    1.50000000000000E+0
   LON7    9.00000000000000E-1
   LON8    1.45000000000000E+0
   LON11    9.00000000000000E-1
```

```
NonLinearIncrement       0   Yes  "SLU_163"
   LON1    1.35000000000000E+0
   LON2    1.35000000000000E+0
   LON3    1.50000000000000E+0
   LON9    9.00000000000000E-1
   LON8    1.45000000000000E+0
   LON11    9.00000000000000E-1

NonLinearIncrement       0   Yes  "SLU_164"
   LON1    1.35000000000000E+0
   LON2    1.35000000000000E+0
   LON4    1.50000000000000E+0
   LON9    9.00000000000000E-1
   LON8    1.45000000000000E+0
   LON11    9.00000000000000E-1

NonLinearIncrement       0   Yes  "SLU_165"
   LON1    1.35000000000000E+0
   LON2    1.35000000000000E+0
   LON3    1.50000000000000E+0
   LON7    9.00000000000000E-1
   LON8    1.45000000000000E+0
   LON12    9.00000000000000E-1

NonLinearIncrement       0   Yes  "SLU_166"
   LON1    1.35000000000000E+0
   LON2    1.35000000000000E+0
   LON4    1.50000000000000E+0
   LON7    9.00000000000000E-1
   LON8    1.45000000000000E+0
   LON12    9.00000000000000E-1

NonLinearIncrement       0   Yes  "SLU_167"
   LON1    1.35000000000000E+0
   LON2    1.35000000000000E+0
   LON3    1.50000000000000E+0
   LON9    9.00000000000000E-1
   LON8    1.45000000000000E+0
   LON12    9.00000000000000E-1

NonLinearIncrement       0   Yes  "SLU_168"
   LON1    1.35000000000000E+0
   LON2    1.35000000000000E+0
   LON4    1.50000000000000E+0
   LON9    9.00000000000000E-1
   LON8    1.45000000000000E+0
   LON12    9.00000000000000E-1

NonLinearIncrement       0   Yes  "SLU_169"
   LON1    1.35000000000000E+0
   LON2    1.35000000000000E+0
   LON3    1.50000000000000E+0
   LON7    9.00000000000000E-1
   LON10    1.45000000000000E+0
```

```
   LON11    9.00000000000000E-1

NonLinearIncrement       0   Yes  "SLU_170"
   LON1    1.35000000000000E+0
   LON2    1.35000000000000E+0
   LON4    1.50000000000000E+0
   LON7    9.00000000000000E-1
   LON10    1.45000000000000E+0
   LON11    9.00000000000000E-1

NonLinearIncrement       0   Yes  "SLU_171"
   LON1    1.35000000000000E+0
   LON2    1.35000000000000E+0
   LON3    1.50000000000000E+0
   LON9    9.00000000000000E-1
   LON10    1.45000000000000E+0
   LON11    9.00000000000000E-1

NonLinearIncrement       0   Yes  "SLU_172"
   LON1    1.35000000000000E+0
   LON2    1.35000000000000E+0
   LON4    1.50000000000000E+0
   LON9    9.00000000000000E-1
   LON10    1.45000000000000E+0
   LON11    9.00000000000000E-1

NonLinearIncrement       0   Yes  "SLU_173"
   LON1    1.35000000000000E+0
   LON2    1.35000000000000E+0
   LON3    1.50000000000000E+0
   LON7    9.00000000000000E-1
   LON10    1.45000000000000E+0
   LON12    9.00000000000000E-1

NonLinearIncrement       0   Yes  "SLU_174"
   LON1    1.35000000000000E+0
   LON2    1.35000000000000E+0
   LON4    1.50000000000000E+0
   LON7    9.00000000000000E-1
   LON10    1.45000000000000E+0
   LON12    9.00000000000000E-1

NonLinearIncrement       0   Yes  "SLU_175"
   LON1    1.35000000000000E+0
   LON2    1.35000000000000E+0
   LON3    1.50000000000000E+0
   LON9    9.00000000000000E-1
   LON10    1.45000000000000E+0
   LON12    9.00000000000000E-1

NonLinearIncrement       0   Yes  "SLU_176"
   LON1    1.35000000000000E+0
   LON2    1.35000000000000E+0
   LON4    1.50000000000000E+0
```

```
   LON9    9.00000000000000E-1
   LON10    1.45000000000000E+0
   LON12    9.00000000000000E-1

NonLinearIncrement       0   Yes  "SLU_177"
   LON1    1.35000000000000E+0
   LON2    1.35000000000000E+0
   LON3    1.50000000000000E+0
   LON6    1.05000000000000E+0
   LON7    9.00000000000000E-1
   LON8    1.45000000000000E+0
   LON11    9.00000000000000E-1

NonLinearIncrement       0   Yes  "SLU_178"
   LON1    1.35000000000000E+0
   LON2    1.35000000000000E+0
   LON4    1.50000000000000E+0
   LON6    1.05000000000000E+0
   LON7    9.00000000000000E-1
   LON8    1.45000000000000E+0
   LON11    9.00000000000000E-1

NonLinearIncrement       0   Yes  "SLU_179"
   LON1    1.35000000000000E+0
   LON2    1.35000000000000E+0
   LON3    1.50000000000000E+0
   LON6    1.05000000000000E+0
   LON9    9.00000000000000E-1
   LON8    1.45000000000000E+0
   LON11    9.00000000000000E-1

NonLinearIncrement       0   Yes  "SLU_180"
   LON1    1.35000000000000E+0
   LON2    1.35000000000000E+0
   LON4    1.50000000000000E+0
   LON6    1.05000000000000E+0
   LON9    9.00000000000000E-1
   LON8    1.45000000000000E+0
   LON11    9.00000000000000E-1

NonLinearIncrement       0   Yes  "SLU_181"
   LON1    1.35000000000000E+0
   LON2    1.35000000000000E+0
   LON3    1.50000000000000E+0
   LON6    1.05000000000000E+0
   LON7    9.00000000000000E-1
   LON8    1.45000000000000E+0
   LON12    9.00000000000000E-1

NonLinearIncrement       0   Yes  "SLU_182"
   LON1    1.35000000000000E+0
   LON2    1.35000000000000E+0
   LON4    1.50000000000000E+0
   LON6    1.05000000000000E+0
```

```
   LON7    9.00000000000000E-1
   LON8    1.45000000000000E+0
   LON12    9.00000000000000E-1

NonLinearIncrement       0   Yes  "SLU_183"
   LON1    1.35000000000000E+0
   LON2    1.35000000000000E+0
   LON3    1.50000000000000E+0
   LON6    1.05000000000000E+0
   LON9    9.00000000000000E-1
   LON8    1.45000000000000E+0
   LON12    9.00000000000000E-1

NonLinearIncrement       0   Yes  "SLU_184"
   LON1    1.35000000000000E+0
   LON2    1.35000000000000E+0
   LON4    1.50000000000000E+0
   LON6    1.05000000000000E+0
   LON9    9.00000000000000E-1
   LON8    1.45000000000000E+0
   LON12    9.00000000000000E-1

NonLinearIncrement       0   Yes  "SLU_185"
   LON1    1.35000000000000E+0
   LON2    1.35000000000000E+0
   LON3    1.50000000000000E+0
   LON6    1.05000000000000E+0
   LON7    9.00000000000000E-1
   LON10    1.45000000000000E+0
   LON11    9.00000000000000E-1

NonLinearIncrement       0   Yes  "SLU_186"
   LON1    1.35000000000000E+0
   LON2    1.35000000000000E+0
   LON4    1.50000000000000E+0
   LON6    1.05000000000000E+0
   LON7    9.00000000000000E-1
   LON10    1.45000000000000E+0
   LON11    9.00000000000000E-1

NonLinearIncrement       0   Yes  "SLU_187"
   LON1    1.35000000000000E+0
   LON2    1.35000000000000E+0
   LON3    1.50000000000000E+0
   LON6    1.05000000000000E+0
   LON9    9.00000000000000E-1
   LON10    1.45000000000000E+0
   LON11    9.00000000000000E-1

NonLinearIncrement       0   Yes  "SLU_188"
   LON1    1.35000000000000E+0
   LON2    1.35000000000000E+0
   LON4    1.50000000000000E+0
   LON6    1.05000000000000E+0
```

```
   LON9    9.00000000000000E-1
   LON10    1.45000000000000E+0
   LON11    9.00000000000000E-1

NonLinearIncrement       0   Yes  "SLU_189"
   LON1    1.35000000000000E+0
   LON2    1.35000000000000E+0
   LON3    1.50000000000000E+0
   LON6    1.05000000000000E+0
   LON7    9.00000000000000E-1
   LON10    1.45000000000000E+0
   LON12    9.00000000000000E-1

NonLinearIncrement       0   Yes  "SLU_190"
   LON1    1.35000000000000E+0
   LON2    1.35000000000000E+0
   LON4    1.50000000000000E+0
   LON6    1.05000000000000E+0
   LON7    9.00000000000000E-1
   LON10    1.45000000000000E+0
   LON12    9.00000000000000E-1

NonLinearIncrement       0   Yes  "SLU_191"
   LON1    1.35000000000000E+0
   LON2    1.35000000000000E+0
   LON3    1.50000000000000E+0
   LON6    1.05000000000000E+0
   LON9    9.00000000000000E-1
   LON10    1.45000000000000E+0
   LON12    9.00000000000000E-1

NonLinearIncrement       0   Yes  "SLU_192"
   LON1    1.35000000000000E+0
   LON2    1.35000000000000E+0
   LON4    1.50000000000000E+0
   LON6    1.05000000000000E+0
   LON9    9.00000000000000E-1
   LON10    1.45000000000000E+0
   LON12    9.00000000000000E-1

NonLinearIncrement       0   Yes  "SLU_193"
   LON1    1.35000000000000E+0
   LON2    1.35000000000000E+0
   LON3    1.50000000000000E+0
   LON6    1.05000000000000E+0
   LON11    1.50000000000000E+0

NonLinearIncrement       0   Yes  "SLU_194"
   LON1    1.35000000000000E+0
   LON2    1.35000000000000E+0
   LON4    1.50000000000000E+0
   LON6    1.05000000000000E+0
   LON11    1.50000000000000E+0
```

```
NonLinearIncrement       0   Yes  "SLU_195"
   LON1    1.35000000000000E+0
   LON2    1.35000000000000E+0
   LON3    1.50000000000000E+0
   LON6    1.05000000000000E+0
   LON12    1.50000000000000E+0

NonLinearIncrement       0   Yes  "SLU_196"
   LON1    1.35000000000000E+0
   LON2    1.35000000000000E+0
   LON4    1.50000000000000E+0
   LON6    1.05000000000000E+0
   LON12    1.50000000000000E+0

NonLinearIncrement       0   Yes  "SLU_197"
   LON1    1.35000000000000E+0
   LON2    1.35000000000000E+0
   LON3    1.50000000000000E+0
   LON7    9.00000000000000E-1
   LON11    1.50000000000000E+0

NonLinearIncrement       0   Yes  "SLU_198"
   LON1    1.35000000000000E+0
   LON2    1.35000000000000E+0
   LON4    1.50000000000000E+0
   LON7    9.00000000000000E-1
   LON11    1.50000000000000E+0

NonLinearIncrement       0   Yes  "SLU_199"
   LON1    1.35000000000000E+0
   LON2    1.35000000000000E+0
   LON3    1.50000000000000E+0
   LON9    9.00000000000000E-1
   LON11    1.50000000000000E+0

NonLinearIncrement       0   Yes  "SLU_200"
   LON1    1.35000000000000E+0
   LON2    1.35000000000000E+0
   LON4    1.50000000000000E+0
   LON9    9.00000000000000E-1
   LON11    1.50000000000000E+0

NonLinearIncrement       0   Yes  "SLU_201"
   LON1    1.35000000000000E+0
   LON2    1.35000000000000E+0
   LON3    1.50000000000000E+0
   LON7    9.00000000000000E-1
   LON12    1.50000000000000E+0

NonLinearIncrement       0   Yes  "SLU_202"
   LON1    1.35000000000000E+0
   LON2    1.35000000000000E+0
   LON4    1.50000000000000E+0
   LON7    9.00000000000000E-1
```

```
   LON12    1.50000000000000E+0

NonLinearIncrement       0   Yes  "SLU_203"
   LON1    1.35000000000000E+0
   LON2    1.35000000000000E+0
   LON3    1.50000000000000E+0
   LON9    9.00000000000000E-1
   LON12    1.50000000000000E+0

NonLinearIncrement       0   Yes  "SLU_204"
   LON1    1.35000000000000E+0
   LON2    1.35000000000000E+0
   LON4    1.50000000000000E+0
   LON9    9.00000000000000E-1
   LON12    1.50000000000000E+0

NonLinearIncrement       0   Yes  "SLU_205"
   LON1    1.35000000000000E+0
   LON2    1.35000000000000E+0
   LON3    1.50000000000000E+0
   LON8    1.16000000000000E+0
   LON11    1.50000000000000E+0

NonLinearIncrement       0   Yes  "SLU_206"
   LON1    1.35000000000000E+0
   LON2    1.35000000000000E+0
   LON4    1.50000000000000E+0
   LON8    1.16000000000000E+0
   LON11    1.50000000000000E+0

NonLinearIncrement       0   Yes  "SLU_207"
   LON1    1.35000000000000E+0
   LON2    1.35000000000000E+0
   LON3    1.50000000000000E+0
   LON8    1.16000000000000E+0
   LON11    1.50000000000000E+0

NonLinearIncrement       0   Yes  "SLU_208"
   LON1    1.35000000000000E+0
   LON2    1.35000000000000E+0
   LON4    1.50000000000000E+0
   LON8    1.16000000000000E+0
   LON11    1.50000000000000E+0

NonLinearIncrement       0   Yes  "SLU_209"
   LON1    1.35000000000000E+0
   LON2    1.35000000000000E+0
   LON3    1.50000000000000E+0
   LON10    1.16000000000000E+0
   LON12    1.50000000000000E+0

NonLinearIncrement       0   Yes  "SLU_210"
   LON1    1.35000000000000E+0
   LON2    1.35000000000000E+0
```

```
   LON4    1.50000000000000E+0
   LON10    1.16000000000000E+0
   LON12    1.50000000000000E+0

NonLinearIncrement       0   Yes  "SLU_211"
   LON1    1.35000000000000E+0
   LON2    1.35000000000000E+0
   LON3    1.50000000000000E+0
   LON10    1.16000000000000E+0
   LON12    1.50000000000000E+0

NonLinearIncrement       0   Yes  "SLU_212"
   LON1    1.35000000000000E+0
   LON2    1.35000000000000E+0
   LON4    1.50000000000000E+0
   LON10    1.16000000000000E+0
   LON12    1.50000000000000E+0

NonLinearIncrement       0   Yes  "SLU_213"
   LON1    1.35000000000000E+0
   LON2    1.35000000000000E+0
   LON3    1.50000000000000E+0
   LON6    1.05000000000000E+0
   LON7    9.00000000000000E-1
   LON11    1.50000000000000E+0

NonLinearIncrement       0   Yes  "SLU_214"
   LON1    1.35000000000000E+0
   LON2    1.35000000000000E+0
   LON4    1.50000000000000E+0
   LON6    1.05000000000000E+0
   LON7    9.00000000000000E-1
   LON11    1.50000000000000E+0

NonLinearIncrement       0   Yes  "SLU_215"
   LON1    1.35000000000000E+0
   LON2    1.35000000000000E+0
   LON3    1.50000000000000E+0
   LON6    1.05000000000000E+0
   LON9    9.00000000000000E-1
   LON11    1.50000000000000E+0

NonLinearIncrement       0   Yes  "SLU_216"
   LON1    1.35000000000000E+0
   LON2    1.35000000000000E+0
   LON4    1.50000000000000E+0
   LON6    1.05000000000000E+0
   LON9    9.00000000000000E-1
   LON11    1.50000000000000E+0

NonLinearIncrement       0   Yes  "SLU_217"
   LON1    1.35000000000000E+0
   LON2    1.35000000000000E+0
   LON3    1.50000000000000E+0
```

```
   LON6    1.05000000000000E+0
   LON7    9.00000000000000E-1
   LON12    1.50000000000000E+0

NonLinearIncrement       0   Yes  "SLU_218"
   LON1    1.35000000000000E+0
   LON2    1.35000000000000E+0
   LON4    1.50000000000000E+0
   LON6    1.05000000000000E+0
   LON7    9.00000000000000E-1
   LON12    1.50000000000000E+0

NonLinearIncrement       0   Yes  "SLU_219"
   LON1    1.35000000000000E+0
   LON2    1.35000000000000E+0
   LON3    1.50000000000000E+0
   LON6    1.05000000000000E+0
   LON9    9.00000000000000E-1
   LON12    1.50000000000000E+0

NonLinearIncrement       0   Yes  "SLU_220"
   LON1    1.35000000000000E+0
   LON2    1.35000000000000E+0
   LON4    1.50000000000000E+0
   LON6    1.05000000000000E+0
   LON9    9.00000000000000E-1
   LON12    1.50000000000000E+0

NonLinearIncrement       0   Yes  "SLU_221"
   LON1    1.35000000000000E+0
   LON2    1.35000000000000E+0
   LON3    1.50000000000000E+0
   LON6    1.05000000000000E+0
   LON8    1.16000000000000E+0
   LON11    1.50000000000000E+0

NonLinearIncrement       0   Yes  "SLU_222"
   LON1    1.35000000000000E+0
   LON2    1.35000000000000E+0
   LON4    1.50000000000000E+0
   LON6    1.05000000000000E+0
   LON8    1.16000000000000E+0
   LON11    1.50000000000000E+0

NonLinearIncrement       0   Yes  "SLU_223"
   LON1    1.35000000000000E+0
   LON2    1.35000000000000E+0
   LON3    1.50000000000000E+0
   LON6    1.05000000000000E+0
   LON8    1.16000000000000E+0
   LON11    1.50000000000000E+0

NonLinearIncrement       0   Yes  "SLU_224"
   LON1    1.35000000000000E+0
```

```
   LON2    1.35000000000000E+0
   LON4    1.50000000000000E+0
   LON6    1.05000000000000E+0
   LON8    1.16000000000000E+0
   LON11    1.50000000000000E+0

NonLinearIncrement       0   Yes  "SLU_225"
   LON1    1.35000000000000E+0
   LON2    1.35000000000000E+0
   LON3    1.50000000000000E+0
   LON6    1.05000000000000E+0
   LON10    1.16000000000000E+0
   LON12    1.50000000000000E+0

NonLinearIncrement       0   Yes  "SLU_226"
   LON1    1.35000000000000E+0
   LON2    1.35000000000000E+0
   LON4    1.50000000000000E+0
   LON6    1.05000000000000E+0
   LON10    1.16000000000000E+0
   LON12    1.50000000000000E+0

NonLinearIncrement       0   Yes  "SLU_227"
   LON1    1.35000000000000E+0
   LON2    1.35000000000000E+0
   LON3    1.50000000000000E+0
   LON6    1.05000000000000E+0
   LON10    1.16000000000000E+0
   LON12    1.50000000000000E+0

NonLinearIncrement       0   Yes  "SLU_228"
   LON1    1.35000000000000E+0
   LON2    1.35000000000000E+0
   LON4    1.50000000000000E+0
   LON6    1.05000000000000E+0
   LON10    1.16000000000000E+0
   LON12    1.50000000000000E+0

NonLinearIncrement       0   Yes  "SLU_229"
   LON1    1.35000000000000E+0
   LON2    1.35000000000000E+0
   LON3    1.50000000000000E+0
   LON7    9.00000000000000E-1
   LON8    1.16000000000000E+0
   LON11    1.50000000000000E+0

NonLinearIncrement       0   Yes  "SLU_230"
   LON1    1.35000000000000E+0
   LON2    1.35000000000000E+0
   LON4    1.50000000000000E+0
   LON7    9.00000000000000E-1
   LON8    1.16000000000000E+0
   LON11    1.50000000000000E+0
```

```
NonLinearIncrement       0   Yes  "SLU_231"
   LON1    1.35000000000000E+0
   LON2    1.35000000000000E+0
   LON3    1.50000000000000E+0
   LON9    9.00000000000000E-1
   LON8    1.16000000000000E+0
   LON11    1.50000000000000E+0

NonLinearIncrement       0   Yes  "SLU_232"
   LON1    1.35000000000000E+0
   LON2    1.35000000000000E+0
   LON4    1.50000000000000E+0
   LON9    9.00000000000000E-1
   LON8    1.16000000000000E+0
   LON11    1.50000000000000E+0

NonLinearIncrement       0   Yes  "SLU_233"
   LON1    1.35000000000000E+0
   LON2    1.35000000000000E+0
   LON3    1.50000000000000E+0
   LON7    9.00000000000000E-1
   LON8    1.16000000000000E+0
   LON12    1.50000000000000E+0

NonLinearIncrement       0   Yes  "SLU_234"
   LON1    1.35000000000000E+0
   LON2    1.35000000000000E+0
   LON4    1.50000000000000E+0
   LON7    9.00000000000000E-1
   LON8    1.16000000000000E+0
   LON12    1.50000000000000E+0

NonLinearIncrement       0   Yes  "SLU_235"
   LON1    1.35000000000000E+0
   LON2    1.35000000000000E+0
   LON3    1.50000000000000E+0
   LON9    9.00000000000000E-1
   LON8    1.16000000000000E+0
   LON12    1.50000000000000E+0

NonLinearIncrement       0   Yes  "SLU_236"
   LON1    1.35000000000000E+0
   LON2    1.35000000000000E+0
   LON4    1.50000000000000E+0
   LON9    9.00000000000000E-1
   LON8    1.16000000000000E+0
   LON12    1.50000000000000E+0

NonLinearIncrement       0   Yes  "SLU_237"
   LON1    1.35000000000000E+0
   LON2    1.35000000000000E+0
   LON3    1.50000000000000E+0
   LON7    9.00000000000000E-1
   LON10    1.16000000000000E+0
```

```
   LON11    1.50000000000000E+0

NonLinearIncrement       0   Yes  "SLU_238"
   LON1    1.35000000000000E+0
   LON2    1.35000000000000E+0
   LON4    1.50000000000000E+0
   LON7    9.00000000000000E-1
   LON10    1.16000000000000E+0
   LON11    1.50000000000000E+0

NonLinearIncrement       0   Yes  "SLU_239"
   LON1    1.35000000000000E+0
   LON2    1.35000000000000E+0
   LON3    1.50000000000000E+0
   LON9    9.00000000000000E-1
   LON10    1.16000000000000E+0
   LON11    1.50000000000000E+0

NonLinearIncrement       0   Yes  "SLU_240"
   LON1    1.35000000000000E+0
   LON2    1.35000000000000E+0
   LON4    1.50000000000000E+0
   LON9    9.00000000000000E-1
   LON10    1.16000000000000E+0
   LON11    1.50000000000000E+0

NonLinearIncrement       0   Yes  "SLU_241"
   LON1    1.35000000000000E+0
   LON2    1.35000000000000E+0
   LON3    1.50000000000000E+0
   LON7    9.00000000000000E-1
   LON10    1.16000000000000E+0
   LON12    1.50000000000000E+0

NonLinearIncrement       0   Yes  "SLU_242"
   LON1    1.35000000000000E+0
   LON2    1.35000000000000E+0
   LON4    1.50000000000000E+0
   LON7    9.00000000000000E-1
   LON10    1.16000000000000E+0
   LON12    1.50000000000000E+0

NonLinearIncrement       0   Yes  "SLU_243"
   LON1    1.35000000000000E+0
   LON2    1.35000000000000E+0
   LON3    1.50000000000000E+0
   LON9    9.00000000000000E-1
   LON10    1.16000000000000E+0
   LON12    1.50000000000000E+0

NonLinearIncrement       0   Yes  "SLU_244"
   LON1    1.35000000000000E+0
   LON2    1.35000000000000E+0
   LON4    1.50000000000000E+0
```

```
   LON9    9.00000000000000E-1
   LON10    1.16000000000000E+0
   LON12    1.50000000000000E+0

NonLinearIncrement       0   Yes  "SLU_245"
   LON1    1.35000000000000E+0
   LON2    1.35000000000000E+0
   LON3    1.50000000000000E+0
   LON6    1.05000000000000E+0
   LON7    9.00000000000000E-1
   LON8    1.16000000000000E+0
   LON11    1.50000000000000E+0

NonLinearIncrement       0   Yes  "SLU_246"
   LON1    1.35000000000000E+0
   LON2    1.35000000000000E+0
   LON4    1.50000000000000E+0
   LON6    1.05000000000000E+0
   LON7    9.00000000000000E-1
   LON8    1.16000000000000E+0
   LON11    1.50000000000000E+0

NonLinearIncrement       0   Yes  "SLU_247"
   LON1    1.35000000000000E+0
   LON2    1.35000000000000E+0
   LON3    1.50000000000000E+0
   LON6    1.05000000000000E+0
   LON9    9.00000000000000E-1
   LON8    1.16000000000000E+0
   LON11    1.50000000000000E+0

NonLinearIncrement       0   Yes  "SLU_248"
   LON1    1.35000000000000E+0
   LON2    1.35000000000000E+0
   LON4    1.50000000000000E+0
   LON6    1.05000000000000E+0
   LON9    9.00000000000000E-1
   LON8    1.16000000000000E+0
   LON11    1.50000000000000E+0

NonLinearIncrement       0   Yes  "SLU_249"
   LON1    1.35000000000000E+0
   LON2    1.35000000000000E+0
   LON3    1.50000000000000E+0
   LON6    1.05000000000000E+0
   LON7    9.00000000000000E-1
   LON8    1.16000000000000E+0
   LON12    1.50000000000000E+0

NonLinearIncrement       0   Yes  "SLU_250"
   LON1    1.35000000000000E+0
   LON2    1.35000000000000E+0
   LON4    1.50000000000000E+0
   LON6    1.05000000000000E+0
```

```
   LON7    9.00000000000000E-1
   LON8    1.16000000000000E+0
   LON12    1.50000000000000E+0

NonLinearIncrement       0   Yes  "SLU_251"
   LON1    1.35000000000000E+0
   LON2    1.35000000000000E+0
   LON3    1.50000000000000E+0
   LON6    1.05000000000000E+0
   LON9    9.00000000000000E-1
   LON8    1.16000000000000E+0
   LON12    1.50000000000000E+0

NonLinearIncrement       0   Yes  "SLU_252"
   LON1    1.35000000000000E+0
   LON2    1.35000000000000E+0
   LON4    1.50000000000000E+0
   LON6    1.05000000000000E+0
   LON9    9.00000000000000E-1
   LON8    1.16000000000000E+0
   LON12    1.50000000000000E+0

NonLinearIncrement       0   Yes  "SLU_253"
   LON1    1.35000000000000E+0
   LON2    1.35000000000000E+0
   LON3    1.50000000000000E+0
   LON6    1.05000000000000E+0
   LON7    9.00000000000000E-1
   LON10    1.16000000000000E+0
   LON11    1.50000000000000E+0

NonLinearIncrement       0   Yes  "SLU_254"
   LON1    1.35000000000000E+0
   LON2    1.35000000000000E+0
   LON4    1.50000000000000E+0
   LON6    1.05000000000000E+0
   LON7    9.00000000000000E-1
   LON10    1.16000000000000E+0
   LON11    1.50000000000000E+0

NonLinearIncrement       0   Yes  "SLU_255"
   LON1    1.35000000000000E+0
   LON2    1.35000000000000E+0
   LON3    1.50000000000000E+0
   LON6    1.05000000000000E+0
   LON9    9.00000000000000E-1
   LON10    1.16000000000000E+0
   LON11    1.50000000000000E+0

NonLinearIncrement       0   Yes  "SLU_256"
   LON1    1.35000000000000E+0
   LON2    1.35000000000000E+0
   LON4    1.50000000000000E+0
   LON6    1.05000000000000E+0
```

```
   LON9    9.00000000000000E-1
   LON10    1.16000000000000E+0
   LON11    1.50000000000000E+0

NonLinearIncrement       0   Yes  "SLU_257"
   LON1    1.35000000000000E+0
   LON2    1.35000000000000E+0
   LON3    1.50000000000000E+0
   LON6    1.05000000000000E+0
   LON7    9.00000000000000E-1
   LON10    1.16000000000000E+0
   LON12    1.50000000000000E+0

NonLinearIncrement       0   Yes  "SLU_258"
   LON1    1.35000000000000E+0
   LON2    1.35000000000000E+0
   LON4    1.50000000000000E+0
   LON6    1.05000000000000E+0
   LON7    9.00000000000000E-1
   LON10    1.16000000000000E+0
   LON12    1.50000000000000E+0

NonLinearIncrement       0   Yes  "SLU_259"
   LON1    1.35000000000000E+0
   LON2    1.35000000000000E+0
   LON3    1.50000000000000E+0
   LON6    1.05000000000000E+0
   LON9    9.00000000000000E-1
   LON10    1.16000000000000E+0
   LON12    1.50000000000000E+0

NonLinearIncrement       0   Yes  "SLU_260"
   LON1    1.35000000000000E+0
   LON2    1.35000000000000E+0
   LON4    1.50000000000000E+0
   LON6    1.05000000000000E+0
   LON9    9.00000000000000E-1
   LON10    1.16000000000000E+0
   LON12    1.50000000000000E+0

NonLinearIncrement       0   Yes  "SLV_01"
   LON1    1.00000000000000E+0
   LON2    1.00000000000000E+0
   LON3    1.00000000000000E+0
   LON13    1.00000000000000E+0
   LON14    3.00000000000000E-1
   LON15    3.00000000000000E-1

NonLinearIncrement       0   Yes  "SLV_02"
   LON1    1.00000000000000E+0
   LON2    1.00000000000000E+0
   LON4    1.00000000000000E+0
   LON13    1.00000000000000E+0
   LON14    3.00000000000000E-1
```

```
   LON15    3.00000000000000E-1

NonLinearIncrement       0   Yes  "SLV_03"
   LON1    1.00000000000000E+0
   LON2    1.00000000000000E+0
   LON3    1.00000000000000E+0
   LON13   -1.00000000000000E+0
   LON14    3.00000000000000E-1
   LON15    3.00000000000000E-1

NonLinearIncrement       0   Yes  "SLV_04"
   LON1    1.00000000000000E+0
   LON2    1.00000000000000E+0
   LON4    1.00000000000000E+0
   LON13   -1.00000000000000E+0
   LON14    3.00000000000000E-1
   LON15    3.00000000000000E-1

NonLinearIncrement       0   Yes  "SLV_05"
   LON1    1.00000000000000E+0
   LON2    1.00000000000000E+0
   LON3    1.00000000000000E+0
   LON5    2.00000000000000E-1
   LON13    1.00000000000000E+0
   LON14    3.00000000000000E-1
   LON15    3.00000000000000E-1

NonLinearIncrement       0   Yes  "SLV_06"
   LON1    1.00000000000000E+0
   LON2    1.00000000000000E+0
   LON4    1.00000000000000E+0
   LON5    2.00000000000000E-1
   LON13    1.00000000000000E+0
   LON14    3.00000000000000E-1
   LON15    3.00000000000000E-1

NonLinearIncrement       0   Yes  "SLV_07"
   LON1    1.00000000000000E+0
   LON2    1.00000000000000E+0
   LON3    1.00000000000000E+0
   LON5    2.00000000000000E-1
   LON13   -1.00000000000000E+0
   LON14    3.00000000000000E-1
   LON15    3.00000000000000E-1

NonLinearIncrement       0   Yes  "SLV_08"
   LON1    1.00000000000000E+0
   LON2    1.00000000000000E+0
   LON4    1.00000000000000E+0
   LON5    2.00000000000000E-1
   LON13   -1.00000000000000E+0
   LON14    3.00000000000000E-1
   LON15    3.00000000000000E-1
```

```
NonLinearIncrement       0   Yes  "SLV_09"
   LON1    1.00000000000000E+0
   LON2    1.00000000000000E+0
   LON3    1.00000000000000E+0
   LON13    3.00000000000000E-1
   LON14    1.00000000000000E+0
   LON15    3.00000000000000E-1

NonLinearIncrement       0   Yes  "SLV_10"
   LON1    1.00000000000000E+0
   LON2    1.00000000000000E+0
   LON4    1.00000000000000E+0
   LON13    3.00000000000000E-1
   LON14    1.00000000000000E+0
   LON15    3.00000000000000E-1

NonLinearIncrement       0   Yes  "SLV_11"
   LON1    1.00000000000000E+0
   LON2    1.00000000000000E+0
   LON3    1.00000000000000E+0
   LON13    3.00000000000000E-1
   LON14   -1.00000000000000E+0
   LON15    3.00000000000000E-1

NonLinearIncrement       0   Yes  "SLV_12"
   LON1    1.00000000000000E+0
   LON2    1.00000000000000E+0
   LON4    1.00000000000000E+0
   LON13    3.00000000000000E-1
   LON14   -1.00000000000000E+0
   LON15    3.00000000000000E-1

NonLinearIncrement       0   Yes  "SLV_13"
   LON1    1.00000000000000E+0
   LON2    1.00000000000000E+0
   LON3    1.00000000000000E+0
   LON5    2.00000000000000E-1
   LON13    3.00000000000000E-1
   LON14    1.00000000000000E+0
   LON15    3.00000000000000E-1

NonLinearIncrement       0   Yes  "SLV_14"
   LON1    1.00000000000000E+0
   LON2    1.00000000000000E+0
   LON4    1.00000000000000E+0
   LON5    2.00000000000000E-1
   LON13    3.00000000000000E-1
   LON14    1.00000000000000E+0
   LON15    3.00000000000000E-1

NonLinearIncrement       0   Yes  "SLV_15"
   LON1    1.00000000000000E+0
   LON2    1.00000000000000E+0
   LON3    1.00000000000000E+0
```

```
   LON5    2.00000000000000E-1
   LON13    3.00000000000000E-1
   LON14   -1.00000000000000E+0
   LON15    3.00000000000000E-1

NonLinearIncrement       0   Yes  "SLV_16"
   LON1    1.00000000000000E+0
   LON2    1.00000000000000E+0
   LON4    1.00000000000000E+0
   LON5    2.00000000000000E-1
   LON13    3.00000000000000E-1
   LON14   -1.00000000000000E+0
   LON15    3.00000000000000E-1

NonLinearIncrement       0   Yes  "SLV_17"
   LON1    1.00000000000000E+0
   LON2    1.00000000000000E+0
   LON3    1.00000000000000E+0
   LON13    3.00000000000000E-1
   LON14    3.00000000000000E-1
   LON15    1.00000000000000E+0

NonLinearIncrement       0   Yes  "SLV_18"
   LON1    1.00000000000000E+0
   LON2    1.00000000000000E+0
   LON4    1.00000000000000E+0
   LON13    3.00000000000000E-1
   LON14    3.00000000000000E-1
   LON15    1.00000000000000E+0

NonLinearIncrement       0   Yes  "SLV_19"
   LON1    1.00000000000000E+0
   LON2    1.00000000000000E+0
   LON3    1.00000000000000E+0
   LON13    3.00000000000000E-1
   LON14    3.00000000000000E-1
   LON15   -1.00000000000000E+0

NonLinearIncrement       0   Yes  "SLV_20"
   LON1    1.00000000000000E+0
   LON2    1.00000000000000E+0
   LON4    1.00000000000000E+0
   LON13    3.00000000000000E-1
   LON14    3.00000000000000E-1
   LON15   -1.00000000000000E+0

NonLinearIncrement       0   Yes  "SLV_21"
   LON1    1.00000000000000E+0
   LON2    1.00000000000000E+0
   LON3    1.00000000000000E+0
   LON5    2.00000000000000E-1
   LON13    3.00000000000000E-1
   LON14    3.00000000000000E-1
   LON15    1.00000000000000E+0
```

```
NonLinearIncrement       0   Yes  "SLV_22"
   LON1    1.00000000000000E+0
   LON2    1.00000000000000E+0
   LON4    1.00000000000000E+0
   LON5    2.00000000000000E-1
   LON13    3.00000000000000E-1
   LON14    3.00000000000000E-1
   LON15    1.00000000000000E+0

NonLinearIncrement       0   Yes  "SLV_23"
   LON1    1.00000000000000E+0
   LON2    1.00000000000000E+0
   LON3    1.00000000000000E+0
   LON5    2.00000000000000E-1
   LON13    3.00000000000000E-1
   LON14    3.00000000000000E-1
   LON15   -1.00000000000000E+0

NonLinearIncrement       0   Yes  "SLV_24"
   LON1    1.00000000000000E+0
   LON2    1.00000000000000E+0
   LON4    1.00000000000000E+0
   LON5    2.00000000000000E-1
   LON13    3.00000000000000E-1
   LON14    3.00000000000000E-1
   LON15   -1.00000000000000E+0

NonLinearIncrement       0   Yes  "SLE_000"
   LON1    1.00000000000000E+0
   LON2    1.00000000000000E+0
   LON3    1.00000000000000E+0

NonLinearIncrement       0   Yes  "SLE_001"
   LON1    1.00000000000000E+0
   LON2    1.00000000000000E+0
   LON4    1.00000000000000E+0

NonLinearIncrement       0   Yes  "SLE_01"
   LON1    1.00000000000000E+0
   LON2    1.00000000000000E+0
   LON3    1.00000000000000E+0
   LON5    1.00000000000000E+0

NonLinearIncrement       0   Yes  "SLE_02"
   LON1    1.00000000000000E+0
   LON2    1.00000000000000E+0
   LON4    1.00000000000000E+0
   LON5    1.00000000000000E+0

NonLinearIncrement       0   Yes  "SLE_03"
   LON1    1.00000000000000E+0
   LON2    1.00000000000000E+0
   LON3    1.00000000000000E+0
```

```
   LON6    1.00000000000000E+0

NonLinearIncrement       0   Yes  "SLE_04"
   LON1    1.00000000000000E+0
   LON2    1.00000000000000E+0
   LON4    1.00000000000000E+0
   LON6    1.00000000000000E+0

NonLinearIncrement       0   Yes  "SLE_05"
   LON1    1.00000000000000E+0
   LON2    1.00000000000000E+0
   LON3    1.00000000000000E+0
   LON7    1.00000000000000E+0

NonLinearIncrement       0   Yes  "SLE_06"
   LON1    1.00000000000000E+0
   LON2    1.00000000000000E+0
   LON4    1.00000000000000E+0
   LON7    1.00000000000000E+0

NonLinearIncrement       0   Yes  "SLE_07"
   LON1    1.00000000000000E+0
   LON2    1.00000000000000E+0
   LON3    1.00000000000000E+0
   LON9    1.00000000000000E+0

NonLinearIncrement       0   Yes  "SLE_08"
   LON1    1.00000000000000E+0
   LON2    1.00000000000000E+0
   LON4    1.00000000000000E+0
   LON9    1.00000000000000E+0

NonLinearIncrement       0   Yes  "SLE_09"
   LON1    1.00000000000000E+0
   LON2    1.00000000000000E+0
   LON3    1.00000000000000E+0
   LON8    1.00000000000000E+0

NonLinearIncrement       0   Yes  "SLE_10"
   LON1    1.00000000000000E+0
   LON2    1.00000000000000E+0
   LON4    1.00000000000000E+0
   LON8    1.00000000000000E+0

NonLinearIncrement       0   Yes  "SLE_11"
   LON1    1.00000000000000E+0
   LON2    1.00000000000000E+0
   LON3    1.00000000000000E+0
   LON10    1.00000000000000E+0

NonLinearIncrement       0   Yes  "SLE_12"
   LON1    1.00000000000000E+0
   LON2    1.00000000000000E+0
   LON4    1.00000000000000E+0
```

```
   LON10    1.00000000000000E+0

NonLinearIncrement       0   Yes  "SLE_13"
   LON1    1.00000000000000E+0
   LON2    1.00000000000000E+0
   LON3    1.00000000000000E+0
   LON11    1.00000000000000E+0

NonLinearIncrement       0   Yes  "SLE_14"
   LON1    1.00000000000000E+0
   LON2    1.00000000000000E+0
   LON4    1.00000000000000E+0
   LON11    1.00000000000000E+0

NonLinearIncrement       0   Yes  "SLE_15"
   LON1    1.00000000000000E+0
   LON2    1.00000000000000E+0
   LON3    1.00000000000000E+0
   LON12    1.00000000000000E+0

NonLinearIncrement       0   Yes  "SLE_16"
   LON1    1.00000000000000E+0
   LON2    1.00000000000000E+0
   LON4    1.00000000000000E+0
   LON12    1.00000000000000E+0

NonLinearIncrement       0   Yes  "SLE_17"
   LON1    1.00000000000000E+0
   LON2    1.00000000000000E+0
   LON3    1.00000000000000E+0
   LON5    1.00000000000000E+0
   LON7    6.00000000000000E-1

NonLinearIncrement       0   Yes  "SLE_18"
   LON1    1.00000000000000E+0
   LON2    1.00000000000000E+0
   LON4    1.00000000000000E+0
   LON5    1.00000000000000E+0
   LON7    6.00000000000000E-1

NonLinearIncrement       0   Yes  "SLE_19"
   LON1    1.00000000000000E+0
   LON2    1.00000000000000E+0
   LON3    1.00000000000000E+0
   LON5    1.00000000000000E+0
   LON9    6.00000000000000E-1

NonLinearIncrement       0   Yes  "SLE_20"
   LON1    1.00000000000000E+0
   LON2    1.00000000000000E+0
   LON4    1.00000000000000E+0
   LON5    1.00000000000000E+0
   LON9    6.00000000000000E-1
```

```
NonLinearIncrement       0   Yes  "SLE_21"
   LON1    1.00000000000000E+0
   LON2    1.00000000000000E+0
   LON3    1.00000000000000E+0
   LON5    1.00000000000000E+0
   LON11    6.00000000000000E-1

NonLinearIncrement       0   Yes  "SLE_22"
   LON1    1.00000000000000E+0
   LON2    1.00000000000000E+0
   LON4    1.00000000000000E+0
   LON5    1.00000000000000E+0
   LON11    6.00000000000000E-1

NonLinearIncrement       0   Yes  "SLE_23"
   LON1    1.00000000000000E+0
   LON2    1.00000000000000E+0
   LON3    1.00000000000000E+0
   LON5    1.00000000000000E+0
   LON12    6.00000000000000E-1

NonLinearIncrement       0   Yes  "SLE_24"
   LON1    1.00000000000000E+0
   LON2    1.00000000000000E+0
   LON4    1.00000000000000E+0
   LON5    1.00000000000000E+0
   LON12    6.00000000000000E-1

NonLinearIncrement       0   Yes  "SLE_25"
   LON1    1.00000000000000E+0
   LON2    1.00000000000000E+0
   LON3    1.00000000000000E+0
   LON5    1.00000000000000E+0
   LON7    6.00000000000000E-1
   LON11    6.00000000000000E-1

NonLinearIncrement       0   Yes  "SLE_26"
   LON1    1.00000000000000E+0
   LON2    1.00000000000000E+0
   LON4    1.00000000000000E+0
   LON5    1.00000000000000E+0
   LON7    6.00000000000000E-1
   LON11    6.00000000000000E-1

NonLinearIncrement       0   Yes  "SLE_27"
   LON1    1.00000000000000E+0
   LON2    1.00000000000000E+0
   LON3    1.00000000000000E+0
   LON5    1.00000000000000E+0
   LON9    6.00000000000000E-1
   LON12    6.00000000000000E-1

NonLinearIncrement       0   Yes  "SLE_28"
   LON1    1.00000000000000E+0
```

```
   LON2    1.00000000000000E+0
   LON4    1.00000000000000E+0
   LON5    1.00000000000000E+0
   LON9    6.00000000000000E-1
   LON12    6.00000000000000E-1

NonLinearIncrement       0   Yes  "SLE_29"
   LON1    1.00000000000000E+0
   LON2    1.00000000000000E+0
   LON3    1.00000000000000E+0
   LON6    1.00000000000000E+0
   LON7    6.00000000000000E-1

NonLinearIncrement       0   Yes  "SLE_30"
   LON1    1.00000000000000E+0
   LON2    1.00000000000000E+0
   LON4    1.00000000000000E+0
   LON6    1.00000000000000E+0
   LON7    6.00000000000000E-1

NonLinearIncrement       0   Yes  "SLE_31"
   LON1    1.00000000000000E+0
   LON2    1.00000000000000E+0
   LON3    1.00000000000000E+0
   LON6    1.00000000000000E+0
   LON9    6.00000000000000E-1

NonLinearIncrement       0   Yes  "SLE_32"
   LON1    1.00000000000000E+0
   LON2    1.00000000000000E+0
   LON4    1.00000000000000E+0
   LON6    1.00000000000000E+0
   LON9    6.00000000000000E-1

NonLinearIncrement       0   Yes  "SLE_33"
   LON1    1.00000000000000E+0
   LON2    1.00000000000000E+0
   LON3    1.00000000000000E+0
   LON6    1.00000000000000E+0
   LON8    8.00000000000000E-1

NonLinearIncrement       0   Yes  "SLE_34"
   LON1    1.00000000000000E+0
   LON2    1.00000000000000E+0
   LON4    1.00000000000000E+0
   LON6    1.00000000000000E+0
   LON8    8.00000000000000E-1

NonLinearIncrement       0   Yes  "SLE_35"
   LON1    1.00000000000000E+0
   LON2    1.00000000000000E+0
   LON3    1.00000000000000E+0
   LON6    1.00000000000000E+0
   LON10    8.00000000000000E-1
```

```
NonLinearIncrement       0   Yes  "SLE_36"
   LON1    1.00000000000000E+0
   LON2    1.00000000000000E+0
   LON4    1.00000000000000E+0
   LON6    1.00000000000000E+0
   LON10    8.00000000000000E-1

NonLinearIncrement       0   Yes  "SLE_37"
   LON1    1.00000000000000E+0
   LON2    1.00000000000000E+0
   LON3    1.00000000000000E+0
   LON6    1.00000000000000E+0
   LON11    6.00000000000000E-1

NonLinearIncrement       0   Yes  "SLE_38"
   LON1    1.00000000000000E+0
   LON2    1.00000000000000E+0
   LON4    1.00000000000000E+0
   LON6    1.00000000000000E+0
   LON11    6.00000000000000E-1

NonLinearIncrement       0   Yes  "SLE_39"
   LON1    1.00000000000000E+0
   LON2    1.00000000000000E+0
   LON3    1.00000000000000E+0
   LON6    1.00000000000000E+0
   LON12    6.00000000000000E-1

NonLinearIncrement       0   Yes  "SLE_40"
   LON1    1.00000000000000E+0
   LON2    1.00000000000000E+0
   LON4    1.00000000000000E+0
   LON6    1.00000000000000E+0
   LON12    6.00000000000000E-1

NonLinearIncrement       0   Yes  "SLE_41"
   LON1    1.00000000000000E+0
   LON2    1.00000000000000E+0
   LON3    1.00000000000000E+0
   LON6    1.00000000000000E+0
   LON7    6.00000000000000E-1
   LON8    8.00000000000000E-1

NonLinearIncrement       0   Yes  "SLE_42"
   LON1    1.00000000000000E+0
   LON2    1.00000000000000E+0
   LON4    1.00000000000000E+0
   LON6    1.00000000000000E+0
   LON7    6.00000000000000E-1
   LON8    8.00000000000000E-1

NonLinearIncrement       0   Yes  "SLE_43"
   LON1    1.00000000000000E+0
```

```
   LON2    1.00000000000000E+0
   LON3    1.00000000000000E+0
   LON6    1.00000000000000E+0
   LON9    6.00000000000000E-1
   LON10    8.00000000000000E-1

NonLinearIncrement       0   Yes  "SLE_44"
   LON1    1.00000000000000E+0
   LON2    1.00000000000000E+0
   LON4    1.00000000000000E+0
   LON6    1.00000000000000E+0
   LON9    6.00000000000000E-1
   LON10    8.00000000000000E-1

NonLinearIncrement       0   Yes  "SLE_45"
   LON1    1.00000000000000E+0
   LON2    1.00000000000000E+0
   LON3    1.00000000000000E+0
   LON6    1.00000000000000E+0
   LON7    6.00000000000000E-1
   LON11    6.00000000000000E-1

NonLinearIncrement       0   Yes  "SLE_46"
   LON1    1.00000000000000E+0
   LON2    1.00000000000000E+0
   LON4    1.00000000000000E+0
   LON6    1.00000000000000E+0
   LON7    6.00000000000000E-1
   LON11    6.00000000000000E-1

NonLinearIncrement       0   Yes  "SLE_47"
   LON1    1.00000000000000E+0
   LON2    1.00000000000000E+0
   LON3    1.00000000000000E+0
   LON6    1.00000000000000E+0
   LON9    6.00000000000000E-1
   LON12    6.00000000000000E-1

NonLinearIncrement       0   Yes  "SLE_48"
   LON1    1.00000000000000E+0
   LON2    1.00000000000000E+0
   LON4    1.00000000000000E+0
   LON6    1.00000000000000E+0
   LON9    6.00000000000000E-1
   LON12    6.00000000000000E-1

NonLinearIncrement       0   Yes  "SLE_49"
   LON1    1.00000000000000E+0
   LON2    1.00000000000000E+0
   LON3    1.00000000000000E+0
   LON6    1.00000000000000E+0
   LON8    8.00000000000000E-1
   LON11    6.00000000000000E-1
```

```
NonLinearIncrement       0   Yes  "SLE_50"
   LON1    1.00000000000000E+0
   LON2    1.00000000000000E+0
   LON4    1.00000000000000E+0
   LON6    1.00000000000000E+0
   LON8    8.00000000000000E-1
   LON11    6.00000000000000E-1

NonLinearIncrement       0   Yes  "SLE_51"
   LON1    1.00000000000000E+0
   LON2    1.00000000000000E+0
   LON3    1.00000000000000E+0
   LON6    1.00000000000000E+0
   LON10    8.00000000000000E-1
   LON12    6.00000000000000E-1

NonLinearIncrement       0   Yes  "SLE_52"
   LON1    1.00000000000000E+0
   LON2    1.00000000000000E+0
   LON4    1.00000000000000E+0
   LON6    1.00000000000000E+0
   LON10    8.00000000000000E-1
   LON12    6.00000000000000E-1

NonLinearIncrement       0   Yes  "SLE_53"
   LON1    1.00000000000000E+0
   LON2    1.00000000000000E+0
   LON3    1.00000000000000E+0
   LON6    1.00000000000000E+0
   LON7    6.00000000000000E-1
   LON8    8.00000000000000E-1
   LON11    6.00000000000000E-1

NonLinearIncrement       0   Yes  "SLE_54"
   LON1    1.00000000000000E+0
   LON2    1.00000000000000E+0
   LON4    1.00000000000000E+0
   LON6    1.00000000000000E+0
   LON7    6.00000000000000E-1
   LON8    8.00000000000000E-1
   LON11    6.00000000000000E-1

NonLinearIncrement       0   Yes  "SLE_55"
   LON1    1.00000000000000E+0
   LON2    1.00000000000000E+0
   LON3    1.00000000000000E+0
   LON6    1.00000000000000E+0
   LON9    6.00000000000000E-1
   LON10    8.00000000000000E-1
   LON12    6.00000000000000E-1

NonLinearIncrement       0   Yes  "SLE_56"
   LON1    1.00000000000000E+0
   LON2    1.00000000000000E+0
```

```
   LON4    1.00000000000000E+0
   LON6    1.00000000000000E+0
   LON9    6.00000000000000E-1
   LON10    8.00000000000000E-1
   LON12    6.00000000000000E-1

NonLinearIncrement       0   Yes  "SLE_57"
   LON1    1.00000000000000E+0
   LON2    1.00000000000000E+0
   LON3    1.00000000000000E+0
   LON6    7.00000000000000E-1
   LON7    1.00000000000000E+0

NonLinearIncrement       0   Yes  "SLE_58"
   LON1    1.00000000000000E+0
   LON2    1.00000000000000E+0
   LON4    1.00000000000000E+0
   LON6    7.00000000000000E-1
   LON7    1.00000000000000E+0

NonLinearIncrement       0   Yes  "SLE_59"
   LON1    1.00000000000000E+0
   LON2    1.00000000000000E+0
   LON3    1.00000000000000E+0
   LON6    7.00000000000000E-1
   LON9    1.00000000000000E+0

NonLinearIncrement       0   Yes  "SLE_60"
   LON1    1.00000000000000E+0
   LON2    1.00000000000000E+0
   LON4    1.00000000000000E+0
   LON6    7.00000000000000E-1
   LON9    1.00000000000000E+0

NonLinearIncrement       0   Yes  "SLE_61"
   LON1    1.00000000000000E+0
   LON2    1.00000000000000E+0
   LON3    1.00000000000000E+0
   LON7    1.00000000000000E+0
   LON8    8.00000000000000E-1

NonLinearIncrement       0   Yes  "SLE_62"
   LON1    1.00000000000000E+0
   LON2    1.00000000000000E+0
   LON4    1.00000000000000E+0
   LON7    1.00000000000000E+0
   LON8    8.00000000000000E-1

NonLinearIncrement       0   Yes  "SLE_63"
   LON1    1.00000000000000E+0
   LON2    1.00000000000000E+0
   LON3    1.00000000000000E+0
   LON9    1.00000000000000E+0
   LON8    8.00000000000000E-1
```

```
NonLinearIncrement       0   Yes  "SLE_64"
   LON1    1.00000000000000E+0
   LON2    1.00000000000000E+0
   LON4    1.00000000000000E+0
   LON9    1.00000000000000E+0
   LON8    8.00000000000000E-1

NonLinearIncrement       0   Yes  "SLE_65"
   LON1    1.00000000000000E+0
   LON2    1.00000000000000E+0
   LON3    1.00000000000000E+0
   LON7    1.00000000000000E+0
   LON10    8.00000000000000E-1

NonLinearIncrement       0   Yes  "SLE_66"
   LON1    1.00000000000000E+0
   LON2    1.00000000000000E+0
   LON4    1.00000000000000E+0
   LON7    1.00000000000000E+0
   LON10    8.00000000000000E-1

NonLinearIncrement       0   Yes  "SLE_67"
   LON1    1.00000000000000E+0
   LON2    1.00000000000000E+0
   LON3    1.00000000000000E+0
   LON9    1.00000000000000E+0
   LON10    8.00000000000000E-1

NonLinearIncrement       0   Yes  "SLE_68"
   LON1    1.00000000000000E+0
   LON2    1.00000000000000E+0
   LON4    1.00000000000000E+0
   LON9    1.00000000000000E+0
   LON10    8.00000000000000E-1

NonLinearIncrement       0   Yes  "SLE_69"
   LON1    1.00000000000000E+0
   LON2    1.00000000000000E+0
   LON3    1.00000000000000E+0
   LON7    1.00000000000000E+0
   LON11    6.00000000000000E-1

NonLinearIncrement       0   Yes  "SLE_70"
   LON1    1.00000000000000E+0
   LON2    1.00000000000000E+0
   LON4    1.00000000000000E+0
   LON7    1.00000000000000E+0
   LON11    6.00000000000000E-1

NonLinearIncrement       0   Yes  "SLE_71"
   LON1    1.00000000000000E+0
   LON2    1.00000000000000E+0
   LON3    1.00000000000000E+0
```

```
   LON9    1.00000000000000E+0
   LON11    6.00000000000000E-1

NonLinearIncrement       0   Yes  "SLE_72"
   LON1    1.00000000000000E+0
   LON2    1.00000000000000E+0
   LON4    1.00000000000000E+0
   LON9    1.00000000000000E+0
   LON11    6.00000000000000E-1

NonLinearIncrement       0   Yes  "SLE_73"
   LON1    1.00000000000000E+0
   LON2    1.00000000000000E+0
   LON3    1.00000000000000E+0
   LON7    1.00000000000000E+0
   LON12    6.00000000000000E-1

NonLinearIncrement       0   Yes  "SLE_74"
   LON1    1.00000000000000E+0
   LON2    1.00000000000000E+0
   LON4    1.00000000000000E+0
   LON7    1.00000000000000E+0
   LON12    6.00000000000000E-1

NonLinearIncrement       0   Yes  "SLE_75"
   LON1    1.00000000000000E+0
   LON2    1.00000000000000E+0
   LON3    1.00000000000000E+0
   LON9    1.00000000000000E+0
   LON12    6.00000000000000E-1

NonLinearIncrement       0   Yes  "SLE_76"
   LON1    1.00000000000000E+0
   LON2    1.00000000000000E+0
   LON4    1.00000000000000E+0
   LON9    1.00000000000000E+0
   LON12    6.00000000000000E-1

NonLinearIncrement       0   Yes  "SLE_77"
   LON1    1.00000000000000E+0
   LON2    1.00000000000000E+0
   LON3    1.00000000000000E+0
   LON6    7.00000000000000E-1
   LON7    1.00000000000000E+0
   LON8    8.00000000000000E-1

NonLinearIncrement       0   Yes  "SLE_78"
   LON1    1.00000000000000E+0
   LON2    1.00000000000000E+0
   LON4    1.00000000000000E+0
   LON6    7.00000000000000E-1
   LON7    1.00000000000000E+0
   LON8    8.00000000000000E-1
```

```
NonLinearIncrement       0   Yes  "SLE_79"
   LON1    1.00000000000000E+0
   LON2    1.00000000000000E+0
   LON3    1.00000000000000E+0
   LON6    7.00000000000000E-1
   LON9    1.00000000000000E+0
   LON8    8.00000000000000E-1

NonLinearIncrement       0   Yes  "SLE_80"
   LON1    1.00000000000000E+0
   LON2    1.00000000000000E+0
   LON4    1.00000000000000E+0
   LON6    7.00000000000000E-1
   LON9    1.00000000000000E+0
   LON8    8.00000000000000E-1

NonLinearIncrement       0   Yes  "SLE_81"
   LON1    1.00000000000000E+0
   LON2    1.00000000000000E+0
   LON3    1.00000000000000E+0
   LON6    7.00000000000000E-1
   LON7    1.00000000000000E+0
   LON10    8.00000000000000E-1

NonLinearIncrement       0   Yes  "SLE_82"
   LON1    1.00000000000000E+0
   LON2    1.00000000000000E+0
   LON4    1.00000000000000E+0
   LON6    7.00000000000000E-1
   LON7    1.00000000000000E+0
   LON10    8.00000000000000E-1

NonLinearIncrement       0   Yes  "SLE_83"
   LON1    1.00000000000000E+0
   LON2    1.00000000000000E+0
   LON3    1.00000000000000E+0
   LON6    7.00000000000000E-1
   LON9    1.00000000000000E+0
   LON10    8.00000000000000E-1

NonLinearIncrement       0   Yes  "SLE_84"
   LON1    1.00000000000000E+0
   LON2    1.00000000000000E+0
   LON4    1.00000000000000E+0
   LON6    7.00000000000000E-1
   LON9    1.00000000000000E+0
   LON10    8.00000000000000E-1

NonLinearIncrement       0   Yes  "SLE_85"
   LON1    1.00000000000000E+0
   LON2    1.00000000000000E+0
   LON3    1.00000000000000E+0
   LON6    7.00000000000000E-1
   LON7    1.00000000000000E+0
```

```
   LON11    6.00000000000000E-1

NonLinearIncrement       0   Yes  "SLE_86"
   LON1    1.00000000000000E+0
   LON2    1.00000000000000E+0
   LON4    1.00000000000000E+0
   LON6    7.00000000000000E-1
   LON7    1.00000000000000E+0
   LON11    6.00000000000000E-1

NonLinearIncrement       0   Yes  "SLE_87"
   LON1    1.00000000000000E+0
   LON2    1.00000000000000E+0
   LON3    1.00000000000000E+0
   LON6    7.00000000000000E-1
   LON9    1.00000000000000E+0
   LON11    6.00000000000000E-1

NonLinearIncrement       0   Yes  "SLE_88"
   LON1    1.00000000000000E+0
   LON2    1.00000000000000E+0
   LON4    1.00000000000000E+0
   LON6    7.00000000000000E-1
   LON9    1.00000000000000E+0
   LON11    6.00000000000000E-1

NonLinearIncrement       0   Yes  "SLE_89"
   LON1    1.00000000000000E+0
   LON2    1.00000000000000E+0
   LON3    1.00000000000000E+0
   LON6    7.00000000000000E-1
   LON7    1.00000000000000E+0
   LON12    6.00000000000000E-1

NonLinearIncrement       0   Yes  "SLE_90"
   LON1    1.00000000000000E+0
   LON2    1.00000000000000E+0
   LON4    1.00000000000000E+0
   LON6    7.00000000000000E-1
   LON7    1.00000000000000E+0
   LON12    6.00000000000000E-1

NonLinearIncrement       0   Yes  "SLE_91"
   LON1    1.00000000000000E+0
   LON2    1.00000000000000E+0
   LON3    1.00000000000000E+0
   LON6    7.00000000000000E-1
   LON9    1.00000000000000E+0
   LON12    6.00000000000000E-1

NonLinearIncrement       0   Yes  "SLE_92"
   LON1    1.00000000000000E+0
   LON2    1.00000000000000E+0
   LON4    1.00000000000000E+0
```

```
   LON6    7.00000000000000E-1
   LON9    1.00000000000000E+0
   LON12    6.00000000000000E-1

NonLinearIncrement       0   Yes  "SLE_93"
   LON1    1.00000000000000E+0
   LON2    1.00000000000000E+0
   LON3    1.00000000000000E+0
   LON7    1.00000000000000E+0
   LON8    8.00000000000000E-1
   LON11    6.00000000000000E-1

NonLinearIncrement       0   Yes  "SLE_94"
   LON1    1.00000000000000E+0
   LON2    1.00000000000000E+0
   LON4    1.00000000000000E+0
   LON7    1.00000000000000E+0
   LON8    8.00000000000000E-1
   LON11    6.00000000000000E-1

NonLinearIncrement       0   Yes  "SLE_95"
   LON1    1.00000000000000E+0
   LON2    1.00000000000000E+0
   LON3    1.00000000000000E+0
   LON9    1.00000000000000E+0
   LON8    8.00000000000000E-1
   LON11    6.00000000000000E-1

NonLinearIncrement       0   Yes  "SLE_96"
   LON1    1.00000000000000E+0
   LON2    1.00000000000000E+0
   LON4    1.00000000000000E+0
   LON9    1.00000000000000E+0
   LON8    8.00000000000000E-1
   LON11    6.00000000000000E-1

NonLinearIncrement       0   Yes  "SLE_97"
   LON1    1.00000000000000E+0
   LON2    1.00000000000000E+0
   LON3    1.00000000000000E+0
   LON7    1.00000000000000E+0
   LON8    8.00000000000000E-1
   LON12    6.00000000000000E-1

NonLinearIncrement       0   Yes  "SLE_98"
   LON1    1.00000000000000E+0
   LON2    1.00000000000000E+0
   LON4    1.00000000000000E+0
   LON7    1.00000000000000E+0
   LON8    8.00000000000000E-1
   LON12    6.00000000000000E-1

NonLinearIncrement       0   Yes  "SLE_99"
   LON1    1.00000000000000E+0
```

```
   LON2    1.00000000000000E+0
   LON3    1.00000000000000E+0
   LON9    1.00000000000000E+0
   LON8    8.00000000000000E-1
   LON12    6.00000000000000E-1

NonLinearIncrement       0   Yes  "SLE_100"
   LON1    1.00000000000000E+0
   LON2    1.00000000000000E+0
   LON4    1.00000000000000E+0
   LON9    1.00000000000000E+0
   LON8    8.00000000000000E-1
   LON12    6.00000000000000E-1

NonLinearIncrement       0   Yes  "SLE_101"
   LON1    1.00000000000000E+0
   LON2    1.00000000000000E+0
   LON3    1.00000000000000E+0
   LON7    1.00000000000000E+0
   LON10    8.00000000000000E-1
   LON11    6.00000000000000E-1

NonLinearIncrement       0   Yes  "SLE_102"
   LON1    1.00000000000000E+0
   LON2    1.00000000000000E+0
   LON4    1.00000000000000E+0
   LON7    1.00000000000000E+0
   LON10    8.00000000000000E-1
   LON11    6.00000000000000E-1

NonLinearIncrement       0   Yes  "SLE_103"
   LON1    1.00000000000000E+0
   LON2    1.00000000000000E+0
   LON3    1.00000000000000E+0
   LON9    1.00000000000000E+0
   LON10    8.00000000000000E-1
   LON11    6.00000000000000E-1

NonLinearIncrement       0   Yes  "SLE_104"
   LON1    1.00000000000000E+0
   LON2    1.00000000000000E+0
   LON4    1.00000000000000E+0
   LON9    1.00000000000000E+0
   LON10    8.00000000000000E-1
   LON11    6.00000000000000E-1

NonLinearIncrement       0   Yes  "SLE_105"
   LON1    1.00000000000000E+0
   LON2    1.00000000000000E+0
   LON3    1.00000000000000E+0
   LON7    1.00000000000000E+0
   LON10    8.00000000000000E-1
   LON12    6.00000000000000E-1
```

```
NonLinearIncrement       0   Yes  "SLE_106"
   LON1    1.00000000000000E+0
   LON2    1.00000000000000E+0
   LON4    1.00000000000000E+0
   LON7    1.00000000000000E+0
   LON10    8.00000000000000E-1
   LON12    6.00000000000000E-1

NonLinearIncrement       0   Yes  "SLE_107"
   LON1    1.00000000000000E+0
   LON2    1.00000000000000E+0
   LON3    1.00000000000000E+0
   LON9    1.00000000000000E+0
   LON10    8.00000000000000E-1
   LON12    6.00000000000000E-1

NonLinearIncrement       0   Yes  "SLE_108"
   LON1    1.00000000000000E+0
   LON2    1.00000000000000E+0
   LON4    1.00000000000000E+0
   LON9    1.00000000000000E+0
   LON10    8.00000000000000E-1
   LON12    6.00000000000000E-1

NonLinearIncrement       0   Yes  "SLE_109"
   LON1    1.00000000000000E+0
   LON2    1.00000000000000E+0
   LON3    1.00000000000000E+0
   LON6    7.00000000000000E-1
   LON7    1.00000000000000E+0
   LON8    8.00000000000000E-1
   LON11    6.00000000000000E-1

NonLinearIncrement       0   Yes  "SLE_110"
   LON1    1.00000000000000E+0
   LON2    1.00000000000000E+0
   LON4    1.00000000000000E+0
   LON6    7.00000000000000E-1
   LON7    1.00000000000000E+0
   LON8    8.00000000000000E-1
   LON11    6.00000000000000E-1

NonLinearIncrement       0   Yes  "SLE_111"
   LON1    1.00000000000000E+0
   LON2    1.00000000000000E+0
   LON3    1.00000000000000E+0
   LON6    7.00000000000000E-1
   LON9    1.00000000000000E+0
   LON8    8.00000000000000E-1
   LON11    6.00000000000000E-1

NonLinearIncrement       0   Yes  "SLE_112"
   LON1    1.00000000000000E+0
   LON2    1.00000000000000E+0
```

```
   LON4    1.00000000000000E+0
   LON6    7.00000000000000E-1
   LON9    1.00000000000000E+0
   LON8    8.00000000000000E-1
   LON11    6.00000000000000E-1

NonLinearIncrement       0   Yes  "SLE_113"
   LON1    1.00000000000000E+0
   LON2    1.00000000000000E+0
   LON3    1.00000000000000E+0
   LON6    7.00000000000000E-1
   LON7    1.00000000000000E+0
   LON8    8.00000000000000E-1
   LON12    6.00000000000000E-1

NonLinearIncrement       0   Yes  "SLE_114"
   LON1    1.00000000000000E+0
   LON2    1.00000000000000E+0
   LON4    1.00000000000000E+0
   LON6    7.00000000000000E-1
   LON7    1.00000000000000E+0
   LON8    8.00000000000000E-1
   LON12    6.00000000000000E-1

NonLinearIncrement       0   Yes  "SLE_115"
   LON1    1.00000000000000E+0
   LON2    1.00000000000000E+0
   LON3    1.00000000000000E+0
   LON6    7.00000000000000E-1
   LON9    1.00000000000000E+0
   LON8    8.00000000000000E-1
   LON12    6.00000000000000E-1

NonLinearIncrement       0   Yes  "SLE_116"
   LON1    1.00000000000000E+0
   LON2    1.00000000000000E+0
   LON4    1.00000000000000E+0
   LON6    7.00000000000000E-1
   LON9    1.00000000000000E+0
   LON8    8.00000000000000E-1
   LON12    6.00000000000000E-1

NonLinearIncrement       0   Yes  "SLE_117"
   LON1    1.00000000000000E+0
   LON2    1.00000000000000E+0
   LON3    1.00000000000000E+0
   LON6    7.00000000000000E-1
   LON7    1.00000000000000E+0
   LON10    8.00000000000000E-1
   LON11    6.00000000000000E-1

NonLinearIncrement       0   Yes  "SLE_118"
   LON1    1.00000000000000E+0
   LON2    1.00000000000000E+0
```

```
   LON4    1.00000000000000E+0
   LON6    7.00000000000000E-1
   LON7    1.00000000000000E+0
   LON10    8.00000000000000E-1
   LON11    6.00000000000000E-1

NonLinearIncrement       0   Yes  "SLE_119"
   LON1    1.00000000000000E+0
   LON2    1.00000000000000E+0
   LON3    1.00000000000000E+0
   LON6    7.00000000000000E-1
   LON9    1.00000000000000E+0
   LON10    8.00000000000000E-1
   LON11    6.00000000000000E-1

NonLinearIncrement       0   Yes  "SLE_120"
   LON1    1.00000000000000E+0
   LON2    1.00000000000000E+0
   LON4    1.00000000000000E+0
   LON6    7.00000000000000E-1
   LON9    1.00000000000000E+0
   LON10    8.00000000000000E-1
   LON11    6.00000000000000E-1

NonLinearIncrement       0   Yes  "SLE_121"
   LON1    1.00000000000000E+0
   LON2    1.00000000000000E+0
   LON3    1.00000000000000E+0
   LON6    7.00000000000000E-1
   LON7    1.00000000000000E+0
   LON10    8.00000000000000E-1
   LON12    6.00000000000000E-1

NonLinearIncrement       0   Yes  "SLE_122"
   LON1    1.00000000000000E+0
   LON2    1.00000000000000E+0
   LON4    1.00000000000000E+0
   LON6    7.00000000000000E-1
   LON7    1.00000000000000E+0
   LON10    8.00000000000000E-1
   LON12    6.00000000000000E-1

NonLinearIncrement       0   Yes  "SLE_123"
   LON1    1.00000000000000E+0
   LON2    1.00000000000000E+0
   LON3    1.00000000000000E+0
   LON6    7.00000000000000E-1
   LON9    1.00000000000000E+0
   LON10    8.00000000000000E-1
   LON12    6.00000000000000E-1

NonLinearIncrement       0   Yes  "SLE_124"
   LON1    1.00000000000000E+0
   LON2    1.00000000000000E+0
```

```
   LON4    1.00000000000000E+0
   LON6    7.00000000000000E-1
   LON9    1.00000000000000E+0
   LON10    8.00000000000000E-1
   LON12    6.00000000000000E-1

NonLinearIncrement       0   Yes  "SLE_125"
   LON1    1.00000000000000E+0
   LON2    1.00000000000000E+0
   LON3    1.00000000000000E+0
   LON6    7.00000000000000E-1
   LON8    1.00000000000000E+0

NonLinearIncrement       0   Yes  "SLE_126"
   LON1    1.00000000000000E+0
   LON2    1.00000000000000E+0
   LON4    1.00000000000000E+0
   LON6    7.00000000000000E-1
   LON8    1.00000000000000E+0

NonLinearIncrement       0   Yes  "SLE_127"
   LON1    1.00000000000000E+0
   LON2    1.00000000000000E+0
   LON3    1.00000000000000E+0
   LON6    7.00000000000000E-1
   LON10    1.00000000000000E+0

NonLinearIncrement       0   Yes  "SLE_128"
   LON1    1.00000000000000E+0
   LON2    1.00000000000000E+0
   LON4    1.00000000000000E+0
   LON6    7.00000000000000E-1
   LON10    1.00000000000000E+0

NonLinearIncrement       0   Yes  "SLE_129"
   LON1    1.00000000000000E+0
   LON2    1.00000000000000E+0
   LON3    1.00000000000000E+0
   LON7    6.00000000000000E-1
   LON8    1.00000000000000E+0

NonLinearIncrement       0   Yes  "SLE_130"
   LON1    1.00000000000000E+0
   LON2    1.00000000000000E+0
   LON4    1.00000000000000E+0
   LON7    6.00000000000000E-1
   LON8    1.00000000000000E+0

NonLinearIncrement       0   Yes  "SLE_131"
   LON1    1.00000000000000E+0
   LON2    1.00000000000000E+0
   LON3    1.00000000000000E+0
   LON9    6.00000000000000E-1
   LON8    1.00000000000000E+0
```

```
NonLinearIncrement       0   Yes  "SLE_132"
   LON1    1.00000000000000E+0
   LON2    1.00000000000000E+0
   LON4    1.00000000000000E+0
   LON9    6.00000000000000E-1
   LON8    1.00000000000000E+0

NonLinearIncrement       0   Yes  "SLE_133"
   LON1    1.00000000000000E+0
   LON2    1.00000000000000E+0
   LON3    1.00000000000000E+0
   LON7    6.00000000000000E-1
   LON10    1.00000000000000E+0

NonLinearIncrement       0   Yes  "SLE_134"
   LON1    1.00000000000000E+0
   LON2    1.00000000000000E+0
   LON4    1.00000000000000E+0
   LON7    6.00000000000000E-1
   LON10    1.00000000000000E+0

NonLinearIncrement       0   Yes  "SLE_135"
   LON1    1.00000000000000E+0
   LON2    1.00000000000000E+0
   LON3    1.00000000000000E+0
   LON9    6.00000000000000E-1
   LON10    1.00000000000000E+0

NonLinearIncrement       0   Yes  "SLE_136"
   LON1    1.00000000000000E+0
   LON2    1.00000000000000E+0
   LON4    1.00000000000000E+0
   LON9    6.00000000000000E-1
   LON10    1.00000000000000E+0

NonLinearIncrement       0   Yes  "SLE_137"
   LON1    1.00000000000000E+0
   LON2    1.00000000000000E+0
   LON3    1.00000000000000E+0
   LON8    1.00000000000000E+0
   LON11    6.00000000000000E-1

NonLinearIncrement       0   Yes  "SLE_138"
   LON1    1.00000000000000E+0
   LON2    1.00000000000000E+0
   LON4    1.00000000000000E+0
   LON8    1.00000000000000E+0
   LON11    6.00000000000000E-1

NonLinearIncrement       0   Yes  "SLE_139"
   LON1    1.00000000000000E+0
   LON2    1.00000000000000E+0
   LON3    1.00000000000000E+0
```

```
   LON8    1.00000000000000E+0
   LON11    6.00000000000000E-1

NonLinearIncrement       0   Yes  "SLE_140"
   LON1    1.00000000000000E+0
   LON2    1.00000000000000E+0
   LON4    1.00000000000000E+0
   LON8    1.00000000000000E+0
   LON11    6.00000000000000E-1

NonLinearIncrement       0   Yes  "SLE_141"
   LON1    1.00000000000000E+0
   LON2    1.00000000000000E+0
   LON3    1.00000000000000E+0
   LON10    1.00000000000000E+0
   LON12    6.00000000000000E-1

NonLinearIncrement       0   Yes  "SLE_142"
   LON1    1.00000000000000E+0
   LON2    1.00000000000000E+0
   LON4    1.00000000000000E+0
   LON10    1.00000000000000E+0
   LON12    6.00000000000000E-1

NonLinearIncrement       0   Yes  "SLE_143"
   LON1    1.00000000000000E+0
   LON2    1.00000000000000E+0
   LON3    1.00000000000000E+0
   LON10    1.00000000000000E+0
   LON12    6.00000000000000E-1

NonLinearIncrement       0   Yes  "SLE_144"
   LON1    1.00000000000000E+0
   LON2    1.00000000000000E+0
   LON4    1.00000000000000E+0
   LON10    1.00000000000000E+0
   LON12    6.00000000000000E-1

NonLinearIncrement       0   Yes  "SLE_145"
   LON1    1.00000000000000E+0
   LON2    1.00000000000000E+0
   LON3    1.00000000000000E+0
   LON6    7.00000000000000E-1
   LON7    6.00000000000000E-1
   LON8    1.00000000000000E+0

NonLinearIncrement       0   Yes  "SLE_146"
   LON1    1.00000000000000E+0
   LON2    1.00000000000000E+0
   LON4    1.00000000000000E+0
   LON6    7.00000000000000E-1
   LON7    6.00000000000000E-1
   LON8    1.00000000000000E+0
```

```
NonLinearIncrement       0   Yes  "SLE_147"
   LON1    1.00000000000000E+0
   LON2    1.00000000000000E+0
   LON3    1.00000000000000E+0
   LON6    7.00000000000000E-1
   LON9    6.00000000000000E-1
   LON8    1.00000000000000E+0

NonLinearIncrement       0   Yes  "SLE_148"
   LON1    1.00000000000000E+0
   LON2    1.00000000000000E+0
   LON4    1.00000000000000E+0
   LON6    7.00000000000000E-1
   LON9    6.00000000000000E-1
   LON8    1.00000000000000E+0

NonLinearIncrement       0   Yes  "SLE_149"
   LON1    1.00000000000000E+0
   LON2    1.00000000000000E+0
   LON3    1.00000000000000E+0
   LON6    7.00000000000000E-1
   LON7    6.00000000000000E-1
   LON10    1.00000000000000E+0

NonLinearIncrement       0   Yes  "SLE_150"
   LON1    1.00000000000000E+0
   LON2    1.00000000000000E+0
   LON4    1.00000000000000E+0
   LON6    7.00000000000000E-1
   LON7    6.00000000000000E-1
   LON10    1.00000000000000E+0

NonLinearIncrement       0   Yes  "SLE_151"
   LON1    1.00000000000000E+0
   LON2    1.00000000000000E+0
   LON3    1.00000000000000E+0
   LON6    7.00000000000000E-1
   LON9    6.00000000000000E-1
   LON10    1.00000000000000E+0

NonLinearIncrement       0   Yes  "SLE_152"
   LON1    1.00000000000000E+0
   LON2    1.00000000000000E+0
   LON4    1.00000000000000E+0
   LON6    7.00000000000000E-1
   LON9    6.00000000000000E-1
   LON10    1.00000000000000E+0

NonLinearIncrement       0   Yes  "SLE_153"
   LON1    1.00000000000000E+0
   LON2    1.00000000000000E+0
   LON3    1.00000000000000E+0
   LON6    7.00000000000000E-1
   LON8    1.00000000000000E+0
```

```
   LON11    6.00000000000000E-1

NonLinearIncrement       0   Yes  "SLE_154"
   LON1    1.00000000000000E+0
   LON2    1.00000000000000E+0
   LON4    1.00000000000000E+0
   LON6    7.00000000000000E-1
   LON8    1.00000000000000E+0
   LON11    6.00000000000000E-1

NonLinearIncrement       0   Yes  "SLE_155"
   LON1    1.00000000000000E+0
   LON2    1.00000000000000E+0
   LON3    1.00000000000000E+0
   LON6    7.00000000000000E-1
   LON8    1.00000000000000E+0
   LON11    6.00000000000000E-1

NonLinearIncrement       0   Yes  "SLE_156"
   LON1    1.00000000000000E+0
   LON2    1.00000000000000E+0
   LON4    1.00000000000000E+0
   LON6    7.00000000000000E-1
   LON8    1.00000000000000E+0
   LON11    6.00000000000000E-1

NonLinearIncrement       0   Yes  "SLE_157"
   LON1    1.00000000000000E+0
   LON2    1.00000000000000E+0
   LON3    1.00000000000000E+0
   LON6    7.00000000000000E-1
   LON10    1.00000000000000E+0
   LON12    6.00000000000000E-1

NonLinearIncrement       0   Yes  "SLE_158"
   LON1    1.00000000000000E+0
   LON2    1.00000000000000E+0
   LON4    1.00000000000000E+0
   LON6    7.00000000000000E-1
   LON10    1.00000000000000E+0
   LON12    6.00000000000000E-1

NonLinearIncrement       0   Yes  "SLE_159"
   LON1    1.00000000000000E+0
   LON2    1.00000000000000E+0
   LON3    1.00000000000000E+0
   LON6    7.00000000000000E-1
   LON10    1.00000000000000E+0
   LON12    6.00000000000000E-1

NonLinearIncrement       0   Yes  "SLE_160"
   LON1    1.00000000000000E+0
   LON2    1.00000000000000E+0
   LON4    1.00000000000000E+0
```

```
   LON6    7.00000000000000E-1
   LON10    1.00000000000000E+0
   LON12    6.00000000000000E-1

NonLinearIncrement       0   Yes  "SLE_161"
   LON1    1.00000000000000E+0
   LON2    1.00000000000000E+0
   LON3    1.00000000000000E+0
   LON7    6.00000000000000E-1
   LON8    1.00000000000000E+0
   LON11    6.00000000000000E-1

NonLinearIncrement       0   Yes  "SLE_162"
   LON1    1.00000000000000E+0
   LON2    1.00000000000000E+0
   LON4    1.00000000000000E+0
   LON7    6.00000000000000E-1
   LON8    1.00000000000000E+0
   LON11    6.00000000000000E-1

NonLinearIncrement       0   Yes  "SLE_163"
   LON1    1.00000000000000E+0
   LON2    1.00000000000000E+0
   LON3    1.00000000000000E+0
   LON9    6.00000000000000E-1
   LON8    1.00000000000000E+0
   LON11    6.00000000000000E-1

NonLinearIncrement       0   Yes  "SLE_164"
   LON1    1.00000000000000E+0
   LON2    1.00000000000000E+0
   LON4    1.00000000000000E+0
   LON9    6.00000000000000E-1
   LON8    1.00000000000000E+0
   LON11    6.00000000000000E-1

NonLinearIncrement       0   Yes  "SLE_165"
   LON1    1.00000000000000E+0
   LON2    1.00000000000000E+0
   LON3    1.00000000000000E+0
   LON7    6.00000000000000E-1
   LON8    1.00000000000000E+0
   LON12    6.00000000000000E-1

NonLinearIncrement       0   Yes  "SLE_166"
   LON1    1.00000000000000E+0
   LON2    1.00000000000000E+0
   LON4    1.00000000000000E+0
   LON7    6.00000000000000E-1
   LON8    1.00000000000000E+0
   LON12    6.00000000000000E-1

NonLinearIncrement       0   Yes  "SLE_167"
   LON1    1.00000000000000E+0
```

```
   LON2    1.00000000000000E+0
   LON3    1.00000000000000E+0
   LON9    6.00000000000000E-1
   LON8    1.00000000000000E+0
   LON12    6.00000000000000E-1

NonLinearIncrement       0   Yes  "SLE_168"
   LON1    1.00000000000000E+0
   LON2    1.00000000000000E+0
   LON4    1.00000000000000E+0
   LON9    6.00000000000000E-1
   LON8    1.00000000000000E+0
   LON12    6.00000000000000E-1

NonLinearIncrement       0   Yes  "SLE_169"
   LON1    1.00000000000000E+0
   LON2    1.00000000000000E+0
   LON3    1.00000000000000E+0
   LON7    6.00000000000000E-1
   LON10    1.00000000000000E+0
   LON11    6.00000000000000E-1

NonLinearIncrement       0   Yes  "SLE_170"
   LON1    1.00000000000000E+0
   LON2    1.00000000000000E+0
   LON4    1.00000000000000E+0
   LON7    6.00000000000000E-1
   LON10    1.00000000000000E+0
   LON11    6.00000000000000E-1

NonLinearIncrement       0   Yes  "SLE_171"
   LON1    1.00000000000000E+0
   LON2    1.00000000000000E+0
   LON3    1.00000000000000E+0
   LON9    6.00000000000000E-1
   LON10    1.00000000000000E+0
   LON11    6.00000000000000E-1

NonLinearIncrement       0   Yes  "SLE_172"
   LON1    1.00000000000000E+0
   LON2    1.00000000000000E+0
   LON4    1.00000000000000E+0
   LON9    6.00000000000000E-1
   LON10    1.00000000000000E+0
   LON11    6.00000000000000E-1

NonLinearIncrement       0   Yes  "SLE_173"
   LON1    1.00000000000000E+0
   LON2    1.00000000000000E+0
   LON3    1.00000000000000E+0
   LON7    6.00000000000000E-1
   LON10    1.00000000000000E+0
   LON12    6.00000000000000E-1
```

```
NonLinearIncrement       0   Yes  "SLE_174"
   LON1    1.00000000000000E+0
   LON2    1.00000000000000E+0
   LON4    1.00000000000000E+0
   LON7    6.00000000000000E-1
   LON10    1.00000000000000E+0
   LON12    6.00000000000000E-1

NonLinearIncrement       0   Yes  "SLE_175"
   LON1    1.00000000000000E+0
   LON2    1.00000000000000E+0
   LON3    1.00000000000000E+0
   LON9    6.00000000000000E-1
   LON10    1.00000000000000E+0
   LON12    6.00000000000000E-1

NonLinearIncrement       0   Yes  "SLE_176"
   LON1    1.00000000000000E+0
   LON2    1.00000000000000E+0
   LON4    1.00000000000000E+0
   LON9    6.00000000000000E-1
   LON10    1.00000000000000E+0
   LON12    6.00000000000000E-1

NonLinearIncrement       0   Yes  "SLE_177"
   LON1    1.00000000000000E+0
   LON2    1.00000000000000E+0
   LON3    1.00000000000000E+0
   LON6    7.00000000000000E-1
   LON7    6.00000000000000E-1
   LON8    1.00000000000000E+0
   LON11    6.00000000000000E-1

NonLinearIncrement       0   Yes  "SLE_178"
   LON1    1.00000000000000E+0
   LON2    1.00000000000000E+0
   LON4    1.00000000000000E+0
   LON6    7.00000000000000E-1
   LON7    6.00000000000000E-1
   LON8    1.00000000000000E+0
   LON11    6.00000000000000E-1

NonLinearIncrement       0   Yes  "SLE_179"
   LON1    1.00000000000000E+0
   LON2    1.00000000000000E+0
   LON3    1.00000000000000E+0
   LON6    7.00000000000000E-1
   LON9    6.00000000000000E-1
   LON8    1.00000000000000E+0
   LON11    6.00000000000000E-1

NonLinearIncrement       0   Yes  "SLE_180"
   LON1    1.00000000000000E+0
   LON2    1.00000000000000E+0
```

```
   LON4    1.00000000000000E+0
   LON6    7.00000000000000E-1
   LON9    6.00000000000000E-1
   LON8    1.00000000000000E+0
   LON11    6.00000000000000E-1

NonLinearIncrement       0   Yes  "SLE_181"
   LON1    1.00000000000000E+0
   LON2    1.00000000000000E+0
   LON3    1.00000000000000E+0
   LON6    7.00000000000000E-1
   LON7    6.00000000000000E-1
   LON8    1.00000000000000E+0
   LON12    6.00000000000000E-1

NonLinearIncrement       0   Yes  "SLE_182"
   LON1    1.00000000000000E+0
   LON2    1.00000000000000E+0
   LON4    1.00000000000000E+0
   LON6    7.00000000000000E-1
   LON7    6.00000000000000E-1
   LON8    1.00000000000000E+0
   LON12    6.00000000000000E-1

NonLinearIncrement       0   Yes  "SLE_183"
   LON1    1.00000000000000E+0
   LON2    1.00000000000000E+0
   LON3    1.00000000000000E+0
   LON6    7.00000000000000E-1
   LON9    6.00000000000000E-1
   LON8    1.00000000000000E+0
   LON12    6.00000000000000E-1

NonLinearIncrement       0   Yes  "SLE_184"
   LON1    1.00000000000000E+0
   LON2    1.00000000000000E+0
   LON4    1.00000000000000E+0
   LON6    7.00000000000000E-1
   LON9    6.00000000000000E-1
   LON8    1.00000000000000E+0
   LON12    6.00000000000000E-1

NonLinearIncrement       0   Yes  "SLE_185"
   LON1    1.00000000000000E+0
   LON2    1.00000000000000E+0
   LON3    1.00000000000000E+0
   LON6    7.00000000000000E-1
   LON7    6.00000000000000E-1
   LON10    1.00000000000000E+0
   LON11    6.00000000000000E-1

NonLinearIncrement       0   Yes  "SLE_186"
   LON1    1.00000000000000E+0
   LON2    1.00000000000000E+0
```

```
   LON4    1.00000000000000E+0
   LON6    7.00000000000000E-1
   LON7    6.00000000000000E-1
   LON10    1.00000000000000E+0
   LON11    6.00000000000000E-1

NonLinearIncrement       0   Yes  "SLE_187"
   LON1    1.00000000000000E+0
   LON2    1.00000000000000E+0
   LON3    1.00000000000000E+0
   LON6    7.00000000000000E-1
   LON9    6.00000000000000E-1
   LON10    1.00000000000000E+0
   LON11    6.00000000000000E-1

NonLinearIncrement       0   Yes  "SLE_188"
   LON1    1.00000000000000E+0
   LON2    1.00000000000000E+0
   LON4    1.00000000000000E+0
   LON6    7.00000000000000E-1
   LON9    6.00000000000000E-1
   LON10    1.00000000000000E+0
   LON11    6.00000000000000E-1

NonLinearIncrement       0   Yes  "SLE_189"
   LON1    1.00000000000000E+0
   LON2    1.00000000000000E+0
   LON3    1.00000000000000E+0
   LON6    7.00000000000000E-1
   LON7    6.00000000000000E-1
   LON10    1.00000000000000E+0
   LON12    6.00000000000000E-1

NonLinearIncrement       0   Yes  "SLE_190"
   LON1    1.00000000000000E+0
   LON2    1.00000000000000E+0
   LON4    1.00000000000000E+0
   LON6    7.00000000000000E-1
   LON7    6.00000000000000E-1
   LON10    1.00000000000000E+0
   LON12    6.00000000000000E-1

NonLinearIncrement       0   Yes  "SLE_191"
   LON1    1.00000000000000E+0
   LON2    1.00000000000000E+0
   LON3    1.00000000000000E+0
   LON6    7.00000000000000E-1
   LON9    6.00000000000000E-1
   LON10    1.00000000000000E+0
   LON12    6.00000000000000E-1

NonLinearIncrement       0   Yes  "SLE_192"
   LON1    1.00000000000000E+0
   LON2    1.00000000000000E+0
```

```
   LON4    1.00000000000000E+0
   LON6    7.00000000000000E-1
   LON9    6.00000000000000E-1
   LON10    1.00000000000000E+0
   LON12    6.00000000000000E-1

NonLinearIncrement       0   Yes  "SLE_193"
   LON1    1.00000000000000E+0
   LON2    1.00000000000000E+0
   LON3    1.00000000000000E+0
   LON6    7.00000000000000E-1
   LON11    1.00000000000000E+0

NonLinearIncrement       0   Yes  "SLE_194"
   LON1    1.00000000000000E+0
   LON2    1.00000000000000E+0
   LON4    1.00000000000000E+0
   LON6    7.00000000000000E-1
   LON11    1.00000000000000E+0

NonLinearIncrement       0   Yes  "SLE_195"
   LON1    1.00000000000000E+0
   LON2    1.00000000000000E+0
   LON3    1.00000000000000E+0
   LON6    7.00000000000000E-1
   LON12    1.00000000000000E+0

NonLinearIncrement       0   Yes  "SLE_196"
   LON1    1.00000000000000E+0
   LON2    1.00000000000000E+0
   LON4    1.00000000000000E+0
   LON6    7.00000000000000E-1
   LON12    1.00000000000000E+0

NonLinearIncrement       0   Yes  "SLE_197"
   LON1    1.00000000000000E+0
   LON2    1.00000000000000E+0
   LON3    1.00000000000000E+0
   LON7    6.00000000000000E-1
   LON11    1.00000000000000E+0

NonLinearIncrement       0   Yes  "SLE_198"
   LON1    1.00000000000000E+0
   LON2    1.00000000000000E+0
   LON4    1.00000000000000E+0
   LON7    6.00000000000000E-1
   LON11    1.00000000000000E+0

NonLinearIncrement       0   Yes  "SLE_199"
   LON1    1.00000000000000E+0
   LON2    1.00000000000000E+0
   LON3    1.00000000000000E+0
   LON9    6.00000000000000E-1
   LON11    1.00000000000000E+0
```

```
NonLinearIncrement       0   Yes  "SLE_200"
   LON1    1.00000000000000E+0
   LON2    1.00000000000000E+0
   LON4    1.00000000000000E+0
   LON9    6.00000000000000E-1
   LON11    1.00000000000000E+0

NonLinearIncrement       0   Yes  "SLE_201"
   LON1    1.00000000000000E+0
   LON2    1.00000000000000E+0
   LON3    1.00000000000000E+0
   LON7    6.00000000000000E-1
   LON12    1.00000000000000E+0

NonLinearIncrement       0   Yes  "SLE_202"
   LON1    1.00000000000000E+0
   LON2    1.00000000000000E+0
   LON4    1.00000000000000E+0
   LON7    6.00000000000000E-1
   LON12    1.00000000000000E+0

NonLinearIncrement       0   Yes  "SLE_203"
   LON1    1.00000000000000E+0
   LON2    1.00000000000000E+0
   LON3    1.00000000000000E+0
   LON9    6.00000000000000E-1
   LON12    1.00000000000000E+0

NonLinearIncrement       0   Yes  "SLE_204"
   LON1    1.00000000000000E+0
   LON2    1.00000000000000E+0
   LON4    1.00000000000000E+0
   LON9    6.00000000000000E-1
   LON12    1.00000000000000E+0

NonLinearIncrement       0   Yes  "SLE_205"
   LON1    1.00000000000000E+0
   LON2    1.00000000000000E+0
   LON3    1.00000000000000E+0
   LON8    8.00000000000000E-1
   LON11    1.00000000000000E+0

NonLinearIncrement       0   Yes  "SLE_206"
   LON1    1.00000000000000E+0
   LON2    1.00000000000000E+0
   LON4    1.00000000000000E+0
   LON8    8.00000000000000E-1
   LON11    1.00000000000000E+0

NonLinearIncrement       0   Yes  "SLE_207"
   LON1    1.00000000000000E+0
   LON2    1.00000000000000E+0
   LON3    1.00000000000000E+0
```

```
   LON8    8.00000000000000E-1
   LON11    1.00000000000000E+0

NonLinearIncrement       0   Yes  "SLE_208"
   LON1    1.00000000000000E+0
   LON2    1.00000000000000E+0
   LON4    1.00000000000000E+0
   LON8    8.00000000000000E-1
   LON11    1.00000000000000E+0

NonLinearIncrement       0   Yes  "SLE_209"
   LON1    1.00000000000000E+0
   LON2    1.00000000000000E+0
   LON3    1.00000000000000E+0
   LON10    8.00000000000000E-1
   LON12    1.00000000000000E+0

NonLinearIncrement       0   Yes  "SLE_210"
   LON1    1.00000000000000E+0
   LON2    1.00000000000000E+0
   LON4    1.00000000000000E+0
   LON10    8.00000000000000E-1
   LON12    1.00000000000000E+0

NonLinearIncrement       0   Yes  "SLE_211"
   LON1    1.00000000000000E+0
   LON2    1.00000000000000E+0
   LON3    1.00000000000000E+0
   LON10    8.00000000000000E-1
   LON12    1.00000000000000E+0

NonLinearIncrement       0   Yes  "SLE_212"
   LON1    1.00000000000000E+0
   LON2    1.00000000000000E+0
   LON4    1.00000000000000E+0
   LON10    8.00000000000000E-1
   LON12    1.00000000000000E+0

NonLinearIncrement       0   Yes  "SLE_213"
   LON1    1.00000000000000E+0
   LON2    1.00000000000000E+0
   LON3    1.00000000000000E+0
   LON6    7.00000000000000E-1
   LON7    6.00000000000000E-1
   LON11    1.00000000000000E+0

NonLinearIncrement       0   Yes  "SLE_214"
   LON1    1.00000000000000E+0
   LON2    1.00000000000000E+0
   LON4    1.00000000000000E+0
   LON6    7.00000000000000E-1
   LON7    6.00000000000000E-1
   LON11    1.00000000000000E+0
```

```
NonLinearIncrement       0   Yes  "SLE_215"
   LON1    1.00000000000000E+0
   LON2    1.00000000000000E+0
   LON3    1.00000000000000E+0
   LON6    7.00000000000000E-1
   LON9    6.00000000000000E-1
   LON11    1.00000000000000E+0

NonLinearIncrement       0   Yes  "SLE_216"
   LON1    1.00000000000000E+0
   LON2    1.00000000000000E+0
   LON4    1.00000000000000E+0
   LON6    7.00000000000000E-1
   LON9    6.00000000000000E-1
   LON11    1.00000000000000E+0

NonLinearIncrement       0   Yes  "SLE_217"
   LON1    1.00000000000000E+0
   LON2    1.00000000000000E+0
   LON3    1.00000000000000E+0
   LON6    7.00000000000000E-1
   LON7    6.00000000000000E-1
   LON12    1.00000000000000E+0

NonLinearIncrement       0   Yes  "SLE_218"
   LON1    1.00000000000000E+0
   LON2    1.00000000000000E+0
   LON4    1.00000000000000E+0
   LON6    7.00000000000000E-1
   LON7    6.00000000000000E-1
   LON12    1.00000000000000E+0

NonLinearIncrement       0   Yes  "SLE_219"
   LON1    1.00000000000000E+0
   LON2    1.00000000000000E+0
   LON3    1.00000000000000E+0
   LON6    7.00000000000000E-1
   LON9    6.00000000000000E-1
   LON12    1.00000000000000E+0

NonLinearIncrement       0   Yes  "SLE_220"
   LON1    1.00000000000000E+0
   LON2    1.00000000000000E+0
   LON4    1.00000000000000E+0
   LON6    7.00000000000000E-1
   LON9    6.00000000000000E-1
   LON12    1.00000000000000E+0

NonLinearIncrement       0   Yes  "SLE_221"
   LON1    1.00000000000000E+0
   LON2    1.00000000000000E+0
   LON3    1.00000000000000E+0
   LON6    7.00000000000000E-1
   LON8    8.00000000000000E-1
```

```
   LON11    1.00000000000000E+0

NonLinearIncrement       0   Yes  "SLE_222"
   LON1    1.00000000000000E+0
   LON2    1.00000000000000E+0
   LON4    1.00000000000000E+0
   LON6    7.00000000000000E-1
   LON8    8.00000000000000E-1
   LON11    1.00000000000000E+0

NonLinearIncrement       0   Yes  "SLE_223"
   LON1    1.00000000000000E+0
   LON2    1.00000000000000E+0
   LON3    1.00000000000000E+0
   LON6    7.00000000000000E-1
   LON8    8.00000000000000E-1
   LON11    1.00000000000000E+0

NonLinearIncrement       0   Yes  "SLE_224"
   LON1    1.00000000000000E+0
   LON2    1.00000000000000E+0
   LON4    1.00000000000000E+0
   LON6    7.00000000000000E-1
   LON8    8.00000000000000E-1
   LON11    1.00000000000000E+0

NonLinearIncrement       0   Yes  "SLE_225"
   LON1    1.00000000000000E+0
   LON2    1.00000000000000E+0
   LON3    1.00000000000000E+0
   LON6    7.00000000000000E-1
   LON10    8.00000000000000E-1
   LON12    1.00000000000000E+0

NonLinearIncrement       0   Yes  "SLE_226"
   LON1    1.00000000000000E+0
   LON2    1.00000000000000E+0
   LON4    1.00000000000000E+0
   LON6    7.00000000000000E-1
   LON10    8.00000000000000E-1
   LON12    1.00000000000000E+0

NonLinearIncrement       0   Yes  "SLE_227"
   LON1    1.00000000000000E+0
   LON2    1.00000000000000E+0
   LON3    1.00000000000000E+0
   LON6    7.00000000000000E-1
   LON10    8.00000000000000E-1
   LON12    1.00000000000000E+0

NonLinearIncrement       0   Yes  "SLE_228"
   LON1    1.00000000000000E+0
   LON2    1.00000000000000E+0
   LON4    1.00000000000000E+0
```

```
   LON6    7.00000000000000E-1
   LON10    8.00000000000000E-1
   LON12    1.00000000000000E+0

NonLinearIncrement       0   Yes  "SLE_229"
   LON1    1.00000000000000E+0
   LON2    1.00000000000000E+0
   LON3    1.00000000000000E+0
   LON7    6.00000000000000E-1
   LON8    8.00000000000000E-1
   LON11    1.00000000000000E+0

NonLinearIncrement       0   Yes  "SLE_230"
   LON1    1.00000000000000E+0
   LON2    1.00000000000000E+0
   LON4    1.00000000000000E+0
   LON7    6.00000000000000E-1
   LON8    8.00000000000000E-1
   LON11    1.00000000000000E+0

NonLinearIncrement       0   Yes  "SLE_231"
   LON1    1.00000000000000E+0
   LON2    1.00000000000000E+0
   LON3    1.00000000000000E+0
   LON9    6.00000000000000E-1
   LON8    8.00000000000000E-1
   LON11    1.00000000000000E+0

NonLinearIncrement       0   Yes  "SLE_232"
   LON1    1.00000000000000E+0
   LON2    1.00000000000000E+0
   LON4    1.00000000000000E+0
   LON9    6.00000000000000E-1
   LON8    8.00000000000000E-1
   LON11    1.00000000000000E+0

NonLinearIncrement       0   Yes  "SLE_233"
   LON1    1.00000000000000E+0
   LON2    1.00000000000000E+0
   LON3    1.00000000000000E+0
   LON7    6.00000000000000E-1
   LON8    8.00000000000000E-1
   LON12    1.00000000000000E+0

NonLinearIncrement       0   Yes  "SLE_234"
   LON1    1.00000000000000E+0
   LON2    1.00000000000000E+0
   LON4    1.00000000000000E+0
   LON7    6.00000000000000E-1
   LON8    8.00000000000000E-1
   LON12    1.00000000000000E+0

NonLinearIncrement       0   Yes  "SLE_235"
   LON1    1.00000000000000E+0
```

```
   LON2    1.00000000000000E+0
   LON3    1.00000000000000E+0
   LON9    6.00000000000000E-1
   LON8    8.00000000000000E-1
   LON12    1.00000000000000E+0

NonLinearIncrement       0   Yes  "SLE_236"
   LON1    1.00000000000000E+0
   LON2    1.00000000000000E+0
   LON4    1.00000000000000E+0
   LON9    6.00000000000000E-1
   LON8    8.00000000000000E-1
   LON12    1.00000000000000E+0

NonLinearIncrement       0   Yes  "SLE_237"
   LON1    1.00000000000000E+0
   LON2    1.00000000000000E+0
   LON3    1.00000000000000E+0
   LON7    6.00000000000000E-1
   LON10    8.00000000000000E-1
   LON11    1.00000000000000E+0

NonLinearIncrement       0   Yes  "SLE_238"
   LON1    1.00000000000000E+0
   LON2    1.00000000000000E+0
   LON4    1.00000000000000E+0
   LON7    6.00000000000000E-1
   LON10    8.00000000000000E-1
   LON11    1.00000000000000E+0

NonLinearIncrement       0   Yes  "SLE_239"
   LON1    1.00000000000000E+0
   LON2    1.00000000000000E+0
   LON3    1.00000000000000E+0
   LON9    6.00000000000000E-1
   LON10    8.00000000000000E-1
   LON11    1.00000000000000E+0

NonLinearIncrement       0   Yes  "SLE_240"
   LON1    1.00000000000000E+0
   LON2    1.00000000000000E+0
   LON4    1.00000000000000E+0
   LON9    6.00000000000000E-1
   LON10    8.00000000000000E-1
   LON11    1.00000000000000E+0

NonLinearIncrement       0   Yes  "SLE_241"
   LON1    1.00000000000000E+0
   LON2    1.00000000000000E+0
   LON3    1.00000000000000E+0
   LON7    6.00000000000000E-1
   LON10    8.00000000000000E-1
   LON12    1.00000000000000E+0
```

```
NonLinearIncrement       0   Yes  "SLE_242"
   LON1    1.00000000000000E+0
   LON2    1.00000000000000E+0
   LON4    1.00000000000000E+0
   LON7    6.00000000000000E-1
   LON10    8.00000000000000E-1
   LON12    1.00000000000000E+0

NonLinearIncrement       0   Yes  "SLE_243"
   LON1    1.00000000000000E+0
   LON2    1.00000000000000E+0
   LON3    1.00000000000000E+0
   LON9    6.00000000000000E-1
   LON10    8.00000000000000E-1
   LON12    1.00000000000000E+0

NonLinearIncrement       0   Yes  "SLE_244"
   LON1    1.00000000000000E+0
   LON2    1.00000000000000E+0
   LON4    1.00000000000000E+0
   LON9    6.00000000000000E-1
   LON10    8.00000000000000E-1
   LON12    1.00000000000000E+0

NonLinearIncrement       0   Yes  "SLE_245"
   LON1    1.00000000000000E+0
   LON2    1.00000000000000E+0
   LON3    1.00000000000000E+0
   LON6    7.00000000000000E-1
   LON7    6.00000000000000E-1
   LON8    8.00000000000000E-1
   LON11    1.00000000000000E+0

NonLinearIncrement       0   Yes  "SLE_246"
   LON1    1.00000000000000E+0
   LON2    1.00000000000000E+0
   LON4    1.00000000000000E+0
   LON6    7.00000000000000E-1
   LON7    6.00000000000000E-1
   LON8    8.00000000000000E-1
   LON11    1.00000000000000E+0

NonLinearIncrement       0   Yes  "SLE_247"
   LON1    1.00000000000000E+0
   LON2    1.00000000000000E+0
   LON3    1.00000000000000E+0
   LON6    7.00000000000000E-1
   LON9    6.00000000000000E-1
   LON8    8.00000000000000E-1
   LON11    1.00000000000000E+0

NonLinearIncrement       0   Yes  "SLE_248"
   LON1    1.00000000000000E+0
   LON2    1.00000000000000E+0
```

```
   LON4    1.00000000000000E+0
   LON6    7.00000000000000E-1
   LON9    6.00000000000000E-1
   LON8    8.00000000000000E-1
   LON11    1.00000000000000E+0

NonLinearIncrement       0   Yes  "SLE_249"
   LON1    1.00000000000000E+0
   LON2    1.00000000000000E+0
   LON3    1.00000000000000E+0
   LON6    7.00000000000000E-1
   LON7    6.00000000000000E-1
   LON8    8.00000000000000E-1
   LON12    1.00000000000000E+0

NonLinearIncrement       0   Yes  "SLE_250"
   LON1    1.00000000000000E+0
   LON2    1.00000000000000E+0
   LON4    1.00000000000000E+0
   LON6    7.00000000000000E-1
   LON7    6.00000000000000E-1
   LON8    8.00000000000000E-1
   LON12    1.00000000000000E+0

NonLinearIncrement       0   Yes  "SLE_251"
   LON1    1.00000000000000E+0
   LON2    1.00000000000000E+0
   LON3    1.00000000000000E+0
   LON6    7.00000000000000E-1
   LON9    6.00000000000000E-1
   LON8    8.00000000000000E-1
   LON12    1.00000000000000E+0

NonLinearIncrement       0   Yes  "SLE_252"
   LON1    1.00000000000000E+0
   LON2    1.00000000000000E+0
   LON4    1.00000000000000E+0
   LON6    7.00000000000000E-1
   LON9    6.00000000000000E-1
   LON8    8.00000000000000E-1
   LON12    1.00000000000000E+0

NonLinearIncrement       0   Yes  "SLE_253"
   LON1    1.00000000000000E+0
   LON2    1.00000000000000E+0
   LON3    1.00000000000000E+0
   LON6    7.00000000000000E-1
   LON7    6.00000000000000E-1
   LON10    8.00000000000000E-1
   LON11    1.00000000000000E+0

NonLinearIncrement       0   Yes  "SLE_254"
   LON1    1.00000000000000E+0
   LON2    1.00000000000000E+0
```

```
   LON4    1.00000000000000E+0
   LON6    7.00000000000000E-1
   LON7    6.00000000000000E-1
   LON10    8.00000000000000E-1
   LON11    1.00000000000000E+0

NonLinearIncrement       0   Yes  "SLE_255"
   LON1    1.00000000000000E+0
   LON2    1.00000000000000E+0
   LON3    1.00000000000000E+0
   LON6    7.00000000000000E-1
   LON9    6.00000000000000E-1
   LON10    8.00000000000000E-1
   LON11    1.00000000000000E+0

NonLinearIncrement       0   Yes  "SLE_256"
   LON1    1.00000000000000E+0
   LON2    1.00000000000000E+0
   LON4    1.00000000000000E+0
   LON6    7.00000000000000E-1
   LON9    6.00000000000000E-1
   LON10    8.00000000000000E-1
   LON11    1.00000000000000E+0

NonLinearIncrement       0   Yes  "SLE_257"
   LON1    1.00000000000000E+0
   LON2    1.00000000000000E+0
   LON3    1.00000000000000E+0
   LON6    7.00000000000000E-1
   LON7    6.00000000000000E-1
   LON10    8.00000000000000E-1
   LON12    1.00000000000000E+0

NonLinearIncrement       0   Yes  "SLE_258"
   LON1    1.00000000000000E+0
   LON2    1.00000000000000E+0
   LON4    1.00000000000000E+0
   LON6    7.00000000000000E-1
   LON7    6.00000000000000E-1
   LON10    8.00000000000000E-1
   LON12    1.00000000000000E+0

NonLinearIncrement       0   Yes  "SLE_259"
   LON1    1.00000000000000E+0
   LON2    1.00000000000000E+0
   LON3    1.00000000000000E+0
   LON6    7.00000000000000E-1
   LON9    6.00000000000000E-1
   LON10    8.00000000000000E-1
   LON12    1.00000000000000E+0

NonLinearIncrement       0   Yes  "SLE_260"
   LON1    1.00000000000000E+0
   LON2    1.00000000000000E+0
```

```
      LON4    1.00000000000000E+0
      LON6    7.00000000000000E-1
      LON9    6.00000000000000E-1
      LON10    8.00000000000000E-1
      LON12    1.00000000000000E+0

   NonLinearStage       Unstaged


/ ____________________________________________________________________________
/ NATURAL FREQUENCY SOLVER DATA

   FreqNumModes            30

   FreqShift              0.00000000000000E+0

   FreqIncludeNSMass        1       2       3       4
   FreqModeParticipation   FALSE
    0.00000000000000E+0      0.00000000000000E+0      0.00000000000000E+0
    0.00000000000000E+0      0.00000000000000E+0      0.00000000000000E+0
    0.00000000000000E+0      0.00000000000000E+0      0.00000000000000E+0


/ ____________________________________________________________________________
/ HEAT SOLVER DATA

   LoadSetHeat              1       2       3       4       5       6       7
   9
      8      10      11      12

   HeatTempLoadCase         1

   HeatNonlinear        FALSE


/ ____________________________________________________________________________
/ GENERAL SOLVER DATA

   SolverTempDependence   None

   SolverLoadCaseTempDependence       0

   SolverActiveStage        0

   SturmCheck           FALSE

   SolverFreedomCase        1

   ModalLoadType        BaseAcceleration

   ModalNodeReactType   Element

   DampingType          Rayleigh
```

```
   RayleighFactors      Frequency
    1.00000000000000E+0      1.00000000000000E+1      1.00000000000000E+0
1.00000000000000E+1      1.00000000000000E-2      1.00000000000000E-2

   NonLinearGeometry    FALSE

   NonLinearMaterial    FALSE

   IncludeCreep         FALSE


   SolverDefaultsGeneral
     SolDefMatrixZeroDiag     1.00000000000000E-20
     SolDefConjGradTol      1.00000000000000E-5
     SolDefMaxConjGradIter    5000
     SolDefMaxNumWarnings      10
     SolDefWindowState        3
     SolDefReducedLogFile   TRUE
     SolDefDoResidualsCheck   FALSE
     SolDefSuppressAllSingularities   FALSE

   SolverDefaultsElements
     SolDefMinDimension     1.00000000000000E-9
     SolDefMinInternalAngle     1.50000000000000E+1
     SolDefZeroPointForce     1.00000000000000E-6
     SolDefZeroDiagonal     1.00000000000000E-20
     SolDefBeamMass       Lumped
     SolDefPlateMass      Lumped
     SolDefBrickMass      Lumped
     SolDefBeamLoads      Consistent
     SolDefPlateLoads     Consistent
     SolDefBeamSlices         5
     SolDefIncludeLinkReactions   TRUE

   SolverDefaultsDrilling
     SolDefZeroTrans        1.00000000000000E-8
     SolDefZeroRot          1.00000000000000E-6
     SolDrillStiffMult      1.00000000000000E-4
     SolDrillZeroEig        1.00000000000000E-6
     SolDefMaxNormalsAngle     5.00000000000000E+0
     SolDefForceDrillingCheck   FALSE

   SolverDefaultsIteration
     SolDefZeroDisp         1.00000000000000E-8
     SolDefDispNormTol      1.00000000000000E-4
     SolDefResidualsNormTol     1.00000000000000E-3
     SolDefNonlinIterLimit      20
     SolDefAddIterations   TRUE
     SolDefMaxUpdateInterval       5
     SolDefMaxDispChange     1.00000000000000E+0
     SolDefMaxResidualChange     1.00000000000000E-1
     SolDefFormStiffnessMatrix       0
     SolDefFormHeatStiffnessMatrix       2
     SolDefHeatConvergenceTol     1.00000000000000E-5
```

```
  SolDefHeatRelaxationFactor     6.66670000000000E-1
  SolDefNonlinHeatIterLimit      20

SolverDefaultsSubSteps
  SolDefSubStepping        0
  SolDefMinLoadReductionFactor     1.00000000000000E-1
  SolDefMaxRot           3.00000000000000E+1
  SolDefMaxDispRatio     1.00000000000000E-1
  SolDefMinArcLength     1.00000000000000E-3
  SolDefMaxFibreInc      1.00000000000000E-2
  SolDefSaveSubIncrements   FALSE
  SolDefDynamicAutoSteppingMode       0
  SolDefMinTimeStep      1.00000000000000E-3
  SolDefConsiderTableSteps  FALSE
  SolDefSingleShotRestart  FALSE
  SolDefAutoAssignPathDiv  FALSE

SolverDefaultsNonlinear
  SolDefIncludeKG      TRUE
  SolDefAutoScaleKg   TRUE
  SolDefIgnoreCompressiveBeamKg  FALSE
  SolDefBeamKgType     Simplified
  SolDefFiniteStrainDefinition   Nominal
  SolDefBeamLength     Initial
  SolDefRatioMNL         5.00000000000000E-1
  SolDefZeroContactFactor     1.00000000000000E-6
  SolDefSlidingFriction     1.00000000000000E-15
  SolDefStickingFriction     1.00000000000000E+0
  SolDefFrictionCutoffStrain     1.00000000000000E-5
  SolDefScaleSupports  TRUE

SolverDefaultsCreep
  SolDefTimeStepParam     5.00000000000000E-1
  SolDefMinViscoUnits       3
  SolDefMaxViscoUnits       6
  SolDefCurveFitTime     1.00000000000000E+4
  SolDefCurveFitTimeUnit   d
  SolDefSpacingBias      5.00000000000000E-1
  SolDefDoInstantNTA  TRUE

SolverDefaultsEigenvalue
  SolDefZeroFreq         1.00000000000000E-6
  SolDefZeroBuckEigenvalue     1.00000000000000E-10
  SolDefExpandWorkingSetBy       6
  SolDefEigIterLimit     200
  SolDefEigIterTol       1.00000000000000E-5
  SolDefEigAutoShift  FALSE

SolverDefaultsDynamics
  SolDefWilsonTheta      1.37000000000000E+0
  SolDefNewmarkBeta      5.00000000000000E-1
  SolDefTransientMethod   Newmark
  SolDefExcludeMassComponents   X
  SolDefIncludeRotMass   TRUE
```

```
/ ____________________________________________________________________________
/ RESULT OPTIONS

   ResultOptions
     ResOptsRotationUnit   Degrees
     ResOptsHRADisplacement   Total
     ResOptsHRAVelocity   Total
     ResOptsHRAAcceleration   Relative
     ResOptsBeamForceMoment   Principal
     ResOptsStageDisplacement   BirthStage
```

```
/ ____________________________________________________________________________
/ Straus7 MODEL EXCHANGE FILE
/ TIMESTAMP: 9:39:03 am, 15 March 2023

/ ____________________________________________________________________________
/ MODEL INFORMATION

   FileFormat           Straus7.2.4.6
   ModelName            "Modello_Passerella_R12"
   Title                ""
   Project              ""
   Author               ""
   Reference            ""
   Comments             ""

/ ____________________________________________________________________________
/ UNITS

   LengthUnit           m
   MassUnit             kg
   EnergyUnit           J
   PressureUnit         MPa
   ForceUnit            kN
   TemperatureUnit      C

/ ____________________________________________________________________________
/ GROUP DEFINITIONS

   Group                    1    16711680   "\\Model"
   Group                    2     3355647   "Travi_Principali"
   Group                    3    16724812   "Travi_Principali\DX_1"
   Group                    4    16777011   "Travi_Principali\DX_2"
   Group                    5     8401919   "Travi_Principali\SX_1"
   Group                    6    13382655   "Travi_Principali\SX_2"
   Group                    7    11730739   "Traversi"
   Group                    8     3407692   "Montanti"
   Group                    9    16757299   "Travi copertura"
   Group                   10     6750003   "UPN300"
   Group                   17     3407769   "PBR"
   Group                   11    16777011   "MODELING"
   Group                   12    15085194   "MODELING\RLxyz"
   Group                   13     8401919   "MODELING\LOAD_PATCH"
   Group                   14     3407769   "MODELING\LOAD_PATCH\Centrali"
   Group                   15    15096878   "MODELING\LOAD_PATCH\Interno"
   Group                   16     3026662   "MODELING\LOAD_PATCH\Esterno"
   Group                   18     3026662   "MODELING\CONDENSAZIONE"
   Group                   19     3073605   "MODELING\CONDENSAZIONE\RL-offset
trave"
   Group                   20     3073743   "MODELING\CONDENSAZIONE\FICT
BAGGIOLI"
   Group                   21    15114542
"MODELING\CONDENSAZIONE\RL-condensazione"
   Group                   22    15085263   "MODELING\CONDENSAZIONE\FICT-FOND"
   Group                   26     7548646
```

```
"MODELING\CONDENSAZIONE\FICT-FOND\BA-01"
   Group                   25    15085125
"MODELING\CONDENSAZIONE\FICT-FOND\BA-02"
   Group                   24     3044326
"MODELING\CONDENSAZIONE\FICT-FOND\BA-03"
   Group                   23     6088238
"MODELING\CONDENSAZIONE\FICT-FOND\BA-04"
   Group                   27    10610222   "MODELING\Fict bracing"

/ ____________________________________________________________________________
/ FREEDOM CASE DEFINITIONS

   FreedomCase              1       0       1   "-"


/ ____________________________________________________________________________
/ LOAD CASE DEFINITIONS

   LoadCase                 1       1   "G00 - Peso Proprio"
     Gravity                3    -9.81000000000000E+0
     LCInclude              1

   LoadCase                 2       1   "G01 - Carico Permanente soletta"
     Gravity                3    -9.81000000000000E+0
     LCInclude              2

   LoadCase                 3       1   "G02a - Carico Pannelli Fonoassorbenti"
     Gravity                3    -9.81000000000000E+0
     LCInclude              2

   LoadCase                 4       1   "G02b - Carico Pannelli Fonoassorbenti
DX"
     Gravity                3    -9.81000000000000E+0
     LCInclude              2

   LoadCase                 5       1   "Q00 - Sovraccarico Accidentale"
     Gravity                3    -9.81000000000000E+0
     LCInclude              2

   LoadCase                 6       0   "Q01 - Carico Neve"
     LCInclude              3

   LoadCase                 7       0   "Q02a - Carico Vento Y+"
     LCInclude              3

   LoadCase                 9       0   "Q02b - Carico Vento Y-"
     LCInclude              3

   LoadCase                 8       0   "Q03a - Effetti Aerodinamici Convogli
Y+"
     LCInclude              3

   LoadCase                10       0   "Q03b - Effetti Aerodinamici Convogli
Y-"
```

```
    LCInclude              3

  LoadCase                11       0   "T00 - DTu = +25°C"
    LCInclude              3

  LoadCase                12       0   "T01 - DTu = -25°C"
    LCInclude              3


/ ____________________________________________________________________________
/ LOAD CASE COMBINATIONS

  LoadCaseCombination      13   "SLU_000"
     1    1    1.35000000000000E+0
     2    1    1.35000000000000E+0
     3    1    1.50000000000000E+0

  LoadCaseCombination      14   "SLU_001"
     1    1    1.35000000000000E+0
     2    1    1.35000000000000E+0
     4    1    1.50000000000000E+0

  LoadCaseCombination      15   "SLU_01"
     1    1    1.35000000000000E+0
     2    1    1.35000000000000E+0
     3    1    1.50000000000000E+0
     5    1    1.50000000000000E+0

  LoadCaseCombination      16   "SLU_02"
     1    1    1.35000000000000E+0
     2    1    1.35000000000000E+0
     4    1    1.50000000000000E+0
     5    1    1.50000000000000E+0

  LoadCaseCombination      17   "SLU_03"
     1    1    1.35000000000000E+0
     2    1    1.35000000000000E+0
     3    1    1.50000000000000E+0
     6    1    1.50000000000000E+0

  LoadCaseCombination      18   "SLU_04"
     1    1    1.35000000000000E+0
     2    1    1.35000000000000E+0
     4    1    1.50000000000000E+0
     6    1    1.50000000000000E+0

  LoadCaseCombination      19   "SLU_05"
     1    1    1.35000000000000E+0
     2    1    1.35000000000000E+0
     3    1    1.50000000000000E+0
     7    1    1.50000000000000E+0

  LoadCaseCombination      20   "SLU_06"
     1    1    1.35000000000000E+0
```

```
   2    1    1.35000000000000E+0
   4    1    1.50000000000000E+0
   7    1    1.50000000000000E+0

LoadCaseCombination      21   "SLU_07"
   1    1    1.35000000000000E+0
   2    1    1.35000000000000E+0
   3    1    1.50000000000000E+0
   9    1    1.50000000000000E+0

LoadCaseCombination      22   "SLU_08"
   1    1    1.35000000000000E+0
   2    1    1.35000000000000E+0
   4    1    1.50000000000000E+0
   9    1    1.50000000000000E+0

LoadCaseCombination      23   "SLU_09"
   1    1    1.35000000000000E+0
   2    1    1.35000000000000E+0
   3    1    1.50000000000000E+0
   8    1    1.45000000000000E+0

LoadCaseCombination      24   "SLU_10"
   1    1    1.35000000000000E+0
   2    1    1.35000000000000E+0
   4    1    1.50000000000000E+0
   8    1    1.45000000000000E+0

LoadCaseCombination      25   "SLU_11"
   1    1    1.35000000000000E+0
   2    1    1.35000000000000E+0
   3    1    1.50000000000000E+0
   10    1    1.45000000000000E+0

LoadCaseCombination      26   "SLU_12"
   1    1    1.35000000000000E+0
   2    1    1.35000000000000E+0
   4    1    1.50000000000000E+0
   10    1    1.45000000000000E+0

LoadCaseCombination      27   "SLU_13"
   1    1    1.35000000000000E+0
   2    1    1.35000000000000E+0
   3    1    1.50000000000000E+0
   11    1    1.50000000000000E+0

LoadCaseCombination      28   "SLU_14"
   1    1    1.35000000000000E+0
   2    1    1.35000000000000E+0
   4    1    1.50000000000000E+0
   11    1    1.50000000000000E+0

LoadCaseCombination      29   "SLU_15"
   1    1    1.35000000000000E+0
```

```
   2    1    1.35000000000000E+0
   3    1    1.50000000000000E+0
   12    1    1.50000000000000E+0

LoadCaseCombination      30   "SLU_16"
   1    1    1.35000000000000E+0
   2    1    1.35000000000000E+0
   4    1    1.50000000000000E+0
   12    1    1.50000000000000E+0

LoadCaseCombination      31   "SLU_17"
   1    1    1.35000000000000E+0
   2    1    1.35000000000000E+0
   3    1    1.50000000000000E+0
   5    1    1.50000000000000E+0
   7    1    9.00000000000000E-1

LoadCaseCombination      32   "SLU_18"
   1    1    1.35000000000000E+0
   2    1    1.35000000000000E+0
   4    1    1.50000000000000E+0
   5    1    1.50000000000000E+0
   7    1    9.00000000000000E-1

LoadCaseCombination      33   "SLU_19"
   1    1    1.35000000000000E+0
   2    1    1.35000000000000E+0
   3    1    1.50000000000000E+0
   5    1    1.50000000000000E+0
   9    1    9.00000000000000E-1

LoadCaseCombination      34   "SLU_20"
   1    1    1.35000000000000E+0
   2    1    1.35000000000000E+0
   4    1    1.50000000000000E+0
   5    1    1.50000000000000E+0
   9    1    9.00000000000000E-1

LoadCaseCombination      35   "SLU_21"
   1    1    1.35000000000000E+0
   2    1    1.35000000000000E+0
   3    1    1.50000000000000E+0
   5    1    1.50000000000000E+0
   11    1    9.00000000000000E-1

LoadCaseCombination      36   "SLU_22"
   1    1    1.35000000000000E+0
   2    1    1.35000000000000E+0
   4    1    1.50000000000000E+0
   5    1    1.50000000000000E+0
   11    1    9.00000000000000E-1

LoadCaseCombination      37   "SLU_23"
   1    1    1.35000000000000E+0
```

```
   2    1    1.35000000000000E+0
   3    1    1.50000000000000E+0
   5    1    1.50000000000000E+0
   12    1    9.00000000000000E-1

LoadCaseCombination      38   "SLU_24"
   1    1    1.35000000000000E+0
   2    1    1.35000000000000E+0
   4    1    1.50000000000000E+0
   5    1    1.50000000000000E+0
   12    1    9.00000000000000E-1

LoadCaseCombination      39   "SLU_25"
   1    1    1.35000000000000E+0
   2    1    1.35000000000000E+0
   3    1    1.50000000000000E+0
   5    1    1.50000000000000E+0
   7    1    9.00000000000000E-1
   11    1    9.00000000000000E-1

LoadCaseCombination      40   "SLU_26"
   1    1    1.35000000000000E+0
   2    1    1.35000000000000E+0
   4    1    1.50000000000000E+0
   5    1    1.50000000000000E+0
   7    1    9.00000000000000E-1
   11    1    9.00000000000000E-1

LoadCaseCombination      41   "SLU_27"
   1    1    1.35000000000000E+0
   2    1    1.35000000000000E+0
   3    1    1.50000000000000E+0
   5    1    1.50000000000000E+0
   9    1    9.00000000000000E-1
   12    1    9.00000000000000E-1

LoadCaseCombination      42   "SLU_28"
   1    1    1.35000000000000E+0
   2    1    1.35000000000000E+0
   4    1    1.50000000000000E+0
   5    1    1.50000000000000E+0
   9    1    9.00000000000000E-1
   12    1    9.00000000000000E-1

LoadCaseCombination      43   "SLU_29"
   1    1    1.35000000000000E+0
   2    1    1.35000000000000E+0
   3    1    1.50000000000000E+0
   6    1    1.50000000000000E+0
   7    1    9.00000000000000E-1

LoadCaseCombination      44   "SLU_30"
   1    1    1.35000000000000E+0
   2    1    1.35000000000000E+0
```

```
   4    1    1.50000000000000E+0
   6    1    1.50000000000000E+0
   7    1    9.00000000000000E-1

LoadCaseCombination      45   "SLU_31"
   1    1    1.35000000000000E+0
   2    1    1.35000000000000E+0
   3    1    1.50000000000000E+0
   6    1    1.50000000000000E+0
   9    1    9.00000000000000E-1

LoadCaseCombination      46   "SLU_32"
   1    1    1.35000000000000E+0
   2    1    1.35000000000000E+0
   4    1    1.50000000000000E+0
   6    1    1.50000000000000E+0
   9    1    9.00000000000000E-1

LoadCaseCombination      47   "SLU_33"
   1    1    1.35000000000000E+0
   2    1    1.35000000000000E+0
   3    1    1.50000000000000E+0
   6    1    1.50000000000000E+0
   8    1    1.16000000000000E+0

LoadCaseCombination      48   "SLU_34"
   1    1    1.35000000000000E+0
   2    1    1.35000000000000E+0
   4    1    1.50000000000000E+0
   6    1    1.50000000000000E+0
   8    1    1.16000000000000E+0

LoadCaseCombination      49   "SLU_35"
   1    1    1.35000000000000E+0
   2    1    1.35000000000000E+0
   3    1    1.50000000000000E+0
   6    1    1.50000000000000E+0
   10    1    1.16000000000000E+0

LoadCaseCombination      50   "SLU_36"
   1    1    1.35000000000000E+0
   2    1    1.35000000000000E+0
   4    1    1.50000000000000E+0
   6    1    1.50000000000000E+0
   10    1    1.16000000000000E+0

LoadCaseCombination      51   "SLU_37"
   1    1    1.35000000000000E+0
   2    1    1.35000000000000E+0
   3    1    1.50000000000000E+0
   6    1    1.50000000000000E+0
   11    1    9.00000000000000E-1

LoadCaseCombination      52   "SLU_38"
```

```
   1    1    1.35000000000000E+0
   2    1    1.35000000000000E+0
   4    1    1.50000000000000E+0
   6    1    1.50000000000000E+0
   11    1    9.00000000000000E-1

LoadCaseCombination      53   "SLU_39"
   1    1    1.35000000000000E+0
   2    1    1.35000000000000E+0
   3    1    1.50000000000000E+0
   6    1    1.50000000000000E+0
   12    1    9.00000000000000E-1

LoadCaseCombination      54   "SLU_40"
   1    1    1.35000000000000E+0
   2    1    1.35000000000000E+0
   4    1    1.50000000000000E+0
   6    1    1.50000000000000E+0
   12    1    9.00000000000000E-1

LoadCaseCombination      55   "SLU_41"
   1    1    1.35000000000000E+0
   2    1    1.35000000000000E+0
   3    1    1.50000000000000E+0
   6    1    1.50000000000000E+0
   7    1    9.00000000000000E-1
   8    1    1.16000000000000E+0

LoadCaseCombination      56   "SLU_42"
   1    1    1.35000000000000E+0
   2    1    1.35000000000000E+0
   4    1    1.50000000000000E+0
   6    1    1.50000000000000E+0
   7    1    9.00000000000000E-1
   8    1    1.16000000000000E+0

LoadCaseCombination      57   "SLU_43"
   1    1    1.35000000000000E+0
   2    1    1.35000000000000E+0
   3    1    1.50000000000000E+0
   6    1    1.50000000000000E+0
   9    1    9.00000000000000E-1
   10    1    1.16000000000000E+0

LoadCaseCombination      58   "SLU_44"
   1    1    1.35000000000000E+0
   2    1    1.35000000000000E+0
   4    1    1.50000000000000E+0
   6    1    1.50000000000000E+0
   9    1    9.00000000000000E-1
   10    1    1.16000000000000E+0

LoadCaseCombination      59   "SLU_45"
   1    1    1.35000000000000E+0
```

```
   2    1    1.35000000000000E+0
   3    1    1.50000000000000E+0
   6    1    1.50000000000000E+0
   7    1    9.00000000000000E-1
   11    1    9.00000000000000E-1

LoadCaseCombination      60   "SLU_46"
   1    1    1.35000000000000E+0
   2    1    1.35000000000000E+0
   4    1    1.50000000000000E+0
   6    1    1.50000000000000E+0
   7    1    9.00000000000000E-1
   11    1    9.00000000000000E-1

LoadCaseCombination      61   "SLU_47"
   1    1    1.35000000000000E+0
   2    1    1.35000000000000E+0
   3    1    1.50000000000000E+0
   6    1    1.50000000000000E+0
   9    1    9.00000000000000E-1
   12    1    9.00000000000000E-1

LoadCaseCombination      62   "SLU_48"
   1    1    1.35000000000000E+0
   2    1    1.35000000000000E+0
   4    1    1.50000000000000E+0
   6    1    1.50000000000000E+0
   9    1    9.00000000000000E-1
   12    1    9.00000000000000E-1

LoadCaseCombination      63   "SLU_49"
   1    1    1.35000000000000E+0
   2    1    1.35000000000000E+0
   3    1    1.50000000000000E+0
   6    1    1.50000000000000E+0
   8    1    1.16000000000000E+0
   11    1    9.00000000000000E-1

LoadCaseCombination      64   "SLU_50"
   1    1    1.35000000000000E+0
   2    1    1.35000000000000E+0
   4    1    1.50000000000000E+0
   6    1    1.50000000000000E+0
   8    1    1.16000000000000E+0
   11    1    9.00000000000000E-1

LoadCaseCombination      65   "SLU_51"
   1    1    1.35000000000000E+0
   2    1    1.35000000000000E+0
   3    1    1.50000000000000E+0
   6    1    1.50000000000000E+0
   10    1    1.16000000000000E+0
   12    1    9.00000000000000E-1
```

```
LoadCaseCombination      66   "SLU_52"
   1    1    1.35000000000000E+0
   2    1    1.35000000000000E+0
   4    1    1.50000000000000E+0
   6    1    1.50000000000000E+0
   10    1    1.16000000000000E+0
   12    1    9.00000000000000E-1

LoadCaseCombination      67   "SLU_53"
   1    1    1.35000000000000E+0
   2    1    1.35000000000000E+0
   3    1    1.50000000000000E+0
   6    1    1.50000000000000E+0
   7    1    9.00000000000000E-1
   8    1    1.16000000000000E+0
   11    1    9.00000000000000E-1

LoadCaseCombination      68   "SLU_54"
   1    1    1.35000000000000E+0
   2    1    1.35000000000000E+0
   4    1    1.50000000000000E+0
   6    1    1.50000000000000E+0
   7    1    9.00000000000000E-1
   8    1    1.16000000000000E+0
   11    1    9.00000000000000E-1

LoadCaseCombination      69   "SLU_55"
   1    1    1.35000000000000E+0
   2    1    1.35000000000000E+0
   3    1    1.50000000000000E+0
   6    1    1.50000000000000E+0
   9    1    9.00000000000000E-1
   10    1    1.16000000000000E+0
   12    1    9.00000000000000E-1

LoadCaseCombination      70   "SLU_56"
   1    1    1.35000000000000E+0
   2    1    1.35000000000000E+0
   4    1    1.50000000000000E+0
   6    1    1.50000000000000E+0
   9    1    9.00000000000000E-1
   10    1    1.16000000000000E+0
   12    1    9.00000000000000E-1

LoadCaseCombination      71   "SLU_57"
   1    1    1.35000000000000E+0
   2    1    1.35000000000000E+0
   3    1    1.50000000000000E+0
   6    1    1.05000000000000E+0
   7    1    1.50000000000000E+0

LoadCaseCombination      72   "SLU_58"
   1    1    1.35000000000000E+0
   2    1    1.35000000000000E+0
```

```
   4    1    1.50000000000000E+0
   6    1    1.05000000000000E+0
   7    1    1.50000000000000E+0

LoadCaseCombination      73   "SLU_59"
   1    1    1.35000000000000E+0
   2    1    1.35000000000000E+0
   3    1    1.50000000000000E+0
   6    1    1.05000000000000E+0
   9    1    1.50000000000000E+0

LoadCaseCombination      74   "SLU_60"
   1    1    1.35000000000000E+0
   2    1    1.35000000000000E+0
   4    1    1.50000000000000E+0
   6    1    1.05000000000000E+0
   9    1    1.50000000000000E+0

LoadCaseCombination      75   "SLU_61"
   1    1    1.35000000000000E+0
   2    1    1.35000000000000E+0
   3    1    1.50000000000000E+0
   7    1    1.50000000000000E+0
   8    1    1.16000000000000E+0

LoadCaseCombination      76   "SLU_62"
   1    1    1.35000000000000E+0
   2    1    1.35000000000000E+0
   4    1    1.50000000000000E+0
   7    1    1.50000000000000E+0
   8    1    1.16000000000000E+0

LoadCaseCombination      77   "SLU_63"
   1    1    1.35000000000000E+0
   2    1    1.35000000000000E+0
   3    1    1.50000000000000E+0
   9    1    1.50000000000000E+0
   8    1    1.16000000000000E+0

LoadCaseCombination      78   "SLU_64"
   1    1    1.35000000000000E+0
   2    1    1.35000000000000E+0
   4    1    1.50000000000000E+0
   9    1    1.50000000000000E+0
   8    1    1.16000000000000E+0

LoadCaseCombination      79   "SLU_65"
   1    1    1.35000000000000E+0
   2    1    1.35000000000000E+0
   3    1    1.50000000000000E+0
   7    1    1.50000000000000E+0
   10    1    1.16000000000000E+0

LoadCaseCombination      80   "SLU_66"
```

```
   1    1    1.35000000000000E+0
   2    1    1.35000000000000E+0
   4    1    1.50000000000000E+0
   7    1    1.50000000000000E+0
   10    1    1.16000000000000E+0

LoadCaseCombination      81   "SLU_67"
   1    1    1.35000000000000E+0
   2    1    1.35000000000000E+0
   3    1    1.50000000000000E+0
   9    1    1.50000000000000E+0
   10    1    1.16000000000000E+0

LoadCaseCombination      82   "SLU_68"
   1    1    1.35000000000000E+0
   2    1    1.35000000000000E+0
   4    1    1.50000000000000E+0
   9    1    1.50000000000000E+0
   10    1    1.16000000000000E+0

LoadCaseCombination      83   "SLU_69"
   1    1    1.35000000000000E+0
   2    1    1.35000000000000E+0
   3    1    1.50000000000000E+0
   7    1    1.50000000000000E+0
   11    1    9.00000000000000E-1

LoadCaseCombination      84   "SLU_70"
   1    1    1.35000000000000E+0
   2    1    1.35000000000000E+0
   4    1    1.50000000000000E+0
   7    1    1.50000000000000E+0
   11    1    9.00000000000000E-1

LoadCaseCombination      85   "SLU_71"
   1    1    1.35000000000000E+0
   2    1    1.35000000000000E+0
   3    1    1.50000000000000E+0
   9    1    1.50000000000000E+0
   11    1    9.00000000000000E-1

LoadCaseCombination      86   "SLU_72"
   1    1    1.35000000000000E+0
   2    1    1.35000000000000E+0
   4    1    1.50000000000000E+0
   9    1    1.50000000000000E+0
   11    1    9.00000000000000E-1

LoadCaseCombination      87   "SLU_73"
   1    1    1.35000000000000E+0
   2    1    1.35000000000000E+0
   3    1    1.50000000000000E+0
   7    1    1.50000000000000E+0
   12    1    9.00000000000000E-1
```

```
LoadCaseCombination      88   "SLU_74"
   1    1    1.35000000000000E+0
   2    1    1.35000000000000E+0
   4    1    1.50000000000000E+0
   7    1    1.50000000000000E+0
   12    1    9.00000000000000E-1

LoadCaseCombination      89   "SLU_75"
   1    1    1.35000000000000E+0
   2    1    1.35000000000000E+0
   3    1    1.50000000000000E+0
   9    1    1.50000000000000E+0
   12    1    9.00000000000000E-1

LoadCaseCombination      90   "SLU_76"
   1    1    1.35000000000000E+0
   2    1    1.35000000000000E+0
   4    1    1.50000000000000E+0
   9    1    1.50000000000000E+0
   12    1    9.00000000000000E-1

LoadCaseCombination      91   "SLU_77"
   1    1    1.35000000000000E+0
   2    1    1.35000000000000E+0
   3    1    1.50000000000000E+0
   6    1    1.05000000000000E+0
   7    1    1.50000000000000E+0
   8    1    1.16000000000000E+0

LoadCaseCombination      92   "SLU_78"
   1    1    1.35000000000000E+0
   2    1    1.35000000000000E+0
   4    1    1.50000000000000E+0
   6    1    1.05000000000000E+0
   7    1    1.50000000000000E+0
   8    1    1.16000000000000E+0

LoadCaseCombination      93   "SLU_79"
   1    1    1.35000000000000E+0
   2    1    1.35000000000000E+0
   3    1    1.50000000000000E+0
   6    1    1.05000000000000E+0
   9    1    1.50000000000000E+0
   8    1    1.16000000000000E+0

LoadCaseCombination      94   "SLU_80"
   1    1    1.35000000000000E+0
   2    1    1.35000000000000E+0
   4    1    1.50000000000000E+0
   6    1    1.05000000000000E+0
   9    1    1.50000000000000E+0
   8    1    1.16000000000000E+0
```

```
LoadCaseCombination      95   "SLU_81"
   1    1    1.35000000000000E+0
   2    1    1.35000000000000E+0
   3    1    1.50000000000000E+0
   6    1    1.05000000000000E+0
   7    1    1.50000000000000E+0
   10    1    1.16000000000000E+0

LoadCaseCombination      96   "SLU_82"
   1    1    1.35000000000000E+0
   2    1    1.35000000000000E+0
   4    1    1.50000000000000E+0
   6    1    1.05000000000000E+0
   7    1    1.50000000000000E+0
   10    1    1.16000000000000E+0

LoadCaseCombination      97   "SLU_83"
   1    1    1.35000000000000E+0
   2    1    1.35000000000000E+0
   3    1    1.50000000000000E+0
   6    1    1.05000000000000E+0
   9    1    1.50000000000000E+0
   10    1    1.16000000000000E+0

LoadCaseCombination      98   "SLU_84"
   1    1    1.35000000000000E+0
   2    1    1.35000000000000E+0
   4    1    1.50000000000000E+0
   6    1    1.05000000000000E+0
   9    1    1.50000000000000E+0
   10    1    1.16000000000000E+0

LoadCaseCombination      99   "SLU_85"
   1    1    1.35000000000000E+0
   2    1    1.35000000000000E+0
   3    1    1.50000000000000E+0
   6    1    1.05000000000000E+0
   7    1    1.50000000000000E+0
   11    1    9.00000000000000E-1

LoadCaseCombination     100   "SLU_86"
   1    1    1.35000000000000E+0
   2    1    1.35000000000000E+0
   4    1    1.50000000000000E+0
   6    1    1.05000000000000E+0
   7    1    1.50000000000000E+0
   11    1    9.00000000000000E-1

LoadCaseCombination     101   "SLU_87"
   1    1    1.35000000000000E+0
   2    1    1.35000000000000E+0
   3    1    1.50000000000000E+0
   6    1    1.05000000000000E+0
   9    1    1.50000000000000E+0
```

```
   11    1    9.00000000000000E-1

LoadCaseCombination     102   "SLU_88"
   1    1    1.35000000000000E+0
   2    1    1.35000000000000E+0
   4    1    1.50000000000000E+0
   6    1    1.05000000000000E+0
   9    1    1.50000000000000E+0
   11    1    9.00000000000000E-1

LoadCaseCombination     103   "SLU_89"
   1    1    1.35000000000000E+0
   2    1    1.35000000000000E+0
   3    1    1.50000000000000E+0
   6    1    1.05000000000000E+0
   7    1    1.50000000000000E+0
   12    1    9.00000000000000E-1

LoadCaseCombination     104   "SLU_90"
   1    1    1.35000000000000E+0
   2    1    1.35000000000000E+0
   4    1    1.50000000000000E+0
   6    1    1.05000000000000E+0
   7    1    1.50000000000000E+0
   12    1    9.00000000000000E-1

LoadCaseCombination     105   "SLU_91"
   1    1    1.35000000000000E+0
   2    1    1.35000000000000E+0
   3    1    1.50000000000000E+0
   6    1    1.05000000000000E+0
   9    1    1.50000000000000E+0
   12    1    9.00000000000000E-1

LoadCaseCombination     106   "SLU_92"
   1    1    1.35000000000000E+0
   2    1    1.35000000000000E+0
   4    1    1.50000000000000E+0
   6    1    1.05000000000000E+0
   9    1    1.50000000000000E+0
   12    1    9.00000000000000E-1

LoadCaseCombination     107   "SLU_93"
   1    1    1.35000000000000E+0
   2    1    1.35000000000000E+0
   3    1    1.50000000000000E+0
   7    1    1.50000000000000E+0
   8    1    1.16000000000000E+0
   11    1    9.00000000000000E-1

LoadCaseCombination     108   "SLU_94"
   1    1    1.35000000000000E+0
   2    1    1.35000000000000E+0
   4    1    1.50000000000000E+0
```

```
   7    1    1.50000000000000E+0
   8    1    1.16000000000000E+0
   11    1    9.00000000000000E-1

LoadCaseCombination     109   "SLU_95"
   1    1    1.35000000000000E+0
   2    1    1.35000000000000E+0
   3    1    1.50000000000000E+0
   9    1    1.50000000000000E+0
   8    1    1.16000000000000E+0
   11    1    9.00000000000000E-1

LoadCaseCombination     110   "SLU_96"
   1    1    1.35000000000000E+0
   2    1    1.35000000000000E+0
   4    1    1.50000000000000E+0
   9    1    1.50000000000000E+0
   8    1    1.16000000000000E+0
   11    1    9.00000000000000E-1

LoadCaseCombination     111   "SLU_97"
   1    1    1.35000000000000E+0
   2    1    1.35000000000000E+0
   3    1    1.50000000000000E+0
   7    1    1.50000000000000E+0
   8    1    1.16000000000000E+0
   12    1    9.00000000000000E-1

LoadCaseCombination     112   "SLU_98"
   1    1    1.35000000000000E+0
   2    1    1.35000000000000E+0
   4    1    1.50000000000000E+0
   7    1    1.50000000000000E+0
   8    1    1.16000000000000E+0
   12    1    9.00000000000000E-1

LoadCaseCombination     113   "SLU_99"
   1    1    1.35000000000000E+0
   2    1    1.35000000000000E+0
   3    1    1.50000000000000E+0
   9    1    1.50000000000000E+0
   8    1    1.16000000000000E+0
   12    1    9.00000000000000E-1

LoadCaseCombination     114   "SLU_100"
   1    1    1.35000000000000E+0
   2    1    1.35000000000000E+0
   4    1    1.50000000000000E+0
   9    1    1.50000000000000E+0
   8    1    1.16000000000000E+0
   12    1    9.00000000000000E-1

LoadCaseCombination     115   "SLU_101"
   1    1    1.35000000000000E+0
```

```
   2    1    1.35000000000000E+0
   3    1    1.50000000000000E+0
   7    1    1.50000000000000E+0
   10    1    1.16000000000000E+0
   11    1    9.00000000000000E-1

LoadCaseCombination     116   "SLU_102"
   1    1    1.35000000000000E+0
   2    1    1.35000000000000E+0
   4    1    1.50000000000000E+0
   7    1    1.50000000000000E+0
   10    1    1.16000000000000E+0
   11    1    9.00000000000000E-1

LoadCaseCombination     117   "SLU_103"
   1    1    1.35000000000000E+0
   2    1    1.35000000000000E+0
   3    1    1.50000000000000E+0
   9    1    1.50000000000000E+0
   10    1    1.16000000000000E+0
   11    1    9.00000000000000E-1

LoadCaseCombination     118   "SLU_104"
   1    1    1.35000000000000E+0
   2    1    1.35000000000000E+0
   4    1    1.50000000000000E+0
   9    1    1.50000000000000E+0
   10    1    1.16000000000000E+0
   11    1    9.00000000000000E-1

LoadCaseCombination     119   "SLU_105"
   1    1    1.35000000000000E+0
   2    1    1.35000000000000E+0
   3    1    1.50000000000000E+0
   7    1    1.50000000000000E+0
   10    1    1.16000000000000E+0
   12    1    9.00000000000000E-1

LoadCaseCombination     120   "SLU_106"
   1    1    1.35000000000000E+0
   2    1    1.35000000000000E+0
   4    1    1.50000000000000E+0
   7    1    1.50000000000000E+0
   10    1    1.16000000000000E+0
   12    1    9.00000000000000E-1

LoadCaseCombination     121   "SLU_107"
   1    1    1.35000000000000E+0
   2    1    1.35000000000000E+0
   3    1    1.50000000000000E+0
   9    1    1.50000000000000E+0
   10    1    1.16000000000000E+0
   12    1    9.00000000000000E-1
```

```
LoadCaseCombination     122   "SLU_108"
   1    1    1.35000000000000E+0
   2    1    1.35000000000000E+0
   4    1    1.50000000000000E+0
   9    1    1.50000000000000E+0
   10    1    1.16000000000000E+0
   12    1    9.00000000000000E-1

LoadCaseCombination     123   "SLU_109"
   1    1    1.35000000000000E+0
   2    1    1.35000000000000E+0
   3    1    1.50000000000000E+0
   6    1    1.05000000000000E+0
   7    1    1.50000000000000E+0
   8    1    1.16000000000000E+0
   11    1    9.00000000000000E-1

LoadCaseCombination     124   "SLU_110"
   1    1    1.35000000000000E+0
   2    1    1.35000000000000E+0
   4    1    1.50000000000000E+0
   6    1    1.05000000000000E+0
   7    1    1.50000000000000E+0
   8    1    1.16000000000000E+0
   11    1    9.00000000000000E-1

LoadCaseCombination     125   "SLU_111"
   1    1    1.35000000000000E+0
   2    1    1.35000000000000E+0
   3    1    1.50000000000000E+0
   6    1    1.05000000000000E+0
   9    1    1.50000000000000E+0
   8    1    1.16000000000000E+0
   11    1    9.00000000000000E-1

LoadCaseCombination     126   "SLU_112"
   1    1    1.35000000000000E+0
   2    1    1.35000000000000E+0
   4    1    1.50000000000000E+0
   6    1    1.05000000000000E+0
   9    1    1.50000000000000E+0
   8    1    1.16000000000000E+0
   11    1    9.00000000000000E-1

LoadCaseCombination     127   "SLU_113"
   1    1    1.35000000000000E+0
   2    1    1.35000000000000E+0
   3    1    1.50000000000000E+0
   6    1    1.05000000000000E+0
   7    1    1.50000000000000E+0
   8    1    1.16000000000000E+0
   12    1    9.00000000000000E-1

LoadCaseCombination     128   "SLU_114"
```

```
   1    1    1.35000000000000E+0
   2    1    1.35000000000000E+0
   4    1    1.50000000000000E+0
   6    1    1.05000000000000E+0
   7    1    1.50000000000000E+0
   8    1    1.16000000000000E+0
   12    1    9.00000000000000E-1

LoadCaseCombination     129   "SLU_115"
   1    1    1.35000000000000E+0
   2    1    1.35000000000000E+0
   3    1    1.50000000000000E+0
   6    1    1.05000000000000E+0
   9    1    1.50000000000000E+0
   8    1    1.16000000000000E+0
   12    1    9.00000000000000E-1

LoadCaseCombination     130   "SLU_116"
   1    1    1.35000000000000E+0
   2    1    1.35000000000000E+0
   4    1    1.50000000000000E+0
   6    1    1.05000000000000E+0
   9    1    1.50000000000000E+0
   8    1    1.16000000000000E+0
   12    1    9.00000000000000E-1

LoadCaseCombination     131   "SLU_117"
   1    1    1.35000000000000E+0
   2    1    1.35000000000000E+0
   3    1    1.50000000000000E+0
   6    1    1.05000000000000E+0
   7    1    1.50000000000000E+0
   10    1    1.16000000000000E+0
   11    1    9.00000000000000E-1

LoadCaseCombination     132   "SLU_118"
   1    1    1.35000000000000E+0
   2    1    1.35000000000000E+0
   4    1    1.50000000000000E+0
   6    1    1.05000000000000E+0
   7    1    1.50000000000000E+0
   10    1    1.16000000000000E+0
   11    1    9.00000000000000E-1

LoadCaseCombination     133   "SLU_119"
   1    1    1.35000000000000E+0
   2    1    1.35000000000000E+0
   3    1    1.50000000000000E+0
   6    1    1.05000000000000E+0
   9    1    1.50000000000000E+0
   10    1    1.16000000000000E+0
   11    1    9.00000000000000E-1

LoadCaseCombination     134   "SLU_120"
```

```
   1    1    1.35000000000000E+0
   2    1    1.35000000000000E+0
   4    1    1.50000000000000E+0
   6    1    1.05000000000000E+0
   9    1    1.50000000000000E+0
   10    1    1.16000000000000E+0
   11    1    9.00000000000000E-1

LoadCaseCombination     135   "SLU_121"
   1    1    1.35000000000000E+0
   2    1    1.35000000000000E+0
   3    1    1.50000000000000E+0
   6    1    1.05000000000000E+0
   7    1    1.50000000000000E+0
   10    1    1.16000000000000E+0
   12    1    9.00000000000000E-1

LoadCaseCombination     136   "SLU_122"
   1    1    1.35000000000000E+0
   2    1    1.35000000000000E+0
   4    1    1.50000000000000E+0
   6    1    1.05000000000000E+0
   7    1    1.50000000000000E+0
   10    1    1.16000000000000E+0
   12    1    9.00000000000000E-1

LoadCaseCombination     137   "SLU_123"
   1    1    1.35000000000000E+0
   2    1    1.35000000000000E+0
   3    1    1.50000000000000E+0
   6    1    1.05000000000000E+0
   9    1    1.50000000000000E+0
   10    1    1.16000000000000E+0
   12    1    9.00000000000000E-1

LoadCaseCombination     138   "SLU_124"
   1    1    1.35000000000000E+0
   2    1    1.35000000000000E+0
   4    1    1.50000000000000E+0
   6    1    1.05000000000000E+0
   9    1    1.50000000000000E+0
   10    1    1.16000000000000E+0
   12    1    9.00000000000000E-1

LoadCaseCombination     139   "SLU_125"
   1    1    1.35000000000000E+0
   2    1    1.35000000000000E+0
   3    1    1.50000000000000E+0
   6    1    1.05000000000000E+0
   8    1    1.45000000000000E+0

LoadCaseCombination     140   "SLU_126"
   1    1    1.35000000000000E+0
   2    1    1.35000000000000E+0
```

```
   4    1    1.50000000000000E+0
   6    1    1.05000000000000E+0
   8    1    1.45000000000000E+0

LoadCaseCombination     141   "SLU_127"
   1    1    1.35000000000000E+0
   2    1    1.35000000000000E+0
   3    1    1.50000000000000E+0
   6    1    1.05000000000000E+0
   10    1    1.45000000000000E+0

LoadCaseCombination     142   "SLU_128"
   1    1    1.35000000000000E+0
   2    1    1.35000000000000E+0
   4    1    1.50000000000000E+0
   6    1    1.05000000000000E+0
   10    1    1.45000000000000E+0

LoadCaseCombination     143   "SLU_129"
   1    1    1.35000000000000E+0
   2    1    1.35000000000000E+0
   3    1    1.50000000000000E+0
   7    1    9.00000000000000E-1
   8    1    1.45000000000000E+0

LoadCaseCombination     144   "SLU_130"
   1    1    1.35000000000000E+0
   2    1    1.35000000000000E+0
   4    1    1.50000000000000E+0
   7    1    9.00000000000000E-1
   8    1    1.45000000000000E+0

LoadCaseCombination     145   "SLU_131"
   1    1    1.35000000000000E+0
   2    1    1.35000000000000E+0
   3    1    1.50000000000000E+0
   9    1    9.00000000000000E-1
   8    1    1.45000000000000E+0

LoadCaseCombination     146   "SLU_132"
   1    1    1.35000000000000E+0
   2    1    1.35000000000000E+0
   4    1    1.50000000000000E+0
   9    1    9.00000000000000E-1
   8    1    1.45000000000000E+0

LoadCaseCombination     147   "SLU_133"
   1    1    1.35000000000000E+0
   2    1    1.35000000000000E+0
   3    1    1.50000000000000E+0
   7    1    9.00000000000000E-1
   10    1    1.45000000000000E+0

LoadCaseCombination     148   "SLU_134"
```

```
   1    1    1.35000000000000E+0
   2    1    1.35000000000000E+0
   4    1    1.50000000000000E+0
   7    1    9.00000000000000E-1
   10    1    1.45000000000000E+0

LoadCaseCombination     149   "SLU_135"
   1    1    1.35000000000000E+0
   2    1    1.35000000000000E+0
   3    1    1.50000000000000E+0
   9    1    9.00000000000000E-1
   10    1    1.45000000000000E+0

LoadCaseCombination     150   "SLU_136"
   1    1    1.35000000000000E+0
   2    1    1.35000000000000E+0
   4    1    1.50000000000000E+0
   9    1    9.00000000000000E-1
   10    1    1.45000000000000E+0

LoadCaseCombination     151   "SLU_137"
   1    1    1.35000000000000E+0
   2    1    1.35000000000000E+0
   3    1    1.50000000000000E+0
   8    1    1.45000000000000E+0
   11    1    9.00000000000000E-1

LoadCaseCombination     152   "SLU_138"
   1    1    1.35000000000000E+0
   2    1    1.35000000000000E+0
   4    1    1.50000000000000E+0
   8    1    1.45000000000000E+0
   11    1    9.00000000000000E-1

LoadCaseCombination     153   "SLU_139"
   1    1    1.35000000000000E+0
   2    1    1.35000000000000E+0
   3    1    1.50000000000000E+0
   8    1    1.45000000000000E+0
   11    1    9.00000000000000E-1

LoadCaseCombination     154   "SLU_140"
   1    1    1.35000000000000E+0
   2    1    1.35000000000000E+0
   4    1    1.50000000000000E+0
   8    1    1.45000000000000E+0
   11    1    9.00000000000000E-1

LoadCaseCombination     155   "SLU_141"
   1    1    1.35000000000000E+0
   2    1    1.35000000000000E+0
   3    1    1.50000000000000E+0
   10    1    1.45000000000000E+0
   12    1    9.00000000000000E-1
```

```
LoadCaseCombination     156   "SLU_142"
   1    1    1.35000000000000E+0
   2    1    1.35000000000000E+0
   4    1    1.50000000000000E+0
   10    1    1.45000000000000E+0
   12    1    9.00000000000000E-1

LoadCaseCombination     157   "SLU_143"
   1    1    1.35000000000000E+0
   2    1    1.35000000000000E+0
   3    1    1.50000000000000E+0
   10    1    1.45000000000000E+0
   12    1    9.00000000000000E-1

LoadCaseCombination     158   "SLU_144"
   1    1    1.35000000000000E+0
   2    1    1.35000000000000E+0
   4    1    1.50000000000000E+0
   10    1    1.45000000000000E+0
   12    1    9.00000000000000E-1

LoadCaseCombination     159   "SLU_145"
   1    1    1.35000000000000E+0
   2    1    1.35000000000000E+0
   3    1    1.50000000000000E+0
   6    1    1.05000000000000E+0
   7    1    9.00000000000000E-1
   8    1    1.45000000000000E+0

LoadCaseCombination     160   "SLU_146"
   1    1    1.35000000000000E+0
   2    1    1.35000000000000E+0
   4    1    1.50000000000000E+0
   6    1    1.05000000000000E+0
   7    1    9.00000000000000E-1
   8    1    1.45000000000000E+0

LoadCaseCombination     161   "SLU_147"
   1    1    1.35000000000000E+0
   2    1    1.35000000000000E+0
   3    1    1.50000000000000E+0
   6    1    1.05000000000000E+0
   9    1    9.00000000000000E-1
   8    1    1.45000000000000E+0

LoadCaseCombination     162   "SLU_148"
   1    1    1.35000000000000E+0
   2    1    1.35000000000000E+0
   4    1    1.50000000000000E+0
   6    1    1.05000000000000E+0
   9    1    9.00000000000000E-1
   8    1    1.45000000000000E+0
```

```
LoadCaseCombination     163   "SLU_149"
   1    1    1.35000000000000E+0
   2    1    1.35000000000000E+0
   3    1    1.50000000000000E+0
   6    1    1.05000000000000E+0
   7    1    9.00000000000000E-1
   10    1    1.45000000000000E+0

LoadCaseCombination     164   "SLU_150"
   1    1    1.35000000000000E+0
   2    1    1.35000000000000E+0
   4    1    1.50000000000000E+0
   6    1    1.05000000000000E+0
   7    1    9.00000000000000E-1
   10    1    1.45000000000000E+0

LoadCaseCombination     165   "SLU_151"
   1    1    1.35000000000000E+0
   2    1    1.35000000000000E+0
   3    1    1.50000000000000E+0
   6    1    1.05000000000000E+0
   9    1    9.00000000000000E-1
   10    1    1.45000000000000E+0

LoadCaseCombination     166   "SLU_152"
   1    1    1.35000000000000E+0
   2    1    1.35000000000000E+0
   4    1    1.50000000000000E+0
   6    1    1.05000000000000E+0
   9    1    9.00000000000000E-1
   10    1    1.45000000000000E+0

LoadCaseCombination     167   "SLU_153"
   1    1    1.35000000000000E+0
   2    1    1.35000000000000E+0
   3    1    1.50000000000000E+0
   6    1    1.05000000000000E+0
   8    1    1.45000000000000E+0
   11    1    9.00000000000000E-1

LoadCaseCombination     168   "SLU_154"
   1    1    1.35000000000000E+0
   2    1    1.35000000000000E+0
   4    1    1.50000000000000E+0
   6    1    1.05000000000000E+0
   8    1    1.45000000000000E+0
   11    1    9.00000000000000E-1

LoadCaseCombination     169   "SLU_155"
   1    1    1.35000000000000E+0
   2    1    1.35000000000000E+0
   3    1    1.50000000000000E+0
   6    1    1.05000000000000E+0
   8    1    1.45000000000000E+0
```

```
   11    1    9.00000000000000E-1

LoadCaseCombination     170   "SLU_156"
   1    1    1.35000000000000E+0
   2    1    1.35000000000000E+0
   4    1    1.50000000000000E+0
   6    1    1.05000000000000E+0
   8    1    1.45000000000000E+0
   11    1    9.00000000000000E-1

LoadCaseCombination     171   "SLU_157"
   1    1    1.35000000000000E+0
   2    1    1.35000000000000E+0
   3    1    1.50000000000000E+0
   6    1    1.05000000000000E+0
   10    1    1.45000000000000E+0
   12    1    9.00000000000000E-1

LoadCaseCombination     172   "SLU_158"
   1    1    1.35000000000000E+0
   2    1    1.35000000000000E+0
   4    1    1.50000000000000E+0
   6    1    1.05000000000000E+0
   10    1    1.45000000000000E+0
   12    1    9.00000000000000E-1

LoadCaseCombination     173   "SLU_159"
   1    1    1.35000000000000E+0
   2    1    1.35000000000000E+0
   3    1    1.50000000000000E+0
   6    1    1.05000000000000E+0
   10    1    1.45000000000000E+0
   12    1    9.00000000000000E-1

LoadCaseCombination     174   "SLU_160"
   1    1    1.35000000000000E+0
   2    1    1.35000000000000E+0
   4    1    1.50000000000000E+0
   6    1    1.05000000000000E+0
   10    1    1.45000000000000E+0
   12    1    9.00000000000000E-1

LoadCaseCombination     175   "SLU_161"
   1    1    1.35000000000000E+0
   2    1    1.35000000000000E+0
   3    1    1.50000000000000E+0
   7    1    9.00000000000000E-1
   8    1    1.45000000000000E+0
   11    1    9.00000000000000E-1

LoadCaseCombination     176   "SLU_162"
   1    1    1.35000000000000E+0
   2    1    1.35000000000000E+0
   4    1    1.50000000000000E+0
```

```
   7    1    9.00000000000000E-1
   8    1    1.45000000000000E+0
   11    1    9.00000000000000E-1

LoadCaseCombination     177   "SLU_163"
   1    1    1.35000000000000E+0
   2    1    1.35000000000000E+0
   3    1    1.50000000000000E+0
   9    1    9.00000000000000E-1
   8    1    1.45000000000000E+0
   11    1    9.00000000000000E-1

LoadCaseCombination     178   "SLU_164"
   1    1    1.35000000000000E+0
   2    1    1.35000000000000E+0
   4    1    1.50000000000000E+0
   9    1    9.00000000000000E-1
   8    1    1.45000000000000E+0
   11    1    9.00000000000000E-1

LoadCaseCombination     179   "SLU_165"
   1    1    1.35000000000000E+0
   2    1    1.35000000000000E+0
   3    1    1.50000000000000E+0
   7    1    9.00000000000000E-1
   8    1    1.45000000000000E+0
   12    1    9.00000000000000E-1

LoadCaseCombination     180   "SLU_166"
   1    1    1.35000000000000E+0
   2    1    1.35000000000000E+0
   4    1    1.50000000000000E+0
   7    1    9.00000000000000E-1
   8    1    1.45000000000000E+0
   12    1    9.00000000000000E-1

LoadCaseCombination     181   "SLU_167"
   1    1    1.35000000000000E+0
   2    1    1.35000000000000E+0
   3    1    1.50000000000000E+0
   9    1    9.00000000000000E-1
   8    1    1.45000000000000E+0
   12    1    9.00000000000000E-1

LoadCaseCombination     182   "SLU_168"
   1    1    1.35000000000000E+0
   2    1    1.35000000000000E+0
   4    1    1.50000000000000E+0
   9    1    9.00000000000000E-1
   8    1    1.45000000000000E+0
   12    1    9.00000000000000E-1

LoadCaseCombination     183   "SLU_169"
   1    1    1.35000000000000E+0
```

```
   2    1    1.35000000000000E+0
   3    1    1.50000000000000E+0
   7    1    9.00000000000000E-1
   10    1    1.45000000000000E+0
   11    1    9.00000000000000E-1

LoadCaseCombination     184   "SLU_170"
   1    1    1.35000000000000E+0
   2    1    1.35000000000000E+0
   4    1    1.50000000000000E+0
   7    1    9.00000000000000E-1
   10    1    1.45000000000000E+0
   11    1    9.00000000000000E-1

LoadCaseCombination     185   "SLU_171"
   1    1    1.35000000000000E+0
   2    1    1.35000000000000E+0
   3    1    1.50000000000000E+0
   9    1    9.00000000000000E-1
   10    1    1.45000000000000E+0
   11    1    9.00000000000000E-1

LoadCaseCombination     186   "SLU_172"
   1    1    1.35000000000000E+0
   2    1    1.35000000000000E+0
   4    1    1.50000000000000E+0
   9    1    9.00000000000000E-1
   10    1    1.45000000000000E+0
   11    1    9.00000000000000E-1

LoadCaseCombination     187   "SLU_173"
   1    1    1.35000000000000E+0
   2    1    1.35000000000000E+0
   3    1    1.50000000000000E+0
   7    1    9.00000000000000E-1
   10    1    1.45000000000000E+0
   12    1    9.00000000000000E-1

LoadCaseCombination     188   "SLU_174"
   1    1    1.35000000000000E+0
   2    1    1.35000000000000E+0
   4    1    1.50000000000000E+0
   7    1    9.00000000000000E-1
   10    1    1.45000000000000E+0
   12    1    9.00000000000000E-1

LoadCaseCombination     189   "SLU_175"
   1    1    1.35000000000000E+0
   2    1    1.35000000000000E+0
   3    1    1.50000000000000E+0
   9    1    9.00000000000000E-1
   10    1    1.45000000000000E+0
   12    1    9.00000000000000E-1
```

```
LoadCaseCombination     190   "SLU_176"
   1    1    1.35000000000000E+0
   2    1    1.35000000000000E+0
   4    1    1.50000000000000E+0
   9    1    9.00000000000000E-1
   10    1    1.45000000000000E+0
   12    1    9.00000000000000E-1

LoadCaseCombination     191   "SLU_177"
   1    1    1.35000000000000E+0
   2    1    1.35000000000000E+0
   3    1    1.50000000000000E+0
   6    1    1.05000000000000E+0
   7    1    9.00000000000000E-1
   8    1    1.45000000000000E+0
   11    1    9.00000000000000E-1

LoadCaseCombination     192   "SLU_178"
   1    1    1.35000000000000E+0
   2    1    1.35000000000000E+0
   4    1    1.50000000000000E+0
   6    1    1.05000000000000E+0
   7    1    9.00000000000000E-1
   8    1    1.45000000000000E+0
   11    1    9.00000000000000E-1

LoadCaseCombination     193   "SLU_179"
   1    1    1.35000000000000E+0
   2    1    1.35000000000000E+0
   3    1    1.50000000000000E+0
   6    1    1.05000000000000E+0
   9    1    9.00000000000000E-1
   8    1    1.45000000000000E+0
   11    1    9.00000000000000E-1

LoadCaseCombination     194   "SLU_180"
   1    1    1.35000000000000E+0
   2    1    1.35000000000000E+0
   4    1    1.50000000000000E+0
   6    1    1.05000000000000E+0
   9    1    9.00000000000000E-1
   8    1    1.45000000000000E+0
   11    1    9.00000000000000E-1

LoadCaseCombination     195   "SLU_181"
   1    1    1.35000000000000E+0
   2    1    1.35000000000000E+0
   3    1    1.50000000000000E+0
   6    1    1.05000000000000E+0
   7    1    9.00000000000000E-1
   8    1    1.45000000000000E+0
   12    1    9.00000000000000E-1

LoadCaseCombination     196   "SLU_182"
```

```
   1    1    1.35000000000000E+0
   2    1    1.35000000000000E+0
   4    1    1.50000000000000E+0
   6    1    1.05000000000000E+0
   7    1    9.00000000000000E-1
   8    1    1.45000000000000E+0
   12    1    9.00000000000000E-1

LoadCaseCombination     197   "SLU_183"
   1    1    1.35000000000000E+0
   2    1    1.35000000000000E+0
   3    1    1.50000000000000E+0
   6    1    1.05000000000000E+0
   9    1    9.00000000000000E-1
   8    1    1.45000000000000E+0
   12    1    9.00000000000000E-1

LoadCaseCombination     198   "SLU_184"
   1    1    1.35000000000000E+0
   2    1    1.35000000000000E+0
   4    1    1.50000000000000E+0
   6    1    1.05000000000000E+0
   9    1    9.00000000000000E-1
   8    1    1.45000000000000E+0
   12    1    9.00000000000000E-1

LoadCaseCombination     199   "SLU_185"
   1    1    1.35000000000000E+0
   2    1    1.35000000000000E+0
   3    1    1.50000000000000E+0
   6    1    1.05000000000000E+0
   7    1    9.00000000000000E-1
   10    1    1.45000000000000E+0
   11    1    9.00000000000000E-1

LoadCaseCombination     200   "SLU_186"
   1    1    1.35000000000000E+0
   2    1    1.35000000000000E+0
   4    1    1.50000000000000E+0
   6    1    1.05000000000000E+0
   7    1    9.00000000000000E-1
   10    1    1.45000000000000E+0
   11    1    9.00000000000000E-1

LoadCaseCombination     201   "SLU_187"
   1    1    1.35000000000000E+0
   2    1    1.35000000000000E+0
   3    1    1.50000000000000E+0
   6    1    1.05000000000000E+0
   9    1    9.00000000000000E-1
   10    1    1.45000000000000E+0
   11    1    9.00000000000000E-1

LoadCaseCombination     202   "SLU_188"
```

```
   1    1    1.35000000000000E+0
   2    1    1.35000000000000E+0
   4    1    1.50000000000000E+0
   6    1    1.05000000000000E+0
   9    1    9.00000000000000E-1
   10    1    1.45000000000000E+0
   11    1    9.00000000000000E-1

LoadCaseCombination     203   "SLU_189"
   1    1    1.35000000000000E+0
   2    1    1.35000000000000E+0
   3    1    1.50000000000000E+0
   6    1    1.05000000000000E+0
   7    1    9.00000000000000E-1
   10    1    1.45000000000000E+0
   12    1    9.00000000000000E-1

LoadCaseCombination     204   "SLU_190"
   1    1    1.35000000000000E+0
   2    1    1.35000000000000E+0
   4    1    1.50000000000000E+0
   6    1    1.05000000000000E+0
   7    1    9.00000000000000E-1
   10    1    1.45000000000000E+0
   12    1    9.00000000000000E-1

LoadCaseCombination     205   "SLU_191"
   1    1    1.35000000000000E+0
   2    1    1.35000000000000E+0
   3    1    1.50000000000000E+0
   6    1    1.05000000000000E+0
   9    1    9.00000000000000E-1
   10    1    1.45000000000000E+0
   12    1    9.00000000000000E-1

LoadCaseCombination     206   "SLU_192"
   1    1    1.35000000000000E+0
   2    1    1.35000000000000E+0
   4    1    1.50000000000000E+0
   6    1    1.05000000000000E+0
   9    1    9.00000000000000E-1
   10    1    1.45000000000000E+0
   12    1    9.00000000000000E-1

LoadCaseCombination     207   "SLU_193"
   1    1    1.35000000000000E+0
   2    1    1.35000000000000E+0
   3    1    1.50000000000000E+0
   6    1    1.05000000000000E+0
   11    1    1.50000000000000E+0

LoadCaseCombination     208   "SLU_194"
   1    1    1.35000000000000E+0
   2    1    1.35000000000000E+0
```

```
   4    1    1.50000000000000E+0
   6    1    1.05000000000000E+0
   11    1    1.50000000000000E+0

LoadCaseCombination     209   "SLU_195"
   1    1    1.35000000000000E+0
   2    1    1.35000000000000E+0
   3    1    1.50000000000000E+0
   6    1    1.05000000000000E+0
   12    1    1.50000000000000E+0

LoadCaseCombination     210   "SLU_196"
   1    1    1.35000000000000E+0
   2    1    1.35000000000000E+0
   4    1    1.50000000000000E+0
   6    1    1.05000000000000E+0
   12    1    1.50000000000000E+0

LoadCaseCombination     211   "SLU_197"
   1    1    1.35000000000000E+0
   2    1    1.35000000000000E+0
   3    1    1.50000000000000E+0
   7    1    9.00000000000000E-1
   11    1    1.50000000000000E+0

LoadCaseCombination     212   "SLU_198"
   1    1    1.35000000000000E+0
   2    1    1.35000000000000E+0
   4    1    1.50000000000000E+0
   7    1    9.00000000000000E-1
   11    1    1.50000000000000E+0

LoadCaseCombination     213   "SLU_199"
   1    1    1.35000000000000E+0
   2    1    1.35000000000000E+0
   3    1    1.50000000000000E+0
   9    1    9.00000000000000E-1
   11    1    1.50000000000000E+0

LoadCaseCombination     214   "SLU_200"
   1    1    1.35000000000000E+0
   2    1    1.35000000000000E+0
   4    1    1.50000000000000E+0
   9    1    9.00000000000000E-1
   11    1    1.50000000000000E+0

LoadCaseCombination     215   "SLU_201"
   1    1    1.35000000000000E+0
   2    1    1.35000000000000E+0
   3    1    1.50000000000000E+0
   7    1    9.00000000000000E-1
   12    1    1.50000000000000E+0

LoadCaseCombination     216   "SLU_202"
```

```
   1    1    1.35000000000000E+0
   2    1    1.35000000000000E+0
   4    1    1.50000000000000E+0
   7    1    9.00000000000000E-1
   12    1    1.50000000000000E+0

LoadCaseCombination     217   "SLU_203"
   1    1    1.35000000000000E+0
   2    1    1.35000000000000E+0
   3    1    1.50000000000000E+0
   9    1    9.00000000000000E-1
   12    1    1.50000000000000E+0

LoadCaseCombination     218   "SLU_204"
   1    1    1.35000000000000E+0
   2    1    1.35000000000000E+0
   4    1    1.50000000000000E+0
   9    1    9.00000000000000E-1
   12    1    1.50000000000000E+0

LoadCaseCombination     219   "SLU_205"
   1    1    1.35000000000000E+0
   2    1    1.35000000000000E+0
   3    1    1.50000000000000E+0
   8    1    1.16000000000000E+0
   11    1    1.50000000000000E+0

LoadCaseCombination     220   "SLU_206"
   1    1    1.35000000000000E+0
   2    1    1.35000000000000E+0
   4    1    1.50000000000000E+0
   8    1    1.16000000000000E+0
   11    1    1.50000000000000E+0

LoadCaseCombination     221   "SLU_207"
   1    1    1.35000000000000E+0
   2    1    1.35000000000000E+0
   3    1    1.50000000000000E+0
   8    1    1.16000000000000E+0
   11    1    1.50000000000000E+0

LoadCaseCombination     222   "SLU_208"
   1    1    1.35000000000000E+0
   2    1    1.35000000000000E+0
   4    1    1.50000000000000E+0
   8    1    1.16000000000000E+0
   11    1    1.50000000000000E+0

LoadCaseCombination     223   "SLU_209"
   1    1    1.35000000000000E+0
   2    1    1.35000000000000E+0
   3    1    1.50000000000000E+0
   10    1    1.16000000000000E+0
   12    1    1.50000000000000E+0
```

```
LoadCaseCombination     224   "SLU_210"
   1    1    1.35000000000000E+0
   2    1    1.35000000000000E+0
   4    1    1.50000000000000E+0
   10    1    1.16000000000000E+0
   12    1    1.50000000000000E+0

LoadCaseCombination     225   "SLU_211"
   1    1    1.35000000000000E+0
   2    1    1.35000000000000E+0
   3    1    1.50000000000000E+0
   10    1    1.16000000000000E+0
   12    1    1.50000000000000E+0

LoadCaseCombination     226   "SLU_212"
   1    1    1.35000000000000E+0
   2    1    1.35000000000000E+0
   4    1    1.50000000000000E+0
   10    1    1.16000000000000E+0
   12    1    1.50000000000000E+0

LoadCaseCombination     227   "SLU_213"
   1    1    1.35000000000000E+0
   2    1    1.35000000000000E+0
   3    1    1.50000000000000E+0
   6    1    1.05000000000000E+0
   7    1    9.00000000000000E-1
   11    1    1.50000000000000E+0

LoadCaseCombination     228   "SLU_214"
   1    1    1.35000000000000E+0
   2    1    1.35000000000000E+0
   4    1    1.50000000000000E+0
   6    1    1.05000000000000E+0
   7    1    9.00000000000000E-1
   11    1    1.50000000000000E+0

LoadCaseCombination     229   "SLU_215"
   1    1    1.35000000000000E+0
   2    1    1.35000000000000E+0
   3    1    1.50000000000000E+0
   6    1    1.05000000000000E+0
   9    1    9.00000000000000E-1
   11    1    1.50000000000000E+0

LoadCaseCombination     230   "SLU_216"
   1    1    1.35000000000000E+0
   2    1    1.35000000000000E+0
   4    1    1.50000000000000E+0
   6    1    1.05000000000000E+0
   9    1    9.00000000000000E-1
   11    1    1.50000000000000E+0
```

```
LoadCaseCombination     231   "SLU_217"
   1    1    1.35000000000000E+0
   2    1    1.35000000000000E+0
   3    1    1.50000000000000E+0
   6    1    1.05000000000000E+0
   7    1    9.00000000000000E-1
   12    1    1.50000000000000E+0

LoadCaseCombination     232   "SLU_218"
   1    1    1.35000000000000E+0
   2    1    1.35000000000000E+0
   4    1    1.50000000000000E+0
   6    1    1.05000000000000E+0
   7    1    9.00000000000000E-1
   12    1    1.50000000000000E+0

LoadCaseCombination     233   "SLU_219"
   1    1    1.35000000000000E+0
   2    1    1.35000000000000E+0
   3    1    1.50000000000000E+0
   6    1    1.05000000000000E+0
   9    1    9.00000000000000E-1
   12    1    1.50000000000000E+0

LoadCaseCombination     234   "SLU_220"
   1    1    1.35000000000000E+0
   2    1    1.35000000000000E+0
   4    1    1.50000000000000E+0
   6    1    1.05000000000000E+0
   9    1    9.00000000000000E-1
   12    1    1.50000000000000E+0

LoadCaseCombination     235   "SLU_221"
   1    1    1.35000000000000E+0
   2    1    1.35000000000000E+0
   3    1    1.50000000000000E+0
   6    1    1.05000000000000E+0
   8    1    1.16000000000000E+0
   11    1    1.50000000000000E+0

LoadCaseCombination     236   "SLU_222"
   1    1    1.35000000000000E+0
   2    1    1.35000000000000E+0
   4    1    1.50000000000000E+0
   6    1    1.05000000000000E+0
   8    1    1.16000000000000E+0
   11    1    1.50000000000000E+0

LoadCaseCombination     237   "SLU_223"
   1    1    1.35000000000000E+0
   2    1    1.35000000000000E+0
   3    1    1.50000000000000E+0
   6    1    1.05000000000000E+0
   8    1    1.16000000000000E+0
```

```
   11    1    1.50000000000000E+0

LoadCaseCombination     238   "SLU_224"
   1    1    1.35000000000000E+0
   2    1    1.35000000000000E+0
   4    1    1.50000000000000E+0
   6    1    1.05000000000000E+0
   8    1    1.16000000000000E+0
   11    1    1.50000000000000E+0

LoadCaseCombination     239   "SLU_225"
   1    1    1.35000000000000E+0
   2    1    1.35000000000000E+0
   3    1    1.50000000000000E+0
   6    1    1.05000000000000E+0
   10    1    1.16000000000000E+0
   12    1    1.50000000000000E+0

LoadCaseCombination     240   "SLU_226"
   1    1    1.35000000000000E+0
   2    1    1.35000000000000E+0
   4    1    1.50000000000000E+0
   6    1    1.05000000000000E+0
   10    1    1.16000000000000E+0
   12    1    1.50000000000000E+0

LoadCaseCombination     241   "SLU_227"
   1    1    1.35000000000000E+0
   2    1    1.35000000000000E+0
   3    1    1.50000000000000E+0
   6    1    1.05000000000000E+0
   10    1    1.16000000000000E+0
   12    1    1.50000000000000E+0

LoadCaseCombination     242   "SLU_228"
   1    1    1.35000000000000E+0
   2    1    1.35000000000000E+0
   4    1    1.50000000000000E+0
   6    1    1.05000000000000E+0
   10    1    1.16000000000000E+0
   12    1    1.50000000000000E+0

LoadCaseCombination     243   "SLU_229"
   1    1    1.35000000000000E+0
   2    1    1.35000000000000E+0
   3    1    1.50000000000000E+0
   7    1    9.00000000000000E-1
   8    1    1.16000000000000E+0
   11    1    1.50000000000000E+0

LoadCaseCombination     244   "SLU_230"
   1    1    1.35000000000000E+0
   2    1    1.35000000000000E+0
   4    1    1.50000000000000E+0
```

```
   7    1    9.00000000000000E-1
   8    1    1.16000000000000E+0
   11    1    1.50000000000000E+0

LoadCaseCombination     245   "SLU_231"
   1    1    1.35000000000000E+0
   2    1    1.35000000000000E+0
   3    1    1.50000000000000E+0
   9    1    9.00000000000000E-1
   8    1    1.16000000000000E+0
   11    1    1.50000000000000E+0

LoadCaseCombination     246   "SLU_232"
   1    1    1.35000000000000E+0
   2    1    1.35000000000000E+0
   4    1    1.50000000000000E+0
   9    1    9.00000000000000E-1
   8    1    1.16000000000000E+0
   11    1    1.50000000000000E+0

LoadCaseCombination     247   "SLU_233"
   1    1    1.35000000000000E+0
   2    1    1.35000000000000E+0
   3    1    1.50000000000000E+0
   7    1    9.00000000000000E-1
   8    1    1.16000000000000E+0
   12    1    1.50000000000000E+0

LoadCaseCombination     248   "SLU_234"
   1    1    1.35000000000000E+0
   2    1    1.35000000000000E+0
   4    1    1.50000000000000E+0
   7    1    9.00000000000000E-1
   8    1    1.16000000000000E+0
   12    1    1.50000000000000E+0

LoadCaseCombination     249   "SLU_235"
   1    1    1.35000000000000E+0
   2    1    1.35000000000000E+0
   3    1    1.50000000000000E+0
   9    1    9.00000000000000E-1
   8    1    1.16000000000000E+0
   12    1    1.50000000000000E+0

LoadCaseCombination     250   "SLU_236"
   1    1    1.35000000000000E+0
   2    1    1.35000000000000E+0
   4    1    1.50000000000000E+0
   9    1    9.00000000000000E-1
   8    1    1.16000000000000E+0
   12    1    1.50000000000000E+0

LoadCaseCombination     251   "SLU_237"
   1    1    1.35000000000000E+0
```

```
   2    1    1.35000000000000E+0
   3    1    1.50000000000000E+0
   7    1    9.00000000000000E-1
   10    1    1.16000000000000E+0
   11    1    1.50000000000000E+0

LoadCaseCombination     252   "SLU_238"
   1    1    1.35000000000000E+0
   2    1    1.35000000000000E+0
   4    1    1.50000000000000E+0
   7    1    9.00000000000000E-1
   10    1    1.16000000000000E+0
   11    1    1.50000000000000E+0

LoadCaseCombination     253   "SLU_239"
   1    1    1.35000000000000E+0
   2    1    1.35000000000000E+0
   3    1    1.50000000000000E+0
   9    1    9.00000000000000E-1
   10    1    1.16000000000000E+0
   11    1    1.50000000000000E+0

LoadCaseCombination     254   "SLU_240"
   1    1    1.35000000000000E+0
   2    1    1.35000000000000E+0
   4    1    1.50000000000000E+0
   9    1    9.00000000000000E-1
   10    1    1.16000000000000E+0
   11    1    1.50000000000000E+0

LoadCaseCombination     255   "SLU_241"
   1    1    1.35000000000000E+0
   2    1    1.35000000000000E+0
   3    1    1.50000000000000E+0
   7    1    9.00000000000000E-1
   10    1    1.16000000000000E+0
   12    1    1.50000000000000E+0

LoadCaseCombination     256   "SLU_242"
   1    1    1.35000000000000E+0
   2    1    1.35000000000000E+0
   4    1    1.50000000000000E+0
   7    1    9.00000000000000E-1
   10    1    1.16000000000000E+0
   12    1    1.50000000000000E+0

LoadCaseCombination     257   "SLU_243"
   1    1    1.35000000000000E+0
   2    1    1.35000000000000E+0
   3    1    1.50000000000000E+0
   9    1    9.00000000000000E-1
   10    1    1.16000000000000E+0
   12    1    1.50000000000000E+0
```

```
LoadCaseCombination     258   "SLU_244"
   1    1    1.35000000000000E+0
   2    1    1.35000000000000E+0
   4    1    1.50000000000000E+0
   9    1    9.00000000000000E-1
   10    1    1.16000000000000E+0
   12    1    1.50000000000000E+0

LoadCaseCombination     259   "SLU_245"
   1    1    1.35000000000000E+0
   2    1    1.35000000000000E+0
   3    1    1.50000000000000E+0
   6    1    1.05000000000000E+0
   7    1    9.00000000000000E-1
   8    1    1.16000000000000E+0
   11    1    1.50000000000000E+0

LoadCaseCombination     260   "SLU_246"
   1    1    1.35000000000000E+0
   2    1    1.35000000000000E+0
   4    1    1.50000000000000E+0
   6    1    1.05000000000000E+0
   7    1    9.00000000000000E-1
   8    1    1.16000000000000E+0
   11    1    1.50000000000000E+0

LoadCaseCombination     261   "SLU_247"
   1    1    1.35000000000000E+0
   2    1    1.35000000000000E+0
   3    1    1.50000000000000E+0
   6    1    1.05000000000000E+0
   9    1    9.00000000000000E-1
   8    1    1.16000000000000E+0
   11    1    1.50000000000000E+0

LoadCaseCombination     262   "SLU_248"
   1    1    1.35000000000000E+0
   2    1    1.35000000000000E+0
   4    1    1.50000000000000E+0
   6    1    1.05000000000000E+0
   9    1    9.00000000000000E-1
   8    1    1.16000000000000E+0
   11    1    1.50000000000000E+0

LoadCaseCombination     263   "SLU_249"
   1    1    1.35000000000000E+0
   2    1    1.35000000000000E+0
   3    1    1.50000000000000E+0
   6    1    1.05000000000000E+0
   7    1    9.00000000000000E-1
   8    1    1.16000000000000E+0
   12    1    1.50000000000000E+0

LoadCaseCombination     264   "SLU_250"
```

```
   1    1    1.35000000000000E+0
   2    1    1.35000000000000E+0
   4    1    1.50000000000000E+0
   6    1    1.05000000000000E+0
   7    1    9.00000000000000E-1
   8    1    1.16000000000000E+0
   12    1    1.50000000000000E+0

LoadCaseCombination     265   "SLU_251"
   1    1    1.35000000000000E+0
   2    1    1.35000000000000E+0
   3    1    1.50000000000000E+0
   6    1    1.05000000000000E+0
   9    1    9.00000000000000E-1
   8    1    1.16000000000000E+0
   12    1    1.50000000000000E+0

LoadCaseCombination     266   "SLU_252"
   1    1    1.35000000000000E+0
   2    1    1.35000000000000E+0
   4    1    1.50000000000000E+0
   6    1    1.05000000000000E+0
   9    1    9.00000000000000E-1
   8    1    1.16000000000000E+0
   12    1    1.50000000000000E+0

LoadCaseCombination     267   "SLU_253"
   1    1    1.35000000000000E+0
   2    1    1.35000000000000E+0
   3    1    1.50000000000000E+0
   6    1    1.05000000000000E+0
   7    1    9.00000000000000E-1
   10    1    1.16000000000000E+0
   11    1    1.50000000000000E+0

LoadCaseCombination     268   "SLU_254"
   1    1    1.35000000000000E+0
   2    1    1.35000000000000E+0
   4    1    1.50000000000000E+0
   6    1    1.05000000000000E+0
   7    1    9.00000000000000E-1
   10    1    1.16000000000000E+0
   11    1    1.50000000000000E+0

LoadCaseCombination     269   "SLU_255"
   1    1    1.35000000000000E+0
   2    1    1.35000000000000E+0
   3    1    1.50000000000000E+0
   6    1    1.05000000000000E+0
   9    1    9.00000000000000E-1
   10    1    1.16000000000000E+0
   11    1    1.50000000000000E+0

LoadCaseCombination     270   "SLU_256"
```

```
   1    1    1.35000000000000E+0
   2    1    1.35000000000000E+0
   4    1    1.50000000000000E+0
   6    1    1.05000000000000E+0
   9    1    9.00000000000000E-1
   10    1    1.16000000000000E+0
   11    1    1.50000000000000E+0

LoadCaseCombination     271   "SLU_257"
   1    1    1.35000000000000E+0
   2    1    1.35000000000000E+0
   3    1    1.50000000000000E+0
   6    1    1.05000000000000E+0
   7    1    9.00000000000000E-1
   10    1    1.16000000000000E+0
   12    1    1.50000000000000E+0

LoadCaseCombination     272   "SLU_258"
   1    1    1.35000000000000E+0
   2    1    1.35000000000000E+0
   4    1    1.50000000000000E+0
   6    1    1.05000000000000E+0
   7    1    9.00000000000000E-1
   10    1    1.16000000000000E+0
   12    1    1.50000000000000E+0

LoadCaseCombination     273   "SLU_259"
   1    1    1.35000000000000E+0
   2    1    1.35000000000000E+0
   3    1    1.50000000000000E+0
   6    1    1.05000000000000E+0
   9    1    9.00000000000000E-1
   10    1    1.16000000000000E+0
   12    1    1.50000000000000E+0

LoadCaseCombination     274   "SLU_260"
   1    1    1.35000000000000E+0
   2    1    1.35000000000000E+0
   4    1    1.50000000000000E+0
   6    1    1.05000000000000E+0
   9    1    9.00000000000000E-1
   10    1    1.16000000000000E+0
   12    1    1.50000000000000E+0

LoadCaseCombination     275   "SLE_001"
   1    1    1.00000000000000E+0
   2    1    1.00000000000000E+0
   4    1    1.00000000000000E+0

LoadCaseCombination     276   "SLE_01"
   1    1    1.00000000000000E+0
   2    1    1.00000000000000E+0
   3    1    1.00000000000000E+0
   5    1    1.00000000000000E+0
```

```
LoadCaseCombination     277   "SLE_02"
   1    1    1.00000000000000E+0
   2    1    1.00000000000000E+0
   4    1    1.00000000000000E+0
   5    1    1.00000000000000E+0

LoadCaseCombination     278   "SLE_03"
   1    1    1.00000000000000E+0
   2    1    1.00000000000000E+0
   3    1    1.00000000000000E+0
   6    1    1.00000000000000E+0

LoadCaseCombination     279   "SLE_04"
   1    1    1.00000000000000E+0
   2    1    1.00000000000000E+0
   4    1    1.00000000000000E+0
   6    1    1.00000000000000E+0

LoadCaseCombination     280   "SLE_05"
   1    1    1.00000000000000E+0
   2    1    1.00000000000000E+0
   3    1    1.00000000000000E+0
   7    1    1.00000000000000E+0

LoadCaseCombination     281   "SLE_06"
   1    1    1.00000000000000E+0
   2    1    1.00000000000000E+0
   4    1    1.00000000000000E+0
   7    1    1.00000000000000E+0

LoadCaseCombination     282   "SLE_07"
   1    1    1.00000000000000E+0
   2    1    1.00000000000000E+0
   3    1    1.00000000000000E+0
   9    1    1.00000000000000E+0

LoadCaseCombination     283   "SLE_08"
   1    1    1.00000000000000E+0
   2    1    1.00000000000000E+0
   4    1    1.00000000000000E+0
   9    1    1.00000000000000E+0

LoadCaseCombination     284   "SLE_09"
   1    1    1.00000000000000E+0
   2    1    1.00000000000000E+0
   3    1    1.00000000000000E+0
   8    1    1.00000000000000E+0

LoadCaseCombination     285   "SLE_10"
   1    1    1.00000000000000E+0
   2    1    1.00000000000000E+0
   4    1    1.00000000000000E+0
   8    1    1.00000000000000E+0
```

```
LoadCaseCombination     286   "SLE_11"
   1    1    1.00000000000000E+0
   2    1    1.00000000000000E+0
   3    1    1.00000000000000E+0
   10    1    1.00000000000000E+0

LoadCaseCombination     287   "SLE_12"
   1    1    1.00000000000000E+0
   2    1    1.00000000000000E+0
   4    1    1.00000000000000E+0
   10    1    1.00000000000000E+0

LoadCaseCombination     288   "SLE_13"
   1    1    1.00000000000000E+0
   2    1    1.00000000000000E+0
   3    1    1.00000000000000E+0
   11    1    1.00000000000000E+0

LoadCaseCombination     289   "SLE_14"
   1    1    1.00000000000000E+0
   2    1    1.00000000000000E+0
   4    1    1.00000000000000E+0
   11    1    1.00000000000000E+0

LoadCaseCombination     290   "SLE_15"
   1    1    1.00000000000000E+0
   2    1    1.00000000000000E+0
   3    1    1.00000000000000E+0
   12    1    1.00000000000000E+0

LoadCaseCombination     291   "SLE_16"
   1    1    1.00000000000000E+0
   2    1    1.00000000000000E+0
   4    1    1.00000000000000E+0
   12    1    1.00000000000000E+0

LoadCaseCombination     292   "SLE_17"
   1    1    1.00000000000000E+0
   2    1    1.00000000000000E+0
   3    1    1.00000000000000E+0
   5    1    1.00000000000000E+0
   7    1    6.00000000000000E-1

LoadCaseCombination     293   "SLE_18"
   1    1    1.00000000000000E+0
   2    1    1.00000000000000E+0
   4    1    1.00000000000000E+0
   5    1    1.00000000000000E+0
   7    1    6.00000000000000E-1

LoadCaseCombination     294   "SLE_19"
   1    1    1.00000000000000E+0
   2    1    1.00000000000000E+0
```

```
   3    1    1.00000000000000E+0
   5    1    1.00000000000000E+0
   9    1    6.00000000000000E-1

LoadCaseCombination     295   "SLE_20"
   1    1    1.00000000000000E+0
   2    1    1.00000000000000E+0
   4    1    1.00000000000000E+0
   5    1    1.00000000000000E+0
   9    1    6.00000000000000E-1

LoadCaseCombination     296   "SLE_21"
   1    1    1.00000000000000E+0
   2    1    1.00000000000000E+0
   3    1    1.00000000000000E+0
   5    1    1.00000000000000E+0
   11    1    6.00000000000000E-1

LoadCaseCombination     297   "SLE_22"
   1    1    1.00000000000000E+0
   2    1    1.00000000000000E+0
   4    1    1.00000000000000E+0
   5    1    1.00000000000000E+0
   11    1    6.00000000000000E-1

LoadCaseCombination     298   "SLE_23"
   1    1    1.00000000000000E+0
   2    1    1.00000000000000E+0
   3    1    1.00000000000000E+0
   5    1    1.00000000000000E+0
   12    1    6.00000000000000E-1

LoadCaseCombination     299   "SLE_24"
   1    1    1.00000000000000E+0
   2    1    1.00000000000000E+0
   4    1    1.00000000000000E+0
   5    1    1.00000000000000E+0
   12    1    6.00000000000000E-1

LoadCaseCombination     300   "SLE_25"
   1    1    1.00000000000000E+0
   2    1    1.00000000000000E+0
   3    1    1.00000000000000E+0
   5    1    1.00000000000000E+0
   7    1    6.00000000000000E-1
   11    1    6.00000000000000E-1

LoadCaseCombination     301   "SLE_26"
   1    1    1.00000000000000E+0
   2    1    1.00000000000000E+0
   4    1    1.00000000000000E+0
   5    1    1.00000000000000E+0
   7    1    6.00000000000000E-1
   11    1    6.00000000000000E-1
```

```
LoadCaseCombination     302   "SLE_27"
   1    1    1.00000000000000E+0
   2    1    1.00000000000000E+0
   3    1    1.00000000000000E+0
   5    1    1.00000000000000E+0
   9    1    6.00000000000000E-1
   12    1    6.00000000000000E-1

LoadCaseCombination     303   "SLE_28"
   1    1    1.00000000000000E+0
   2    1    1.00000000000000E+0
   4    1    1.00000000000000E+0
   5    1    1.00000000000000E+0
   9    1    6.00000000000000E-1
   12    1    6.00000000000000E-1

LoadCaseCombination     304   "SLE_29"
   1    1    1.00000000000000E+0
   2    1    1.00000000000000E+0
   3    1    1.00000000000000E+0
   6    1    1.00000000000000E+0
   7    1    6.00000000000000E-1

LoadCaseCombination     305   "SLE_30"
   1    1    1.00000000000000E+0
   2    1    1.00000000000000E+0
   4    1    1.00000000000000E+0
   6    1    1.00000000000000E+0
   7    1    6.00000000000000E-1

LoadCaseCombination     306   "SLE_31"
   1    1    1.00000000000000E+0
   2    1    1.00000000000000E+0
   3    1    1.00000000000000E+0
   6    1    1.00000000000000E+0
   9    1    6.00000000000000E-1

LoadCaseCombination     307   "SLE_32"
   1    1    1.00000000000000E+0
   2    1    1.00000000000000E+0
   4    1    1.00000000000000E+0
   6    1    1.00000000000000E+0
   9    1    6.00000000000000E-1

LoadCaseCombination     308   "SLE_33"
   1    1    1.00000000000000E+0
   2    1    1.00000000000000E+0
   3    1    1.00000000000000E+0
   6    1    1.00000000000000E+0
   8    1    8.00000000000000E-1

LoadCaseCombination     309   "SLE_34"
   1    1    1.00000000000000E+0
```

```
   2    1    1.00000000000000E+0
   4    1    1.00000000000000E+0
   6    1    1.00000000000000E+0
   8    1    8.00000000000000E-1

LoadCaseCombination     310   "SLE_35"
   1    1    1.00000000000000E+0
   2    1    1.00000000000000E+0
   3    1    1.00000000000000E+0
   6    1    1.00000000000000E+0
   10    1    8.00000000000000E-1

LoadCaseCombination     311   "SLE_36"
   1    1    1.00000000000000E+0
   2    1    1.00000000000000E+0
   4    1    1.00000000000000E+0
   6    1    1.00000000000000E+0
   10    1    8.00000000000000E-1

LoadCaseCombination     312   "SLE_37"
   1    1    1.00000000000000E+0
   2    1    1.00000000000000E+0
   3    1    1.00000000000000E+0
   6    1    1.00000000000000E+0
   11    1    6.00000000000000E-1

LoadCaseCombination     313   "SLE_38"
   1    1    1.00000000000000E+0
   2    1    1.00000000000000E+0
   4    1    1.00000000000000E+0
   6    1    1.00000000000000E+0
   11    1    6.00000000000000E-1

LoadCaseCombination     314   "SLE_39"
   1    1    1.00000000000000E+0
   2    1    1.00000000000000E+0
   3    1    1.00000000000000E+0
   6    1    1.00000000000000E+0
   12    1    6.00000000000000E-1

LoadCaseCombination     315   "SLE_40"
   1    1    1.00000000000000E+0
   2    1    1.00000000000000E+0
   4    1    1.00000000000000E+0
   6    1    1.00000000000000E+0
   12    1    6.00000000000000E-1

LoadCaseCombination     316   "SLE_41"
   1    1    1.00000000000000E+0
   2    1    1.00000000000000E+0
   3    1    1.00000000000000E+0
   6    1    1.00000000000000E+0
   7    1    6.00000000000000E-1
   8    1    8.00000000000000E-1
```

```
LoadCaseCombination     317   "SLE_42"
   1    1    1.00000000000000E+0
   2    1    1.00000000000000E+0
   4    1    1.00000000000000E+0
   6    1    1.00000000000000E+0
   7    1    6.00000000000000E-1
   8    1    8.00000000000000E-1

LoadCaseCombination     318   "SLE_43"
   1    1    1.00000000000000E+0
   2    1    1.00000000000000E+0
   3    1    1.00000000000000E+0
   6    1    1.00000000000000E+0
   9    1    6.00000000000000E-1
   10    1    8.00000000000000E-1

LoadCaseCombination     319   "SLE_44"
   1    1    1.00000000000000E+0
   2    1    1.00000000000000E+0
   4    1    1.00000000000000E+0
   6    1    1.00000000000000E+0
   9    1    6.00000000000000E-1
   10    1    8.00000000000000E-1

LoadCaseCombination     320   "SLE_45"
   1    1    1.00000000000000E+0
   2    1    1.00000000000000E+0
   3    1    1.00000000000000E+0
   6    1    1.00000000000000E+0
   7    1    6.00000000000000E-1
   11    1    6.00000000000000E-1

LoadCaseCombination     321   "SLE_46"
   1    1    1.00000000000000E+0
   2    1    1.00000000000000E+0
   4    1    1.00000000000000E+0
   6    1    1.00000000000000E+0
   7    1    6.00000000000000E-1
   11    1    6.00000000000000E-1

LoadCaseCombination     322   "SLE_47"
   1    1    1.00000000000000E+0
   2    1    1.00000000000000E+0
   3    1    1.00000000000000E+0
   6    1    1.00000000000000E+0
   9    1    6.00000000000000E-1
   12    1    6.00000000000000E-1

LoadCaseCombination     323   "SLE_48"
   1    1    1.00000000000000E+0
   2    1    1.00000000000000E+0
   4    1    1.00000000000000E+0
   6    1    1.00000000000000E+0
```

```
   9    1    6.00000000000000E-1
   12    1    6.00000000000000E-1

LoadCaseCombination     324   "SLE_49"
   1    1    1.00000000000000E+0
   2    1    1.00000000000000E+0
   3    1    1.00000000000000E+0
   6    1    1.00000000000000E+0
   8    1    8.00000000000000E-1
   11    1    6.00000000000000E-1

LoadCaseCombination     325   "SLE_50"
   1    1    1.00000000000000E+0
   2    1    1.00000000000000E+0
   4    1    1.00000000000000E+0
   6    1    1.00000000000000E+0
   8    1    8.00000000000000E-1
   11    1    6.00000000000000E-1

LoadCaseCombination     326   "SLE_51"
   1    1    1.00000000000000E+0
   2    1    1.00000000000000E+0
   3    1    1.00000000000000E+0
   6    1    1.00000000000000E+0
   10    1    8.00000000000000E-1
   12    1    6.00000000000000E-1

LoadCaseCombination     327   "SLE_52"
   1    1    1.00000000000000E+0
   2    1    1.00000000000000E+0
   4    1    1.00000000000000E+0
   6    1    1.00000000000000E+0
   10    1    8.00000000000000E-1
   12    1    6.00000000000000E-1

LoadCaseCombination     328   "SLE_53"
   1    1    1.00000000000000E+0
   2    1    1.00000000000000E+0
   3    1    1.00000000000000E+0
   6    1    1.00000000000000E+0
   7    1    6.00000000000000E-1
   8    1    8.00000000000000E-1
   11    1    6.00000000000000E-1

LoadCaseCombination     329   "SLE_54"
   1    1    1.00000000000000E+0
   2    1    1.00000000000000E+0
   4    1    1.00000000000000E+0
   6    1    1.00000000000000E+0
   7    1    6.00000000000000E-1
   8    1    8.00000000000000E-1
   11    1    6.00000000000000E-1

LoadCaseCombination     330   "SLE_55"
```

```
   1    1    1.00000000000000E+0
   2    1    1.00000000000000E+0
   3    1    1.00000000000000E+0
   6    1    1.00000000000000E+0
   9    1    6.00000000000000E-1
   10    1    8.00000000000000E-1
   12    1    6.00000000000000E-1

LoadCaseCombination     331   "SLE_56"
   1    1    1.00000000000000E+0
   2    1    1.00000000000000E+0
   4    1    1.00000000000000E+0
   6    1    1.00000000000000E+0
   9    1    6.00000000000000E-1
   10    1    8.00000000000000E-1
   12    1    6.00000000000000E-1

LoadCaseCombination     332   "SLE_57"
   1    1    1.00000000000000E+0
   2    1    1.00000000000000E+0
   3    1    1.00000000000000E+0
   6    1    7.00000000000000E-1
   7    1    1.00000000000000E+0

LoadCaseCombination     333   "SLE_58"
   1    1    1.00000000000000E+0
   2    1    1.00000000000000E+0
   4    1    1.00000000000000E+0
   6    1    7.00000000000000E-1
   7    1    1.00000000000000E+0

LoadCaseCombination     334   "SLE_59"
   1    1    1.00000000000000E+0
   2    1    1.00000000000000E+0
   3    1    1.00000000000000E+0
   6    1    7.00000000000000E-1
   9    1    1.00000000000000E+0

LoadCaseCombination     335   "SLE_60"
   1    1    1.00000000000000E+0
   2    1    1.00000000000000E+0
   4    1    1.00000000000000E+0
   6    1    7.00000000000000E-1
   9    1    1.00000000000000E+0

LoadCaseCombination     336   "SLE_61"
   1    1    1.00000000000000E+0
   2    1    1.00000000000000E+0
   3    1    1.00000000000000E+0
   7    1    1.00000000000000E+0
   8    1    8.00000000000000E-1

LoadCaseCombination     337   "SLE_62"
   1    1    1.00000000000000E+0
```

```
   2    1    1.00000000000000E+0
   4    1    1.00000000000000E+0
   7    1    1.00000000000000E+0
   8    1    8.00000000000000E-1

LoadCaseCombination     338   "SLE_63"
   1    1    1.00000000000000E+0
   2    1    1.00000000000000E+0
   3    1    1.00000000000000E+0
   9    1    1.00000000000000E+0
   8    1    8.00000000000000E-1

LoadCaseCombination     339   "SLE_64"
   1    1    1.00000000000000E+0
   2    1    1.00000000000000E+0
   4    1    1.00000000000000E+0
   9    1    1.00000000000000E+0
   8    1    8.00000000000000E-1

LoadCaseCombination     340   "SLE_65"
   1    1    1.00000000000000E+0
   2    1    1.00000000000000E+0
   3    1    1.00000000000000E+0
   7    1    1.00000000000000E+0
   10    1    8.00000000000000E-1

LoadCaseCombination     341   "SLE_66"
   1    1    1.00000000000000E+0
   2    1    1.00000000000000E+0
   4    1    1.00000000000000E+0
   7    1    1.00000000000000E+0
   10    1    8.00000000000000E-1

LoadCaseCombination     342   "SLE_67"
   1    1    1.00000000000000E+0
   2    1    1.00000000000000E+0
   3    1    1.00000000000000E+0
   9    1    1.00000000000000E+0
   10    1    8.00000000000000E-1

LoadCaseCombination     343   "SLE_68"
   1    1    1.00000000000000E+0
   2    1    1.00000000000000E+0
   4    1    1.00000000000000E+0
   9    1    1.00000000000000E+0
   10    1    8.00000000000000E-1

LoadCaseCombination     344   "SLE_69"
   1    1    1.00000000000000E+0
   2    1    1.00000000000000E+0
   3    1    1.00000000000000E+0
   7    1    1.00000000000000E+0
   11    1    6.00000000000000E-1
```

```
LoadCaseCombination     345   "SLE_70"
   1    1    1.00000000000000E+0
   2    1    1.00000000000000E+0
   4    1    1.00000000000000E+0
   7    1    1.00000000000000E+0
   11    1    6.00000000000000E-1

LoadCaseCombination     346   "SLE_71"
   1    1    1.00000000000000E+0
   2    1    1.00000000000000E+0
   3    1    1.00000000000000E+0
   9    1    1.00000000000000E+0
   11    1    6.00000000000000E-1

LoadCaseCombination     347   "SLE_72"
   1    1    1.00000000000000E+0
   2    1    1.00000000000000E+0
   4    1    1.00000000000000E+0
   9    1    1.00000000000000E+0
   11    1    6.00000000000000E-1

LoadCaseCombination     348   "SLE_73"
   1    1    1.00000000000000E+0
   2    1    1.00000000000000E+0
   3    1    1.00000000000000E+0
   7    1    1.00000000000000E+0
   12    1    6.00000000000000E-1

LoadCaseCombination     349   "SLE_74"
   1    1    1.00000000000000E+0
   2    1    1.00000000000000E+0
   4    1    1.00000000000000E+0
   7    1    1.00000000000000E+0
   12    1    6.00000000000000E-1

LoadCaseCombination     350   "SLE_75"
   1    1    1.00000000000000E+0
   2    1    1.00000000000000E+0
   3    1    1.00000000000000E+0
   9    1    1.00000000000000E+0
   12    1    6.00000000000000E-1

LoadCaseCombination     351   "SLE_76"
   1    1    1.00000000000000E+0
   2    1    1.00000000000000E+0
   4    1    1.00000000000000E+0
   9    1    1.00000000000000E+0
   12    1    6.00000000000000E-1

LoadCaseCombination     352   "SLE_77"
   1    1    1.00000000000000E+0
   2    1    1.00000000000000E+0
   3    1    1.00000000000000E+0
   6    1    7.00000000000000E-1
```

```
   7    1    1.00000000000000E+0
   8    1    8.00000000000000E-1

LoadCaseCombination     353   "SLE_78"
   1    1    1.00000000000000E+0
   2    1    1.00000000000000E+0
   4    1    1.00000000000000E+0
   6    1    7.00000000000000E-1
   7    1    1.00000000000000E+0
   8    1    8.00000000000000E-1

LoadCaseCombination     354   "SLE_79"
   1    1    1.00000000000000E+0
   2    1    1.00000000000000E+0
   3    1    1.00000000000000E+0
   6    1    7.00000000000000E-1
   9    1    1.00000000000000E+0
   8    1    8.00000000000000E-1

LoadCaseCombination     355   "SLE_80"
   1    1    1.00000000000000E+0
   2    1    1.00000000000000E+0
   4    1    1.00000000000000E+0
   6    1    7.00000000000000E-1
   9    1    1.00000000000000E+0
   8    1    8.00000000000000E-1

LoadCaseCombination     356   "SLE_81"
   1    1    1.00000000000000E+0
   2    1    1.00000000000000E+0
   3    1    1.00000000000000E+0
   6    1    7.00000000000000E-1
   7    1    1.00000000000000E+0
   10    1    8.00000000000000E-1

LoadCaseCombination     357   "SLE_82"
   1    1    1.00000000000000E+0
   2    1    1.00000000000000E+0
   4    1    1.00000000000000E+0
   6    1    7.00000000000000E-1
   7    1    1.00000000000000E+0
   10    1    8.00000000000000E-1

LoadCaseCombination     358   "SLE_83"
   1    1    1.00000000000000E+0
   2    1    1.00000000000000E+0
   3    1    1.00000000000000E+0
   6    1    7.00000000000000E-1
   9    1    1.00000000000000E+0
   10    1    8.00000000000000E-1

LoadCaseCombination     359   "SLE_84"
   1    1    1.00000000000000E+0
   2    1    1.00000000000000E+0
```

```
   4    1    1.00000000000000E+0
   6    1    7.00000000000000E-1
   9    1    1.00000000000000E+0
   10    1    8.00000000000000E-1

LoadCaseCombination     360   "SLE_85"
   1    1    1.00000000000000E+0
   2    1    1.00000000000000E+0
   3    1    1.00000000000000E+0
   6    1    7.00000000000000E-1
   7    1    1.00000000000000E+0
   11    1    6.00000000000000E-1

LoadCaseCombination     361   "SLE_86"
   1    1    1.00000000000000E+0
   2    1    1.00000000000000E+0
   4    1    1.00000000000000E+0
   6    1    7.00000000000000E-1
   7    1    1.00000000000000E+0
   11    1    6.00000000000000E-1

LoadCaseCombination     362   "SLE_87"
   1    1    1.00000000000000E+0
   2    1    1.00000000000000E+0
   3    1    1.00000000000000E+0
   6    1    7.00000000000000E-1
   9    1    1.00000000000000E+0
   11    1    6.00000000000000E-1

LoadCaseCombination     363   "SLE_88"
   1    1    1.00000000000000E+0
   2    1    1.00000000000000E+0
   4    1    1.00000000000000E+0
   6    1    7.00000000000000E-1
   9    1    1.00000000000000E+0
   11    1    6.00000000000000E-1

LoadCaseCombination     364   "SLE_89"
   1    1    1.00000000000000E+0
   2    1    1.00000000000000E+0
   3    1    1.00000000000000E+0
   6    1    7.00000000000000E-1
   7    1    1.00000000000000E+0
   12    1    6.00000000000000E-1

LoadCaseCombination     365   "SLE_90"
   1    1    1.00000000000000E+0
   2    1    1.00000000000000E+0
   4    1    1.00000000000000E+0
   6    1    7.00000000000000E-1
   7    1    1.00000000000000E+0
   12    1    6.00000000000000E-1

LoadCaseCombination     366   "SLE_91"
```

```
   1    1    1.00000000000000E+0
   2    1    1.00000000000000E+0
   3    1    1.00000000000000E+0
   6    1    7.00000000000000E-1
   9    1    1.00000000000000E+0
   12    1    6.00000000000000E-1

LoadCaseCombination     367   "SLE_92"
   1    1    1.00000000000000E+0
   2    1    1.00000000000000E+0
   4    1    1.00000000000000E+0
   6    1    7.00000000000000E-1
   9    1    1.00000000000000E+0
   12    1    6.00000000000000E-1

LoadCaseCombination     368   "SLE_93"
   1    1    1.00000000000000E+0
   2    1    1.00000000000000E+0
   3    1    1.00000000000000E+0
   7    1    1.00000000000000E+0
   8    1    8.00000000000000E-1
   11    1    6.00000000000000E-1

LoadCaseCombination     369   "SLE_94"
   1    1    1.00000000000000E+0
   2    1    1.00000000000000E+0
   4    1    1.00000000000000E+0
   7    1    1.00000000000000E+0
   8    1    8.00000000000000E-1
   11    1    6.00000000000000E-1

LoadCaseCombination     370   "SLE_95"
   1    1    1.00000000000000E+0
   2    1    1.00000000000000E+0
   3    1    1.00000000000000E+0
   9    1    1.00000000000000E+0
   8    1    8.00000000000000E-1
   11    1    6.00000000000000E-1

LoadCaseCombination     371   "SLE_96"
   1    1    1.00000000000000E+0
   2    1    1.00000000000000E+0
   4    1    1.00000000000000E+0
   9    1    1.00000000000000E+0
   8    1    8.00000000000000E-1
   11    1    6.00000000000000E-1

LoadCaseCombination     372   "SLE_97"
   1    1    1.00000000000000E+0
   2    1    1.00000000000000E+0
   3    1    1.00000000000000E+0
   7    1    1.00000000000000E+0
   8    1    8.00000000000000E-1
   12    1    6.00000000000000E-1
```

```
LoadCaseCombination     373   "SLE_98"
   1    1    1.00000000000000E+0
   2    1    1.00000000000000E+0
   4    1    1.00000000000000E+0
   7    1    1.00000000000000E+0
   8    1    8.00000000000000E-1
   12    1    6.00000000000000E-1

LoadCaseCombination     374   "SLE_99"
   1    1    1.00000000000000E+0
   2    1    1.00000000000000E+0
   3    1    1.00000000000000E+0
   9    1    1.00000000000000E+0
   8    1    8.00000000000000E-1
   12    1    6.00000000000000E-1

LoadCaseCombination     375   "SLE_100"
   1    1    1.00000000000000E+0
   2    1    1.00000000000000E+0
   4    1    1.00000000000000E+0
   9    1    1.00000000000000E+0
   8    1    8.00000000000000E-1
   12    1    6.00000000000000E-1

LoadCaseCombination     376   "SLE_101"
   1    1    1.00000000000000E+0
   2    1    1.00000000000000E+0
   3    1    1.00000000000000E+0
   7    1    1.00000000000000E+0
   10    1    8.00000000000000E-1
   11    1    6.00000000000000E-1

LoadCaseCombination     377   "SLE_102"
   1    1    1.00000000000000E+0
   2    1    1.00000000000000E+0
   4    1    1.00000000000000E+0
   7    1    1.00000000000000E+0
   10    1    8.00000000000000E-1
   11    1    6.00000000000000E-1

LoadCaseCombination     378   "SLE_103"
   1    1    1.00000000000000E+0
   2    1    1.00000000000000E+0
   3    1    1.00000000000000E+0
   9    1    1.00000000000000E+0
   10    1    8.00000000000000E-1
   11    1    6.00000000000000E-1

LoadCaseCombination     379   "SLE_104"
   1    1    1.00000000000000E+0
   2    1    1.00000000000000E+0
   4    1    1.00000000000000E+0
   9    1    1.00000000000000E+0
```

```
   10    1    8.00000000000000E-1
   11    1    6.00000000000000E-1

LoadCaseCombination     380   "SLE_105"
   1    1    1.00000000000000E+0
   2    1    1.00000000000000E+0
   3    1    1.00000000000000E+0
   7    1    1.00000000000000E+0
   10    1    8.00000000000000E-1
   12    1    6.00000000000000E-1

LoadCaseCombination     381   "SLE_106"
   1    1    1.00000000000000E+0
   2    1    1.00000000000000E+0
   4    1    1.00000000000000E+0
   7    1    1.00000000000000E+0
   10    1    8.00000000000000E-1
   12    1    6.00000000000000E-1

LoadCaseCombination     382   "SLE_107"
   1    1    1.00000000000000E+0
   2    1    1.00000000000000E+0
   3    1    1.00000000000000E+0
   9    1    1.00000000000000E+0
   10    1    8.00000000000000E-1
   12    1    6.00000000000000E-1

LoadCaseCombination     383   "SLE_108"
   1    1    1.00000000000000E+0
   2    1    1.00000000000000E+0
   4    1    1.00000000000000E+0
   9    1    1.00000000000000E+0
   10    1    8.00000000000000E-1
   12    1    6.00000000000000E-1

LoadCaseCombination     384   "SLE_109"
   1    1    1.00000000000000E+0
   2    1    1.00000000000000E+0
   3    1    1.00000000000000E+0
   6    1    7.00000000000000E-1
   7    1    1.00000000000000E+0
   8    1    8.00000000000000E-1
   11    1    6.00000000000000E-1

LoadCaseCombination     385   "SLE_110"
   1    1    1.00000000000000E+0
   2    1    1.00000000000000E+0
   4    1    1.00000000000000E+0
   6    1    7.00000000000000E-1
   7    1    1.00000000000000E+0
   8    1    8.00000000000000E-1
   11    1    6.00000000000000E-1

LoadCaseCombination     386   "SLE_111"
```

```
   1    1    1.00000000000000E+0
   2    1    1.00000000000000E+0
   3    1    1.00000000000000E+0
   6    1    7.00000000000000E-1
   9    1    1.00000000000000E+0
   8    1    8.00000000000000E-1
   11    1    6.00000000000000E-1

LoadCaseCombination     387   "SLE_112"
   1    1    1.00000000000000E+0
   2    1    1.00000000000000E+0
   4    1    1.00000000000000E+0
   6    1    7.00000000000000E-1
   9    1    1.00000000000000E+0
   8    1    8.00000000000000E-1
   11    1    6.00000000000000E-1

LoadCaseCombination     388   "SLE_113"
   1    1    1.00000000000000E+0
   2    1    1.00000000000000E+0
   3    1    1.00000000000000E+0
   6    1    7.00000000000000E-1
   7    1    1.00000000000000E+0
   8    1    8.00000000000000E-1
   12    1    6.00000000000000E-1

LoadCaseCombination     389   "SLE_114"
   1    1    1.00000000000000E+0
   2    1    1.00000000000000E+0
   4    1    1.00000000000000E+0
   6    1    7.00000000000000E-1
   7    1    1.00000000000000E+0
   8    1    8.00000000000000E-1
   12    1    6.00000000000000E-1

LoadCaseCombination     390   "SLE_115"
   1    1    1.00000000000000E+0
   2    1    1.00000000000000E+0
   3    1    1.00000000000000E+0
   6    1    7.00000000000000E-1
   9    1    1.00000000000000E+0
   8    1    8.00000000000000E-1
   12    1    6.00000000000000E-1

LoadCaseCombination     391   "SLE_116"
   1    1    1.00000000000000E+0
   2    1    1.00000000000000E+0
   4    1    1.00000000000000E+0
   6    1    7.00000000000000E-1
   9    1    1.00000000000000E+0
   8    1    8.00000000000000E-1
   12    1    6.00000000000000E-1

LoadCaseCombination     392   "SLE_117"
```

```
   1    1    1.00000000000000E+0
   2    1    1.00000000000000E+0
   3    1    1.00000000000000E+0
   6    1    7.00000000000000E-1
   7    1    1.00000000000000E+0
   10    1    8.00000000000000E-1
   11    1    6.00000000000000E-1

LoadCaseCombination     393   "SLE_118"
   1    1    1.00000000000000E+0
   2    1    1.00000000000000E+0
   4    1    1.00000000000000E+0
   6    1    7.00000000000000E-1
   7    1    1.00000000000000E+0
   10    1    8.00000000000000E-1
   11    1    6.00000000000000E-1

LoadCaseCombination     394   "SLE_119"
   1    1    1.00000000000000E+0
   2    1    1.00000000000000E+0
   3    1    1.00000000000000E+0
   6    1    7.00000000000000E-1
   9    1    1.00000000000000E+0
   10    1    8.00000000000000E-1
   11    1    6.00000000000000E-1

LoadCaseCombination     395   "SLE_120"
   1    1    1.00000000000000E+0
   2    1    1.00000000000000E+0
   4    1    1.00000000000000E+0
   6    1    7.00000000000000E-1
   9    1    1.00000000000000E+0
   10    1    8.00000000000000E-1
   11    1    6.00000000000000E-1

LoadCaseCombination     396   "SLE_121"
   1    1    1.00000000000000E+0
   2    1    1.00000000000000E+0
   3    1    1.00000000000000E+0
   6    1    7.00000000000000E-1
   7    1    1.00000000000000E+0
   10    1    8.00000000000000E-1
   12    1    6.00000000000000E-1

LoadCaseCombination     397   "SLE_122"
   1    1    1.00000000000000E+0
   2    1    1.00000000000000E+0
   4    1    1.00000000000000E+0
   6    1    7.00000000000000E-1
   7    1    1.00000000000000E+0
   10    1    8.00000000000000E-1
   12    1    6.00000000000000E-1

LoadCaseCombination     398   "SLE_123"
```

```
   1    1    1.00000000000000E+0
   2    1    1.00000000000000E+0
   3    1    1.00000000000000E+0
   6    1    7.00000000000000E-1
   9    1    1.00000000000000E+0
   10    1    8.00000000000000E-1
   12    1    6.00000000000000E-1

LoadCaseCombination     399   "SLE_124"
   1    1    1.00000000000000E+0
   2    1    1.00000000000000E+0
   4    1    1.00000000000000E+0
   6    1    7.00000000000000E-1
   9    1    1.00000000000000E+0
   10    1    8.00000000000000E-1
   12    1    6.00000000000000E-1

LoadCaseCombination     400   "SLE_125"
   1    1    1.00000000000000E+0
   2    1    1.00000000000000E+0
   3    1    1.00000000000000E+0
   6    1    7.00000000000000E-1
   8    1    1.00000000000000E+0

LoadCaseCombination     401   "SLE_126"
   1    1    1.00000000000000E+0
   2    1    1.00000000000000E+0
   4    1    1.00000000000000E+0
   6    1    7.00000000000000E-1
   8    1    1.00000000000000E+0

LoadCaseCombination     402   "SLE_127"
   1    1    1.00000000000000E+0
   2    1    1.00000000000000E+0
   3    1    1.00000000000000E+0
   6    1    7.00000000000000E-1
   10    1    1.00000000000000E+0

LoadCaseCombination     403   "SLE_128"
   1    1    1.00000000000000E+0
   2    1    1.00000000000000E+0
   4    1    1.00000000000000E+0
   6    1    7.00000000000000E-1
   10    1    1.00000000000000E+0

LoadCaseCombination     404   "SLE_129"
   1    1    1.00000000000000E+0
   2    1    1.00000000000000E+0
   3    1    1.00000000000000E+0
   7    1    6.00000000000000E-1
   8    1    1.00000000000000E+0

LoadCaseCombination     405   "SLE_130"
   1    1    1.00000000000000E+0
```

```
   2    1    1.00000000000000E+0
   4    1    1.00000000000000E+0
   7    1    6.00000000000000E-1
   8    1    1.00000000000000E+0

LoadCaseCombination     406   "SLE_131"
   1    1    1.00000000000000E+0
   2    1    1.00000000000000E+0
   3    1    1.00000000000000E+0
   9    1    6.00000000000000E-1
   8    1    1.00000000000000E+0

LoadCaseCombination     407   "SLE_132"
   1    1    1.00000000000000E+0
   2    1    1.00000000000000E+0
   4    1    1.00000000000000E+0
   9    1    6.00000000000000E-1
   8    1    1.00000000000000E+0

LoadCaseCombination     408   "SLE_133"
   1    1    1.00000000000000E+0
   2    1    1.00000000000000E+0
   3    1    1.00000000000000E+0
   7    1    6.00000000000000E-1
   10    1    1.00000000000000E+0

LoadCaseCombination     409   "SLE_134"
   1    1    1.00000000000000E+0
   2    1    1.00000000000000E+0
   4    1    1.00000000000000E+0
   7    1    6.00000000000000E-1
   10    1    1.00000000000000E+0

LoadCaseCombination     410   "SLE_135"
   1    1    1.00000000000000E+0
   2    1    1.00000000000000E+0
   3    1    1.00000000000000E+0
   9    1    6.00000000000000E-1
   10    1    1.00000000000000E+0

LoadCaseCombination     411   "SLE_136"
   1    1    1.00000000000000E+0
   2    1    1.00000000000000E+0
   4    1    1.00000000000000E+0
   9    1    6.00000000000000E-1
   10    1    1.00000000000000E+0

LoadCaseCombination     412   "SLE_137"
   1    1    1.00000000000000E+0
   2    1    1.00000000000000E+0
   3    1    1.00000000000000E+0
   8    1    1.00000000000000E+0
   11    1    6.00000000000000E-1
```

```
LoadCaseCombination     413   "SLE_138"
   1    1    1.00000000000000E+0
   2    1    1.00000000000000E+0
   4    1    1.00000000000000E+0
   8    1    1.00000000000000E+0
   11    1    6.00000000000000E-1

LoadCaseCombination     414   "SLE_139"
   1    1    1.00000000000000E+0
   2    1    1.00000000000000E+0
   3    1    1.00000000000000E+0
   8    1    1.00000000000000E+0
   11    1    6.00000000000000E-1

LoadCaseCombination     415   "SLE_140"
   1    1    1.00000000000000E+0
   2    1    1.00000000000000E+0
   4    1    1.00000000000000E+0
   8    1    1.00000000000000E+0
   11    1    6.00000000000000E-1

LoadCaseCombination     416   "SLE_141"
   1    1    1.00000000000000E+0
   2    1    1.00000000000000E+0
   3    1    1.00000000000000E+0
   10    1    1.00000000000000E+0
   12    1    6.00000000000000E-1

LoadCaseCombination     417   "SLE_142"
   1    1    1.00000000000000E+0
   2    1    1.00000000000000E+0
   4    1    1.00000000000000E+0
   10    1    1.00000000000000E+0
   12    1    6.00000000000000E-1

LoadCaseCombination     418   "SLE_143"
   1    1    1.00000000000000E+0
   2    1    1.00000000000000E+0
   3    1    1.00000000000000E+0
   10    1    1.00000000000000E+0
   12    1    6.00000000000000E-1

LoadCaseCombination     419   "SLE_144"
   1    1    1.00000000000000E+0
   2    1    1.00000000000000E+0
   4    1    1.00000000000000E+0
   10    1    1.00000000000000E+0
   12    1    6.00000000000000E-1

LoadCaseCombination     420   "SLE_145"
   1    1    1.00000000000000E+0
   2    1    1.00000000000000E+0
   3    1    1.00000000000000E+0
   6    1    7.00000000000000E-1
```

```
   7    1    6.00000000000000E-1
   8    1    1.00000000000000E+0

LoadCaseCombination     421   "SLE_146"
   1    1    1.00000000000000E+0
   2    1    1.00000000000000E+0
   4    1    1.00000000000000E+0
   6    1    7.00000000000000E-1
   7    1    6.00000000000000E-1
   8    1    1.00000000000000E+0

LoadCaseCombination     422   "SLE_147"
   1    1    1.00000000000000E+0
   2    1    1.00000000000000E+0
   3    1    1.00000000000000E+0
   6    1    7.00000000000000E-1
   9    1    6.00000000000000E-1
   8    1    1.00000000000000E+0

LoadCaseCombination     423   "SLE_148"
   1    1    1.00000000000000E+0
   2    1    1.00000000000000E+0
   4    1    1.00000000000000E+0
   6    1    7.00000000000000E-1
   9    1    6.00000000000000E-1
   8    1    1.00000000000000E+0

LoadCaseCombination     424   "SLE_149"
   1    1    1.00000000000000E+0
   2    1    1.00000000000000E+0
   3    1    1.00000000000000E+0
   6    1    7.00000000000000E-1
   7    1    6.00000000000000E-1
   10    1    1.00000000000000E+0

LoadCaseCombination     425   "SLE_150"
   1    1    1.00000000000000E+0
   2    1    1.00000000000000E+0
   4    1    1.00000000000000E+0
   6    1    7.00000000000000E-1
   7    1    6.00000000000000E-1
   10    1    1.00000000000000E+0

LoadCaseCombination     426   "SLE_151"
   1    1    1.00000000000000E+0
   2    1    1.00000000000000E+0
   3    1    1.00000000000000E+0
   6    1    7.00000000000000E-1
   9    1    6.00000000000000E-1
   10    1    1.00000000000000E+0

LoadCaseCombination     427   "SLE_152"
   1    1    1.00000000000000E+0
   2    1    1.00000000000000E+0
```

```
   4    1    1.00000000000000E+0
   6    1    7.00000000000000E-1
   9    1    6.00000000000000E-1
   10    1    1.00000000000000E+0

LoadCaseCombination     428   "SLE_153"
   1    1    1.00000000000000E+0
   2    1    1.00000000000000E+0
   3    1    1.00000000000000E+0
   6    1    7.00000000000000E-1
   8    1    1.00000000000000E+0
   11    1    6.00000000000000E-1

LoadCaseCombination     429   "SLE_154"
   1    1    1.00000000000000E+0
   2    1    1.00000000000000E+0
   4    1    1.00000000000000E+0
   6    1    7.00000000000000E-1
   8    1    1.00000000000000E+0
   11    1    6.00000000000000E-1

LoadCaseCombination     430   "SLE_155"
   1    1    1.00000000000000E+0
   2    1    1.00000000000000E+0
   3    1    1.00000000000000E+0
   6    1    7.00000000000000E-1
   8    1    1.00000000000000E+0
   11    1    6.00000000000000E-1

LoadCaseCombination     431   "SLE_156"
   1    1    1.00000000000000E+0
   2    1    1.00000000000000E+0
   4    1    1.00000000000000E+0
   6    1    7.00000000000000E-1
   8    1    1.00000000000000E+0
   11    1    6.00000000000000E-1

LoadCaseCombination     432   "SLE_157"
   1    1    1.00000000000000E+0
   2    1    1.00000000000000E+0
   3    1    1.00000000000000E+0
   6    1    7.00000000000000E-1
   10    1    1.00000000000000E+0
   12    1    6.00000000000000E-1

LoadCaseCombination     433   "SLE_158"
   1    1    1.00000000000000E+0
   2    1    1.00000000000000E+0
   4    1    1.00000000000000E+0
   6    1    7.00000000000000E-1
   10    1    1.00000000000000E+0
   12    1    6.00000000000000E-1

LoadCaseCombination     434   "SLE_159"
```

```
   1    1    1.00000000000000E+0
   2    1    1.00000000000000E+0
   3    1    1.00000000000000E+0
   6    1    7.00000000000000E-1
   10    1    1.00000000000000E+0
   12    1    6.00000000000000E-1

LoadCaseCombination     435   "SLE_160"
   1    1    1.00000000000000E+0
   2    1    1.00000000000000E+0
   4    1    1.00000000000000E+0
   6    1    7.00000000000000E-1
   10    1    1.00000000000000E+0
   12    1    6.00000000000000E-1

LoadCaseCombination     436   "SLE_161"
   1    1    1.00000000000000E+0
   2    1    1.00000000000000E+0
   3    1    1.00000000000000E+0
   7    1    6.00000000000000E-1
   8    1    1.00000000000000E+0
   11    1    6.00000000000000E-1

LoadCaseCombination     437   "SLE_162"
   1    1    1.00000000000000E+0
   2    1    1.00000000000000E+0
   4    1    1.00000000000000E+0
   7    1    6.00000000000000E-1
   8    1    1.00000000000000E+0
   11    1    6.00000000000000E-1

LoadCaseCombination     438   "SLE_163"
   1    1    1.00000000000000E+0
   2    1    1.00000000000000E+0
   3    1    1.00000000000000E+0
   9    1    6.00000000000000E-1
   8    1    1.00000000000000E+0
   11    1    6.00000000000000E-1

LoadCaseCombination     439   "SLE_164"
   1    1    1.00000000000000E+0
   2    1    1.00000000000000E+0
   4    1    1.00000000000000E+0
   9    1    6.00000000000000E-1
   8    1    1.00000000000000E+0
   11    1    6.00000000000000E-1

LoadCaseCombination     440   "SLE_165"
   1    1    1.00000000000000E+0
   2    1    1.00000000000000E+0
   3    1    1.00000000000000E+0
   7    1    6.00000000000000E-1
   8    1    1.00000000000000E+0
   12    1    6.00000000000000E-1
```

```
LoadCaseCombination     441   "SLE_166"
   1    1    1.00000000000000E+0
   2    1    1.00000000000000E+0
   4    1    1.00000000000000E+0
   7    1    6.00000000000000E-1
   8    1    1.00000000000000E+0
   12    1    6.00000000000000E-1

LoadCaseCombination     442   "SLE_167"
   1    1    1.00000000000000E+0
   2    1    1.00000000000000E+0
   3    1    1.00000000000000E+0
   9    1    6.00000000000000E-1
   8    1    1.00000000000000E+0
   12    1    6.00000000000000E-1

LoadCaseCombination     443   "SLE_168"
   1    1    1.00000000000000E+0
   2    1    1.00000000000000E+0
   4    1    1.00000000000000E+0
   9    1    6.00000000000000E-1
   8    1    1.00000000000000E+0
   12    1    6.00000000000000E-1

LoadCaseCombination     444   "SLE_169"
   1    1    1.00000000000000E+0
   2    1    1.00000000000000E+0
   3    1    1.00000000000000E+0
   7    1    6.00000000000000E-1
   10    1    1.00000000000000E+0
   11    1    6.00000000000000E-1

LoadCaseCombination     445   "SLE_170"
   1    1    1.00000000000000E+0
   2    1    1.00000000000000E+0
   4    1    1.00000000000000E+0
   7    1    6.00000000000000E-1
   10    1    1.00000000000000E+0
   11    1    6.00000000000000E-1

LoadCaseCombination     446   "SLE_171"
   1    1    1.00000000000000E+0
   2    1    1.00000000000000E+0
   3    1    1.00000000000000E+0
   9    1    6.00000000000000E-1
   10    1    1.00000000000000E+0
   11    1    6.00000000000000E-1

LoadCaseCombination     447   "SLE_172"
   1    1    1.00000000000000E+0
   2    1    1.00000000000000E+0
   4    1    1.00000000000000E+0
   9    1    6.00000000000000E-1
```

```
   10    1    1.00000000000000E+0
   11    1    6.00000000000000E-1

LoadCaseCombination     448   "SLE_173"
   1    1    1.00000000000000E+0
   2    1    1.00000000000000E+0
   3    1    1.00000000000000E+0
   7    1    6.00000000000000E-1
   10    1    1.00000000000000E+0
   12    1    6.00000000000000E-1

LoadCaseCombination     449   "SLE_174"
   1    1    1.00000000000000E+0
   2    1    1.00000000000000E+0
   4    1    1.00000000000000E+0
   7    1    6.00000000000000E-1
   10    1    1.00000000000000E+0
   12    1    6.00000000000000E-1

LoadCaseCombination     450   "SLE_175"
   1    1    1.00000000000000E+0
   2    1    1.00000000000000E+0
   3    1    1.00000000000000E+0
   9    1    6.00000000000000E-1
   10    1    1.00000000000000E+0
   12    1    6.00000000000000E-1

LoadCaseCombination     451   "SLE_176"
   1    1    1.00000000000000E+0
   2    1    1.00000000000000E+0
   4    1    1.00000000000000E+0
   9    1    6.00000000000000E-1
   10    1    1.00000000000000E+0
   12    1    6.00000000000000E-1

LoadCaseCombination     452   "SLE_177"
   1    1    1.00000000000000E+0
   2    1    1.00000000000000E+0
   3    1    1.00000000000000E+0
   6    1    7.00000000000000E-1
   7    1    6.00000000000000E-1
   8    1    1.00000000000000E+0
   11    1    6.00000000000000E-1

LoadCaseCombination     453   "SLE_178"
   1    1    1.00000000000000E+0
   2    1    1.00000000000000E+0
   4    1    1.00000000000000E+0
   6    1    7.00000000000000E-1
   7    1    6.00000000000000E-1
   8    1    1.00000000000000E+0
   11    1    6.00000000000000E-1

LoadCaseCombination     454   "SLE_179"
```

```
   1    1    1.00000000000000E+0
   2    1    1.00000000000000E+0
   3    1    1.00000000000000E+0
   6    1    7.00000000000000E-1
   9    1    6.00000000000000E-1
   8    1    1.00000000000000E+0
   11    1    6.00000000000000E-1

LoadCaseCombination     455   "SLE_180"
   1    1    1.00000000000000E+0
   2    1    1.00000000000000E+0
   4    1    1.00000000000000E+0
   6    1    7.00000000000000E-1
   9    1    6.00000000000000E-1
   8    1    1.00000000000000E+0
   11    1    6.00000000000000E-1

LoadCaseCombination     456   "SLE_181"
   1    1    1.00000000000000E+0
   2    1    1.00000000000000E+0
   3    1    1.00000000000000E+0
   6    1    7.00000000000000E-1
   7    1    6.00000000000000E-1
   8    1    1.00000000000000E+0
   12    1    6.00000000000000E-1

LoadCaseCombination     457   "SLE_182"
   1    1    1.00000000000000E+0
   2    1    1.00000000000000E+0
   4    1    1.00000000000000E+0
   6    1    7.00000000000000E-1
   7    1    6.00000000000000E-1
   8    1    1.00000000000000E+0
   12    1    6.00000000000000E-1

LoadCaseCombination     458   "SLE_183"
   1    1    1.00000000000000E+0
   2    1    1.00000000000000E+0
   3    1    1.00000000000000E+0
   6    1    7.00000000000000E-1
   9    1    6.00000000000000E-1
   8    1    1.00000000000000E+0
   12    1    6.00000000000000E-1

LoadCaseCombination     459   "SLE_184"
   1    1    1.00000000000000E+0
   2    1    1.00000000000000E+0
   4    1    1.00000000000000E+0
   6    1    7.00000000000000E-1
   9    1    6.00000000000000E-1
   8    1    1.00000000000000E+0
   12    1    6.00000000000000E-1

LoadCaseCombination     460   "SLE_185"
```

```
   1    1    1.00000000000000E+0
   2    1    1.00000000000000E+0
   3    1    1.00000000000000E+0
   6    1    7.00000000000000E-1
   7    1    6.00000000000000E-1
   10    1    1.00000000000000E+0
   11    1    6.00000000000000E-1

LoadCaseCombination     461   "SLE_186"
   1    1    1.00000000000000E+0
   2    1    1.00000000000000E+0
   4    1    1.00000000000000E+0
   6    1    7.00000000000000E-1
   7    1    6.00000000000000E-1
   10    1    1.00000000000000E+0
   11    1    6.00000000000000E-1

LoadCaseCombination     462   "SLE_187"
   1    1    1.00000000000000E+0
   2    1    1.00000000000000E+0
   3    1    1.00000000000000E+0
   6    1    7.00000000000000E-1
   9    1    6.00000000000000E-1
   10    1    1.00000000000000E+0
   11    1    6.00000000000000E-1

LoadCaseCombination     463   "SLE_188"
   1    1    1.00000000000000E+0
   2    1    1.00000000000000E+0
   4    1    1.00000000000000E+0
   6    1    7.00000000000000E-1
   9    1    6.00000000000000E-1
   10    1    1.00000000000000E+0
   11    1    6.00000000000000E-1

LoadCaseCombination     464   "SLE_189"
   1    1    1.00000000000000E+0
   2    1    1.00000000000000E+0
   3    1    1.00000000000000E+0
   6    1    7.00000000000000E-1
   7    1    6.00000000000000E-1
   10    1    1.00000000000000E+0
   12    1    6.00000000000000E-1

LoadCaseCombination     465   "SLE_190"
   1    1    1.00000000000000E+0
   2    1    1.00000000000000E+0
   4    1    1.00000000000000E+0
   6    1    7.00000000000000E-1
   7    1    6.00000000000000E-1
   10    1    1.00000000000000E+0
   12    1    6.00000000000000E-1

LoadCaseCombination     466   "SLE_191"
```

```
   1    1    1.00000000000000E+0
   2    1    1.00000000000000E+0
   3    1    1.00000000000000E+0
   6    1    7.00000000000000E-1
   9    1    6.00000000000000E-1
   10    1    1.00000000000000E+0
   12    1    6.00000000000000E-1

LoadCaseCombination     467   "SLE_192"
   1    1    1.00000000000000E+0
   2    1    1.00000000000000E+0
   4    1    1.00000000000000E+0
   6    1    7.00000000000000E-1
   9    1    6.00000000000000E-1
   10    1    1.00000000000000E+0
   12    1    6.00000000000000E-1

LoadCaseCombination     468   "SLE_193"
   1    1    1.00000000000000E+0
   2    1    1.00000000000000E+0
   3    1    1.00000000000000E+0
   6    1    7.00000000000000E-1
   11    1    1.00000000000000E+0

LoadCaseCombination     469   "SLE_194"
   1    1    1.00000000000000E+0
   2    1    1.00000000000000E+0
   4    1    1.00000000000000E+0
   6    1    7.00000000000000E-1
   11    1    1.00000000000000E+0

LoadCaseCombination     470   "SLE_195"
   1    1    1.00000000000000E+0
   2    1    1.00000000000000E+0
   3    1    1.00000000000000E+0
   6    1    7.00000000000000E-1
   12    1    1.00000000000000E+0

LoadCaseCombination     471   "SLE_196"
   1    1    1.00000000000000E+0
   2    1    1.00000000000000E+0
   4    1    1.00000000000000E+0
   6    1    7.00000000000000E-1
   12    1    1.00000000000000E+0

LoadCaseCombination     472   "SLE_197"
   1    1    1.00000000000000E+0
   2    1    1.00000000000000E+0
   3    1    1.00000000000000E+0
   7    1    6.00000000000000E-1
   11    1    1.00000000000000E+0

LoadCaseCombination     473   "SLE_198"
   1    1    1.00000000000000E+0
```

```
   2    1    1.00000000000000E+0
   4    1    1.00000000000000E+0
   7    1    6.00000000000000E-1
   11    1    1.00000000000000E+0

LoadCaseCombination     474   "SLE_199"
   1    1    1.00000000000000E+0
   2    1    1.00000000000000E+0
   3    1    1.00000000000000E+0
   9    1    6.00000000000000E-1
   11    1    1.00000000000000E+0

LoadCaseCombination     475   "SLE_200"
   1    1    1.00000000000000E+0
   2    1    1.00000000000000E+0
   4    1    1.00000000000000E+0
   9    1    6.00000000000000E-1
   11    1    1.00000000000000E+0

LoadCaseCombination     476   "SLE_201"
   1    1    1.00000000000000E+0
   2    1    1.00000000000000E+0
   3    1    1.00000000000000E+0
   7    1    6.00000000000000E-1
   12    1    1.00000000000000E+0

LoadCaseCombination     477   "SLE_202"
   1    1    1.00000000000000E+0
   2    1    1.00000000000000E+0
   4    1    1.00000000000000E+0
   7    1    6.00000000000000E-1
   12    1    1.00000000000000E+0

LoadCaseCombination     478   "SLE_203"
   1    1    1.00000000000000E+0
   2    1    1.00000000000000E+0
   3    1    1.00000000000000E+0
   9    1    6.00000000000000E-1
   12    1    1.00000000000000E+0

LoadCaseCombination     479   "SLE_204"
   1    1    1.00000000000000E+0
   2    1    1.00000000000000E+0
   4    1    1.00000000000000E+0
   9    1    6.00000000000000E-1
   12    1    1.00000000000000E+0

LoadCaseCombination     480   "SLE_205"
   1    1    1.00000000000000E+0
   2    1    1.00000000000000E+0
   3    1    1.00000000000000E+0
   8    1    8.00000000000000E-1
   11    1    1.00000000000000E+0
```

```
LoadCaseCombination     481   "SLE_206"
   1    1    1.00000000000000E+0
   2    1    1.00000000000000E+0
   4    1    1.00000000000000E+0
   8    1    8.00000000000000E-1
   11    1    1.00000000000000E+0

LoadCaseCombination     482   "SLE_207"
   1    1    1.00000000000000E+0
   2    1    1.00000000000000E+0
   3    1    1.00000000000000E+0
   8    1    8.00000000000000E-1
   11    1    1.00000000000000E+0

LoadCaseCombination     483   "SLE_208"
   1    1    1.00000000000000E+0
   2    1    1.00000000000000E+0
   4    1    1.00000000000000E+0
   8    1    8.00000000000000E-1
   11    1    1.00000000000000E+0

LoadCaseCombination     484   "SLE_209"
   1    1    1.00000000000000E+0
   2    1    1.00000000000000E+0
   3    1    1.00000000000000E+0
   10    1    8.00000000000000E-1
   12    1    1.00000000000000E+0

LoadCaseCombination     485   "SLE_210"
   1    1    1.00000000000000E+0
   2    1    1.00000000000000E+0
   4    1    1.00000000000000E+0
   10    1    8.00000000000000E-1
   12    1    1.00000000000000E+0

LoadCaseCombination     486   "SLE_211"
   1    1    1.00000000000000E+0
   2    1    1.00000000000000E+0
   3    1    1.00000000000000E+0
   10    1    8.00000000000000E-1
   12    1    1.00000000000000E+0

LoadCaseCombination     487   "SLE_212"
   1    1    1.00000000000000E+0
   2    1    1.00000000000000E+0
   4    1    1.00000000000000E+0
   10    1    8.00000000000000E-1
   12    1    1.00000000000000E+0

LoadCaseCombination     488   "SLE_213"
   1    1    1.00000000000000E+0
   2    1    1.00000000000000E+0
   3    1    1.00000000000000E+0
   6    1    7.00000000000000E-1
```

```
   7    1    6.00000000000000E-1
   11    1    1.00000000000000E+0

LoadCaseCombination     489   "SLE_214"
   1    1    1.00000000000000E+0
   2    1    1.00000000000000E+0
   4    1    1.00000000000000E+0
   6    1    7.00000000000000E-1
   7    1    6.00000000000000E-1
   11    1    1.00000000000000E+0

LoadCaseCombination     490   "SLE_215"
   1    1    1.00000000000000E+0
   2    1    1.00000000000000E+0
   3    1    1.00000000000000E+0
   6    1    7.00000000000000E-1
   9    1    6.00000000000000E-1
   11    1    1.00000000000000E+0

LoadCaseCombination     491   "SLE_216"
   1    1    1.00000000000000E+0
   2    1    1.00000000000000E+0
   4    1    1.00000000000000E+0
   6    1    7.00000000000000E-1
   9    1    6.00000000000000E-1
   11    1    1.00000000000000E+0

LoadCaseCombination     492   "SLE_217"
   1    1    1.00000000000000E+0
   2    1    1.00000000000000E+0
   3    1    1.00000000000000E+0
   6    1    7.00000000000000E-1
   7    1    6.00000000000000E-1
   12    1    1.00000000000000E+0

LoadCaseCombination     493   "SLE_218"
   1    1    1.00000000000000E+0
   2    1    1.00000000000000E+0
   4    1    1.00000000000000E+0
   6    1    7.00000000000000E-1
   7    1    6.00000000000000E-1
   12    1    1.00000000000000E+0

LoadCaseCombination     494   "SLE_219"
   1    1    1.00000000000000E+0
   2    1    1.00000000000000E+0
   3    1    1.00000000000000E+0
   6    1    7.00000000000000E-1
   9    1    6.00000000000000E-1
   12    1    1.00000000000000E+0

LoadCaseCombination     495   "SLE_220"
   1    1    1.00000000000000E+0
   2    1    1.00000000000000E+0
```

```
   4    1    1.00000000000000E+0
   6    1    7.00000000000000E-1
   9    1    6.00000000000000E-1
   12    1    1.00000000000000E+0

LoadCaseCombination     496   "SLE_221"
   1    1    1.00000000000000E+0
   2    1    1.00000000000000E+0
   3    1    1.00000000000000E+0
   6    1    7.00000000000000E-1
   8    1    8.00000000000000E-1
   11    1    1.00000000000000E+0

LoadCaseCombination     497   "SLE_222"
   1    1    1.00000000000000E+0
   2    1    1.00000000000000E+0
   4    1    1.00000000000000E+0
   6    1    7.00000000000000E-1
   8    1    8.00000000000000E-1
   11    1    1.00000000000000E+0

LoadCaseCombination     498   "SLE_223"
   1    1    1.00000000000000E+0
   2    1    1.00000000000000E+0
   3    1    1.00000000000000E+0
   6    1    7.00000000000000E-1
   8    1    8.00000000000000E-1
   11    1    1.00000000000000E+0

LoadCaseCombination     499   "SLE_224"
   1    1    1.00000000000000E+0
   2    1    1.00000000000000E+0
   4    1    1.00000000000000E+0
   6    1    7.00000000000000E-1
   8    1    8.00000000000000E-1
   11    1    1.00000000000000E+0

LoadCaseCombination     500   "SLE_225"
   1    1    1.00000000000000E+0
   2    1    1.00000000000000E+0
   3    1    1.00000000000000E+0
   6    1    7.00000000000000E-1
   10    1    8.00000000000000E-1
   12    1    1.00000000000000E+0

LoadCaseCombination     501   "SLE_226"
   1    1    1.00000000000000E+0
   2    1    1.00000000000000E+0
   4    1    1.00000000000000E+0
   6    1    7.00000000000000E-1
   10    1    8.00000000000000E-1
   12    1    1.00000000000000E+0

LoadCaseCombination     502   "SLE_227"
```

```
   1    1    1.00000000000000E+0
   2    1    1.00000000000000E+0
   3    1    1.00000000000000E+0
   6    1    7.00000000000000E-1
   10    1    8.00000000000000E-1
   12    1    1.00000000000000E+0

LoadCaseCombination     503   "SLE_228"
   1    1    1.00000000000000E+0
   2    1    1.00000000000000E+0
   4    1    1.00000000000000E+0
   6    1    7.00000000000000E-1
   10    1    8.00000000000000E-1
   12    1    1.00000000000000E+0

LoadCaseCombination     504   "SLE_229"
   1    1    1.00000000000000E+0
   2    1    1.00000000000000E+0
   3    1    1.00000000000000E+0
   7    1    6.00000000000000E-1
   8    1    8.00000000000000E-1
   11    1    1.00000000000000E+0

LoadCaseCombination     505   "SLE_230"
   1    1    1.00000000000000E+0
   2    1    1.00000000000000E+0
   4    1    1.00000000000000E+0
   7    1    6.00000000000000E-1
   8    1    8.00000000000000E-1
   11    1    1.00000000000000E+0

LoadCaseCombination     506   "SLE_231"
   1    1    1.00000000000000E+0
   2    1    1.00000000000000E+0
   3    1    1.00000000000000E+0
   9    1    6.00000000000000E-1
   8    1    8.00000000000000E-1
   11    1    1.00000000000000E+0

LoadCaseCombination     507   "SLE_232"
   1    1    1.00000000000000E+0
   2    1    1.00000000000000E+0
   4    1    1.00000000000000E+0
   9    1    6.00000000000000E-1
   8    1    8.00000000000000E-1
   11    1    1.00000000000000E+0

LoadCaseCombination     508   "SLE_233"
   1    1    1.00000000000000E+0
   2    1    1.00000000000000E+0
   3    1    1.00000000000000E+0
   7    1    6.00000000000000E-1
   8    1    8.00000000000000E-1
   12    1    1.00000000000000E+0
```

```
LoadCaseCombination     509   "SLE_234"
   1    1    1.00000000000000E+0
   2    1    1.00000000000000E+0
   4    1    1.00000000000000E+0
   7    1    6.00000000000000E-1
   8    1    8.00000000000000E-1
   12    1    1.00000000000000E+0

LoadCaseCombination     510   "SLE_235"
   1    1    1.00000000000000E+0
   2    1    1.00000000000000E+0
   3    1    1.00000000000000E+0
   9    1    6.00000000000000E-1
   8    1    8.00000000000000E-1
   12    1    1.00000000000000E+0

LoadCaseCombination     511   "SLE_236"
   1    1    1.00000000000000E+0
   2    1    1.00000000000000E+0
   4    1    1.00000000000000E+0
   9    1    6.00000000000000E-1
   8    1    8.00000000000000E-1
   12    1    1.00000000000000E+0

LoadCaseCombination     512   "SLE_237"
   1    1    1.00000000000000E+0
   2    1    1.00000000000000E+0
   3    1    1.00000000000000E+0
   7    1    6.00000000000000E-1
   10    1    8.00000000000000E-1
   11    1    1.00000000000000E+0

LoadCaseCombination     513   "SLE_238"
   1    1    1.00000000000000E+0
   2    1    1.00000000000000E+0
   4    1    1.00000000000000E+0
   7    1    6.00000000000000E-1
   10    1    8.00000000000000E-1
   11    1    1.00000000000000E+0

LoadCaseCombination     514   "SLE_239"
   1    1    1.00000000000000E+0
   2    1    1.00000000000000E+0
   3    1    1.00000000000000E+0
   9    1    6.00000000000000E-1
   10    1    8.00000000000000E-1
   11    1    1.00000000000000E+0

LoadCaseCombination     515   "SLE_240"
   1    1    1.00000000000000E+0
   2    1    1.00000000000000E+0
   4    1    1.00000000000000E+0
   9    1    6.00000000000000E-1
```

```
   10    1    8.00000000000000E-1
   11    1    1.00000000000000E+0

LoadCaseCombination     516   "SLE_241"
   1    1    1.00000000000000E+0
   2    1    1.00000000000000E+0
   3    1    1.00000000000000E+0
   7    1    6.00000000000000E-1
   10    1    8.00000000000000E-1
   12    1    1.00000000000000E+0

LoadCaseCombination     517   "SLE_242"
   1    1    1.00000000000000E+0
   2    1    1.00000000000000E+0
   4    1    1.00000000000000E+0
   7    1    6.00000000000000E-1
   10    1    8.00000000000000E-1
   12    1    1.00000000000000E+0

LoadCaseCombination     518   "SLE_243"
   1    1    1.00000000000000E+0
   2    1    1.00000000000000E+0
   3    1    1.00000000000000E+0
   9    1    6.00000000000000E-1
   10    1    8.00000000000000E-1
   12    1    1.00000000000000E+0

LoadCaseCombination     519   "SLE_244"
   1    1    1.00000000000000E+0
   2    1    1.00000000000000E+0
   4    1    1.00000000000000E+0
   9    1    6.00000000000000E-1
   10    1    8.00000000000000E-1
   12    1    1.00000000000000E+0

LoadCaseCombination     520   "SLE_245"
   1    1    1.00000000000000E+0
   2    1    1.00000000000000E+0
   3    1    1.00000000000000E+0
   6    1    7.00000000000000E-1
   7    1    6.00000000000000E-1
   8    1    8.00000000000000E-1
   11    1    1.00000000000000E+0

LoadCaseCombination     521   "SLE_246"
   1    1    1.00000000000000E+0
   2    1    1.00000000000000E+0
   4    1    1.00000000000000E+0
   6    1    7.00000000000000E-1
   7    1    6.00000000000000E-1
   8    1    8.00000000000000E-1
   11    1    1.00000000000000E+0

LoadCaseCombination     522   "SLE_247"
```

```
   1    1    1.00000000000000E+0
   2    1    1.00000000000000E+0
   3    1    1.00000000000000E+0
   6    1    7.00000000000000E-1
   9    1    6.00000000000000E-1
   8    1    8.00000000000000E-1
   11    1    1.00000000000000E+0

LoadCaseCombination     523   "SLE_248"
   1    1    1.00000000000000E+0
   2    1    1.00000000000000E+0
   4    1    1.00000000000000E+0
   6    1    7.00000000000000E-1
   9    1    6.00000000000000E-1
   8    1    8.00000000000000E-1
   11    1    1.00000000000000E+0

LoadCaseCombination     524   "SLE_249"
   1    1    1.00000000000000E+0
   2    1    1.00000000000000E+0
   3    1    1.00000000000000E+0
   6    1    7.00000000000000E-1
   7    1    6.00000000000000E-1
   8    1    8.00000000000000E-1
   12    1    1.00000000000000E+0

LoadCaseCombination     525   "SLE_250"
   1    1    1.00000000000000E+0
   2    1    1.00000000000000E+0
   4    1    1.00000000000000E+0
   6    1    7.00000000000000E-1
   7    1    6.00000000000000E-1
   8    1    8.00000000000000E-1
   12    1    1.00000000000000E+0

LoadCaseCombination     526   "SLE_251"
   1    1    1.00000000000000E+0
   2    1    1.00000000000000E+0
   3    1    1.00000000000000E+0
   6    1    7.00000000000000E-1
   9    1    6.00000000000000E-1
   8    1    8.00000000000000E-1
   12    1    1.00000000000000E+0

LoadCaseCombination     527   "SLE_252"
   1    1    1.00000000000000E+0
   2    1    1.00000000000000E+0
   4    1    1.00000000000000E+0
   6    1    7.00000000000000E-1
   9    1    6.00000000000000E-1
   8    1    8.00000000000000E-1
   12    1    1.00000000000000E+0

LoadCaseCombination     528   "SLE_253"
```

```
   1    1    1.00000000000000E+0
   2    1    1.00000000000000E+0
   3    1    1.00000000000000E+0
   6    1    7.00000000000000E-1
   7    1    6.00000000000000E-1
   10    1    8.00000000000000E-1
   11    1    1.00000000000000E+0

LoadCaseCombination     529   "SLE_254"
   1    1    1.00000000000000E+0
   2    1    1.00000000000000E+0
   4    1    1.00000000000000E+0
   6    1    7.00000000000000E-1
   7    1    6.00000000000000E-1
   10    1    8.00000000000000E-1
   11    1    1.00000000000000E+0

LoadCaseCombination     530   "SLE_255"
   1    1    1.00000000000000E+0
   2    1    1.00000000000000E+0
   3    1    1.00000000000000E+0
   6    1    7.00000000000000E-1
   9    1    6.00000000000000E-1
   10    1    8.00000000000000E-1
   11    1    1.00000000000000E+0

LoadCaseCombination     531   "SLE_256"
   1    1    1.00000000000000E+0
   2    1    1.00000000000000E+0
   4    1    1.00000000000000E+0
   6    1    7.00000000000000E-1
   9    1    6.00000000000000E-1
   10    1    8.00000000000000E-1
   11    1    1.00000000000000E+0

LoadCaseCombination     532   "SLE_257"
   1    1    1.00000000000000E+0
   2    1    1.00000000000000E+0
   3    1    1.00000000000000E+0
   6    1    7.00000000000000E-1
   7    1    6.00000000000000E-1
   10    1    8.00000000000000E-1
   12    1    1.00000000000000E+0

LoadCaseCombination     533   "SLE_258"
   1    1    1.00000000000000E+0
   2    1    1.00000000000000E+0
   4    1    1.00000000000000E+0
   6    1    7.00000000000000E-1
   7    1    6.00000000000000E-1
   10    1    8.00000000000000E-1
   12    1    1.00000000000000E+0

LoadCaseCombination     534   "SLE_259"
```

```
   1    1    1.00000000000000E+0
   2    1    1.00000000000000E+0
   3    1    1.00000000000000E+0
   6    1    7.00000000000000E-1
   9    1    6.00000000000000E-1
   10    1    8.00000000000000E-1
   12    1    1.00000000000000E+0

LoadCaseCombination     535   "SLE_260"
   1    1    1.00000000000000E+0
   2    1    1.00000000000000E+0
   4    1    1.00000000000000E+0
   6    1    7.00000000000000E-1
   9    1    6.00000000000000E-1
   10    1    8.00000000000000E-1
   12    1    1.00000000000000E+0

LoadCaseCombination     536   "FASE 1 (G1)-SLE"
   1    1    1.00000000000000E+0
   2    1    1.00000000000000E+0

LoadCaseCombination     537   "FASE 2 (G2)-SLE"
   3    1    1.00000000000000E+0

LoadCaseCombination     538   "FASE 3 (Qk)-SLE_39"
   6    1    1.00000000000000E+0
   12    1    6.00000000000000E-1

LoadCaseCombination     539   "FASE 1 (G1)-SLU"
   1    1    1.35000000000000E+0
   2    1    1.35000000000000E+0

LoadCaseCombination     540   "FASE 2 (G2)-SLU"
   3    1    1.50000000000000E+0

LoadCaseCombination     541   "FASE 3 (Qk)-SLU_39"
   6    1    1.50000000000000E+0
   12    1    9.00000000000000E-1

LoadCaseCombination     542   "SLV-X"
   1    1    1.00000000000000E+0
   2    1    1.00000000000000E+0
   3    1    1.00000000000000E+0

LoadCaseCombination     543   "SLV-Y"
   1    1    1.00000000000000E+0
   2    1    1.00000000000000E+0
   3    1    1.00000000000000E+0

LoadCaseCombination     544   "SLC-X"
   1    1    1.00000000000000E+0
   2    1    1.00000000000000E+0
   3    1    1.00000000000000E+0
```

```
   LoadCaseCombination     545   "SLC-Y"
      1    1    1.00000000000000E+0
      2    1    1.00000000000000E+0
      3    1    1.00000000000000E+0


/ ____________________________________________________________________________
/ RESULT CASE ENVELOPES

   LoadCaseEnvelope     "SLU min"  Min
   ON                      13       1
   ON                      14       1
   ON                      15       1
   ON                      16       1
   ON                      17       1
   ON                      18       1
   ON                      19       1
   ON                      20       1
   ON                      21       1
   ON                      22       1
   ON                      23       1
   ON                      24       1
   ON                      25       1
   ON                      26       1
   ON                      27       1
   ON                      28       1
   ON                      29       1
   ON                      30       1
   ON                      31       1
   ON                      32       1
   ON                      33       1
   ON                      34       1
   ON                      35       1
   ON                      36       1
   ON                      37       1
   ON                      38       1
   ON                      39       1
   ON                      40       1
   ON                      41       1
   ON                      42       1
   ON                      43       1
   ON                      44       1
   ON                      45       1
   ON                      46       1
   ON                      47       1
   ON                      48       1
   ON                      49       1
   ON                      50       1
   ON                      51       1
   ON                      52       1
   ON                      53       1
   ON                      54       1
   ON                      55       1
   ON                      56       1
```

ON	57	1
ON	58	1
ON	59	1
ON	60	1
ON	61	1
ON	62	1
ON	63	1
ON	64	1
ON	65	1
ON	66	1
ON	67	1
ON	68	1
ON	69	1
ON	70	1
ON	71	1
ON	72	1
ON	73	1
ON	74	1
ON	75	1
ON	76	1
ON	77	1
ON	78	1
ON	79	1
ON	80	1
ON	81	1
ON	82	1
ON	83	1
ON	84	1
ON	85	1
ON	86	1
ON	87	1
ON	88	1
ON	89	1
ON	90	1
ON	91	1
ON	92	1
ON	93	1
ON	94	1
ON	95	1
ON	96	1
ON	97	1
ON	98	1
ON	99	1
ON	100	1
ON	101	1
ON	102	1
ON	103	1
ON	104	1
ON	105	1
ON	106	1
ON	107	1
ON	108	1
ON	109	1
ON	110	1

ON	111	1
ON	112	1
ON	113	1
ON	114	1
ON	115	1
ON	116	1
ON	117	1
ON	118	1
ON	119	1
ON	120	1
ON	121	1
ON	122	1
ON	123	1
ON	124	1
ON	125	1
ON	126	1
ON	127	1
ON	128	1
ON	129	1
ON	130	1
ON	131	1
ON	132	1
ON	133	1
ON	134	1
ON	135	1
ON	136	1
ON	137	1
ON	138	1
ON	139	1
ON	140	1
ON	141	1
ON	142	1
ON	143	1
ON	144	1
ON	145	1
ON	146	1
ON	147	1
ON	148	1
ON	149	1
ON	150	1
ON	151	1
ON	152	1
ON	153	1
ON	154	1
ON	155	1
ON	156	1
ON	157	1
ON	158	1
ON	159	1
ON	160	1
ON	161	1
ON	162	1
ON	163	1
ON	164	1

ON	165	1
ON	166	1
ON	167	1
ON	168	1
ON	169	1
ON	170	1
ON	171	1
ON	172	1
ON	173	1
ON	174	1
ON	175	1
ON	176	1
ON	177	1
ON	178	1
ON	179	1
ON	180	1
ON	181	1
ON	182	1
ON	183	1
ON	184	1
ON	185	1
ON	186	1
ON	187	1
ON	188	1
ON	189	1
ON	190	1
ON	191	1
ON	192	1
ON	193	1
ON	194	1
ON	195	1
ON	196	1
ON	197	1
ON	198	1
ON	199	1
ON	200	1
ON	201	1
ON	202	1
ON	203	1
ON	204	1
ON	205	1
ON	206	1
ON	207	1
ON	208	1
ON	209	1
ON	210	1
ON	211	1
ON	212	1
ON	213	1
ON	214	1
ON	215	1
ON	216	1
ON	217	1
ON	218	1

ON	219	1
ON	220	1
ON	221	1
ON	222	1
ON	223	1
ON	224	1
ON	225	1
ON	226	1
ON	227	1
ON	228	1
ON	229	1
ON	230	1
ON	231	1
ON	232	1
ON	233	1
ON	234	1
ON	235	1
ON	236	1
ON	237	1
ON	238	1
ON	239	1
ON	240	1
ON	241	1
ON	242	1
ON	243	1
ON	244	1
ON	245	1
ON	246	1
ON	247	1
ON	248	1
ON	249	1
ON	250	1
ON	251	1
ON	252	1
ON	253	1
ON	254	1
ON	255	1
ON	256	1
ON	257	1
ON	258	1
ON	259	1
ON	260	1
ON	261	1
ON	262	1
ON	263	1
ON	264	1
ON	265	1
ON	266	1
ON	267	1
ON	268	1
ON	269	1
ON	270	1
ON	271	1
ON	272	1

ON	273	1
ON	274	1

LoadCaseEnvelope	"SLU max"	Max
ON	13	1
ON	14	1
ON	15	1
ON	16	1
ON	17	1
ON	18	1
ON	19	1
ON	20	1
ON	21	1
ON	22	1
ON	23	1
ON	24	1
ON	25	1
ON	26	1
ON	27	1
ON	28	1
ON	29	1
ON	30	1
ON	31	1
ON	32	1
ON	33	1
ON	34	1
ON	35	1
ON	36	1
ON	37	1
ON	38	1
ON	39	1
ON	40	1
ON	41	1
ON	42	1
ON	43	1
ON	44	1
ON	45	1
ON	46	1
ON	47	1
ON	48	1
ON	49	1
ON	50	1
ON	51	1
ON	52	1
ON	53	1
ON	54	1
ON	55	1
ON	56	1
ON	57	1
ON	58	1
ON	59	1
ON	60	1
ON	61	1
ON	62	1

ON	63	1
ON	64	1
ON	65	1
ON	66	1
ON	67	1
ON	68	1
ON	69	1
ON	70	1
ON	71	1
ON	72	1
ON	73	1
ON	74	1
ON	75	1
ON	76	1
ON	77	1
ON	78	1
ON	79	1
ON	80	1
ON	81	1
ON	82	1
ON	83	1
ON	84	1
ON	85	1
ON	86	1
ON	87	1
ON	88	1
ON	89	1
ON	90	1
ON	91	1
ON	92	1
ON	93	1
ON	94	1
ON	95	1
ON	96	1
ON	97	1
ON	98	1
ON	99	1
ON	100	1
ON	101	1
ON	102	1
ON	103	1
ON	104	1
ON	105	1
ON	106	1
ON	107	1
ON	108	1
ON	109	1
ON	110	1
ON	111	1
ON	112	1
ON	113	1
ON	114	1
ON	115	1
ON	116	1

ON	117	1
ON	118	1
ON	119	1
ON	120	1
ON	121	1
ON	122	1
ON	123	1
ON	124	1
ON	125	1
ON	126	1
ON	127	1
ON	128	1
ON	129	1
ON	130	1
ON	131	1
ON	132	1
ON	133	1
ON	134	1
ON	135	1
ON	136	1
ON	137	1
ON	138	1
ON	139	1
ON	140	1
ON	141	1
ON	142	1
ON	143	1
ON	144	1
ON	145	1
ON	146	1
ON	147	1
ON	148	1
ON	149	1
ON	150	1
ON	151	1
ON	152	1
ON	153	1
ON	154	1
ON	155	1
ON	156	1
ON	157	1
ON	158	1
ON	159	1
ON	160	1
ON	161	1
ON	162	1
ON	163	1
ON	164	1
ON	165	1
ON	166	1
ON	167	1
ON	168	1
ON	169	1
ON	170	1

ON	171	1
ON	172	1
ON	173	1
ON	174	1
ON	175	1
ON	176	1
ON	177	1
ON	178	1
ON	179	1
ON	180	1
ON	181	1
ON	182	1
ON	183	1
ON	184	1
ON	185	1
ON	186	1
ON	187	1
ON	188	1
ON	189	1
ON	190	1
ON	191	1
ON	192	1
ON	193	1
ON	194	1
ON	195	1
ON	196	1
ON	197	1
ON	198	1
ON	199	1
ON	200	1
ON	201	1
ON	202	1
ON	203	1
ON	204	1
ON	205	1
ON	206	1
ON	207	1
ON	208	1
ON	209	1
ON	210	1
ON	211	1
ON	212	1
ON	213	1
ON	214	1
ON	215	1
ON	216	1
ON	217	1
ON	218	1
ON	219	1
ON	220	1
ON	221	1
ON	222	1
ON	223	1
ON	224	1

ON	225	1
ON	226	1
ON	227	1
ON	228	1
ON	229	1
ON	230	1
ON	231	1
ON	232	1
ON	233	1
ON	234	1
ON	235	1
ON	236	1
ON	237	1
ON	238	1
ON	239	1
ON	240	1
ON	241	1
ON	242	1
ON	243	1
ON	244	1
ON	245	1
ON	246	1
ON	247	1
ON	248	1
ON	249	1
ON	250	1
ON	251	1
ON	252	1
ON	253	1
ON	254	1
ON	255	1
ON	256	1
ON	257	1
ON	258	1
ON	259	1
ON	260	1
ON	261	1
ON	262	1
ON	263	1
ON	264	1
ON	265	1
ON	266	1
ON	267	1
ON	268	1
ON	269	1
ON	270	1
ON	271	1
ON	272	1
ON	273	1
ON	274	1

LoadCaseEnvelope	"SLE min"	Min
ON	275	1
ON	276	1

ON	277	1
ON	278	1
ON	279	1
ON	280	1
ON	281	1
ON	282	1
ON	283	1
ON	284	1
ON	285	1
ON	286	1
ON	287	1
ON	288	1
ON	289	1
ON	290	1
ON	291	1
ON	292	1
ON	293	1
ON	294	1
ON	295	1
ON	296	1
ON	297	1
ON	298	1
ON	299	1
ON	300	1
ON	301	1
ON	302	1
ON	303	1
ON	304	1
ON	305	1
ON	306	1
ON	307	1
ON	308	1
ON	309	1
ON	310	1
ON	311	1
ON	312	1
ON	313	1
ON	314	1
ON	315	1
ON	316	1
ON	317	1
ON	318	1
ON	319	1
ON	320	1
ON	321	1
ON	322	1
ON	323	1
ON	324	1
ON	325	1
ON	326	1
ON	327	1
ON	328	1
ON	329	1
ON	330	1

ON	331	1
ON	332	1
ON	333	1
ON	334	1
ON	335	1
ON	336	1
ON	337	1
ON	338	1
ON	339	1
ON	340	1
ON	341	1
ON	342	1
ON	343	1
ON	344	1
ON	345	1
ON	346	1
ON	347	1
ON	348	1
ON	349	1
ON	350	1
ON	351	1
ON	352	1
ON	353	1
ON	354	1
ON	355	1
ON	356	1
ON	357	1
ON	358	1
ON	359	1
ON	360	1
ON	361	1
ON	362	1
ON	363	1
ON	364	1
ON	365	1
ON	366	1
ON	367	1
ON	368	1
ON	369	1
ON	370	1
ON	371	1
ON	372	1
ON	373	1
ON	374	1
ON	375	1
ON	376	1
ON	377	1
ON	378	1
ON	379	1
ON	380	1
ON	381	1
ON	382	1
ON	383	1
ON	384	1

ON	385	1
ON	386	1
ON	387	1
ON	388	1
ON	389	1
ON	390	1
ON	391	1
ON	392	1
ON	393	1
ON	394	1
ON	395	1
ON	396	1
ON	397	1
ON	398	1
ON	399	1
ON	400	1
ON	401	1
ON	402	1
ON	403	1
ON	404	1
ON	405	1
ON	406	1
ON	407	1
ON	408	1
ON	409	1
ON	410	1
ON	411	1
ON	412	1
ON	413	1
ON	414	1
ON	415	1
ON	416	1
ON	417	1
ON	418	1
ON	419	1
ON	420	1
ON	421	1
ON	422	1
ON	423	1
ON	424	1
ON	425	1
ON	426	1
ON	427	1
ON	428	1
ON	429	1
ON	430	1
ON	431	1
ON	432	1
ON	433	1
ON	434	1
ON	435	1
ON	436	1
ON	437	1
ON	438	1

ON	439	1
ON	440	1
ON	441	1
ON	442	1
ON	443	1
ON	444	1
ON	445	1
ON	446	1
ON	447	1
ON	448	1
ON	449	1
ON	450	1
ON	451	1
ON	452	1
ON	453	1
ON	454	1
ON	455	1
ON	456	1
ON	457	1
ON	458	1
ON	459	1
ON	460	1
ON	461	1
ON	462	1
ON	463	1
ON	464	1
ON	465	1
ON	466	1
ON	467	1
ON	468	1
ON	469	1
ON	470	1
ON	471	1
ON	472	1
ON	473	1
ON	474	1
ON	475	1
ON	476	1
ON	477	1
ON	478	1
ON	479	1
ON	480	1
ON	481	1
ON	482	1
ON	483	1
ON	484	1
ON	485	1
ON	486	1
ON	487	1
ON	488	1
ON	489	1
ON	490	1
ON	491	1
ON	492	1

ON	493	1
ON	494	1
ON	495	1
ON	496	1
ON	497	1
ON	498	1
ON	499	1
ON	500	1
ON	501	1
ON	502	1
ON	503	1
ON	504	1
ON	505	1
ON	506	1
ON	507	1
ON	508	1
ON	509	1
ON	510	1
ON	511	1
ON	512	1
ON	513	1
ON	514	1
ON	515	1
ON	516	1
ON	517	1
ON	518	1
ON	519	1
ON	520	1
ON	521	1
ON	522	1
ON	523	1
ON	524	1
ON	525	1
ON	526	1
ON	527	1
ON	528	1
ON	529	1
ON	530	1
ON	531	1
ON	532	1
ON	533	1
ON	534	1
ON	535	1

LoadCaseEnvelope	"SLE max"	Max
ON	275	1
ON	276	1
ON	277	1
ON	278	1
ON	279	1
ON	280	1
ON	281	1
ON	282	1
ON	283	1

ON	284	1
ON	285	1
ON	286	1
ON	287	1
ON	288	1
ON	289	1
ON	290	1
ON	291	1
ON	292	1
ON	293	1
ON	294	1
ON	295	1
ON	296	1
ON	297	1
ON	298	1
ON	299	1
ON	300	1
ON	301	1
ON	302	1
ON	303	1
ON	304	1
ON	305	1
ON	306	1
ON	307	1
ON	308	1
ON	309	1
ON	310	1
ON	311	1
ON	312	1
ON	313	1
ON	314	1
ON	315	1
ON	316	1
ON	317	1
ON	318	1
ON	319	1
ON	320	1
ON	321	1
ON	322	1
ON	323	1
ON	324	1
ON	325	1
ON	326	1
ON	327	1
ON	328	1
ON	329	1
ON	330	1
ON	331	1
ON	332	1
ON	333	1
ON	334	1
ON	335	1
ON	336	1
ON	337	1

ON	338	1
ON	339	1
ON	340	1
ON	341	1
ON	342	1
ON	343	1
ON	344	1
ON	345	1
ON	346	1
ON	347	1
ON	348	1
ON	349	1
ON	350	1
ON	351	1
ON	352	1
ON	353	1
ON	354	1
ON	355	1
ON	356	1
ON	357	1
ON	358	1
ON	359	1
ON	360	1
ON	361	1
ON	362	1
ON	363	1
ON	364	1
ON	365	1
ON	366	1
ON	367	1
ON	368	1
ON	369	1
ON	370	1
ON	371	1
ON	372	1
ON	373	1
ON	374	1
ON	375	1
ON	376	1
ON	377	1
ON	378	1
ON	379	1
ON	380	1
ON	381	1
ON	382	1
ON	383	1
ON	384	1
ON	385	1
ON	386	1
ON	387	1
ON	388	1
ON	389	1
ON	390	1
ON	391	1

ON	392	1
ON	393	1
ON	394	1
ON	395	1
ON	396	1
ON	397	1
ON	398	1
ON	399	1
ON	400	1
ON	401	1
ON	402	1
ON	403	1
ON	404	1
ON	405	1
ON	406	1
ON	407	1
ON	408	1
ON	409	1
ON	410	1
ON	411	1
ON	412	1
ON	413	1
ON	414	1
ON	415	1
ON	416	1
ON	417	1
ON	418	1
ON	419	1
ON	420	1
ON	421	1
ON	422	1
ON	423	1
ON	424	1
ON	425	1
ON	426	1
ON	427	1
ON	428	1
ON	429	1
ON	430	1
ON	431	1
ON	432	1
ON	433	1
ON	434	1
ON	435	1
ON	436	1
ON	437	1
ON	438	1
ON	439	1
ON	440	1
ON	441	1
ON	442	1
ON	443	1
ON	444	1
ON	445	1

ON	446	1
ON	447	1
ON	448	1
ON	449	1
ON	450	1
ON	451	1
ON	452	1
ON	453	1
ON	454	1
ON	455	1
ON	456	1
ON	457	1
ON	458	1
ON	459	1
ON	460	1
ON	461	1
ON	462	1
ON	463	1
ON	464	1
ON	465	1
ON	466	1
ON	467	1
ON	468	1
ON	469	1
ON	470	1
ON	471	1
ON	472	1
ON	473	1
ON	474	1
ON	475	1
ON	476	1
ON	477	1
ON	478	1
ON	479	1
ON	480	1
ON	481	1
ON	482	1
ON	483	1
ON	484	1
ON	485	1
ON	486	1
ON	487	1
ON	488	1
ON	489	1
ON	490	1
ON	491	1
ON	492	1
ON	493	1
ON	494	1
ON	495	1
ON	496	1
ON	497	1
ON	498	1
ON	499	1

```
   ON                      500       1
   ON                      501       1
   ON                      502       1
   ON                      503       1
   ON                      504       1
   ON                      505       1
   ON                      506       1
   ON                      507       1
   ON                      508       1
   ON                      509       1
   ON                      510       1
   ON                      511       1
   ON                      512       1
   ON                      513       1
   ON                      514       1
   ON                      515       1
   ON                      516       1
   ON                      517       1
   ON                      518       1
   ON                      519       1
   ON                      520       1
   ON                      521       1
   ON                      522       1
   ON                      523       1
   ON                      524       1
   ON                      525       1
   ON                      526       1
   ON                      527       1
   ON                      528       1
   ON                      529       1
   ON                      530       1
   ON                      531       1
   ON                      532       1
   ON                      533       1
   ON                      534       1
   ON                      535       1


/ ______________________________________________________________________________
/ INCREMENT ENVELOPES

   IncrementEnvelope    "MIN_SLU"  Min
   ON                        1
   ON                        2
   ON                        3
   ON                        4
   ON                        5
   ON                        6
   ON                        7
   ON                        8
   ON                        9
   ON                       10
   ON                       11
   ON                       12
```

ON	13
ON	14
ON	15
ON	16
ON	17
ON	18
ON	19
ON	20
ON	21
ON	22
ON	23
ON	24
ON	25
ON	26
ON	27
ON	28
ON	29
ON	30
ON	31
ON	32
ON	33
ON	34
ON	35
ON	36
ON	37
ON	38
ON	39
ON	40
ON	41
ON	42
ON	43
ON	44
ON	45
ON	46
ON	47
ON	48
ON	49
ON	50
ON	51
ON	52
ON	53
ON	54
ON	55
ON	56
ON	57
ON	58
ON	59
ON	60
ON	61
ON	62
ON	63
ON	64
ON	65
ON	66

ON	67
ON	68
ON	69
ON	70
ON	71
ON	72
ON	73
ON	74
ON	75
ON	76
ON	77
ON	78
ON	79
ON	80
ON	81
ON	82
ON	83
ON	84
ON	85
ON	86
ON	87
ON	88
ON	89
ON	90
ON	91
ON	92
ON	93
ON	94
ON	95
ON	96
ON	97
ON	98
ON	99
ON	100
ON	101
ON	102
ON	103
ON	104
ON	105
ON	106
ON	107
ON	108
ON	109
ON	110
ON	111
ON	112
ON	113
ON	114
ON	115
ON	116
ON	117
ON	118
ON	119
ON	120

ON	121
ON	122
ON	123
ON	124
ON	125
ON	126
ON	127
ON	128
ON	129
ON	130
ON	131
ON	132
ON	133
ON	134
ON	135
ON	136
ON	137
ON	138
ON	139
ON	140
ON	141
ON	142
ON	143
ON	144
ON	145
ON	146
ON	147
ON	148
ON	149
ON	150
ON	151
ON	152
ON	153
ON	154
ON	155
ON	156
ON	157
ON	158
ON	159
ON	160
ON	161
ON	162
ON	163
ON	164
ON	165
ON	166
ON	167
ON	168
ON	169
ON	170
ON	171
ON	172
ON	173
ON	174

ON	175
ON	176
ON	177
ON	178
ON	179
ON	180
ON	181
ON	182
ON	183
ON	184
ON	185
ON	186
ON	187
ON	188
ON	189
ON	190
ON	191
ON	192
ON	193
ON	194
ON	195
ON	196
ON	197
ON	198
ON	199
ON	200
ON	201
ON	202
ON	203
ON	204
ON	205
ON	206
ON	207
ON	208
ON	209
ON	210
ON	211
ON	212
ON	213
ON	214
ON	215
ON	216
ON	217
ON	218
ON	219
ON	220
ON	221
ON	222
ON	223
ON	224
ON	225
ON	226
ON	227
ON	228

ON	229
ON	230
ON	231
ON	232
ON	233
ON	234
ON	235
ON	236
ON	237
ON	238
ON	239
ON	240
ON	241
ON	242
ON	243
ON	244
ON	245
ON	246
ON	247
ON	248
ON	249
ON	250
ON	251
ON	252
ON	253
ON	254
ON	255
ON	256
ON	257
ON	258
ON	259
ON	260
ON	261
ON	262

IncrementEnvelope	"Max_SLU"	Max
ON	1	
ON	2	
ON	3	
ON	4	
ON	5	
ON	6	
ON	7	
ON	8	
ON	9	
ON	10	
ON	11	
ON	12	
ON	13	
ON	14	
ON	15	
ON	16	
ON	17	
ON	18	

ON	19
ON	20
ON	21
ON	22
ON	23
ON	24
ON	25
ON	26
ON	27
ON	28
ON	29
ON	30
ON	31
ON	32
ON	33
ON	34
ON	35
ON	36
ON	37
ON	38
ON	39
ON	40
ON	41
ON	42
ON	43
ON	44
ON	45
ON	46
ON	47
ON	48
ON	49
ON	50
ON	51
ON	52
ON	53
ON	54
ON	55
ON	56
ON	57
ON	58
ON	59
ON	60
ON	61
ON	62
ON	63
ON	64
ON	65
ON	66
ON	67
ON	68
ON	69
ON	70
ON	71
ON	72

ON	73
ON	74
ON	75
ON	76
ON	77
ON	78
ON	79
ON	80
ON	81
ON	82
ON	83
ON	84
ON	85
ON	86
ON	87
ON	88
ON	89
ON	90
ON	91
ON	92
ON	93
ON	94
ON	95
ON	96
ON	97
ON	98
ON	99
ON	100
ON	101
ON	102
ON	103
ON	104
ON	105
ON	106
ON	107
ON	108
ON	109
ON	110
ON	111
ON	112
ON	113
ON	114
ON	115
ON	116
ON	117
ON	118
ON	119
ON	120
ON	121
ON	122
ON	123
ON	124
ON	125
ON	126

ON	127
ON	128
ON	129
ON	130
ON	131
ON	132
ON	133
ON	134
ON	135
ON	136
ON	137
ON	138
ON	139
ON	140
ON	141
ON	142
ON	143
ON	144
ON	145
ON	146
ON	147
ON	148
ON	149
ON	150
ON	151
ON	152
ON	153
ON	154
ON	155
ON	156
ON	157
ON	158
ON	159
ON	160
ON	161
ON	162
ON	163
ON	164
ON	165
ON	166
ON	167
ON	168
ON	169
ON	170
ON	171
ON	172
ON	173
ON	174
ON	175
ON	176
ON	177
ON	178
ON	179
ON	180

ON	181
ON	182
ON	183
ON	184
ON	185
ON	186
ON	187
ON	188
ON	189
ON	190
ON	191
ON	192
ON	193
ON	194
ON	195
ON	196
ON	197
ON	198
ON	199
ON	200
ON	201
ON	202
ON	203
ON	204
ON	205
ON	206
ON	207
ON	208
ON	209
ON	210
ON	211
ON	212
ON	213
ON	214
ON	215
ON	216
ON	217
ON	218
ON	219
ON	220
ON	221
ON	222
ON	223
ON	224
ON	225
ON	226
ON	227
ON	228
ON	229
ON	230
ON	231
ON	232
ON	233
ON	234

```
ON                      235
ON                      236
ON                      237
ON                      238
ON                      239
ON                      240
ON                      241
ON                      242
ON                      243
ON                      244
ON                      245
ON                      246
ON                      247
ON                      248
ON                      249
ON                      250
ON                      251
ON                      252
ON                      253
ON                      254
ON                      255
ON                      256
ON                      257
ON                      258
ON                      259
ON                      260
ON                      261
ON                      262

IncrementEnvelope    "Min_SLV"  Min
ON                      263
ON                      264
ON                      265
ON                      266
ON                      267
ON                      268
ON                      269
ON                      270
ON                      271
ON                      272
ON                      273
ON                      274
ON                      275
ON                      276
ON                      277
ON                      278
ON                      279
ON                      280
ON                      281
ON                      282
ON                      283
ON                      284
ON                      285
ON                      286
```

```
IncrementEnvelope    "Max_SLV"  Max
ON                     263
ON                     264
ON                     265
ON                     266
ON                     267
ON                     268
ON                     269
ON                     270
ON                     271
ON                     272
ON                     273
ON                     274
ON                     275
ON                     276
ON                     277
ON                     278
ON                     279
ON                     280
ON                     281
ON                     282
ON                     283
ON                     284
ON                     285
ON                     286

IncrementEnvelope    "Min_SLE"  Min
ON                     263
ON                     264
ON                     265
ON                     266
ON                     267
ON                     268
ON                     269
ON                     270
ON                     271
ON                     272
ON                     273
ON                     274
ON                     275
ON                     276
ON                     277
ON                     278
ON                     279
ON                     280
ON                     281
ON                     282
ON                     283
ON                     284
ON                     285
ON                     286
ON                     287
ON                     288
```

ON	289
ON	290
ON	291
ON	292
ON	293
ON	294
ON	295
ON	296
ON	297
ON	298
ON	299
ON	300
ON	301
ON	302
ON	303
ON	304
ON	305
ON	306
ON	307
ON	308
ON	309
ON	310
ON	311
ON	312
ON	313
ON	314
ON	315
ON	316
ON	317
ON	318
ON	319
ON	320
ON	321
ON	322
ON	323
ON	324
ON	325
ON	326
ON	327
ON	328
ON	329
ON	330
ON	331
ON	332
ON	333
ON	334
ON	335
ON	336
ON	337
ON	338
ON	339
ON	340
ON	341
ON	342

ON	343
ON	344
ON	345
ON	346
ON	347
ON	348
ON	349
ON	350
ON	351
ON	352
ON	353
ON	354
ON	355
ON	356
ON	357
ON	358
ON	359
ON	360
ON	361
ON	362
ON	363
ON	364
ON	365
ON	366
ON	367
ON	368
ON	369
ON	370
ON	371
ON	372
ON	373
ON	374
ON	375
ON	376
ON	377
ON	378
ON	379
ON	380
ON	381
ON	382
ON	383
ON	384
ON	385
ON	386
ON	387
ON	388
ON	389
ON	390
ON	391
ON	392
ON	393
ON	394
ON	395
ON	396

ON	397
ON	398
ON	399
ON	400
ON	401
ON	402
ON	403
ON	404
ON	405
ON	406
ON	407
ON	408
ON	409
ON	410
ON	411
ON	412
ON	413
ON	414
ON	415
ON	416
ON	417
ON	418
ON	419
ON	420
ON	421
ON	422
ON	423
ON	424
ON	425
ON	426
ON	427
ON	428
ON	429
ON	430
ON	431
ON	432
ON	433
ON	434
ON	435
ON	436
ON	437
ON	438
ON	439
ON	440
ON	441
ON	442
ON	443
ON	444
ON	445
ON	446
ON	447
ON	448
ON	449
ON	450

ON	451
ON	452
ON	453
ON	454
ON	455
ON	456
ON	457
ON	458
ON	459
ON	460
ON	461
ON	462
ON	463
ON	464
ON	465
ON	466
ON	467
ON	468
ON	469
ON	470
ON	471
ON	472
ON	473
ON	474
ON	475
ON	476
ON	477
ON	478
ON	479
ON	480
ON	481
ON	482
ON	483
ON	484
ON	485
ON	486
ON	487
ON	488
ON	489
ON	490
ON	491
ON	492
ON	493
ON	494
ON	495
ON	496
ON	497
ON	498
ON	499
ON	500
ON	501
ON	502
ON	503
ON	504

ON	505
ON	506
ON	507
ON	508
ON	509
ON	510
ON	511
ON	512
ON	513
ON	514
ON	515
ON	516
ON	517
ON	518
ON	519
ON	520
ON	521
ON	522
ON	523
ON	524
ON	525
ON	526
ON	527
ON	528
ON	529
ON	530
ON	531
ON	532
ON	533
ON	534
ON	535
ON	536
ON	537
ON	538
ON	539
ON	540
ON	541
ON	542
ON	543
ON	544
ON	545
ON	546
ON	547
ON	548

IncrementEnvelope	"Max_SLE" Max
ON	263
ON	264
ON	265
ON	266
ON	267
ON	268
ON	269
ON	270

ON	271
ON	272
ON	273
ON	274
ON	275
ON	276
ON	277
ON	278
ON	279
ON	280
ON	281
ON	282
ON	283
ON	284
ON	285
ON	286
ON	287
ON	288
ON	289
ON	290
ON	291
ON	292
ON	293
ON	294
ON	295
ON	296
ON	297
ON	298
ON	299
ON	300
ON	301
ON	302
ON	303
ON	304
ON	305
ON	306
ON	307
ON	308
ON	309
ON	310
ON	311
ON	312
ON	313
ON	314
ON	315
ON	316
ON	317
ON	318
ON	319
ON	320
ON	321
ON	322
ON	323
ON	324

ON	325
ON	326
ON	327
ON	328
ON	329
ON	330
ON	331
ON	332
ON	333
ON	334
ON	335
ON	336
ON	337
ON	338
ON	339
ON	340
ON	341
ON	342
ON	343
ON	344
ON	345
ON	346
ON	347
ON	348
ON	349
ON	350
ON	351
ON	352
ON	353
ON	354
ON	355
ON	356
ON	357
ON	358
ON	359
ON	360
ON	361
ON	362
ON	363
ON	364
ON	365
ON	366
ON	367
ON	368
ON	369
ON	370
ON	371
ON	372
ON	373
ON	374
ON	375
ON	376
ON	377
ON	378

ON	379
ON	380
ON	381
ON	382
ON	383
ON	384
ON	385
ON	386
ON	387
ON	388
ON	389
ON	390
ON	391
ON	392
ON	393
ON	394
ON	395
ON	396
ON	397
ON	398
ON	399
ON	400
ON	401
ON	402
ON	403
ON	404
ON	405
ON	406
ON	407
ON	408
ON	409
ON	410
ON	411
ON	412
ON	413
ON	414
ON	415
ON	416
ON	417
ON	418
ON	419
ON	420
ON	421
ON	422
ON	423
ON	424
ON	425
ON	426
ON	427
ON	428
ON	429
ON	430
ON	431
ON	432

ON	433
ON	434
ON	435
ON	436
ON	437
ON	438
ON	439
ON	440
ON	441
ON	442
ON	443
ON	444
ON	445
ON	446
ON	447
ON	448
ON	449
ON	450
ON	451
ON	452
ON	453
ON	454
ON	455
ON	456
ON	457
ON	458
ON	459
ON	460
ON	461
ON	462
ON	463
ON	464
ON	465
ON	466
ON	467
ON	468
ON	469
ON	470
ON	471
ON	472
ON	473
ON	474
ON	475
ON	476
ON	477
ON	478
ON	479
ON	480
ON	481
ON	482
ON	483
ON	484
ON	485
ON	486

ON	487
ON	488
ON	489
ON	490
ON	491
ON	492
ON	493
ON	494
ON	495
ON	496
ON	497
ON	498
ON	499
ON	500
ON	501
ON	502
ON	503
ON	504
ON	505
ON	506
ON	507
ON	508
ON	509
ON	510
ON	511
ON	512
ON	513
ON	514
ON	515
ON	516
ON	517
ON	518
ON	519
ON	520
ON	521
ON	522
ON	523
ON	524
ON	525
ON	526
ON	527
ON	528
ON	529
ON	530
ON	531
ON	532
ON	533
ON	534
ON	535
ON	536
ON	537
ON	538
ON	539
ON	540

ON	541
ON	542
ON	543
ON	544
ON	545
ON	546
ON	547
ON	548

IncrementEnvelope	"Abs_SLU"	Abs
ON	1	
ON	2	
ON	3	
ON	4	
ON	5	
ON	6	
ON	7	
ON	8	
ON	9	
ON	10	
ON	11	
ON	12	
ON	13	
ON	14	
ON	15	
ON	16	
ON	17	
ON	18	
ON	19	
ON	20	
ON	21	
ON	22	
ON	23	
ON	24	
ON	25	
ON	26	
ON	27	
ON	28	
ON	29	
ON	30	
ON	31	
ON	32	
ON	33	
ON	34	
ON	35	
ON	36	
ON	37	
ON	38	
ON	39	
ON	40	
ON	41	
ON	42	
ON	43	
ON	44	

ON	45
ON	46
ON	47
ON	48
ON	49
ON	50
ON	51
ON	52
ON	53
ON	54
ON	55
ON	56
ON	57
ON	58
ON	59
ON	60
ON	61
ON	62
ON	63
ON	64
ON	65
ON	66
ON	67
ON	68
ON	69
ON	70
ON	71
ON	72
ON	73
ON	74
ON	75
ON	76
ON	77
ON	78
ON	79
ON	80
ON	81
ON	82
ON	83
ON	84
ON	85
ON	86
ON	87
ON	88
ON	89
ON	90
ON	91
ON	92
ON	93
ON	94
ON	95
ON	96
ON	97
ON	98

ON	99
ON	100
ON	101
ON	102
ON	103
ON	104
ON	105
ON	106
ON	107
ON	108
ON	109
ON	110
ON	111
ON	112
ON	113
ON	114
ON	115
ON	116
ON	117
ON	118
ON	119
ON	120
ON	121
ON	122
ON	123
ON	124
ON	125
ON	126
ON	127
ON	128
ON	129
ON	130
ON	131
ON	132
ON	133
ON	134
ON	135
ON	136
ON	137
ON	138
ON	139
ON	140
ON	141
ON	142
ON	143
ON	144
ON	145
ON	146
ON	147
ON	148
ON	149
ON	150
ON	151
ON	152

ON	153
ON	154
ON	155
ON	156
ON	157
ON	158
ON	159
ON	160
ON	161
ON	162
ON	163
ON	164
ON	165
ON	166
ON	167
ON	168
ON	169
ON	170
ON	171
ON	172
ON	173
ON	174
ON	175
ON	176
ON	177
ON	178
ON	179
ON	180
ON	181
ON	182
ON	183
ON	184
ON	185
ON	186
ON	187
ON	188
ON	189
ON	190
ON	191
ON	192
ON	193
ON	194
ON	195
ON	196
ON	197
ON	198
ON	199
ON	200
ON	201
ON	202
ON	203
ON	204
ON	205
ON	206

ON	207
ON	208
ON	209
ON	210
ON	211
ON	212
ON	213
ON	214
ON	215
ON	216
ON	217
ON	218
ON	219
ON	220
ON	221
ON	222
ON	223
ON	224
ON	225
ON	226
ON	227
ON	228
ON	229
ON	230
ON	231
ON	232
ON	233
ON	234
ON	235
ON	236
ON	237
ON	238
ON	239
ON	240
ON	241
ON	242
ON	243
ON	244
ON	245
ON	246
ON	247
ON	248
ON	249
ON	250
ON	251
ON	252
ON	253
ON	254
ON	255
ON	256
ON	257
ON	258
ON	259
ON	260

```
   ON                      261
   ON                      262


/ ____________________________________________________________________________
/ COORDINATE SYSTEM DEFINITIONS

   CoordSys                  1   "Global XYZ"  GlobalXYZ


/ ____________________________________________________________________________
/ NODE COORDINATES

   Node                      1       0    -5.00000000000000E-1
0.00000000000000E+0      0.00000000000000E+0
   Node                      2       0    -3.50000000000000E+0
0.00000000000000E+0      0.00000000000000E+0
   Node                      3       0    -6.50000000000000E+0
0.00000000000000E+0      0.00000000000000E+0
   Node                      4       0    -9.50000000000000E+0
0.00000000000000E+0      0.00000000000000E+0
   Node                      5       0    -1.25000000000000E+1
0.00000000000000E+0      0.00000000000000E+0
   Node                      6       0    -1.55000000000000E+1
0.00000000000000E+0      0.00000000000000E+0
   Node                      7       0    -1.85000000000000E+1
0.00000000000000E+0      0.00000000000000E+0
   Node                      8       0    -2.15000000000000E+1
0.00000000000000E+0      0.00000000000000E+0
   Node                      9       0    -2.45000000000000E+1
0.00000000000000E+0      0.00000000000000E+0
   Node                     10       0    -2.75000000000000E+1
0.00000000000000E+0      0.00000000000000E+0
   Node                     11       0    -5.00000000000000E-1
-1.40000000000000E+1      6.36000000000000E+0
   Node                     12       0    -5.00000000000000E-1
0.00000000000000E+0      6.36000000000000E+0
   Node                     13       0    -3.50000000000000E+0
-1.40000000000000E+1      6.36000000000000E+0
   Node                     14       0    -3.50000000000000E+0
0.00000000000000E+0      6.36000000000000E+0
   Node                     15       0    -6.50000000000000E+0
-1.40000000000000E+1      6.36000000000000E+0
   Node                     16       0    -6.50000000000000E+0
0.00000000000000E+0      6.36000000000000E+0
   Node                     17       0    -9.50000000000000E+0
-1.40000000000000E+1      6.36000000000000E+0
   Node                     18       0    -9.50000000000000E+0
0.00000000000000E+0      6.36000000000000E+0
   Node                     19       0    -1.25000000000000E+1
-1.40000000000000E+1      6.36000000000000E+0
   Node                     20       0    -1.25000000000000E+1
0.00000000000000E+0      6.36000000000000E+0
   Node                     21       0    -1.55000000000000E+1
```

-1.40000000000000E+1 6.36000000000000E+0
Node 22 0 -1.55000000000000E+1
0.00000000000000E+0 6.36000000000000E+0
Node 23 0 -1.85000000000000E+1
-1.40000000000000E+1 6.36000000000000E+0
Node 24 0 -1.85000000000000E+1
0.00000000000000E+0 6.36000000000000E+0
Node 25 0 -2.15000000000000E+1
-1.40000000000000E+1 6.36000000000000E+0
Node 26 0 -2.15000000000000E+1
0.00000000000000E+0 6.36000000000000E+0
Node 27 0 -2.45000000000000E+1
-1.40000000000000E+1 6.36000000000000E+0
Node 28 0 -2.45000000000000E+1
0.00000000000000E+0 6.36000000000000E+0
Node 29 0 -2.75000000000000E+1
-1.40000000000000E+1 6.36000000000000E+0
Node 30 0 -2.75000000000000E+1
0.00000000000000E+0 6.36000000000000E+0
Node 31 0 -5.00000000000000E-1
0.00000000000000E+0 7.00000000000000E-1
Node 32 0 -5.00000000000000E-1
0.00000000000000E+0 2.00000000000000E+0
Node 33 0 -5.00000000000000E-1
0.00000000000000E+0 3.00000000000000E+0
Node 34 0 -5.00000000000000E-1
0.00000000000000E+0 4.00000000000000E+0
Node 35 0 -5.00000000000000E-1
0.00000000000000E+0 5.00000000000000E+0
Node 36 0 -3.50000000000000E+0
0.00000000000000E+0 7.00000000000000E-1
Node 37 0 -3.50000000000000E+0
0.00000000000000E+0 2.00000000000000E+0
Node 38 0 -3.50000000000000E+0
0.00000000000000E+0 3.00000000000000E+0
Node 39 0 -3.50000000000000E+0
0.00000000000000E+0 4.00000000000000E+0
Node 40 0 -3.50000000000000E+0
0.00000000000000E+0 5.00000000000000E+0
Node 41 0 -6.50000000000000E+0
0.00000000000000E+0 7.00000000000000E-1
Node 42 0 -6.50000000000000E+0
0.00000000000000E+0 2.00000000000000E+0
Node 43 0 -6.50000000000000E+0
0.00000000000000E+0 3.00000000000000E+0
Node 44 0 -6.50000000000000E+0
0.00000000000000E+0 4.00000000000000E+0
Node 45 0 -6.50000000000000E+0
0.00000000000000E+0 5.00000000000000E+0
Node 46 0 -9.50000000000000E+0
0.00000000000000E+0 7.00000000000000E-1
Node 47 0 -9.50000000000000E+0
0.00000000000000E+0 2.00000000000000E+0
Node 48 0 -9.50000000000000E+0

```
0.00000000000000E+0      3.00000000000000E+0
   Node                    49       0    -9.50000000000000E+0
0.00000000000000E+0      4.00000000000000E+0
   Node                    50       0    -9.50000000000000E+0
0.00000000000000E+0      5.00000000000000E+0
   Node                    51       0    -1.25000000000000E+1
0.00000000000000E+0      7.00000000000000E-1
   Node                    52       0    -1.25000000000000E+1
0.00000000000000E+0      2.00000000000000E+0
   Node                    53       0    -1.25000000000000E+1
0.00000000000000E+0      3.00000000000000E+0
   Node                    54       0    -1.25000000000000E+1
0.00000000000000E+0      4.00000000000000E+0
   Node                    55       0    -1.25000000000000E+1
0.00000000000000E+0      5.00000000000000E+0
   Node                    56       0    -1.55000000000000E+1
0.00000000000000E+0      7.00000000000000E-1
   Node                    57       0    -1.55000000000000E+1
0.00000000000000E+0      2.00000000000000E+0
   Node                    58       0    -1.55000000000000E+1
0.00000000000000E+0      3.00000000000000E+0
   Node                    59       0    -1.55000000000000E+1
0.00000000000000E+0      4.00000000000000E+0
   Node                    60       0    -1.55000000000000E+1
0.00000000000000E+0      5.00000000000000E+0
   Node                    61       0    -1.85000000000000E+1
0.00000000000000E+0      7.00000000000000E-1
   Node                    62       0    -1.85000000000000E+1
0.00000000000000E+0      2.00000000000000E+0
   Node                    63       0    -1.85000000000000E+1
0.00000000000000E+0      3.00000000000000E+0
   Node                    64       0    -1.85000000000000E+1
0.00000000000000E+0      4.00000000000000E+0
   Node                    65       0    -1.85000000000000E+1
0.00000000000000E+0      5.00000000000000E+0
   Node                    66       0    -2.15000000000000E+1
0.00000000000000E+0      7.00000000000000E-1
   Node                    67       0    -2.15000000000000E+1
0.00000000000000E+0      2.00000000000000E+0
   Node                    68       0    -2.15000000000000E+1
0.00000000000000E+0      3.00000000000000E+0
   Node                    69       0    -2.15000000000000E+1
0.00000000000000E+0      4.00000000000000E+0
   Node                    70       0    -2.15000000000000E+1
0.00000000000000E+0      5.00000000000000E+0
   Node                    71       0    -2.45000000000000E+1
0.00000000000000E+0      7.00000000000000E-1
   Node                    72       0    -2.45000000000000E+1
0.00000000000000E+0      2.00000000000000E+0
   Node                    73       0    -2.45000000000000E+1
0.00000000000000E+0      3.00000000000000E+0
   Node                    74       0    -2.45000000000000E+1
0.00000000000000E+0      4.00000000000000E+0
   Node                    75       0    -2.45000000000000E+1
```

```
0.00000000000000E+0      5.00000000000000E+0
   Node                    76       0    -2.75000000000000E+1
0.00000000000000E+0      7.00000000000000E-1
   Node                    77       0    -2.75000000000000E+1
0.00000000000000E+0      2.00000000000000E+0
   Node                    78       0    -2.75000000000000E+1
0.00000000000000E+0      3.00000000000000E+0
   Node                    79       0    -2.75000000000000E+1
0.00000000000000E+0      4.00000000000000E+0
   Node                    80       0    -2.75000000000000E+1
0.00000000000000E+0      5.00000000000000E+0
   Node                    81       0    -2.75000000000000E+1
-1.35000000000000E+1      6.36000000000000E+0
   Node                    82       0    -2.75000000000000E+1
-1.30000000000000E+1      6.36000000000000E+0
   Node                    83       0    -2.75000000000000E+1
-1.25000000000000E+1      6.36000000000000E+0
   Node                    84       0    -2.75000000000000E+1
-1.20000000000000E+1      6.36000000000000E+0
   Node                    85       0    -2.75000000000000E+1
-1.15000000000000E+1      6.36000000000000E+0
   Node                    86       0    -2.75000000000000E+1
-1.10000000000000E+1      6.36000000000000E+0
   Node                    87       0    -2.75000000000000E+1
-1.05000000000000E+1      6.36000000000000E+0
   Node                    88       0    -2.75000000000000E+1
-1.00000000000000E+1      6.36000000000000E+0
   Node                    89       0    -2.75000000000000E+1
-9.50000000000000E+0      6.36000000000000E+0
   Node                    90       0    -2.75000000000000E+1
-9.00000000000000E+0      6.36000000000000E+0
   Node                    91       0    -2.75000000000000E+1
-8.50000000000000E+0      6.36000000000000E+0
   Node                    92       0    -2.75000000000000E+1
-8.00000000000000E+0      6.36000000000000E+0
   Node                    93       0    -2.75000000000000E+1
-7.50000000000000E+0      6.36000000000000E+0
   Node                    94       0    -2.75000000000000E+1
-7.00000000000000E+0      6.36000000000000E+0
   Node                    95       0    -2.75000000000000E+1
-6.00000000000000E+0      6.36000000000000E+0
   Node                    96       0    -2.75000000000000E+1
-5.50000000000000E+0      6.36000000000000E+0
   Node                    97       0    -2.75000000000000E+1
-5.00000000000000E+0      6.36000000000000E+0
   Node                    98       0    -2.75000000000000E+1
-4.50000000000000E+0      6.36000000000000E+0
   Node                    99       0    -2.75000000000000E+1
-4.00000000000000E+0      6.36000000000000E+0
   Node                   100       0    -2.75000000000000E+1
-3.50000000000000E+0      6.36000000000000E+0
   Node                   101       0    -2.75000000000000E+1
-3.00000000000000E+0      6.36000000000000E+0
   Node                   102       0    -2.75000000000000E+1
```

```
-2.50000000000000E+0      6.36000000000000E+0
   Node                   103       0    -2.75000000000000E+1
-2.00000000000000E+0      6.36000000000000E+0
   Node                   104       0    -2.75000000000000E+1
-1.50000000000000E+0      6.36000000000000E+0
   Node                   105       0    -2.75000000000000E+1
-1.00000000000000E+0      6.36000000000000E+0
   Node                   106       0    -2.75000000000000E+1
-5.00000000000000E-1      6.36000000000000E+0
   Node                   107       0    -5.00000000000000E-1
-1.35000000000000E+1      6.36000000000000E+0
   Node                   108       0    -5.00000000000000E-1
-1.30000000000000E+1      6.36000000000000E+0
   Node                   109       0    -5.00000000000000E-1
-1.25000000000000E+1      6.36000000000000E+0
   Node                   110       0    -5.00000000000000E-1
-1.20000000000000E+1      6.36000000000000E+0
   Node                   111       0    -5.00000000000000E-1
-1.15000000000000E+1      6.36000000000000E+0
   Node                   112       0    -5.00000000000000E-1
-1.10000000000000E+1      6.36000000000000E+0
   Node                   113       0    -5.00000000000000E-1
-1.05000000000000E+1      6.36000000000000E+0
   Node                   114       0    -5.00000000000000E-1
-1.00000000000000E+1      6.36000000000000E+0
   Node                   115       0    -5.00000000000000E-1
-9.50000000000000E+0      6.36000000000000E+0
   Node                   116       0    -5.00000000000000E-1
-9.00000000000000E+0      6.36000000000000E+0
   Node                   117       0    -5.00000000000000E-1
-8.50000000000000E+0      6.36000000000000E+0
   Node                   118       0    -5.00000000000000E-1
-8.00000000000000E+0      6.36000000000000E+0
   Node                   119       0    -5.00000000000000E-1
-7.50000000000000E+0      6.36000000000000E+0
   Node                   120       0    -5.00000000000000E-1
-7.00000000000000E+0      6.36000000000000E+0
   Node                   121       0    -5.00000000000000E-1
-6.00000000000000E+0      6.36000000000000E+0
   Node                   122       0    -5.00000000000000E-1
-5.50000000000000E+0      6.36000000000000E+0
   Node                   123       0    -5.00000000000000E-1
-5.00000000000000E+0      6.36000000000000E+0
   Node                   124       0    -5.00000000000000E-1
-4.50000000000000E+0      6.36000000000000E+0
   Node                   125       0    -5.00000000000000E-1
-4.00000000000000E+0      6.36000000000000E+0
   Node                   126       0    -5.00000000000000E-1
-3.50000000000000E+0      6.36000000000000E+0
   Node                   127       0    -5.00000000000000E-1
-3.00000000000000E+0      6.36000000000000E+0
   Node                   128       0    -5.00000000000000E-1
-2.50000000000000E+0      6.36000000000000E+0
   Node                   129       0    -5.00000000000000E-1
```

```
-2.00000000000000E+0      6.36000000000000E+0
   Node                   130       0    -5.00000000000000E-1
-1.50000000000000E+0      6.36000000000000E+0
   Node                   131       0    -5.00000000000000E-1
-1.00000000000000E+0      6.36000000000000E+0
   Node                   132       0    -5.00000000000000E-1
-5.00000000000000E-1      6.36000000000000E+0
   Node                   133       0    -3.50000000000000E+0
-1.35000000000000E+1      6.36000000000000E+0
   Node                   134       0    -3.50000000000000E+0
-1.30000000000000E+1      6.36000000000000E+0
   Node                   135       0    -3.50000000000000E+0
-1.25000000000000E+1      6.36000000000000E+0
   Node                   136       0    -3.50000000000000E+0
-1.20000000000000E+1      6.36000000000000E+0
   Node                   137       0    -3.50000000000000E+0
-1.15000000000000E+1      6.36000000000000E+0
   Node                   138       0    -3.50000000000000E+0
-1.10000000000000E+1      6.36000000000000E+0
   Node                   139       0    -3.50000000000000E+0
-1.05000000000000E+1      6.36000000000000E+0
   Node                   140       0    -3.50000000000000E+0
-1.00000000000000E+1      6.36000000000000E+0
   Node                   141       0    -3.50000000000000E+0
-9.50000000000000E+0      6.36000000000000E+0
   Node                   142       0    -3.50000000000000E+0
-9.00000000000000E+0      6.36000000000000E+0
   Node                   143       0    -3.50000000000000E+0
-8.50000000000000E+0      6.36000000000000E+0
   Node                   144       0    -3.50000000000000E+0
-8.00000000000000E+0      6.36000000000000E+0
   Node                   145       0    -3.50000000000000E+0
-7.50000000000000E+0      6.36000000000000E+0
   Node                   146       0    -3.50000000000000E+0
-7.00000000000000E+0      6.36000000000000E+0
   Node                   147       0    -3.50000000000000E+0
-6.00000000000000E+0      6.36000000000000E+0
   Node                   148       0    -3.50000000000000E+0
-5.50000000000000E+0      6.36000000000000E+0
   Node                   149       0    -3.50000000000000E+0
-5.00000000000000E+0      6.36000000000000E+0
   Node                   150       0    -3.50000000000000E+0
-4.50000000000000E+0      6.36000000000000E+0
   Node                   151       0    -3.50000000000000E+0
-4.00000000000000E+0      6.36000000000000E+0
   Node                   152       0    -3.50000000000000E+0
-3.50000000000000E+0      6.36000000000000E+0
   Node                   153       0    -3.50000000000000E+0
-3.00000000000000E+0      6.36000000000000E+0
   Node                   154       0    -3.50000000000000E+0
-2.50000000000000E+0      6.36000000000000E+0
   Node                   155       0    -3.50000000000000E+0
-2.00000000000000E+0      6.36000000000000E+0
   Node                   156       0    -3.50000000000000E+0
```

-1.50000000000000E+0 6.36000000000000E+0
Node 157 0 -3.50000000000000E+0
-1.00000000000000E+0 6.36000000000000E+0
Node 158 0 -3.50000000000000E+0
-5.00000000000000E-1 6.36000000000000E+0
Node 159 0 -6.50000000000000E+0
-1.35000000000000E+1 6.36000000000000E+0
Node 160 0 -6.50000000000000E+0
-1.30000000000000E+1 6.36000000000000E+0
Node 161 0 -6.50000000000000E+0
-1.25000000000000E+1 6.36000000000000E+0
Node 162 0 -6.50000000000000E+0
-1.20000000000000E+1 6.36000000000000E+0
Node 163 0 -6.50000000000000E+0
-1.15000000000000E+1 6.36000000000000E+0
Node 164 0 -6.50000000000000E+0
-1.10000000000000E+1 6.36000000000000E+0
Node 165 0 -6.50000000000000E+0
-1.05000000000000E+1 6.36000000000000E+0
Node 166 0 -6.50000000000000E+0
-1.00000000000000E+1 6.36000000000000E+0
Node 167 0 -6.50000000000000E+0
-9.50000000000000E+0 6.36000000000000E+0
Node 168 0 -6.50000000000000E+0
-9.00000000000000E+0 6.36000000000000E+0
Node 169 0 -6.50000000000000E+0
-8.50000000000000E+0 6.36000000000000E+0
Node 170 0 -6.50000000000000E+0
-8.00000000000000E+0 6.36000000000000E+0
Node 171 0 -6.50000000000000E+0
-7.50000000000000E+0 6.36000000000000E+0
Node 172 0 -6.50000000000000E+0
-7.00000000000000E+0 6.36000000000000E+0
Node 173 0 -6.50000000000000E+0
-6.00000000000000E+0 6.36000000000000E+0
Node 174 0 -6.50000000000000E+0
-5.50000000000000E+0 6.36000000000000E+0
Node 175 0 -6.50000000000000E+0
-5.00000000000000E+0 6.36000000000000E+0
Node 176 0 -6.50000000000000E+0
-4.50000000000000E+0 6.36000000000000E+0
Node 177 0 -6.50000000000000E+0
-4.00000000000000E+0 6.36000000000000E+0
Node 178 0 -6.50000000000000E+0
-3.50000000000000E+0 6.36000000000000E+0
Node 179 0 -6.50000000000000E+0
-3.00000000000000E+0 6.36000000000000E+0
Node 180 0 -6.50000000000000E+0
-2.50000000000000E+0 6.36000000000000E+0
Node 181 0 -6.50000000000000E+0
-2.00000000000000E+0 6.36000000000000E+0
Node 182 0 -6.50000000000000E+0
-1.50000000000000E+0 6.36000000000000E+0
Node 183 0 -6.50000000000000E+0

```
-1.00000000000000E+0      6.36000000000000E+0
   Node                   184       0    -6.50000000000000E+0
-5.00000000000000E-1      6.36000000000000E+0
   Node                   185       0    -9.50000000000000E+0
-1.35000000000000E+1      6.36000000000000E+0
   Node                   186       0    -9.50000000000000E+0
-1.30000000000000E+1      6.36000000000000E+0
   Node                   187       0    -9.50000000000000E+0
-1.25000000000000E+1      6.36000000000000E+0
   Node                   188       0    -9.50000000000000E+0
-1.20000000000000E+1      6.36000000000000E+0
   Node                   189       0    -9.50000000000000E+0
-1.15000000000000E+1      6.36000000000000E+0
   Node                   190       0    -9.50000000000000E+0
-1.10000000000000E+1      6.36000000000000E+0
   Node                   191       0    -9.50000000000000E+0
-1.05000000000000E+1      6.36000000000000E+0
   Node                   192       0    -9.50000000000000E+0
-1.00000000000000E+1      6.36000000000000E+0
   Node                   193       0    -9.50000000000000E+0
-9.50000000000000E+0      6.36000000000000E+0
   Node                   194       0    -9.50000000000000E+0
-9.00000000000000E+0      6.36000000000000E+0
   Node                   195       0    -9.50000000000000E+0
-8.50000000000000E+0      6.36000000000000E+0
   Node                   196       0    -9.50000000000000E+0
-8.00000000000000E+0      6.36000000000000E+0
   Node                   197       0    -9.50000000000000E+0
-7.50000000000000E+0      6.36000000000000E+0
   Node                   198       0    -9.50000000000000E+0
-7.00000000000000E+0      6.36000000000000E+0
   Node                   199       0    -9.50000000000000E+0
-6.00000000000000E+0      6.36000000000000E+0
   Node                   200       0    -9.50000000000000E+0
-5.50000000000000E+0      6.36000000000000E+0
   Node                   201       0    -9.50000000000000E+0
-5.00000000000000E+0      6.36000000000000E+0
   Node                   202       0    -9.50000000000000E+0
-4.50000000000000E+0      6.36000000000000E+0
   Node                   203       0    -9.50000000000000E+0
-4.00000000000000E+0      6.36000000000000E+0
   Node                   204       0    -9.50000000000000E+0
-3.50000000000000E+0      6.36000000000000E+0
   Node                   205       0    -9.50000000000000E+0
-3.00000000000000E+0      6.36000000000000E+0
   Node                   206       0    -9.50000000000000E+0
-2.50000000000000E+0      6.36000000000000E+0
   Node                   207       0    -9.50000000000000E+0
-2.00000000000000E+0      6.36000000000000E+0
   Node                   208       0    -9.50000000000000E+0
-1.50000000000000E+0      6.36000000000000E+0
   Node                   209       0    -9.50000000000000E+0
-1.00000000000000E+0      6.36000000000000E+0
   Node                   210       0    -9.50000000000000E+0
```

```
-5.00000000000000E-1      6.36000000000000E+0
   Node                   211       0    -1.25000000000000E+1
-1.35000000000000E+1      6.36000000000000E+0
   Node                   212       0    -1.25000000000000E+1
-1.30000000000000E+1      6.36000000000000E+0
   Node                   213       0    -1.25000000000000E+1
-1.25000000000000E+1      6.36000000000000E+0
   Node                   214       0    -1.25000000000000E+1
-1.20000000000000E+1      6.36000000000000E+0
   Node                   215       0    -1.25000000000000E+1
-1.15000000000000E+1      6.36000000000000E+0
   Node                   216       0    -1.25000000000000E+1
-1.10000000000000E+1      6.36000000000000E+0
   Node                   217       0    -1.25000000000000E+1
-1.05000000000000E+1      6.36000000000000E+0
   Node                   218       0    -1.25000000000000E+1
-1.00000000000000E+1      6.36000000000000E+0
   Node                   219       0    -1.25000000000000E+1
-9.50000000000000E+0      6.36000000000000E+0
   Node                   220       0    -1.25000000000000E+1
-9.00000000000000E+0      6.36000000000000E+0
   Node                   221       0    -1.25000000000000E+1
-8.50000000000000E+0      6.36000000000000E+0
   Node                   222       0    -1.25000000000000E+1
-8.00000000000000E+0      6.36000000000000E+0
   Node                   223       0    -1.25000000000000E+1
-7.50000000000000E+0      6.36000000000000E+0
   Node                   224       0    -1.25000000000000E+1
-7.00000000000000E+0      6.36000000000000E+0
   Node                   225       0    -1.25000000000000E+1
-6.00000000000000E+0      6.36000000000000E+0
   Node                   226       0    -1.25000000000000E+1
-5.50000000000000E+0      6.36000000000000E+0
   Node                   227       0    -1.25000000000000E+1
-5.00000000000000E+0      6.36000000000000E+0
   Node                   228       0    -1.25000000000000E+1
-4.50000000000000E+0      6.36000000000000E+0
   Node                   229       0    -1.25000000000000E+1
-4.00000000000000E+0      6.36000000000000E+0
   Node                   230       0    -1.25000000000000E+1
-3.50000000000000E+0      6.36000000000000E+0
   Node                   231       0    -1.25000000000000E+1
-3.00000000000000E+0      6.36000000000000E+0
   Node                   232       0    -1.25000000000000E+1
-2.50000000000000E+0      6.36000000000000E+0
   Node                   233       0    -1.25000000000000E+1
-2.00000000000000E+0      6.36000000000000E+0
   Node                   234       0    -1.25000000000000E+1
-1.50000000000000E+0      6.36000000000000E+0
   Node                   235       0    -1.25000000000000E+1
-1.00000000000000E+0      6.36000000000000E+0
   Node                   236       0    -1.25000000000000E+1
-5.00000000000000E-1      6.36000000000000E+0
   Node                   237       0    -1.55000000000000E+1
```

-1.35000000000000E+1 6.36000000000000E+0
Node 238 0 -1.55000000000000E+1
-1.30000000000000E+1 6.36000000000000E+0
Node 239 0 -1.55000000000000E+1
-1.25000000000000E+1 6.36000000000000E+0
Node 240 0 -1.55000000000000E+1
-1.20000000000000E+1 6.36000000000000E+0
Node 241 0 -1.55000000000000E+1
-1.15000000000000E+1 6.36000000000000E+0
Node 242 0 -1.55000000000000E+1
-1.10000000000000E+1 6.36000000000000E+0
Node 243 0 -1.55000000000000E+1
-1.05000000000000E+1 6.36000000000000E+0
Node 244 0 -1.55000000000000E+1
-1.00000000000000E+1 6.36000000000000E+0
Node 245 0 -1.55000000000000E+1
-9.50000000000000E+0 6.36000000000000E+0
Node 246 0 -1.55000000000000E+1
-9.00000000000000E+0 6.36000000000000E+0
Node 247 0 -1.55000000000000E+1
-8.50000000000000E+0 6.36000000000000E+0
Node 248 0 -1.55000000000000E+1
-8.00000000000000E+0 6.36000000000000E+0
Node 249 0 -1.55000000000000E+1
-7.50000000000000E+0 6.36000000000000E+0
Node 250 0 -1.55000000000000E+1
-7.00000000000000E+0 6.36000000000000E+0
Node 251 0 -1.55000000000000E+1
-6.00000000000000E+0 6.36000000000000E+0
Node 252 0 -1.55000000000000E+1
-5.50000000000000E+0 6.36000000000000E+0
Node 253 0 -1.55000000000000E+1
-5.00000000000000E+0 6.36000000000000E+0
Node 254 0 -1.55000000000000E+1
-4.50000000000000E+0 6.36000000000000E+0
Node 255 0 -1.55000000000000E+1
-4.00000000000000E+0 6.36000000000000E+0
Node 256 0 -1.55000000000000E+1
-3.50000000000000E+0 6.36000000000000E+0
Node 257 0 -1.55000000000000E+1
-3.00000000000000E+0 6.36000000000000E+0
Node 258 0 -1.55000000000000E+1
-2.50000000000000E+0 6.36000000000000E+0
Node 259 0 -1.55000000000000E+1
-2.00000000000000E+0 6.36000000000000E+0
Node 260 0 -1.55000000000000E+1
-1.50000000000000E+0 6.36000000000000E+0
Node 261 0 -1.55000000000000E+1
-1.00000000000000E+0 6.36000000000000E+0
Node 262 0 -1.55000000000000E+1
-5.00000000000000E-1 6.36000000000000E+0
Node 263 0 -1.85000000000000E+1
-1.35000000000000E+1 6.36000000000000E+0
Node 264 0 -1.85000000000000E+1

-1.30000000000000E+1 6.36000000000000E+0
Node 265 0 -1.85000000000000E+1
-1.25000000000000E+1 6.36000000000000E+0
Node 266 0 -1.85000000000000E+1
-1.20000000000000E+1 6.36000000000000E+0
Node 267 0 -1.85000000000000E+1
-1.15000000000000E+1 6.36000000000000E+0
Node 268 0 -1.85000000000000E+1
-1.10000000000000E+1 6.36000000000000E+0
Node 269 0 -1.85000000000000E+1
-1.05000000000000E+1 6.36000000000000E+0
Node 270 0 -1.85000000000000E+1
-1.00000000000000E+1 6.36000000000000E+0
Node 271 0 -1.85000000000000E+1
-9.50000000000000E+0 6.36000000000000E+0
Node 272 0 -1.85000000000000E+1
-9.00000000000000E+0 6.36000000000000E+0
Node 273 0 -1.85000000000000E+1
-8.50000000000000E+0 6.36000000000000E+0
Node 274 0 -1.85000000000000E+1
-8.00000000000000E+0 6.36000000000000E+0
Node 275 0 -1.85000000000000E+1
-7.50000000000000E+0 6.36000000000000E+0
Node 276 0 -1.85000000000000E+1
-7.00000000000000E+0 6.36000000000000E+0
Node 277 0 -1.85000000000000E+1
-6.00000000000000E+0 6.36000000000000E+0
Node 278 0 -1.85000000000000E+1
-5.50000000000000E+0 6.36000000000000E+0
Node 279 0 -1.85000000000000E+1
-5.00000000000000E+0 6.36000000000000E+0
Node 280 0 -1.85000000000000E+1
-4.50000000000000E+0 6.36000000000000E+0
Node 281 0 -1.85000000000000E+1
-4.00000000000000E+0 6.36000000000000E+0
Node 282 0 -1.85000000000000E+1
-3.50000000000000E+0 6.36000000000000E+0
Node 283 0 -1.85000000000000E+1
-3.00000000000000E+0 6.36000000000000E+0
Node 284 0 -1.85000000000000E+1
-2.50000000000000E+0 6.36000000000000E+0
Node 285 0 -1.85000000000000E+1
-2.00000000000000E+0 6.36000000000000E+0
Node 286 0 -1.85000000000000E+1
-1.50000000000000E+0 6.36000000000000E+0
Node 287 0 -1.85000000000000E+1
-1.00000000000000E+0 6.36000000000000E+0
Node 288 0 -1.85000000000000E+1
-5.00000000000000E-1 6.36000000000000E+0
Node 289 0 -2.15000000000000E+1
-1.35000000000000E+1 6.36000000000000E+0
Node 290 0 -2.15000000000000E+1
-1.30000000000000E+1 6.36000000000000E+0
Node 291 0 -2.15000000000000E+1

```
-1.25000000000000E+1      6.36000000000000E+0
   Node                   292       0    -2.15000000000000E+1
-1.20000000000000E+1      6.36000000000000E+0
   Node                   293       0    -2.15000000000000E+1
-1.15000000000000E+1      6.36000000000000E+0
   Node                   294       0    -2.15000000000000E+1
-1.10000000000000E+1      6.36000000000000E+0
   Node                   295       0    -2.15000000000000E+1
-1.05000000000000E+1      6.36000000000000E+0
   Node                   296       0    -2.15000000000000E+1
-1.00000000000000E+1      6.36000000000000E+0
   Node                   297       0    -2.15000000000000E+1
-9.50000000000000E+0      6.36000000000000E+0
   Node                   298       0    -2.15000000000000E+1
-9.00000000000000E+0      6.36000000000000E+0
   Node                   299       0    -2.15000000000000E+1
-8.50000000000000E+0      6.36000000000000E+0
   Node                   300       0    -2.15000000000000E+1
-8.00000000000000E+0      6.36000000000000E+0
   Node                   301       0    -2.15000000000000E+1
-7.50000000000000E+0      6.36000000000000E+0
   Node                   302       0    -2.15000000000000E+1
-7.00000000000000E+0      6.36000000000000E+0
   Node                   303       0    -2.15000000000000E+1
-6.00000000000000E+0      6.36000000000000E+0
   Node                   304       0    -2.15000000000000E+1
-5.50000000000000E+0      6.36000000000000E+0
   Node                   305       0    -2.15000000000000E+1
-5.00000000000000E+0      6.36000000000000E+0
   Node                   306       0    -2.15000000000000E+1
-4.50000000000000E+0      6.36000000000000E+0
   Node                   307       0    -2.15000000000000E+1
-4.00000000000000E+0      6.36000000000000E+0
   Node                   308       0    -2.15000000000000E+1
-3.50000000000000E+0      6.36000000000000E+0
   Node                   309       0    -2.15000000000000E+1
-3.00000000000000E+0      6.36000000000000E+0
   Node                   310       0    -2.15000000000000E+1
-2.50000000000000E+0      6.36000000000000E+0
   Node                   311       0    -2.15000000000000E+1
-2.00000000000000E+0      6.36000000000000E+0
   Node                   312       0    -2.15000000000000E+1
-1.50000000000000E+0      6.36000000000000E+0
   Node                   313       0    -2.15000000000000E+1
-1.00000000000000E+0      6.36000000000000E+0
   Node                   314       0    -2.15000000000000E+1
-5.00000000000000E-1      6.36000000000000E+0
   Node                   315       0    -2.45000000000000E+1
-1.35000000000000E+1      6.36000000000000E+0
   Node                   316       0    -2.45000000000000E+1
-1.30000000000000E+1      6.36000000000000E+0
   Node                   317       0    -2.45000000000000E+1
-1.25000000000000E+1      6.36000000000000E+0
   Node                   318       0    -2.45000000000000E+1
```

-1.20000000000000E+1 6.36000000000000E+0
Node 319 0 -2.45000000000000E+1
-1.15000000000000E+1 6.36000000000000E+0
Node 320 0 -2.45000000000000E+1
-1.10000000000000E+1 6.36000000000000E+0
Node 321 0 -2.45000000000000E+1
-1.05000000000000E+1 6.36000000000000E+0
Node 322 0 -2.45000000000000E+1
-1.00000000000000E+1 6.36000000000000E+0
Node 323 0 -2.45000000000000E+1
-9.50000000000000E+0 6.36000000000000E+0
Node 324 0 -2.45000000000000E+1
-9.00000000000000E+0 6.36000000000000E+0
Node 325 0 -2.45000000000000E+1
-8.50000000000000E+0 6.36000000000000E+0
Node 326 0 -2.45000000000000E+1
-8.00000000000000E+0 6.36000000000000E+0
Node 327 0 -2.45000000000000E+1
-7.50000000000000E+0 6.36000000000000E+0
Node 328 0 -2.45000000000000E+1
-7.00000000000000E+0 6.36000000000000E+0
Node 329 0 -2.45000000000000E+1
-6.00000000000000E+0 6.36000000000000E+0
Node 330 0 -2.45000000000000E+1
-5.50000000000000E+0 6.36000000000000E+0
Node 331 0 -2.45000000000000E+1
-5.00000000000000E+0 6.36000000000000E+0
Node 332 0 -2.45000000000000E+1
-4.50000000000000E+0 6.36000000000000E+0
Node 333 0 -2.45000000000000E+1
-4.00000000000000E+0 6.36000000000000E+0
Node 334 0 -2.45000000000000E+1
-3.50000000000000E+0 6.36000000000000E+0
Node 335 0 -2.45000000000000E+1
-3.00000000000000E+0 6.36000000000000E+0
Node 336 0 -2.45000000000000E+1
-2.50000000000000E+0 6.36000000000000E+0
Node 337 0 -2.45000000000000E+1
-2.00000000000000E+0 6.36000000000000E+0
Node 338 0 -2.45000000000000E+1
-1.50000000000000E+0 6.36000000000000E+0
Node 339 0 -2.45000000000000E+1
-1.00000000000000E+0 6.36000000000000E+0
Node 340 0 -2.45000000000000E+1
-5.00000000000000E-1 6.36000000000000E+0
Node 341 0 -2.50000000000000E+1
0.00000000000000E+0 6.36000000000000E+0
Node 342 0 -2.55000000000000E+1
0.00000000000000E+0 6.36000000000000E+0
Node 343 0 -2.60000000000000E+1
0.00000000000000E+0 6.36000000000000E+0
Node 344 0 -2.65000000000000E+1
0.00000000000000E+0 6.36000000000000E+0
Node 345 0 -2.70000000000000E+1

```
0.00000000000000E+0      6.36000000000000E+0
   Node                   346       0     0.00000000000000E+0
-1.77635683940025E-15     0.00000000000000E+0
   Node                   347       0    -3.00000000000000E+0
0.00000000000000E+0      0.00000000000000E+0
   Node                   348       0    -5.30000000000000E+0
0.00000000000000E+0      0.00000000000000E+0
   Node                   349       0    -5.75000000000000E+0
0.00000000000000E+0      0.00000000000000E+0
   Node                   350       0    -9.00000000000000E+0
0.00000000000000E+0      0.00000000000000E+0
   Node                   351       0    -1.20000000000000E+1
0.00000000000000E+0      0.00000000000000E+0
   Node                   352       0    -1.50000000000000E+1
0.00000000000000E+0      0.00000000000000E+0
   Node                   353       0    -1.80000000000000E+1
0.00000000000000E+0      0.00000000000000E+0
   Node                   354       0    -1.98125000000000E+1
0.00000000000000E+0      0.00000000000000E+0
   Node                   355       0    -2.02500000000000E+1
0.00000000000000E+0      0.00000000000000E+0
   Node                   356       0    -2.07500000000000E+1
0.00000000000000E+0      0.00000000000000E+0
   Node                   357       0    -2.40000000000000E+1
0.00000000000000E+0      0.00000000000000E+0
   Node                   358       0    -2.70000000000000E+1
0.00000000000000E+0      0.00000000000000E+0
   Node                   359       0    -2.80000000000000E+1
-1.77635683940025E-15     0.00000000000000E+0
   Node                   360       0    -2.50000000000000E+1
0.00000000000000E+0      0.00000000000000E+0
   Node                   361       0    -2.55000000000000E+1
0.00000000000000E+0      0.00000000000000E+0
   Node                   362       0    -2.60000000000000E+1
0.00000000000000E+0      0.00000000000000E+0
   Node                   363       0    -2.65000000000000E+1
0.00000000000000E+0      0.00000000000000E+0
   Node                   364       0    -2.20000000000000E+1
0.00000000000000E+0      0.00000000000000E+0
   Node                   365       0    -2.25000000000000E+1
0.00000000000000E+0      0.00000000000000E+0
   Node                   366       0    -2.30000000000000E+1
0.00000000000000E+0      0.00000000000000E+0
   Node                   367       0    -2.35000000000000E+1
0.00000000000000E+0      0.00000000000000E+0
   Node                   368       0    -1.00000000000000E+0
0.00000000000000E+0      0.00000000000000E+0
   Node                   369       0    -1.50000000000000E+0
0.00000000000000E+0      0.00000000000000E+0
   Node                   370       0    -2.00000000000000E+0
0.00000000000000E+0      0.00000000000000E+0
   Node                   371       0    -2.50000000000000E+0
0.00000000000000E+0      0.00000000000000E+0
   Node                   372       0    -7.00000000000000E+0
```

```
0.00000000000000E+0      0.00000000000000E+0
   Node                   373       0    -7.50000000000000E+0
0.00000000000000E+0      0.00000000000000E+0
   Node                   374       0    -8.00000000000000E+0
0.00000000000000E+0      0.00000000000000E+0
   Node                   375       0    -8.50000000000000E+0
0.00000000000000E+0      0.00000000000000E+0
   Node                   376       0    -1.00000000000000E+1
0.00000000000000E+0      0.00000000000000E+0
   Node                   377       0    -1.05000000000000E+1
0.00000000000000E+0      0.00000000000000E+0
   Node                   378       0    -1.10000000000000E+1
0.00000000000000E+0      0.00000000000000E+0
   Node                   379       0    -1.15000000000000E+1
0.00000000000000E+0      0.00000000000000E+0
   Node                   380       0    -1.30000000000000E+1
0.00000000000000E+0      0.00000000000000E+0
   Node                   381       0    -1.35000000000000E+1
0.00000000000000E+0      0.00000000000000E+0
   Node                   382       0    -1.40000000000000E+1
0.00000000000000E+0      0.00000000000000E+0
   Node                   383       0    -1.45000000000000E+1
0.00000000000000E+0      0.00000000000000E+0
   Node                   384       0    -1.60000000000000E+1
0.00000000000000E+0      0.00000000000000E+0
   Node                   385       0    -1.65000000000000E+1
0.00000000000000E+0      0.00000000000000E+0
   Node                   386       0    -1.70000000000000E+1
0.00000000000000E+0      0.00000000000000E+0
   Node                   387       0    -1.75000000000000E+1
0.00000000000000E+0      0.00000000000000E+0
   Node                   388       0    -1.89375000000000E+1
0.00000000000000E+0      0.00000000000000E+0
   Node                   389       0    -1.93750000000000E+1
0.00000000000000E+0      0.00000000000000E+0
   Node                   390       0    -3.95000000000000E+0
0.00000000000000E+0      0.00000000000000E+0
   Node                   391       0    -4.40000000000000E+0
0.00000000000000E+0      0.00000000000000E+0
   Node                   392       0    -4.85000000000000E+0
0.00000000000000E+0      0.00000000000000E+0
   Node                   393       0    -2.70000000000000E+1
-3.00000000000000E+0      6.36000000000000E+0
   Node                   394       0    -2.50000000000000E+1
-3.00000000000000E+0      6.36000000000000E+0
   Node                   395       0    -2.55000000000000E+1
-3.00000000000000E+0      6.36000000000000E+0
   Node                   396       0    -2.60000000000000E+1
-3.00000000000000E+0      6.36000000000000E+0
   Node                   397       0    -2.65000000000000E+1
-3.00000000000000E+0      6.36000000000000E+0
   Node                   398       0     0.00000000000000E+0
-1.50000000000000E+1      0.00000000000000E+0
   Node                   399       0    -5.00000000000000E-1
```

```
-1.50000000000000E+1      0.00000000000000E+0
   Node                   400       0    -3.00000000000000E+0
-1.50000000000000E+1      0.00000000000000E+0
   Node                   401       0    -3.50000000000000E+0
-1.50000000000000E+1      0.00000000000000E+0
   Node                   402       0    -5.30000000000000E+0
-1.50000000000000E+1      0.00000000000000E+0
   Node                   403       0    -5.75000000000000E+0
-1.50000000000000E+1      0.00000000000000E+0
   Node                   404       0    -6.50000000000000E+0
-1.50000000000000E+1      0.00000000000000E+0
   Node                   405       0    -9.00000000000000E+0
-1.50000000000000E+1      0.00000000000000E+0
   Node                   406       0    -9.50000000000000E+0
-1.50000000000000E+1      0.00000000000000E+0
   Node                   407       0    -1.20000000000000E+1
-1.50000000000000E+1      0.00000000000000E+0
   Node                   408       0    -1.25000000000000E+1
-1.50000000000000E+1      0.00000000000000E+0
   Node                   409       0    -1.50000000000000E+1
-1.50000000000000E+1      0.00000000000000E+0
   Node                   410       0    -1.55000000000000E+1
-1.50000000000000E+1      0.00000000000000E+0
   Node                   411       0    -1.80000000000000E+1
-1.50000000000000E+1      0.00000000000000E+0
   Node                   412       0    -1.85000000000000E+1
-1.50000000000000E+1      0.00000000000000E+0
   Node                   413       0    -1.98125000000000E+1
-1.50000000000000E+1      0.00000000000000E+0
   Node                   414       0    -2.02500000000000E+1
-1.50000000000000E+1      0.00000000000000E+0
   Node                   415       0    -2.07500000000000E+1
-1.50000000000000E+1      0.00000000000000E+0
   Node                   416       0    -2.15000000000000E+1
-1.50000000000000E+1      0.00000000000000E+0
   Node                   417       0    -2.40000000000000E+1
-1.50000000000000E+1      0.00000000000000E+0
   Node                   418       0    -2.45000000000000E+1
-1.50000000000000E+1      0.00000000000000E+0
   Node                   419       0    -2.70000000000000E+1
-1.50000000000000E+1      0.00000000000000E+0
   Node                   420       0    -2.75000000000000E+1
-1.50000000000000E+1      0.00000000000000E+0
   Node                   421       0    -5.00000000000000E-1
-1.50000000000000E+1      6.36000000000000E+0
   Node                   422       0    -3.50000000000000E+0
-1.50000000000000E+1      6.36000000000000E+0
   Node                   423       0    -6.50000000000000E+0
-1.50000000000000E+1      6.36000000000000E+0
   Node                   424       0    -9.50000000000000E+0
-1.50000000000000E+1      6.36000000000000E+0
   Node                   425       0    -1.25000000000000E+1
-1.50000000000000E+1      6.36000000000000E+0
   Node                   426       0    -1.55000000000000E+1
```

-1.50000000000000E+1 6.36000000000000E+0
Node 427 0 -1.85000000000000E+1
-1.50000000000000E+1 6.36000000000000E+0
Node 428 0 -2.15000000000000E+1
-1.50000000000000E+1 6.36000000000000E+0
Node 429 0 -2.45000000000000E+1
-1.50000000000000E+1 6.36000000000000E+0
Node 430 0 -2.75000000000000E+1
-1.50000000000000E+1 6.36000000000000E+0
Node 431 0 -2.50000000000000E+1
-1.50000000000000E+1 6.36000000000000E+0
Node 432 0 -2.80000000000000E+1
-1.50000000000000E+1 0.00000000000000E+0
Node 433 0 -2.50000000000000E+1
-1.50000000000000E+1 0.00000000000000E+0
Node 434 0 -2.55000000000000E+1
-1.50000000000000E+1 0.00000000000000E+0
Node 435 0 -2.60000000000000E+1
-1.50000000000000E+1 0.00000000000000E+0
Node 436 0 -2.65000000000000E+1
-1.50000000000000E+1 0.00000000000000E+0
Node 437 0 -2.20000000000000E+1
-1.50000000000000E+1 0.00000000000000E+0
Node 438 0 -2.25000000000000E+1
-1.50000000000000E+1 0.00000000000000E+0
Node 439 0 -2.30000000000000E+1
-1.50000000000000E+1 0.00000000000000E+0
Node 440 0 -2.35000000000000E+1
-1.50000000000000E+1 0.00000000000000E+0
Node 441 0 -1.00000000000000E+0
-1.50000000000000E+1 0.00000000000000E+0
Node 442 0 -1.50000000000000E+0
-1.50000000000000E+1 0.00000000000000E+0
Node 443 0 -2.00000000000000E+0
-1.50000000000000E+1 0.00000000000000E+0
Node 444 0 -2.50000000000000E+0
-1.50000000000000E+1 0.00000000000000E+0
Node 445 0 -7.00000000000000E+0
-1.50000000000000E+1 0.00000000000000E+0
Node 446 0 -7.50000000000000E+0
-1.50000000000000E+1 0.00000000000000E+0
Node 447 0 -8.00000000000000E+0
-1.50000000000000E+1 0.00000000000000E+0
Node 448 0 -8.50000000000000E+0
-1.50000000000000E+1 0.00000000000000E+0
Node 449 0 -1.00000000000000E+1
-1.50000000000000E+1 0.00000000000000E+0
Node 450 0 -1.05000000000000E+1
-1.50000000000000E+1 0.00000000000000E+0
Node 451 0 -1.10000000000000E+1
-1.50000000000000E+1 0.00000000000000E+0
Node 452 0 -1.15000000000000E+1
-1.50000000000000E+1 0.00000000000000E+0
Node 453 0 -1.30000000000000E+1

-1.50000000000000E+1 0.00000000000000E+0
Node 454 0 -1.35000000000000E+1
-1.50000000000000E+1 0.00000000000000E+0
Node 455 0 -1.40000000000000E+1
-1.50000000000000E+1 0.00000000000000E+0
Node 456 0 -1.45000000000000E+1
-1.50000000000000E+1 0.00000000000000E+0
Node 457 0 -1.60000000000000E+1
-1.50000000000000E+1 0.00000000000000E+0
Node 458 0 -1.65000000000000E+1
-1.50000000000000E+1 0.00000000000000E+0
Node 459 0 -1.70000000000000E+1
-1.50000000000000E+1 0.00000000000000E+0
Node 460 0 -1.75000000000000E+1
-1.50000000000000E+1 0.00000000000000E+0
Node 461 0 -1.89375000000000E+1
-1.50000000000000E+1 0.00000000000000E+0
Node 462 0 -1.93750000000000E+1
-1.50000000000000E+1 0.00000000000000E+0
Node 463 0 -3.95000000000000E+0
-1.50000000000000E+1 0.00000000000000E+0
Node 464 0 -4.40000000000000E+0
-1.50000000000000E+1 0.00000000000000E+0
Node 465 0 -4.85000000000000E+0
-1.50000000000000E+1 0.00000000000000E+0
Node 466 0 -5.00000000000000E-1
-1.50000000000000E+1 7.00000000000000E-1
Node 467 0 -5.00000000000000E-1
-1.50000000000000E+1 2.00000000000000E+0
Node 468 0 -5.00000000000000E-1
-1.50000000000000E+1 3.00000000000000E+0
Node 469 0 -5.00000000000000E-1
-1.50000000000000E+1 4.00000000000000E+0
Node 470 0 -5.00000000000000E-1
-1.50000000000000E+1 5.00000000000000E+0
Node 471 0 -6.50000000000000E+0
-1.50000000000000E+1 7.00000000000000E-1
Node 472 0 -6.50000000000000E+0
-1.50000000000000E+1 2.00000000000000E+0
Node 473 0 -6.50000000000000E+0
-1.50000000000000E+1 3.00000000000000E+0
Node 474 0 -6.50000000000000E+0
-1.50000000000000E+1 4.00000000000000E+0
Node 475 0 -6.50000000000000E+0
-1.50000000000000E+1 5.00000000000000E+0
Node 476 0 -9.50000000000000E+0
-1.50000000000000E+1 7.00000000000000E-1
Node 477 0 -9.50000000000000E+0
-1.50000000000000E+1 2.00000000000000E+0
Node 478 0 -9.50000000000000E+0
-1.50000000000000E+1 3.00000000000000E+0
Node 479 0 -9.50000000000000E+0
-1.50000000000000E+1 4.00000000000000E+0
Node 480 0 -9.50000000000000E+0

```
-1.50000000000000E+1      5.00000000000000E+0
   Node                   481       0    -1.25000000000000E+1
-1.50000000000000E+1      7.00000000000000E-1
   Node                   482       0    -1.25000000000000E+1
-1.50000000000000E+1      2.00000000000000E+0
   Node                   483       0    -1.25000000000000E+1
-1.50000000000000E+1      3.00000000000000E+0
   Node                   484       0    -1.25000000000000E+1
-1.50000000000000E+1      4.00000000000000E+0
   Node                   485       0    -1.25000000000000E+1
-1.50000000000000E+1      5.00000000000000E+0
   Node                   486       0    -1.55000000000000E+1
-1.50000000000000E+1      7.00000000000000E-1
   Node                   487       0    -1.55000000000000E+1
-1.50000000000000E+1      2.00000000000000E+0
   Node                   488       0    -1.55000000000000E+1
-1.50000000000000E+1      3.00000000000000E+0
   Node                   489       0    -1.55000000000000E+1
-1.50000000000000E+1      4.00000000000000E+0
   Node                   490       0    -1.55000000000000E+1
-1.50000000000000E+1      5.00000000000000E+0
   Node                   491       0    -1.85000000000000E+1
-1.50000000000000E+1      7.00000000000000E-1
   Node                   492       0    -1.85000000000000E+1
-1.50000000000000E+1      2.00000000000000E+0
   Node                   493       0    -1.85000000000000E+1
-1.50000000000000E+1      3.00000000000000E+0
   Node                   494       0    -1.85000000000000E+1
-1.50000000000000E+1      4.00000000000000E+0
   Node                   495       0    -1.85000000000000E+1
-1.50000000000000E+1      5.00000000000000E+0
   Node                   496       0    -2.15000000000000E+1
-1.50000000000000E+1      7.00000000000000E-1
   Node                   497       0    -2.15000000000000E+1
-1.50000000000000E+1      2.00000000000000E+0
   Node                   498       0    -2.15000000000000E+1
-1.50000000000000E+1      3.00000000000000E+0
   Node                   499       0    -2.15000000000000E+1
-1.50000000000000E+1      4.00000000000000E+0
   Node                   500       0    -2.15000000000000E+1
-1.50000000000000E+1      5.00000000000000E+0
   Node                   501       0    -2.45000000000000E+1
-1.50000000000000E+1      7.00000000000000E-1
   Node                   502       0    -2.45000000000000E+1
-1.50000000000000E+1      2.00000000000000E+0
   Node                   503       0    -2.45000000000000E+1
-1.50000000000000E+1      3.00000000000000E+0
   Node                   504       0    -2.45000000000000E+1
-1.50000000000000E+1      4.00000000000000E+0
   Node                   505       0    -2.45000000000000E+1
-1.50000000000000E+1      5.00000000000000E+0
   Node                   506       0    -2.75000000000000E+1
-1.50000000000000E+1      7.00000000000000E-1
   Node                   507       0    -2.75000000000000E+1
```

-1.50000000000000E+1 2.00000000000000E+0
Node 508 0 -2.75000000000000E+1
-1.50000000000000E+1 3.00000000000000E+0
Node 509 0 -2.75000000000000E+1
-1.50000000000000E+1 4.00000000000000E+0
Node 510 0 -2.75000000000000E+1
-1.50000000000000E+1 5.00000000000000E+0
Node 511 0 -2.75000000000000E+1
-1.45000000000000E+1 6.36000000000000E+0
Node 512 0 -5.00000000000000E-1
-1.45000000000000E+1 6.36000000000000E+0
Node 513 0 -3.50000000000000E+0
-1.45000000000000E+1 6.36000000000000E+0
Node 514 0 -6.50000000000000E+0
-1.45000000000000E+1 6.36000000000000E+0
Node 515 0 -9.50000000000000E+0
-1.45000000000000E+1 6.36000000000000E+0
Node 516 0 -1.25000000000000E+1
-1.45000000000000E+1 6.36000000000000E+0
Node 517 0 -1.55000000000000E+1
-1.45000000000000E+1 6.36000000000000E+0
Node 518 0 -1.85000000000000E+1
-1.45000000000000E+1 6.36000000000000E+0
Node 519 0 -2.15000000000000E+1
-1.45000000000000E+1 6.36000000000000E+0
Node 520 0 -2.45000000000000E+1
-1.45000000000000E+1 6.36000000000000E+0
Node 521 0 -3.50000000000000E+0
-1.50000000000000E+1 7.00000000000000E-1
Node 522 0 -3.50000000000000E+0
-1.50000000000000E+1 2.00000000000000E+0
Node 523 0 -3.50000000000000E+0
-1.50000000000000E+1 3.00000000000000E+0
Node 524 0 -3.50000000000000E+0
-1.50000000000000E+1 4.00000000000000E+0
Node 525 0 -3.50000000000000E+0
-1.50000000000000E+1 5.00000000000000E+0
Node 526 0 -2.70000000000000E+1
-1.50000000000000E+1 6.36000000000000E+0
Node 527 0 -2.65000000000000E+1
-1.50000000000000E+1 6.36000000000000E+0
Node 528 0 -2.60000000000000E+1
-1.50000000000000E+1 6.36000000000000E+0
Node 529 0 -2.55000000000000E+1
-1.50000000000000E+1 6.36000000000000E+0
Node 530 0 -2.50000000000000E+1
-1.20000000000000E+1 6.36000000000000E+0
Node 531 0 -2.70000000000000E+1
-1.20000000000000E+1 6.36000000000000E+0
Node 532 0 -2.65000000000000E+1
-1.20000000000000E+1 6.36000000000000E+0
Node 533 0 -2.60000000000000E+1
-1.20000000000000E+1 6.36000000000000E+0
Node 534 0 -2.55000000000000E+1

-1.20000000000000E+1 6.36000000000000E+0
Node 535 0 -2.75000000000000E+1
-6.50000000000000E+0 6.36000000000000E+0
Node 536 0 -5.00000000000000E-1
-6.50000000000000E+0 6.36000000000000E+0
Node 537 0 -3.50000000000000E+0
-6.50000000000000E+0 6.36000000000000E+0
Node 538 0 -6.50000000000000E+0
-6.50000000000000E+0 6.36000000000000E+0
Node 539 0 -9.50000000000000E+0
-6.50000000000000E+0 6.36000000000000E+0
Node 540 0 -1.25000000000000E+1
-6.50000000000000E+0 6.36000000000000E+0
Node 541 0 -1.55000000000000E+1
-6.50000000000000E+0 6.36000000000000E+0
Node 542 0 -1.85000000000000E+1
-6.50000000000000E+0 6.36000000000000E+0
Node 543 0 -2.15000000000000E+1
-6.50000000000000E+0 6.36000000000000E+0
Node 544 0 -2.45000000000000E+1
-6.50000000000000E+0 6.36000000000000E+0
Node 545 0 -5.00000000000000E-1
-1.20000000000000E+0 0.00000000000000E+0
Node 546 0 0.00000000000000E+0
-1.20000000000000E+0 0.00000000000000E+0
Node 547 0 -3.50000000000000E+0
-1.20000000000000E+0 0.00000000000000E+0
Node 548 0 -3.00000000000000E+0
-1.20000000000000E+0 0.00000000000000E+0
Node 549 0 -5.75000000000000E+0
-1.20000000000000E+0 0.00000000000000E+0
Node 550 0 -5.30000000000000E+0
-1.20000000000000E+0 0.00000000000000E+0
Node 551 0 -6.50000000000000E+0
-1.20000000000000E+0 0.00000000000000E+0
Node 552 0 -9.50000000000000E+0
-1.20000000000000E+0 0.00000000000000E+0
Node 553 0 -9.00000000000000E+0
-1.20000000000000E+0 0.00000000000000E+0
Node 554 0 -1.25000000000000E+1
-1.20000000000000E+0 0.00000000000000E+0
Node 555 0 -1.20000000000000E+1
-1.20000000000000E+0 0.00000000000000E+0
Node 556 0 -1.55000000000000E+1
-1.20000000000000E+0 0.00000000000000E+0
Node 557 0 -1.50000000000000E+1
-1.20000000000000E+0 0.00000000000000E+0
Node 558 0 -1.85000000000000E+1
-1.20000000000000E+0 0.00000000000000E+0
Node 559 0 -1.80000000000000E+1
-1.20000000000000E+0 0.00000000000000E+0
Node 560 0 -2.02500000000000E+1
-1.20000000000000E+0 0.00000000000000E+0
Node 561 0 -1.98125000000000E+1

-1.20000000000000E+0 0.00000000000000E+0
Node 562 0 -2.15000000000000E+1
-1.20000000000000E+0 0.00000000000000E+0
Node 563 0 -2.07500000000000E+1
-1.20000000000000E+0 0.00000000000000E+0
Node 564 0 -2.45000000000000E+1
-1.20000000000000E+0 0.00000000000000E+0
Node 565 0 -2.40000000000000E+1
-1.20000000000000E+0 0.00000000000000E+0
Node 566 0 -2.75000000000000E+1
-1.20000000000000E+0 0.00000000000000E+0
Node 567 0 -2.70000000000000E+1
-1.20000000000000E+0 0.00000000000000E+0
Node 568 0 -2.80000000000000E+1
-1.20000000000000E+0 0.00000000000000E+0
Node 569 0 -2.50000000000000E+1
-1.20000000000000E+0 0.00000000000000E+0
Node 570 0 -2.55000000000000E+1
-1.20000000000000E+0 0.00000000000000E+0
Node 571 0 -2.60000000000000E+1
-1.20000000000000E+0 0.00000000000000E+0
Node 572 0 -2.65000000000000E+1
-1.20000000000000E+0 0.00000000000000E+0
Node 573 0 -2.20000000000000E+1
-1.20000000000000E+0 0.00000000000000E+0
Node 574 0 -2.25000000000000E+1
-1.20000000000000E+0 0.00000000000000E+0
Node 575 0 -2.30000000000000E+1
-1.20000000000000E+0 0.00000000000000E+0
Node 576 0 -2.35000000000000E+1
-1.20000000000000E+0 0.00000000000000E+0
Node 577 0 -1.00000000000000E+0
-1.20000000000000E+0 0.00000000000000E+0
Node 578 0 -1.50000000000000E+0
-1.20000000000000E+0 0.00000000000000E+0
Node 579 0 -2.00000000000000E+0
-1.20000000000000E+0 0.00000000000000E+0
Node 580 0 -2.50000000000000E+0
-1.20000000000000E+0 0.00000000000000E+0
Node 581 0 -7.00000000000000E+0
-1.20000000000000E+0 0.00000000000000E+0
Node 582 0 -7.50000000000000E+0
-1.20000000000000E+0 0.00000000000000E+0
Node 583 0 -8.00000000000000E+0
-1.20000000000000E+0 0.00000000000000E+0
Node 584 0 -8.50000000000000E+0
-1.20000000000000E+0 0.00000000000000E+0
Node 585 0 -1.00000000000000E+1
-1.20000000000000E+0 0.00000000000000E+0
Node 586 0 -1.05000000000000E+1
-1.20000000000000E+0 0.00000000000000E+0
Node 587 0 -1.10000000000000E+1
-1.20000000000000E+0 0.00000000000000E+0
Node 588 0 -1.15000000000000E+1

-1.20000000000000E+0 0.00000000000000E+0
Node 589 0 -1.30000000000000E+1
-1.20000000000000E+0 0.00000000000000E+0
Node 590 0 -1.35000000000000E+1
-1.20000000000000E+0 0.00000000000000E+0
Node 591 0 -1.40000000000000E+1
-1.20000000000000E+0 0.00000000000000E+0
Node 592 0 -1.45000000000000E+1
-1.20000000000000E+0 0.00000000000000E+0
Node 593 0 -1.60000000000000E+1
-1.20000000000000E+0 0.00000000000000E+0
Node 594 0 -1.65000000000000E+1
-1.20000000000000E+0 0.00000000000000E+0
Node 595 0 -1.70000000000000E+1
-1.20000000000000E+0 0.00000000000000E+0
Node 596 0 -1.75000000000000E+1
-1.20000000000000E+0 0.00000000000000E+0
Node 597 0 -1.89375000000000E+1
-1.20000000000000E+0 0.00000000000000E+0
Node 598 0 -1.93750000000000E+1
-1.20000000000000E+0 0.00000000000000E+0
Node 599 0 -3.95000000000000E+0
-1.20000000000000E+0 0.00000000000000E+0
Node 600 0 -4.40000000000000E+0
-1.20000000000000E+0 0.00000000000000E+0
Node 601 0 -4.85000000000000E+0
-1.20000000000000E+0 0.00000000000000E+0
Node 602 0 0.00000000000000E+0
-1.38000000000000E+1 0.00000000000000E+0
Node 603 0 -5.00000000000000E-1
-1.38000000000000E+1 0.00000000000000E+0
Node 604 0 -1.00000000000000E+0
-1.38000000000000E+1 0.00000000000000E+0
Node 605 0 -3.00000000000000E+0
-1.38000000000000E+1 0.00000000000000E+0
Node 606 0 -3.50000000000000E+0
-1.38000000000000E+1 0.00000000000000E+0
Node 607 0 -2.50000000000000E+0
-1.38000000000000E+1 0.00000000000000E+0
Node 608 0 -2.00000000000000E+0
-1.38000000000000E+1 0.00000000000000E+0
Node 609 0 -1.50000000000000E+0
-1.38000000000000E+1 0.00000000000000E+0
Node 610 0 -3.95000000000000E+0
-1.38000000000000E+1 0.00000000000000E+0
Node 611 0 -4.40000000000000E+0
-1.38000000000000E+1 0.00000000000000E+0
Node 612 0 -4.85000000000000E+0
-1.38000000000000E+1 0.00000000000000E+0
Node 613 0 -5.30000000000000E+0
-1.38000000000000E+1 0.00000000000000E+0
Node 614 0 -5.75000000000000E+0
-1.38000000000000E+1 0.00000000000000E+0
Node 615 0 -6.50000000000000E+0

```
-1.38000000000000E+1      0.00000000000000E+0
   Node                   616       0    -7.00000000000000E+0
-1.38000000000000E+1      0.00000000000000E+0
   Node                   617       0    -7.50000000000000E+0
-1.38000000000000E+1      0.00000000000000E+0
   Node                   618       0    -8.00000000000000E+0
-1.38000000000000E+1      0.00000000000000E+0
   Node                   619       0    -8.50000000000000E+0
-1.38000000000000E+1      0.00000000000000E+0
   Node                   620       0    -9.00000000000000E+0
-1.38000000000000E+1      0.00000000000000E+0
   Node                   621       0    -9.50000000000000E+0
-1.38000000000000E+1      0.00000000000000E+0
   Node                   622       0    -1.00000000000000E+1
-1.38000000000000E+1      0.00000000000000E+0
   Node                   623       0    -1.05000000000000E+1
-1.38000000000000E+1      0.00000000000000E+0
   Node                   624       0    -1.10000000000000E+1
-1.38000000000000E+1      0.00000000000000E+0
   Node                   625       0    -1.15000000000000E+1
-1.38000000000000E+1      0.00000000000000E+0
   Node                   626       0    -1.20000000000000E+1
-1.38000000000000E+1      0.00000000000000E+0
   Node                   627       0    -1.25000000000000E+1
-1.38000000000000E+1      0.00000000000000E+0
   Node                   628       0    -1.30000000000000E+1
-1.38000000000000E+1      0.00000000000000E+0
   Node                   629       0    -1.35000000000000E+1
-1.38000000000000E+1      0.00000000000000E+0
   Node                   630       0    -1.40000000000000E+1
-1.38000000000000E+1      0.00000000000000E+0
   Node                   631       0    -1.45000000000000E+1
-1.38000000000000E+1      0.00000000000000E+0
   Node                   632       0    -1.50000000000000E+1
-1.38000000000000E+1      0.00000000000000E+0
   Node                   633       0    -1.55000000000000E+1
-1.38000000000000E+1      0.00000000000000E+0
   Node                   634       0    -1.60000000000000E+1
-1.38000000000000E+1      0.00000000000000E+0
   Node                   635       0    -1.65000000000000E+1
-1.38000000000000E+1      0.00000000000000E+0
   Node                   636       0    -1.70000000000000E+1
-1.38000000000000E+1      0.00000000000000E+0
   Node                   637       0    -1.75000000000000E+1
-1.38000000000000E+1      0.00000000000000E+0
   Node                   638       0    -1.80000000000000E+1
-1.38000000000000E+1      0.00000000000000E+0
   Node                   639       0    -1.85000000000000E+1
-1.38000000000000E+1      0.00000000000000E+0
   Node                   640       0    -1.89375000000000E+1
-1.38000000000000E+1      0.00000000000000E+0
   Node                   641       0    -1.93750000000000E+1
-1.38000000000000E+1      0.00000000000000E+0
   Node                   642       0    -1.98125000000000E+1
```

-1.38000000000000E+1 0.00000000000000E+0
Node 643 0 -2.02500000000000E+1
-1.38000000000000E+1 0.00000000000000E+0
Node 644 0 -2.07500000000000E+1
-1.38000000000000E+1 0.00000000000000E+0
Node 645 0 -2.15000000000000E+1
-1.38000000000000E+1 0.00000000000000E+0
Node 646 0 -2.20000000000000E+1
-1.38000000000000E+1 0.00000000000000E+0
Node 647 0 -2.25000000000000E+1
-1.38000000000000E+1 0.00000000000000E+0
Node 648 0 -2.30000000000000E+1
-1.38000000000000E+1 0.00000000000000E+0
Node 649 0 -2.35000000000000E+1
-1.38000000000000E+1 0.00000000000000E+0
Node 650 0 -2.40000000000000E+1
-1.38000000000000E+1 0.00000000000000E+0
Node 651 0 -2.45000000000000E+1
-1.38000000000000E+1 0.00000000000000E+0
Node 652 0 -2.50000000000000E+1
-1.38000000000000E+1 0.00000000000000E+0
Node 653 0 -2.55000000000000E+1
-1.38000000000000E+1 0.00000000000000E+0
Node 654 0 -2.60000000000000E+1
-1.38000000000000E+1 0.00000000000000E+0
Node 655 0 -2.65000000000000E+1
-1.38000000000000E+1 0.00000000000000E+0
Node 656 0 -2.70000000000000E+1
-1.38000000000000E+1 0.00000000000000E+0
Node 657 0 -2.75000000000000E+1
-1.38000000000000E+1 0.00000000000000E+0
Node 658 0 -2.80000000000000E+1
-1.38000000000000E+1 0.00000000000000E+0
Node 659 0 -2.20000000000000E+1
-1.50000000000000E+1 6.36000000000000E+0
Node 660 0 -1.90000000000000E+1
-1.50000000000000E+1 6.36000000000000E+0
Node 661 0 -1.60000000000000E+1
-1.50000000000000E+1 6.36000000000000E+0
Node 662 0 -1.30000000000000E+1
-1.50000000000000E+1 6.36000000000000E+0
Node 663 0 -1.00000000000000E+1
-1.50000000000000E+1 6.36000000000000E+0
Node 664 0 -7.00000000000000E+0
-1.50000000000000E+1 6.36000000000000E+0
Node 665 0 -4.00000000000000E+0
-1.50000000000000E+1 6.36000000000000E+0
Node 666 0 -1.00000000000000E+0
-1.50000000000000E+1 6.36000000000000E+0
Node 667 0 -2.40000000000000E+1
0.00000000000000E+0 6.36000000000000E+0
Node 668 0 -2.10000000000000E+1
0.00000000000000E+0 6.36000000000000E+0
Node 669 0 -1.80000000000000E+1

```
0.00000000000000E+0      6.36000000000000E+0
   Node                   670       0    -1.50000000000000E+1
0.00000000000000E+0      6.36000000000000E+0
   Node                   671       0    -1.20000000000000E+1
0.00000000000000E+0      6.36000000000000E+0
   Node                   672       0    -9.00000000000000E+0
0.00000000000000E+0      6.36000000000000E+0
   Node                   673       0    -6.00000000000000E+0
0.00000000000000E+0      6.36000000000000E+0
   Node                   674       0    -3.00000000000000E+0
0.00000000000000E+0      6.36000000000000E+0
   Node                   675       0    -2.40000000000000E+1
-1.50000000000000E+1      6.36000000000000E+0
   Node                   676       0    -2.10000000000000E+1
-1.50000000000000E+1      6.36000000000000E+0
   Node                   677       0    -1.80000000000000E+1
-1.50000000000000E+1      6.36000000000000E+0
   Node                   678       0    -1.50000000000000E+1
-1.50000000000000E+1      6.36000000000000E+0
   Node                   679       0    -1.20000000000000E+1
-1.50000000000000E+1      6.36000000000000E+0
   Node                   680       0    -9.00000000000000E+0
-1.50000000000000E+1      6.36000000000000E+0
   Node                   681       0    -6.00000000000000E+0
-1.50000000000000E+1      6.36000000000000E+0
   Node                   682       0    -3.00000000000000E+0
-1.50000000000000E+1      6.36000000000000E+0
   Node                   683       0    -2.35000000000000E+1
-1.50000000000000E+1      6.36000000000000E+0
   Node                   684       0    -2.05000000000000E+1
-1.50000000000000E+1      6.36000000000000E+0
   Node                   685       0    -1.75000000000000E+1
-1.50000000000000E+1      6.36000000000000E+0
   Node                   686       0    -1.45000000000000E+1
-1.50000000000000E+1      6.36000000000000E+0
   Node                   687       0    -1.15000000000000E+1
-1.50000000000000E+1      6.36000000000000E+0
   Node                   688       0    -8.50000000000000E+0
-1.50000000000000E+1      6.36000000000000E+0
   Node                   689       0    -5.50000000000000E+0
-1.50000000000000E+1      6.36000000000000E+0
   Node                   690       0    -2.50000000000000E+0
-1.50000000000000E+1      6.36000000000000E+0
   Node                   691       0    -2.30000000000000E+1
-1.50000000000000E+1      6.36000000000000E+0
   Node                   692       0    -2.00000000000000E+1
-1.50000000000000E+1      6.36000000000000E+0
   Node                   693       0    -1.70000000000000E+1
-1.50000000000000E+1      6.36000000000000E+0
   Node                   694       0    -1.40000000000000E+1
-1.50000000000000E+1      6.36000000000000E+0
   Node                   695       0    -1.10000000000000E+1
-1.50000000000000E+1      6.36000000000000E+0
   Node                   696       0    -8.00000000000000E+0
```

-1.50000000000000E+1 6.36000000000000E+0
Node 697 0 -5.00000000000000E+0
-1.50000000000000E+1 6.36000000000000E+0
Node 698 0 -2.00000000000000E+0
-1.50000000000000E+1 6.36000000000000E+0
Node 699 0 -2.25000000000000E+1
-1.50000000000000E+1 6.36000000000000E+0
Node 700 0 -1.95000000000000E+1
-1.50000000000000E+1 6.36000000000000E+0
Node 701 0 -1.65000000000000E+1
-1.50000000000000E+1 6.36000000000000E+0
Node 702 0 -1.35000000000000E+1
-1.50000000000000E+1 6.36000000000000E+0
Node 703 0 -1.05000000000000E+1
-1.50000000000000E+1 6.36000000000000E+0
Node 704 0 -7.50000000000000E+0
-1.50000000000000E+1 6.36000000000000E+0
Node 705 0 -4.50000000000000E+0
-1.50000000000000E+1 6.36000000000000E+0
Node 706 0 -1.50000000000000E+0
-1.50000000000000E+1 6.36000000000000E+0
Node 707 0 -2.20000000000000E+1
0.00000000000000E+0 6.36000000000000E+0
Node 708 0 -1.90000000000000E+1
0.00000000000000E+0 6.36000000000000E+0
Node 709 0 -1.60000000000000E+1
0.00000000000000E+0 6.36000000000000E+0
Node 710 0 -1.30000000000000E+1
0.00000000000000E+0 6.36000000000000E+0
Node 711 0 -1.00000000000000E+1
0.00000000000000E+0 6.36000000000000E+0
Node 712 0 -7.00000000000000E+0
0.00000000000000E+0 6.36000000000000E+0
Node 713 0 -4.00000000000000E+0
0.00000000000000E+0 6.36000000000000E+0
Node 714 0 -1.00000000000000E+0
0.00000000000000E+0 6.36000000000000E+0
Node 715 0 -2.25000000000000E+1
0.00000000000000E+0 6.36000000000000E+0
Node 716 0 -1.95000000000000E+1
0.00000000000000E+0 6.36000000000000E+0
Node 717 0 -1.65000000000000E+1
0.00000000000000E+0 6.36000000000000E+0
Node 718 0 -1.35000000000000E+1
0.00000000000000E+0 6.36000000000000E+0
Node 719 0 -1.05000000000000E+1
0.00000000000000E+0 6.36000000000000E+0
Node 720 0 -7.50000000000000E+0
0.00000000000000E+0 6.36000000000000E+0
Node 721 0 -4.50000000000000E+0
0.00000000000000E+0 6.36000000000000E+0
Node 722 0 -1.50000000000000E+0
0.00000000000000E+0 6.36000000000000E+0
Node 723 0 -2.30000000000000E+1

```
0.00000000000000E+0      6.36000000000000E+0
   Node                   724       0    -2.00000000000000E+1
0.00000000000000E+0      6.36000000000000E+0
   Node                   725       0    -1.70000000000000E+1
0.00000000000000E+0      6.36000000000000E+0
   Node                   726       0    -1.40000000000000E+1
0.00000000000000E+0      6.36000000000000E+0
   Node                   727       0    -1.10000000000000E+1
0.00000000000000E+0      6.36000000000000E+0
   Node                   728       0    -8.00000000000000E+0
0.00000000000000E+0      6.36000000000000E+0
   Node                   729       0    -5.00000000000000E+0
0.00000000000000E+0      6.36000000000000E+0
   Node                   730       0    -2.00000000000000E+0
0.00000000000000E+0      6.36000000000000E+0
   Node                   731       0    -2.35000000000000E+1
0.00000000000000E+0      6.36000000000000E+0
   Node                   732       0    -2.05000000000000E+1
0.00000000000000E+0      6.36000000000000E+0
   Node                   733       0    -1.75000000000000E+1
0.00000000000000E+0      6.36000000000000E+0
   Node                   734       0    -1.45000000000000E+1
0.00000000000000E+0      6.36000000000000E+0
   Node                   735       0    -1.15000000000000E+1
0.00000000000000E+0      6.36000000000000E+0
   Node                   736       0    -8.50000000000000E+0
0.00000000000000E+0      6.36000000000000E+0
   Node                   737       0    -5.50000000000000E+0
0.00000000000000E+0      6.36000000000000E+0
   Node                   738       0    -2.50000000000000E+0
0.00000000000000E+0      6.36000000000000E+0
   Node                   739       0    -2.20000000000000E+1
-1.20000000000000E+1      6.36000000000000E+0
   Node                   740       0    -1.90000000000000E+1
-1.20000000000000E+1      6.36000000000000E+0
   Node                   741       0    -1.60000000000000E+1
-1.20000000000000E+1      6.36000000000000E+0
   Node                   742       0    -1.30000000000000E+1
-1.20000000000000E+1      6.36000000000000E+0
   Node                   743       0    -1.00000000000000E+1
-1.20000000000000E+1      6.36000000000000E+0
   Node                   744       0    -7.00000000000000E+0
-1.20000000000000E+1      6.36000000000000E+0
   Node                   745       0    -4.00000000000000E+0
-1.20000000000000E+1      6.36000000000000E+0
   Node                   746       0    -1.00000000000000E+0
-1.20000000000000E+1      6.36000000000000E+0
   Node                   747       0    -2.40000000000000E+1
-1.20000000000000E+1      6.36000000000000E+0
   Node                   748       0    -2.10000000000000E+1
-1.20000000000000E+1      6.36000000000000E+0
   Node                   749       0    -1.80000000000000E+1
-1.20000000000000E+1      6.36000000000000E+0
   Node                   750       0    -1.50000000000000E+1
```

-1.20000000000000E+1 6.36000000000000E+0
Node 751 0 -1.20000000000000E+1
-1.20000000000000E+1 6.36000000000000E+0
Node 752 0 -9.00000000000000E+0
-1.20000000000000E+1 6.36000000000000E+0
Node 753 0 -6.00000000000000E+0
-1.20000000000000E+1 6.36000000000000E+0
Node 754 0 -3.00000000000000E+0
-1.20000000000000E+1 6.36000000000000E+0
Node 755 0 -2.35000000000000E+1
-1.20000000000000E+1 6.36000000000000E+0
Node 756 0 -2.05000000000000E+1
-1.20000000000000E+1 6.36000000000000E+0
Node 757 0 -1.75000000000000E+1
-1.20000000000000E+1 6.36000000000000E+0
Node 758 0 -1.45000000000000E+1
-1.20000000000000E+1 6.36000000000000E+0
Node 759 0 -1.15000000000000E+1
-1.20000000000000E+1 6.36000000000000E+0
Node 760 0 -8.50000000000000E+0
-1.20000000000000E+1 6.36000000000000E+0
Node 761 0 -5.50000000000000E+0
-1.20000000000000E+1 6.36000000000000E+0
Node 762 0 -2.50000000000000E+0
-1.20000000000000E+1 6.36000000000000E+0
Node 763 0 -2.30000000000000E+1
-1.20000000000000E+1 6.36000000000000E+0
Node 764 0 -2.00000000000000E+1
-1.20000000000000E+1 6.36000000000000E+0
Node 765 0 -1.70000000000000E+1
-1.20000000000000E+1 6.36000000000000E+0
Node 766 0 -1.40000000000000E+1
-1.20000000000000E+1 6.36000000000000E+0
Node 767 0 -1.10000000000000E+1
-1.20000000000000E+1 6.36000000000000E+0
Node 768 0 -8.00000000000000E+0
-1.20000000000000E+1 6.36000000000000E+0
Node 769 0 -5.00000000000000E+0
-1.20000000000000E+1 6.36000000000000E+0
Node 770 0 -2.00000000000000E+0
-1.20000000000000E+1 6.36000000000000E+0
Node 771 0 -2.25000000000000E+1
-1.20000000000000E+1 6.36000000000000E+0
Node 772 0 -1.95000000000000E+1
-1.20000000000000E+1 6.36000000000000E+0
Node 773 0 -1.65000000000000E+1
-1.20000000000000E+1 6.36000000000000E+0
Node 774 0 -1.35000000000000E+1
-1.20000000000000E+1 6.36000000000000E+0
Node 775 0 -1.05000000000000E+1
-1.20000000000000E+1 6.36000000000000E+0
Node 776 0 -7.50000000000000E+0
-1.20000000000000E+1 6.36000000000000E+0
Node 777 0 -4.50000000000000E+0

```
-1.20000000000000E+1      6.36000000000000E+0
   Node                   778       0    -1.50000000000000E+0
-1.20000000000000E+1      6.36000000000000E+0
   Node                   779       0    -2.40000000000000E+1
-3.00000000000000E+0      6.36000000000000E+0
   Node                   780       0    -2.10000000000000E+1
-3.00000000000000E+0      6.36000000000000E+0
   Node                   781       0    -1.80000000000000E+1
-3.00000000000000E+0      6.36000000000000E+0
   Node                   782       0    -1.50000000000000E+1
-3.00000000000000E+0      6.36000000000000E+0
   Node                   783       0    -1.20000000000000E+1
-3.00000000000000E+0      6.36000000000000E+0
   Node                   784       0    -9.00000000000000E+0
-3.00000000000000E+0      6.36000000000000E+0
   Node                   785       0    -6.00000000000000E+0
-3.00000000000000E+0      6.36000000000000E+0
   Node                   786       0    -3.00000000000000E+0
-3.00000000000000E+0      6.36000000000000E+0
   Node                   787       0    -2.20000000000000E+1
-3.00000000000000E+0      6.36000000000000E+0
   Node                   788       0    -1.90000000000000E+1
-3.00000000000000E+0      6.36000000000000E+0
   Node                   789       0    -1.60000000000000E+1
-3.00000000000000E+0      6.36000000000000E+0
   Node                   790       0    -1.30000000000000E+1
-3.00000000000000E+0      6.36000000000000E+0
   Node                   791       0    -1.00000000000000E+1
-3.00000000000000E+0      6.36000000000000E+0
   Node                   792       0    -7.00000000000000E+0
-3.00000000000000E+0      6.36000000000000E+0
   Node                   793       0    -4.00000000000000E+0
-3.00000000000000E+0      6.36000000000000E+0
   Node                   794       0    -1.00000000000000E+0
-3.00000000000000E+0      6.36000000000000E+0
   Node                   795       0    -2.25000000000000E+1
-3.00000000000000E+0      6.36000000000000E+0
   Node                   796       0    -1.95000000000000E+1
-3.00000000000000E+0      6.36000000000000E+0
   Node                   797       0    -1.65000000000000E+1
-3.00000000000000E+0      6.36000000000000E+0
   Node                   798       0    -1.35000000000000E+1
-3.00000000000000E+0      6.36000000000000E+0
   Node                   799       0    -1.05000000000000E+1
-3.00000000000000E+0      6.36000000000000E+0
   Node                   800       0    -7.50000000000000E+0
-3.00000000000000E+0      6.36000000000000E+0
   Node                   801       0    -4.50000000000000E+0
-3.00000000000000E+0      6.36000000000000E+0
   Node                   802       0    -1.50000000000000E+0
-3.00000000000000E+0      6.36000000000000E+0
   Node                   803       0    -2.30000000000000E+1
-3.00000000000000E+0      6.36000000000000E+0
   Node                   804       0    -2.00000000000000E+1
```

```
-3.00000000000000E+0      6.36000000000000E+0
   Node                   805       0    -1.70000000000000E+1
-3.00000000000000E+0      6.36000000000000E+0
   Node                   806       0    -1.40000000000000E+1
-3.00000000000000E+0      6.36000000000000E+0
   Node                   807       0    -1.10000000000000E+1
-3.00000000000000E+0      6.36000000000000E+0
   Node                   808       0    -8.00000000000000E+0
-3.00000000000000E+0      6.36000000000000E+0
   Node                   809       0    -5.00000000000000E+0
-3.00000000000000E+0      6.36000000000000E+0
   Node                   810       0    -2.00000000000000E+0
-3.00000000000000E+0      6.36000000000000E+0
   Node                   811       0    -2.35000000000000E+1
-3.00000000000000E+0      6.36000000000000E+0
   Node                   812       0    -2.05000000000000E+1
-3.00000000000000E+0      6.36000000000000E+0
   Node                   813       0    -1.75000000000000E+1
-3.00000000000000E+0      6.36000000000000E+0
   Node                   814       0    -1.45000000000000E+1
-3.00000000000000E+0      6.36000000000000E+0
   Node                   815       0    -1.15000000000000E+1
-3.00000000000000E+0      6.36000000000000E+0
   Node                   816       0    -8.50000000000000E+0
-3.00000000000000E+0      6.36000000000000E+0
   Node                   817       0    -5.50000000000000E+0
-3.00000000000000E+0      6.36000000000000E+0
   Node                   818       0    -2.50000000000000E+0
-3.00000000000000E+0      6.36000000000000E+0
   Node                   819       0     0.00000000000000E+0
-1.35500000000000E+1      0.00000000000000E+0
   Node                   820       0    -5.00000000000000E-1
-1.35500000000000E+1      0.00000000000000E+0
   Node                   821       0    -1.00000000000000E+0
-1.35500000000000E+1      0.00000000000000E+0
   Node                   822       0    -3.00000000000000E+0
-1.35500000000000E+1      0.00000000000000E+0
   Node                   823       0    -3.50000000000000E+0
-1.35500000000000E+1      0.00000000000000E+0
   Node                   824       0    -2.50000000000000E+0
-1.35500000000000E+1      0.00000000000000E+0
   Node                   825       0    -2.00000000000000E+0
-1.35500000000000E+1      0.00000000000000E+0
   Node                   826       0    -1.50000000000000E+0
-1.35500000000000E+1      0.00000000000000E+0
   Node                   827       0    -3.95000000000000E+0
-1.35500000000000E+1      0.00000000000000E+0
   Node                   828       0    -4.40000000000000E+0
-1.35500000000000E+1      0.00000000000000E+0
   Node                   829       0    -4.85000000000000E+0
-1.35500000000000E+1      0.00000000000000E+0
   Node                   830       0    -5.30000000000000E+0
-1.35500000000000E+1      0.00000000000000E+0
   Node                   831       0    -5.75000000000000E+0
```

```
-1.35500000000000E+1      0.00000000000000E+0
   Node                   832       0    -6.50000000000000E+0
-1.35500000000000E+1      0.00000000000000E+0
   Node                   833       0    -7.00000000000000E+0
-1.35500000000000E+1      0.00000000000000E+0
   Node                   834       0    -7.50000000000000E+0
-1.35500000000000E+1      0.00000000000000E+0
   Node                   835       0    -8.00000000000000E+0
-1.35500000000000E+1      0.00000000000000E+0
   Node                   836       0    -8.50000000000000E+0
-1.35500000000000E+1      0.00000000000000E+0
   Node                   837       0    -9.00000000000000E+0
-1.35500000000000E+1      0.00000000000000E+0
   Node                   838       0    -9.50000000000000E+0
-1.35500000000000E+1      0.00000000000000E+0
   Node                   839       0    -1.00000000000000E+1
-1.35500000000000E+1      0.00000000000000E+0
   Node                   840       0    -1.05000000000000E+1
-1.35500000000000E+1      0.00000000000000E+0
   Node                   841       0    -1.10000000000000E+1
-1.35500000000000E+1      0.00000000000000E+0
   Node                   842       0    -1.15000000000000E+1
-1.35500000000000E+1      0.00000000000000E+0
   Node                   843       0    -1.20000000000000E+1
-1.35500000000000E+1      0.00000000000000E+0
   Node                   844       0    -1.25000000000000E+1
-1.35500000000000E+1      0.00000000000000E+0
   Node                   845       0    -1.30000000000000E+1
-1.35500000000000E+1      0.00000000000000E+0
   Node                   846       0    -1.35000000000000E+1
-1.35500000000000E+1      0.00000000000000E+0
   Node                   847       0    -1.40000000000000E+1
-1.35500000000000E+1      0.00000000000000E+0
   Node                   848       0    -1.45000000000000E+1
-1.35500000000000E+1      0.00000000000000E+0
   Node                   849       0    -1.50000000000000E+1
-1.35500000000000E+1      0.00000000000000E+0
   Node                   850       0    -1.55000000000000E+1
-1.35500000000000E+1      0.00000000000000E+0
   Node                   851       0    -1.60000000000000E+1
-1.35500000000000E+1      0.00000000000000E+0
   Node                   852       0    -1.65000000000000E+1
-1.35500000000000E+1      0.00000000000000E+0
   Node                   853       0    -1.70000000000000E+1
-1.35500000000000E+1      0.00000000000000E+0
   Node                   854       0    -1.75000000000000E+1
-1.35500000000000E+1      0.00000000000000E+0
   Node                   855       0    -1.80000000000000E+1
-1.35500000000000E+1      0.00000000000000E+0
   Node                   856       0    -1.85000000000000E+1
-1.35500000000000E+1      0.00000000000000E+0
   Node                   857       0    -1.89375000000000E+1
-1.35500000000000E+1      0.00000000000000E+0
   Node                   858       0    -1.93750000000000E+1
```

```
-1.35500000000000E+1      0.00000000000000E+0
   Node                   859       0    -1.98125000000000E+1
-1.35500000000000E+1      0.00000000000000E+0
   Node                   860       0    -2.02500000000000E+1
-1.35500000000000E+1      0.00000000000000E+0
   Node                   861       0    -2.07500000000000E+1
-1.35500000000000E+1      0.00000000000000E+0
   Node                   862       0    -2.15000000000000E+1
-1.35500000000000E+1      0.00000000000000E+0
   Node                   863       0    -2.20000000000000E+1
-1.35500000000000E+1      0.00000000000000E+0
   Node                   864       0    -2.25000000000000E+1
-1.35500000000000E+1      0.00000000000000E+0
   Node                   865       0    -2.30000000000000E+1
-1.35500000000000E+1      0.00000000000000E+0
   Node                   866       0    -2.35000000000000E+1
-1.35500000000000E+1      0.00000000000000E+0
   Node                   867       0    -2.40000000000000E+1
-1.35500000000000E+1      0.00000000000000E+0
   Node                   868       0    -2.45000000000000E+1
-1.35500000000000E+1      0.00000000000000E+0
   Node                   869       0    -2.50000000000000E+1
-1.35500000000000E+1      0.00000000000000E+0
   Node                   870       0    -2.55000000000000E+1
-1.35500000000000E+1      0.00000000000000E+0
   Node                   871       0    -2.60000000000000E+1
-1.35500000000000E+1      0.00000000000000E+0
   Node                   872       0    -2.65000000000000E+1
-1.35500000000000E+1      0.00000000000000E+0
   Node                   873       0    -2.70000000000000E+1
-1.35500000000000E+1      0.00000000000000E+0
   Node                   874       0    -2.75000000000000E+1
-1.35500000000000E+1      0.00000000000000E+0
   Node                   875       0    -2.80000000000000E+1
-1.35500000000000E+1      0.00000000000000E+0
   Node                   876       0    -5.00000000000000E-1
-1.52500000000000E+1      0.00000000000000E+0
   Node                   877       0     0.00000000000000E+0
-1.52500000000000E+1      0.00000000000000E+0
   Node                   878       0    -1.00000000000000E+0
-1.52500000000000E+1      0.00000000000000E+0
   Node                   879       0    -3.50000000000000E+0
-1.52500000000000E+1      0.00000000000000E+0
   Node                   880       0    -3.00000000000000E+0
-1.52500000000000E+1      0.00000000000000E+0
   Node                   881       0    -2.50000000000000E+0
-1.52500000000000E+1      0.00000000000000E+0
   Node                   882       0    -2.00000000000000E+0
-1.52500000000000E+1      0.00000000000000E+0
   Node                   883       0    -1.50000000000000E+0
-1.52500000000000E+1      0.00000000000000E+0
   Node                   884       0    -3.95000000000000E+0
-1.52500000000000E+1      0.00000000000000E+0
   Node                   885       0    -4.40000000000000E+0
```

-1.52500000000000E+1 0.00000000000000E+0
Node 886 0 -4.85000000000000E+0
-1.52500000000000E+1 0.00000000000000E+0
Node 887 0 -5.30000000000000E+0
-1.52500000000000E+1 0.00000000000000E+0
Node 888 0 -5.75000000000000E+0
-1.52500000000000E+1 0.00000000000000E+0
Node 889 0 -6.50000000000000E+0
-1.52500000000000E+1 0.00000000000000E+0
Node 890 0 -7.00000000000000E+0
-1.52500000000000E+1 0.00000000000000E+0
Node 891 0 -7.50000000000000E+0
-1.52500000000000E+1 0.00000000000000E+0
Node 892 0 -8.00000000000000E+0
-1.52500000000000E+1 0.00000000000000E+0
Node 893 0 -8.50000000000000E+0
-1.52500000000000E+1 0.00000000000000E+0
Node 894 0 -9.00000000000000E+0
-1.52500000000000E+1 0.00000000000000E+0
Node 895 0 -9.50000000000000E+0
-1.52500000000000E+1 0.00000000000000E+0
Node 896 0 -1.00000000000000E+1
-1.52500000000000E+1 0.00000000000000E+0
Node 897 0 -1.05000000000000E+1
-1.52500000000000E+1 0.00000000000000E+0
Node 898 0 -1.10000000000000E+1
-1.52500000000000E+1 0.00000000000000E+0
Node 899 0 -1.15000000000000E+1
-1.52500000000000E+1 0.00000000000000E+0
Node 900 0 -1.20000000000000E+1
-1.52500000000000E+1 0.00000000000000E+0
Node 901 0 -1.25000000000000E+1
-1.52500000000000E+1 0.00000000000000E+0
Node 902 0 -1.30000000000000E+1
-1.52500000000000E+1 0.00000000000000E+0
Node 903 0 -1.35000000000000E+1
-1.52500000000000E+1 0.00000000000000E+0
Node 904 0 -1.40000000000000E+1
-1.52500000000000E+1 0.00000000000000E+0
Node 905 0 -1.45000000000000E+1
-1.52500000000000E+1 0.00000000000000E+0
Node 906 0 -1.50000000000000E+1
-1.52500000000000E+1 0.00000000000000E+0
Node 907 0 -1.55000000000000E+1
-1.52500000000000E+1 0.00000000000000E+0
Node 908 0 -1.60000000000000E+1
-1.52500000000000E+1 0.00000000000000E+0
Node 909 0 -1.65000000000000E+1
-1.52500000000000E+1 0.00000000000000E+0
Node 910 0 -1.70000000000000E+1
-1.52500000000000E+1 0.00000000000000E+0
Node 911 0 -1.75000000000000E+1
-1.52500000000000E+1 0.00000000000000E+0
Node 912 0 -1.80000000000000E+1

-1.52500000000000E+1 0.00000000000000E+0
Node 913 0 -1.85000000000000E+1
-1.52500000000000E+1 0.00000000000000E+0
Node 914 0 -1.89375000000000E+1
-1.52500000000000E+1 0.00000000000000E+0
Node 915 0 -1.93750000000000E+1
-1.52500000000000E+1 0.00000000000000E+0
Node 916 0 -1.98125000000000E+1
-1.52500000000000E+1 0.00000000000000E+0
Node 917 0 -2.02500000000000E+1
-1.52500000000000E+1 0.00000000000000E+0
Node 918 0 -2.07500000000000E+1
-1.52500000000000E+1 0.00000000000000E+0
Node 919 0 -2.15000000000000E+1
-1.52500000000000E+1 0.00000000000000E+0
Node 920 0 -2.20000000000000E+1
-1.52500000000000E+1 0.00000000000000E+0
Node 921 0 -2.25000000000000E+1
-1.52500000000000E+1 0.00000000000000E+0
Node 922 0 -2.30000000000000E+1
-1.52500000000000E+1 0.00000000000000E+0
Node 923 0 -2.35000000000000E+1
-1.52500000000000E+1 0.00000000000000E+0
Node 924 0 -2.40000000000000E+1
-1.52500000000000E+1 0.00000000000000E+0
Node 925 0 -2.45000000000000E+1
-1.52500000000000E+1 0.00000000000000E+0
Node 926 0 -2.50000000000000E+1
-1.52500000000000E+1 0.00000000000000E+0
Node 927 0 -2.55000000000000E+1
-1.52500000000000E+1 0.00000000000000E+0
Node 928 0 -2.60000000000000E+1
-1.52500000000000E+1 0.00000000000000E+0
Node 929 0 -2.65000000000000E+1
-1.52500000000000E+1 0.00000000000000E+0
Node 930 0 -2.70000000000000E+1
-1.52500000000000E+1 0.00000000000000E+0
Node 931 0 -2.75000000000000E+1
-1.52500000000000E+1 0.00000000000000E+0
Node 932 0 -2.80000000000000E+1
-1.52500000000000E+1 0.00000000000000E+0
Node 933 0 0.00000000000000E+0
2.50000000000000E-1 0.00000000000000E+0
Node 934 0 -5.00000000000000E-1
2.50000000000000E-1 0.00000000000000E+0
Node 935 0 -1.00000000000000E+0
2.50000000000000E-1 0.00000000000000E+0
Node 936 0 -3.00000000000000E+0
2.50000000000000E-1 0.00000000000000E+0
Node 937 0 -3.50000000000000E+0
2.50000000000000E-1 0.00000000000000E+0
Node 938 0 -2.50000000000000E+0
2.50000000000000E-1 0.00000000000000E+0
Node 939 0 -2.00000000000000E+0

2.50000000000000E-1 0.00000000000000E+0
Node 940 0 -1.50000000000000E+0
2.50000000000000E-1 0.00000000000000E+0
Node 941 0 -3.95000000000000E+0
2.50000000000000E-1 0.00000000000000E+0
Node 942 0 -4.40000000000000E+0
2.50000000000000E-1 0.00000000000000E+0
Node 943 0 -4.85000000000000E+0
2.50000000000000E-1 0.00000000000000E+0
Node 944 0 -5.30000000000000E+0
2.50000000000000E-1 0.00000000000000E+0
Node 945 0 -5.75000000000000E+0
2.50000000000000E-1 0.00000000000000E+0
Node 946 0 -6.50000000000000E+0
2.50000000000000E-1 0.00000000000000E+0
Node 947 0 -7.00000000000000E+0
2.50000000000000E-1 0.00000000000000E+0
Node 948 0 -7.50000000000000E+0
2.50000000000000E-1 0.00000000000000E+0
Node 949 0 -8.00000000000000E+0
2.50000000000000E-1 0.00000000000000E+0
Node 950 0 -8.50000000000000E+0
2.50000000000000E-1 0.00000000000000E+0
Node 951 0 -9.00000000000000E+0
2.50000000000000E-1 0.00000000000000E+0
Node 952 0 -9.50000000000000E+0
2.50000000000000E-1 0.00000000000000E+0
Node 953 0 -1.00000000000000E+1
2.50000000000000E-1 0.00000000000000E+0
Node 954 0 -1.05000000000000E+1
2.50000000000000E-1 0.00000000000000E+0
Node 955 0 -1.10000000000000E+1
2.50000000000000E-1 0.00000000000000E+0
Node 956 0 -1.15000000000000E+1
2.50000000000000E-1 0.00000000000000E+0
Node 957 0 -1.20000000000000E+1
2.50000000000000E-1 0.00000000000000E+0
Node 958 0 -1.25000000000000E+1
2.50000000000000E-1 0.00000000000000E+0
Node 959 0 -1.30000000000000E+1
2.50000000000000E-1 0.00000000000000E+0
Node 960 0 -1.35000000000000E+1
2.50000000000000E-1 0.00000000000000E+0
Node 961 0 -1.40000000000000E+1
2.50000000000000E-1 0.00000000000000E+0
Node 962 0 -1.45000000000000E+1
2.50000000000000E-1 0.00000000000000E+0
Node 963 0 -1.50000000000000E+1
2.50000000000000E-1 0.00000000000000E+0
Node 964 0 -1.55000000000000E+1
2.50000000000000E-1 0.00000000000000E+0
Node 965 0 -1.60000000000000E+1
2.50000000000000E-1 0.00000000000000E+0
Node 966 0 -1.65000000000000E+1

```
2.50000000000000E-1      0.00000000000000E+0
   Node                   967       0    -1.70000000000000E+1
2.50000000000000E-1      0.00000000000000E+0
   Node                   968       0    -1.75000000000000E+1
2.50000000000000E-1      0.00000000000000E+0
   Node                   969       0    -1.80000000000000E+1
2.50000000000000E-1      0.00000000000000E+0
   Node                   970       0    -1.85000000000000E+1
2.50000000000000E-1      0.00000000000000E+0
   Node                   971       0    -1.89375000000000E+1
2.50000000000000E-1      0.00000000000000E+0
   Node                   972       0    -1.93750000000000E+1
2.50000000000000E-1      0.00000000000000E+0
   Node                   973       0    -1.98125000000000E+1
2.50000000000000E-1      0.00000000000000E+0
   Node                   974       0    -2.02500000000000E+1
2.50000000000000E-1      0.00000000000000E+0
   Node                   975       0    -2.07500000000000E+1
2.50000000000000E-1      0.00000000000000E+0
   Node                   976       0    -2.15000000000000E+1
2.50000000000000E-1      0.00000000000000E+0
   Node                   977       0    -2.20000000000000E+1
2.50000000000000E-1      0.00000000000000E+0
   Node                   978       0    -2.25000000000000E+1
2.50000000000000E-1      0.00000000000000E+0
   Node                   979       0    -2.30000000000000E+1
2.50000000000000E-1      0.00000000000000E+0
   Node                   980       0    -2.35000000000000E+1
2.50000000000000E-1      0.00000000000000E+0
   Node                   981       0    -2.40000000000000E+1
2.50000000000000E-1      0.00000000000000E+0
   Node                   982       0    -2.45000000000000E+1
2.50000000000000E-1      0.00000000000000E+0
   Node                   983       0    -2.50000000000000E+1
2.50000000000000E-1      0.00000000000000E+0
   Node                   984       0    -2.55000000000000E+1
2.50000000000000E-1      0.00000000000000E+0
   Node                   985       0    -2.60000000000000E+1
2.50000000000000E-1      0.00000000000000E+0
   Node                   986       0    -2.65000000000000E+1
2.50000000000000E-1      0.00000000000000E+0
   Node                   987       0    -2.70000000000000E+1
2.50000000000000E-1      0.00000000000000E+0
   Node                   988       0    -2.75000000000000E+1
2.50000000000000E-1      0.00000000000000E+0
   Node                   989       0    -2.80000000000000E+1
2.50000000000000E-1      0.00000000000000E+0
   Node                   990       0    -5.00000000000000E-1
-1.45000000000000E+0      0.00000000000000E+0
   Node                   991       0     0.00000000000000E+0
-1.45000000000000E+0      0.00000000000000E+0
   Node                   992       0    -1.00000000000000E+0
-1.45000000000000E+0      0.00000000000000E+0
   Node                   993       0    -3.50000000000000E+0
```

```
-1.45000000000000E+0      0.00000000000000E+0
   Node                   994       0    -3.00000000000000E+0
-1.45000000000000E+0      0.00000000000000E+0
   Node                   995       0    -2.50000000000000E+0
-1.45000000000000E+0      0.00000000000000E+0
   Node                   996       0    -2.00000000000000E+0
-1.45000000000000E+0      0.00000000000000E+0
   Node                   997       0    -1.50000000000000E+0
-1.45000000000000E+0      0.00000000000000E+0
   Node                   998       0    -3.95000000000000E+0
-1.45000000000000E+0      0.00000000000000E+0
   Node                   999       0    -4.40000000000000E+0
-1.45000000000000E+0      0.00000000000000E+0
   Node                  1000       0    -4.85000000000000E+0
-1.45000000000000E+0      0.00000000000000E+0
   Node                  1001       0    -5.30000000000000E+0
-1.45000000000000E+0      0.00000000000000E+0
   Node                  1002       0    -5.75000000000000E+0
-1.45000000000000E+0      0.00000000000000E+0
   Node                  1003       0    -6.50000000000000E+0
-1.45000000000000E+0      0.00000000000000E+0
   Node                  1004       0    -7.00000000000000E+0
-1.45000000000000E+0      0.00000000000000E+0
   Node                  1005       0    -7.50000000000000E+0
-1.45000000000000E+0      0.00000000000000E+0
   Node                  1006       0    -8.00000000000000E+0
-1.45000000000000E+0      0.00000000000000E+0
   Node                  1007       0    -8.50000000000000E+0
-1.45000000000000E+0      0.00000000000000E+0
   Node                  1008       0    -9.00000000000000E+0
-1.45000000000000E+0      0.00000000000000E+0
   Node                  1009       0    -9.50000000000000E+0
-1.45000000000000E+0      0.00000000000000E+0
   Node                  1010       0    -1.00000000000000E+1
-1.45000000000000E+0      0.00000000000000E+0
   Node                  1011       0    -1.05000000000000E+1
-1.45000000000000E+0      0.00000000000000E+0
   Node                  1012       0    -1.10000000000000E+1
-1.45000000000000E+0      0.00000000000000E+0
   Node                  1013       0    -1.15000000000000E+1
-1.45000000000000E+0      0.00000000000000E+0
   Node                  1014       0    -1.20000000000000E+1
-1.45000000000000E+0      0.00000000000000E+0
   Node                  1015       0    -1.25000000000000E+1
-1.45000000000000E+0      0.00000000000000E+0
   Node                  1016       0    -1.30000000000000E+1
-1.45000000000000E+0      0.00000000000000E+0
   Node                  1017       0    -1.35000000000000E+1
-1.45000000000000E+0      0.00000000000000E+0
   Node                  1018       0    -1.40000000000000E+1
-1.45000000000000E+0      0.00000000000000E+0
   Node                  1019       0    -1.45000000000000E+1
-1.45000000000000E+0      0.00000000000000E+0
   Node                  1020       0    -1.50000000000000E+1
```

```
-1.45000000000000E+0      0.00000000000000E+0
   Node                  1021       0    -1.55000000000000E+1
-1.45000000000000E+0      0.00000000000000E+0
   Node                  1022       0    -1.60000000000000E+1
-1.45000000000000E+0      0.00000000000000E+0
   Node                  1023       0    -1.65000000000000E+1
-1.45000000000000E+0      0.00000000000000E+0
   Node                  1024       0    -1.70000000000000E+1
-1.45000000000000E+0      0.00000000000000E+0
   Node                  1025       0    -1.75000000000000E+1
-1.45000000000000E+0      0.00000000000000E+0
   Node                  1026       0    -1.80000000000000E+1
-1.45000000000000E+0      0.00000000000000E+0
   Node                  1027       0    -1.85000000000000E+1
-1.45000000000000E+0      0.00000000000000E+0
   Node                  1028       0    -1.89375000000000E+1
-1.45000000000000E+0      0.00000000000000E+0
   Node                  1029       0    -1.93750000000000E+1
-1.45000000000000E+0      0.00000000000000E+0
   Node                  1030       0    -1.98125000000000E+1
-1.45000000000000E+0      0.00000000000000E+0
   Node                  1031       0    -2.02500000000000E+1
-1.45000000000000E+0      0.00000000000000E+0
   Node                  1032       0    -2.07500000000000E+1
-1.45000000000000E+0      0.00000000000000E+0
   Node                  1033       0    -2.15000000000000E+1
-1.45000000000000E+0      0.00000000000000E+0
   Node                  1034       0    -2.20000000000000E+1
-1.45000000000000E+0      0.00000000000000E+0
   Node                  1035       0    -2.25000000000000E+1
-1.45000000000000E+0      0.00000000000000E+0
   Node                  1036       0    -2.30000000000000E+1
-1.45000000000000E+0      0.00000000000000E+0
   Node                  1037       0    -2.35000000000000E+1
-1.45000000000000E+0      0.00000000000000E+0
   Node                  1038       0    -2.40000000000000E+1
-1.45000000000000E+0      0.00000000000000E+0
   Node                  1039       0    -2.45000000000000E+1
-1.45000000000000E+0      0.00000000000000E+0
   Node                  1040       0    -2.50000000000000E+1
-1.45000000000000E+0      0.00000000000000E+0
   Node                  1041       0    -2.55000000000000E+1
-1.45000000000000E+0      0.00000000000000E+0
   Node                  1042       0    -2.60000000000000E+1
-1.45000000000000E+0      0.00000000000000E+0
   Node                  1043       0    -2.65000000000000E+1
-1.45000000000000E+0      0.00000000000000E+0
   Node                  1044       0    -2.70000000000000E+1
-1.45000000000000E+0      0.00000000000000E+0
   Node                  1045       0    -2.75000000000000E+1
-1.45000000000000E+0      0.00000000000000E+0
   Node                  1046       0    -2.80000000000000E+1
-1.45000000000000E+0      0.00000000000000E+0
   Node                  1047       0    -5.00000000000000E-1
```

```
0.00000000000000E+0     -7.00000000000000E-1
   Node                  1048       0    -2.75000000000000E+1
0.00000000000000E+0     -7.00000000000000E-1
   Node                  1049       0    -5.00000000000000E-1
-1.50000000000000E+1     -7.00000000000000E-1
   Node                  1050       0    -2.75000000000000E+1
-1.50000000000000E+1     -7.00000000000000E-1
   Node                  1051       0    -5.00000000000000E-1
-1.20000000000000E+0     -7.00000000000000E-1
   Node                  1052       0    -2.75000000000000E+1
-1.20000000000000E+0     -7.00000000000000E-1
   Node                  1053       0    -5.00000000000000E-1
-1.38000000000000E+1     -7.00000000000000E-1
   Node                  1054       0    -2.75000000000000E+1
-1.38000000000000E+1     -7.00000000000000E-1
   Node                  1055       0    -5.00000000000000E-1
0.00000000000000E+0     -9.00000000000000E-1
   Node                  1056       0    -2.75000000000000E+1
0.00000000000000E+0     -9.00000000000000E-1
   Node                  1057       0    -5.00000000000000E-1
-1.50000000000000E+1     -9.00000000000000E-1
   Node                  1058       0    -2.75000000000000E+1
-1.50000000000000E+1     -9.00000000000000E-1
   Node                  1059       0    -5.00000000000000E-1
-1.20000000000000E+0     -9.00000000000000E-1
   Node                  1060       0    -2.75000000000000E+1
-1.20000000000000E+0     -9.00000000000000E-1
   Node                  1061       0    -5.00000000000000E-1
-1.38000000000000E+1     -9.00000000000000E-1
   Node                  1062       0    -2.75000000000000E+1
-1.38000000000000E+1     -9.00000000000000E-1
   Node                  1063       0    -2.75000000000000E+1
-1.42000000000000E+1     -9.00000000000000E-1
   Node                  1064       0    -2.75000000000000E+1
-8.00000000000001E-1     -9.00000000000000E-1
   Node                  1065       0    -5.00000000000000E-1
-1.42000000000000E+1     -9.00000000000000E-1
   Node                  1066       0    -5.00000000000000E-1
-8.00000000000001E-1     -9.00000000000000E-1
   Node                  1067       0    -2.75000000000000E+1
-1.42000000000000E+1     -1.70000000000000E+0
   Node                  1068       0    -2.75000000000000E+1
-8.00000000000001E-1     -1.70000000000000E+0
   Node                  1069       0    -5.00000000000000E-1
-1.42000000000000E+1     -1.70000000000000E+0
   Node                  1070       0    -5.00000000000000E-1
-8.00000000000001E-1     -1.70000000000000E+0

/ ____________________________________________________________________________
/ BEAM ELEMENTS

   Beam                     1       0       5       1     398     399
   Beam                     2       0       5       1     400     401
   Beam                     3       0       5       1     402     403
```

Beam	4	0	5	1	403	404
Beam	5	0	5	1	405	406
Beam	6	0	5	1	407	408
Beam	7	0	5	1	409	410
Beam	8	0	5	1	411	412
Beam	9	0	5	1	413	414
Beam	10	0	5	1	415	416
Beam	11	0	5	1	417	418
Beam	12	0	5	1	419	420
Beam	13	0	9	4	132	12
Beam	14	0	9	4	158	14
Beam	15	0	9	4	184	16
Beam	16	0	9	4	210	18
Beam	17	0	9	4	236	20
Beam	18	0	9	4	262	22
Beam	19	0	9	4	288	24
Beam	20	0	9	4	314	26
Beam	21	0	9	4	340	28
Beam	22	0	9	4	106	30
Beam	23	0	10	5	431	429
Beam	24	0	10	5	345	30
Beam	25	0	5	1	420	432
Beam	26	0	5	1	414	415
Beam	27	0	5	1	418	433
Beam	28	0	5	1	433	434
Beam	29	0	5	1	434	435
Beam	30	0	5	1	435	436
Beam	31	0	5	1	436	419
Beam	32	0	5	1	416	437
Beam	33	0	5	1	437	438
Beam	34	0	5	1	438	439
Beam	35	0	5	1	439	440
Beam	36	0	5	1	440	417
Beam	37	0	5	1	399	441
Beam	38	0	5	1	441	442
Beam	39	0	5	1	442	443
Beam	40	0	5	1	443	444
Beam	41	0	5	1	444	400
Beam	42	0	5	1	404	445
Beam	43	0	5	1	445	446
Beam	44	0	5	1	446	447
Beam	45	0	5	1	447	448
Beam	46	0	5	1	448	405
Beam	47	0	5	1	406	449
Beam	48	0	5	1	449	450
Beam	49	0	5	1	450	451
Beam	50	0	5	1	451	452
Beam	51	0	5	1	452	407
Beam	52	0	5	1	408	453
Beam	53	0	5	1	453	454
Beam	54	0	5	1	454	455
Beam	55	0	5	1	455	456
Beam	56	0	5	1	456	409
Beam	57	0	5	1	410	457

Beam	58	0	5	1	457	458
Beam	59	0	5	1	458	459
Beam	60	0	5	1	459	460
Beam	61	0	5	1	460	411
Beam	62	0	5	1	412	461
Beam	63	0	5	1	461	462
Beam	64	0	5	1	462	413
Beam	65	0	5	1	401	463
Beam	66	0	5	1	463	464
Beam	67	0	5	1	464	465
Beam	68	0	5	1	465	402
Beam	69	0	8	3	31	32
Beam	70	0	8	3	32	33
Beam	71	0	8	3	33	34
Beam	72	0	8	3	34	35
Beam	73	0	8	3	35	12
Beam	74	0	8	3	36	37
Beam	75	0	8	3	37	38
Beam	76	0	8	3	38	39
Beam	77	0	8	3	39	40
Beam	78	0	8	3	40	14
Beam	79	0	8	3	41	42
Beam	80	0	8	3	42	43
Beam	81	0	8	3	43	44
Beam	82	0	8	3	44	45
Beam	83	0	8	3	45	16
Beam	84	0	8	3	46	47
Beam	85	0	8	3	47	48
Beam	86	0	8	3	48	49
Beam	87	0	8	3	49	50
Beam	88	0	8	3	50	18
Beam	89	0	8	3	51	52
Beam	90	0	8	3	52	53
Beam	91	0	8	3	53	54
Beam	92	0	8	3	54	55
Beam	93	0	8	3	55	20
Beam	94	0	8	3	56	57
Beam	95	0	8	3	57	58
Beam	96	0	8	3	58	59
Beam	97	0	8	3	59	60
Beam	98	0	8	3	60	22
Beam	99	0	8	3	61	62
Beam	100	0	8	3	62	63
Beam	101	0	8	3	63	64
Beam	102	0	8	3	64	65
Beam	103	0	8	3	65	24
Beam	104	0	8	3	66	67
Beam	105	0	8	3	67	68
Beam	106	0	8	3	68	69
Beam	107	0	8	3	69	70
Beam	108	0	8	3	70	26
Beam	109	0	8	3	71	72
Beam	110	0	8	3	72	73
Beam	111	0	8	3	73	74

Beam	112	0	8	3	74	75
Beam	113	0	8	3	75	28
Beam	114	0	8	3	76	77
Beam	115	0	8	3	77	78
Beam	116	0	8	3	78	79
Beam	117	0	8	3	79	80
Beam	118	0	8	3	80	30
Beam	119	0	8	3	466	467
Beam	120	0	8	3	467	468
Beam	121	0	8	3	468	469
Beam	122	0	8	3	469	470
Beam	123	0	8	3	470	421
Beam	124	0	8	3	471	472
Beam	125	0	8	3	472	473
Beam	126	0	8	3	473	474
Beam	127	0	8	3	474	475
Beam	128	0	8	3	475	423
Beam	129	0	8	3	476	477
Beam	130	0	8	3	477	478
Beam	131	0	8	3	478	479
Beam	132	0	8	3	479	480
Beam	133	0	8	3	480	424
Beam	134	0	8	3	481	482
Beam	135	0	8	3	482	483
Beam	136	0	8	3	483	484
Beam	137	0	8	3	484	485
Beam	138	0	8	3	485	425
Beam	139	0	8	3	486	487
Beam	140	0	8	3	487	488
Beam	141	0	8	3	488	489
Beam	142	0	8	3	489	490
Beam	143	0	8	3	490	426
Beam	144	0	8	3	491	492
Beam	145	0	8	3	492	493
Beam	146	0	8	3	493	494
Beam	147	0	8	3	494	495
Beam	148	0	8	3	495	427
Beam	149	0	8	3	496	497
Beam	150	0	8	3	497	498
Beam	151	0	8	3	498	499
Beam	152	0	8	3	499	500
Beam	153	0	8	3	500	428
Beam	154	0	8	3	501	502
Beam	155	0	8	3	502	503
Beam	156	0	8	3	503	504
Beam	157	0	8	3	504	505
Beam	158	0	8	3	505	429
Beam	159	0	8	3	506	507
Beam	160	0	8	3	507	508
Beam	161	0	8	3	508	509
Beam	162	0	8	3	509	510
Beam	163	0	8	3	510	430
Beam	164	0	9	4	430	511
Beam	165	0	9	4	511	29

Beam	166	0	9	4	29	81
Beam	167	0	9	4	81	82
Beam	168	0	9	4	82	83
Beam	169	0	9	4	83	84
Beam	170	0	9	4	84	85
Beam	171	0	9	4	85	86
Beam	172	0	9	4	86	87
Beam	173	0	9	4	87	88
Beam	174	0	9	4	88	89
Beam	175	0	9	4	89	90
Beam	176	0	9	4	90	91
Beam	177	0	9	4	91	92
Beam	178	0	9	4	92	93
Beam	179	0	9	4	93	94
Beam	180	0	9	4	95	96
Beam	181	0	9	4	96	97
Beam	182	0	9	4	97	98
Beam	183	0	9	4	98	99
Beam	184	0	9	4	99	100
Beam	185	0	9	4	100	101
Beam	186	0	9	4	101	102
Beam	187	0	9	4	102	103
Beam	188	0	9	4	103	104
Beam	189	0	9	4	104	105
Beam	190	0	9	4	105	106
Beam	191	0	9	4	421	512
Beam	192	0	9	4	512	11
Beam	193	0	9	4	11	107
Beam	194	0	9	4	107	108
Beam	195	0	9	4	108	109
Beam	196	0	9	4	109	110
Beam	197	0	9	4	110	111
Beam	198	0	9	4	111	112
Beam	199	0	9	4	112	113
Beam	200	0	9	4	113	114
Beam	201	0	9	4	114	115
Beam	202	0	9	4	115	116
Beam	203	0	9	4	116	117
Beam	204	0	9	4	117	118
Beam	205	0	9	4	118	119
Beam	206	0	9	4	119	120
Beam	207	0	9	4	121	122
Beam	208	0	9	4	122	123
Beam	209	0	9	4	123	124
Beam	210	0	9	4	124	125
Beam	211	0	9	4	125	126
Beam	212	0	9	4	126	127
Beam	213	0	9	4	127	128
Beam	214	0	9	4	128	129
Beam	215	0	9	4	129	130
Beam	216	0	9	4	130	131
Beam	217	0	9	4	131	132
Beam	218	0	9	4	422	513
Beam	219	0	9	4	513	13

Beam	220	0	9	4	13	133
Beam	221	0	9	4	133	134
Beam	222	0	9	4	134	135
Beam	223	0	9	4	135	136
Beam	224	0	9	4	136	137
Beam	225	0	9	4	137	138
Beam	226	0	9	4	138	139
Beam	227	0	9	4	139	140
Beam	228	0	9	4	140	141
Beam	229	0	9	4	141	142
Beam	230	0	9	4	142	143
Beam	231	0	9	4	143	144
Beam	232	0	9	4	144	145
Beam	233	0	9	4	145	146
Beam	234	0	9	4	147	148
Beam	235	0	9	4	148	149
Beam	236	0	9	4	149	150
Beam	237	0	9	4	150	151
Beam	238	0	9	4	151	152
Beam	239	0	9	4	152	153
Beam	240	0	9	4	153	154
Beam	241	0	9	4	154	155
Beam	242	0	9	4	155	156
Beam	243	0	9	4	156	157
Beam	244	0	9	4	157	158
Beam	245	0	9	4	423	514
Beam	246	0	9	4	514	15
Beam	247	0	9	4	15	159
Beam	248	0	9	4	159	160
Beam	249	0	9	4	160	161
Beam	250	0	9	4	161	162
Beam	251	0	9	4	162	163
Beam	252	0	9	4	163	164
Beam	253	0	9	4	164	165
Beam	254	0	9	4	165	166
Beam	255	0	9	4	166	167
Beam	256	0	9	4	167	168
Beam	257	0	9	4	168	169
Beam	258	0	9	4	169	170
Beam	259	0	9	4	170	171
Beam	260	0	9	4	171	172
Beam	261	0	9	4	173	174
Beam	262	0	9	4	174	175
Beam	263	0	9	4	175	176
Beam	264	0	9	4	176	177
Beam	265	0	9	4	177	178
Beam	266	0	9	4	178	179
Beam	267	0	9	4	179	180
Beam	268	0	9	4	180	181
Beam	269	0	9	4	181	182
Beam	270	0	9	4	182	183
Beam	271	0	9	4	183	184
Beam	272	0	9	4	424	515
Beam	273	0	9	4	515	17

Beam	274	0	9	4	17	185
Beam	275	0	9	4	185	186
Beam	276	0	9	4	186	187
Beam	277	0	9	4	187	188
Beam	278	0	9	4	188	189
Beam	279	0	9	4	189	190
Beam	280	0	9	4	190	191
Beam	281	0	9	4	191	192
Beam	282	0	9	4	192	193
Beam	283	0	9	4	193	194
Beam	284	0	9	4	194	195
Beam	285	0	9	4	195	196
Beam	286	0	9	4	196	197
Beam	287	0	9	4	197	198
Beam	288	0	9	4	199	200
Beam	289	0	9	4	200	201
Beam	290	0	9	4	201	202
Beam	291	0	9	4	202	203
Beam	292	0	9	4	203	204
Beam	293	0	9	4	204	205
Beam	294	0	9	4	205	206
Beam	295	0	9	4	206	207
Beam	296	0	9	4	207	208
Beam	297	0	9	4	208	209
Beam	298	0	9	4	209	210
Beam	299	0	9	4	425	516
Beam	300	0	9	4	516	19
Beam	301	0	9	4	19	211
Beam	302	0	9	4	211	212
Beam	303	0	9	4	212	213
Beam	304	0	9	4	213	214
Beam	305	0	9	4	214	215
Beam	306	0	9	4	215	216
Beam	307	0	9	4	216	217
Beam	308	0	9	4	217	218
Beam	309	0	9	4	218	219
Beam	310	0	9	4	219	220
Beam	311	0	9	4	220	221
Beam	312	0	9	4	221	222
Beam	313	0	9	4	222	223
Beam	314	0	9	4	223	224
Beam	315	0	9	4	225	226
Beam	316	0	9	4	226	227
Beam	317	0	9	4	227	228
Beam	318	0	9	4	228	229
Beam	319	0	9	4	229	230
Beam	320	0	9	4	230	231
Beam	321	0	9	4	231	232
Beam	322	0	9	4	232	233
Beam	323	0	9	4	233	234
Beam	324	0	9	4	234	235
Beam	325	0	9	4	235	236
Beam	326	0	9	4	426	517
Beam	327	0	9	4	517	21

Beam	328	0	9	4	21	237
Beam	329	0	9	4	237	238
Beam	330	0	9	4	238	239
Beam	331	0	9	4	239	240
Beam	332	0	9	4	240	241
Beam	333	0	9	4	241	242
Beam	334	0	9	4	242	243
Beam	335	0	9	4	243	244
Beam	336	0	9	4	244	245
Beam	337	0	9	4	245	246
Beam	338	0	9	4	246	247
Beam	339	0	9	4	247	248
Beam	340	0	9	4	248	249
Beam	341	0	9	4	249	250
Beam	342	0	9	4	251	252
Beam	343	0	9	4	252	253
Beam	344	0	9	4	253	254
Beam	345	0	9	4	254	255
Beam	346	0	9	4	255	256
Beam	347	0	9	4	256	257
Beam	348	0	9	4	257	258
Beam	349	0	9	4	258	259
Beam	350	0	9	4	259	260
Beam	351	0	9	4	260	261
Beam	352	0	9	4	261	262
Beam	353	0	9	4	427	518
Beam	354	0	9	4	518	23
Beam	355	0	9	4	23	263
Beam	356	0	9	4	263	264
Beam	357	0	9	4	264	265
Beam	358	0	9	4	265	266
Beam	359	0	9	4	266	267
Beam	360	0	9	4	267	268
Beam	361	0	9	4	268	269
Beam	362	0	9	4	269	270
Beam	363	0	9	4	270	271
Beam	364	0	9	4	271	272
Beam	365	0	9	4	272	273
Beam	366	0	9	4	273	274
Beam	367	0	9	4	274	275
Beam	368	0	9	4	275	276
Beam	369	0	9	4	277	278
Beam	370	0	9	4	278	279
Beam	371	0	9	4	279	280
Beam	372	0	9	4	280	281
Beam	373	0	9	4	281	282
Beam	374	0	9	4	282	283
Beam	375	0	9	4	283	284
Beam	376	0	9	4	284	285
Beam	377	0	9	4	285	286
Beam	378	0	9	4	286	287
Beam	379	0	9	4	287	288
Beam	380	0	9	4	428	519
Beam	381	0	9	4	519	25

Beam	382	0	9	4	25	289
Beam	383	0	9	4	289	290
Beam	384	0	9	4	290	291
Beam	385	0	9	4	291	292
Beam	386	0	9	4	292	293
Beam	387	0	9	4	293	294
Beam	388	0	9	4	294	295
Beam	389	0	9	4	295	296
Beam	390	0	9	4	296	297
Beam	391	0	9	4	297	298
Beam	392	0	9	4	298	299
Beam	393	0	9	4	299	300
Beam	394	0	9	4	300	301
Beam	395	0	9	4	301	302
Beam	396	0	9	4	303	304
Beam	397	0	9	4	304	305
Beam	398	0	9	4	305	306
Beam	399	0	9	4	306	307
Beam	400	0	9	4	307	308
Beam	401	0	9	4	308	309
Beam	402	0	9	4	309	310
Beam	403	0	9	4	310	311
Beam	404	0	9	4	311	312
Beam	405	0	9	4	312	313
Beam	406	0	9	4	313	314
Beam	407	0	9	4	429	520
Beam	408	0	9	4	520	27
Beam	409	0	9	4	27	315
Beam	410	0	9	4	315	316
Beam	411	0	9	4	316	317
Beam	412	0	9	4	317	318
Beam	413	0	9	4	318	319
Beam	414	0	9	4	319	320
Beam	415	0	9	4	320	321
Beam	416	0	9	4	321	322
Beam	417	0	9	4	322	323
Beam	418	0	9	4	323	324
Beam	419	0	9	4	324	325
Beam	420	0	9	4	325	326
Beam	421	0	9	4	326	327
Beam	422	0	9	4	327	328
Beam	423	0	9	4	329	330
Beam	424	0	9	4	330	331
Beam	425	0	9	4	331	332
Beam	426	0	9	4	332	333
Beam	427	0	9	4	333	334
Beam	428	0	9	4	334	335
Beam	429	0	9	4	335	336
Beam	430	0	9	4	336	337
Beam	431	0	9	4	337	338
Beam	432	0	9	4	338	339
Beam	433	0	9	4	339	340
Beam	434	0	8	3	521	522
Beam	435	0	8	3	522	523

Beam	436	0	8	3	523	524
Beam	437	0	8	3	524	525
Beam	438	0	8	3	525	422
Beam	439	0	10	5	430	526
Beam	440	0	10	5	526	527
Beam	441	0	10	5	527	528
Beam	442	0	10	5	528	529
Beam	443	0	10	5	529	431
Beam	444	0	10	5	28	341
Beam	445	0	10	5	341	342
Beam	446	0	10	5	342	343
Beam	447	0	10	5	343	344
Beam	448	0	10	5	344	345
Beam	449	0	6	1	602	603
Beam	450	0	6	1	605	606
Beam	451	0	6	1	613	614
Beam	452	0	6	1	614	615
Beam	453	0	6	1	620	621
Beam	454	0	6	1	626	627
Beam	455	0	6	1	632	633
Beam	456	0	6	1	638	639
Beam	457	0	6	1	644	645
Beam	458	0	6	1	650	651
Beam	459	0	6	1	656	657
Beam	460	0	6	1	657	658
Beam	461	0	6	1	643	644
Beam	462	0	6	1	651	652
Beam	463	0	6	1	652	653
Beam	464	0	6	1	653	654
Beam	465	0	6	1	654	655
Beam	466	0	6	1	655	656
Beam	467	0	6	1	645	646
Beam	468	0	6	1	646	647
Beam	469	0	6	1	647	648
Beam	470	0	6	1	648	649
Beam	471	0	6	1	649	650
Beam	472	0	6	1	603	604
Beam	473	0	6	1	604	609
Beam	474	0	6	1	609	608
Beam	475	0	6	1	608	607
Beam	476	0	6	1	607	605
Beam	477	0	6	1	615	616
Beam	478	0	6	1	616	617
Beam	479	0	6	1	617	618
Beam	480	0	6	1	618	619
Beam	481	0	6	1	619	620
Beam	482	0	6	1	621	622
Beam	483	0	6	1	622	623
Beam	484	0	6	1	623	624
Beam	485	0	6	1	624	625
Beam	486	0	6	1	625	626
Beam	487	0	6	1	627	628
Beam	488	0	6	1	628	629
Beam	489	0	6	1	629	630

Beam	490	0	6	1	630	631
Beam	491	0	6	1	631	632
Beam	492	0	6	1	633	634
Beam	493	0	6	1	634	635
Beam	494	0	6	1	635	636
Beam	495	0	6	1	636	637
Beam	496	0	6	1	637	638
Beam	497	0	6	1	639	640
Beam	498	0	6	1	640	641
Beam	499	0	6	1	606	610
Beam	500	0	6	1	610	611
Beam	501	0	6	1	611	612
Beam	502	0	6	1	612	613
Beam	503	0	3	1	1	346
Beam	504	0	3	1	2	347
Beam	505	0	3	1	349	348
Beam	506	0	3	1	3	349
Beam	507	0	3	1	4	350
Beam	508	0	3	1	5	351
Beam	509	0	3	1	6	352
Beam	510	0	3	1	7	353
Beam	511	0	3	1	355	354
Beam	512	0	3	1	8	356
Beam	513	0	3	1	9	357
Beam	514	0	3	1	10	358
Beam	515	0	3	1	359	10
Beam	516	0	3	1	356	355
Beam	517	0	3	1	360	9
Beam	518	0	3	1	361	360
Beam	519	0	3	1	362	361
Beam	520	0	3	1	363	362
Beam	521	0	3	1	358	363
Beam	522	0	3	1	364	8
Beam	523	0	3	1	365	364
Beam	524	0	3	1	366	365
Beam	525	0	3	1	367	366
Beam	526	0	3	1	357	367
Beam	527	0	3	1	368	1
Beam	528	0	3	1	369	368
Beam	529	0	3	1	370	369
Beam	530	0	3	1	371	370
Beam	531	0	3	1	347	371
Beam	532	0	3	1	372	3
Beam	533	0	3	1	373	372
Beam	534	0	3	1	374	373
Beam	535	0	3	1	375	374
Beam	536	0	3	1	350	375
Beam	537	0	3	1	376	4
Beam	538	0	3	1	377	376
Beam	539	0	3	1	378	377
Beam	540	0	3	1	379	378
Beam	541	0	3	1	351	379
Beam	542	0	3	1	380	5
Beam	543	0	3	1	381	380

Beam	544	0	3	1	382	381
Beam	545	0	3	1	383	382
Beam	546	0	3	1	352	383
Beam	547	0	3	1	384	6
Beam	548	0	3	1	385	384
Beam	549	0	3	1	386	385
Beam	550	0	3	1	387	386
Beam	551	0	3	1	353	387
Beam	552	0	3	1	388	7
Beam	553	0	3	1	389	388
Beam	554	0	3	1	354	389
Beam	555	0	3	1	390	2
Beam	556	0	3	1	391	390
Beam	557	0	3	1	392	391
Beam	558	0	3	1	348	392
Beam	559	0	4	1	545	546
Beam	560	0	4	1	547	548
Beam	561	0	4	1	549	550
Beam	562	0	4	1	551	549
Beam	563	0	4	1	552	553
Beam	564	0	4	1	554	555
Beam	565	0	4	1	556	557
Beam	566	0	4	1	558	559
Beam	567	0	4	1	560	561
Beam	568	0	4	1	562	563
Beam	569	0	4	1	564	565
Beam	570	0	4	1	566	567
Beam	571	0	4	1	568	566
Beam	572	0	4	1	563	560
Beam	573	0	4	1	569	564
Beam	574	0	4	1	570	569
Beam	575	0	4	1	571	570
Beam	576	0	4	1	572	571
Beam	577	0	4	1	567	572
Beam	578	0	4	1	573	562
Beam	579	0	4	1	574	573
Beam	580	0	4	1	575	574
Beam	581	0	4	1	576	575
Beam	582	0	4	1	565	576
Beam	583	0	4	1	577	545
Beam	584	0	4	1	578	577
Beam	585	0	4	1	579	578
Beam	586	0	4	1	580	579
Beam	587	0	4	1	548	580
Beam	588	0	4	1	581	551
Beam	589	0	4	1	582	581
Beam	590	0	4	1	583	582
Beam	591	0	4	1	584	583
Beam	592	0	4	1	553	584
Beam	593	0	4	1	585	552
Beam	594	0	4	1	586	585
Beam	595	0	4	1	587	586
Beam	596	0	4	1	588	587
Beam	597	0	4	1	555	588

Beam	598	0	4	1	589	554
Beam	599	0	4	1	590	589
Beam	600	0	4	1	591	590
Beam	601	0	4	1	592	591
Beam	602	0	4	1	557	592
Beam	603	0	4	1	593	556
Beam	604	0	4	1	594	593
Beam	605	0	4	1	595	594
Beam	606	0	4	1	596	595
Beam	607	0	4	1	559	596
Beam	608	0	4	1	597	558
Beam	609	0	4	1	598	597
Beam	610	0	4	1	561	598
Beam	611	0	4	1	599	547
Beam	612	0	4	1	600	599
Beam	613	0	4	1	601	600
Beam	614	0	4	1	550	601
Beam	615	0	7	2	420	657
Beam	616	0	7	2	566	10
Beam	617	0	7	2	418	651
Beam	618	0	7	2	416	645
Beam	619	0	7	2	412	639
Beam	620	0	7	2	410	633
Beam	621	0	7	2	408	627
Beam	622	0	7	2	406	621
Beam	623	0	7	2	404	615
Beam	624	0	7	2	401	606
Beam	625	0	7	2	399	603
Beam	626	0	7	2	564	9
Beam	627	0	7	2	562	8
Beam	628	0	7	2	558	7
Beam	629	0	7	2	556	6
Beam	630	0	7	2	554	5
Beam	631	0	7	2	552	4
Beam	632	0	7	2	551	3
Beam	633	0	7	2	547	2
Beam	634	0	7	2	545	1
Beam	635	0	6	1	642	643
Beam	636	0	6	1	641	642
Beam	637	0	10	5	530	318
Beam	638	0	10	5	84	531
Beam	639	0	10	5	531	532
Beam	640	0	10	5	532	533
Beam	641	0	10	5	533	534
Beam	642	0	10	5	534	530
Beam	643	0	10	5	393	101
Beam	644	0	10	5	335	394
Beam	645	0	10	5	394	395
Beam	646	0	10	5	395	396
Beam	647	0	10	5	396	397
Beam	648	0	10	5	397	393
Beam	649	0	9	4	535	95
Beam	650	0	9	4	94	535
Beam	651	0	9	4	536	121

Beam	652	0	9	4	120	536
Beam	653	0	9	4	537	147
Beam	654	0	9	4	146	537
Beam	655	0	9	4	538	173
Beam	656	0	9	4	172	538
Beam	657	0	9	4	539	199
Beam	658	0	9	4	198	539
Beam	659	0	9	4	540	225
Beam	660	0	9	4	224	540
Beam	661	0	9	4	541	251
Beam	662	0	9	4	250	541
Beam	663	0	9	4	542	277
Beam	664	0	9	4	276	542
Beam	665	0	9	4	543	303
Beam	666	0	9	4	302	543
Beam	667	0	9	4	544	329
Beam	668	0	9	4	328	544
Beam	669	0	10	5	659	428
Beam	670	0	10	5	660	427
Beam	671	0	10	5	661	426
Beam	672	0	10	5	662	425
Beam	673	0	10	5	663	424
Beam	674	0	10	5	664	423
Beam	675	0	10	5	665	422
Beam	676	0	10	5	666	421
Beam	677	0	10	5	667	28
Beam	678	0	10	5	668	26
Beam	679	0	10	5	669	24
Beam	680	0	10	5	670	22
Beam	681	0	10	5	671	20
Beam	682	0	10	5	672	18
Beam	683	0	10	5	673	16
Beam	684	0	10	5	674	14
Beam	685	0	10	5	429	675
Beam	686	0	10	5	428	676
Beam	687	0	10	5	427	677
Beam	688	0	10	5	426	678
Beam	689	0	10	5	425	679
Beam	690	0	10	5	424	680
Beam	691	0	10	5	423	681
Beam	692	0	10	5	422	682
Beam	693	0	10	5	675	683
Beam	694	0	10	5	676	684
Beam	695	0	10	5	677	685
Beam	696	0	10	5	678	686
Beam	697	0	10	5	679	687
Beam	698	0	10	5	680	688
Beam	699	0	10	5	681	689
Beam	700	0	10	5	682	690
Beam	701	0	10	5	683	691
Beam	702	0	10	5	684	692
Beam	703	0	10	5	685	693
Beam	704	0	10	5	686	694
Beam	705	0	10	5	687	695

Beam	706	0	10	5	688	696
Beam	707	0	10	5	689	697
Beam	708	0	10	5	690	698
Beam	709	0	10	5	691	699
Beam	710	0	10	5	692	700
Beam	711	0	10	5	693	701
Beam	712	0	10	5	694	702
Beam	713	0	10	5	695	703
Beam	714	0	10	5	696	704
Beam	715	0	10	5	697	705
Beam	716	0	10	5	698	706
Beam	717	0	10	5	699	659
Beam	718	0	10	5	700	660
Beam	719	0	10	5	701	661
Beam	720	0	10	5	702	662
Beam	721	0	10	5	703	663
Beam	722	0	10	5	704	664
Beam	723	0	10	5	705	665
Beam	724	0	10	5	706	666
Beam	725	0	10	5	26	707
Beam	726	0	10	5	24	708
Beam	727	0	10	5	22	709
Beam	728	0	10	5	20	710
Beam	729	0	10	5	18	711
Beam	730	0	10	5	16	712
Beam	731	0	10	5	14	713
Beam	732	0	10	5	12	714
Beam	733	0	10	5	707	715
Beam	734	0	10	5	708	716
Beam	735	0	10	5	709	717
Beam	736	0	10	5	710	718
Beam	737	0	10	5	711	719
Beam	738	0	10	5	712	720
Beam	739	0	10	5	713	721
Beam	740	0	10	5	714	722
Beam	741	0	10	5	715	723
Beam	742	0	10	5	716	724
Beam	743	0	10	5	717	725
Beam	744	0	10	5	718	726
Beam	745	0	10	5	719	727
Beam	746	0	10	5	720	728
Beam	747	0	10	5	721	729
Beam	748	0	10	5	722	730
Beam	749	0	10	5	723	731
Beam	750	0	10	5	724	732
Beam	751	0	10	5	725	733
Beam	752	0	10	5	726	734
Beam	753	0	10	5	727	735
Beam	754	0	10	5	728	736
Beam	755	0	10	5	729	737
Beam	756	0	10	5	730	738
Beam	757	0	10	5	731	667
Beam	758	0	10	5	732	668
Beam	759	0	10	5	733	669

Beam	760	0	10	5	734	670
Beam	761	0	10	5	735	671
Beam	762	0	10	5	736	672
Beam	763	0	10	5	737	673
Beam	764	0	10	5	738	674
Beam	765	0	10	5	739	292
Beam	766	0	10	5	740	266
Beam	767	0	10	5	741	240
Beam	768	0	10	5	742	214
Beam	769	0	10	5	743	188
Beam	770	0	10	5	744	162
Beam	771	0	10	5	745	136
Beam	772	0	10	5	746	110
Beam	773	0	10	5	318	747
Beam	774	0	10	5	292	748
Beam	775	0	10	5	266	749
Beam	776	0	10	5	240	750
Beam	777	0	10	5	214	751
Beam	778	0	10	5	188	752
Beam	779	0	10	5	162	753
Beam	780	0	10	5	136	754
Beam	781	0	10	5	747	755
Beam	782	0	10	5	748	756
Beam	783	0	10	5	749	757
Beam	784	0	10	5	750	758
Beam	785	0	10	5	751	759
Beam	786	0	10	5	752	760
Beam	787	0	10	5	753	761
Beam	788	0	10	5	754	762
Beam	789	0	10	5	755	763
Beam	790	0	10	5	756	764
Beam	791	0	10	5	757	765
Beam	792	0	10	5	758	766
Beam	793	0	10	5	759	767
Beam	794	0	10	5	760	768
Beam	795	0	10	5	761	769
Beam	796	0	10	5	762	770
Beam	797	0	10	5	763	771
Beam	798	0	10	5	764	772
Beam	799	0	10	5	765	773
Beam	800	0	10	5	766	774
Beam	801	0	10	5	767	775
Beam	802	0	10	5	768	776
Beam	803	0	10	5	769	777
Beam	804	0	10	5	770	778
Beam	805	0	10	5	771	739
Beam	806	0	10	5	772	740
Beam	807	0	10	5	773	741
Beam	808	0	10	5	774	742
Beam	809	0	10	5	775	743
Beam	810	0	10	5	776	744
Beam	811	0	10	5	777	745
Beam	812	0	10	5	778	746
Beam	813	0	10	5	779	335

Beam	814	0	10	5	780	309
Beam	815	0	10	5	781	283
Beam	816	0	10	5	782	257
Beam	817	0	10	5	783	231
Beam	818	0	10	5	784	205
Beam	819	0	10	5	785	179
Beam	820	0	10	5	786	153
Beam	821	0	10	5	309	787
Beam	822	0	10	5	283	788
Beam	823	0	10	5	257	789
Beam	824	0	10	5	231	790
Beam	825	0	10	5	205	791
Beam	826	0	10	5	179	792
Beam	827	0	10	5	153	793
Beam	828	0	10	5	127	794
Beam	829	0	10	5	787	795
Beam	830	0	10	5	788	796
Beam	831	0	10	5	789	797
Beam	832	0	10	5	790	798
Beam	833	0	10	5	791	799
Beam	834	0	10	5	792	800
Beam	835	0	10	5	793	801
Beam	836	0	10	5	794	802
Beam	837	0	10	5	795	803
Beam	838	0	10	5	796	804
Beam	839	0	10	5	797	805
Beam	840	0	10	5	798	806
Beam	841	0	10	5	799	807
Beam	842	0	10	5	800	808
Beam	843	0	10	5	801	809
Beam	844	0	10	5	802	810
Beam	845	0	10	5	803	811
Beam	846	0	10	5	804	812
Beam	847	0	10	5	805	813
Beam	848	0	10	5	806	814
Beam	849	0	10	5	807	815
Beam	850	0	10	5	808	816
Beam	851	0	10	5	809	817
Beam	852	0	10	5	810	818
Beam	853	0	10	5	811	779
Beam	854	0	10	5	812	780
Beam	855	0	10	5	813	781
Beam	856	0	10	5	814	782
Beam	857	0	10	5	815	783
Beam	858	0	10	5	816	784
Beam	859	0	10	5	817	785
Beam	860	0	10	5	818	786
Beam	861	0	17	9	430	318
Beam	862	0	17	9	84	429
Beam	863	0	17	9	101	28
Beam	864	0	17	9	30	335
Beam	865	0	17	9	429	292
Beam	866	0	17	9	428	266
Beam	867	0	17	9	427	240

```
   Beam                    868       0      17       9     426     214
   Beam                    869       0      17       9     425     188
   Beam                    870       0      17       9     424     162
   Beam                    871       0      17       9     423     136
   Beam                    872       0      17       9     422     110
   Beam                    873       0      17       9     318     428
   Beam                    874       0      17       9     292     427
   Beam                    875       0      17       9     266     426
   Beam                    876       0      17       9     240     425
   Beam                    877       0      17       9     214     424
   Beam                    878       0      17       9     188     423
   Beam                    879       0      17       9     162     422
   Beam                    880       0      17       9     136     421
   Beam                    881       0      17       9     335      26
   Beam                    882       0      17       9     309      24
   Beam                    883       0      17       9     283      22
   Beam                    884       0      17       9     257      20
   Beam                    885       0      17       9     231      18
   Beam                    886       0      17       9     205      16
   Beam                    887       0      17       9     179      14
   Beam                    888       0      17       9     153      12
   Beam                    889       0      17       9      28     309
   Beam                    890       0      17       9      26     283
   Beam                    891       0      17       9      24     257
   Beam                    892       0      17       9      22     231
   Beam                    893       0      17       9      20     205
   Beam                    894       0      17       9      18     179
   Beam                    895       0      17       9      16     153
   Beam                    896       0      17       9      14     127
   Beam                    897       0      20      10    1047    1055
   Beam                    898       0      20      10    1048    1056
   Beam                    899       0      20      10    1049    1057
   Beam                    900       0      20      10    1050    1058
   Beam                    901       0      20      10    1051    1059
   Beam                    902       0      20      10    1052    1060
   Beam                    903       0      20      10    1053    1061
   Beam                    904       0      20      10    1054    1062
   Beam                    905       0      23      11    1063    1067
   Beam                    906       0      24      11    1064    1068
   Beam                    907       0      25      11    1065    1069
   Beam                    908       0      26      11    1066    1070

/ ____________________________________________________________________________
/ BEAM ANGLES

   BmAngle                   1     9.00000000000000E+1
   BmAngle                   2     9.00000000000000E+1
   BmAngle                   3     9.00000000000000E+1
   BmAngle                   4     9.00000000000000E+1
   BmAngle                   5     9.00000000000000E+1
   BmAngle                   6     9.00000000000000E+1
   BmAngle                   7     9.00000000000000E+1
   BmAngle                   8     9.00000000000000E+1
   BmAngle                   9     9.00000000000000E+1
```

BmAngle	10	9.00000000000000E+1
BmAngle	11	9.00000000000000E+1
BmAngle	12	9.00000000000000E+1
BmAngle	13	9.00000000000000E+1
BmAngle	14	9.00000000000000E+1
BmAngle	15	9.00000000000000E+1
BmAngle	16	9.00000000000000E+1
BmAngle	17	9.00000000000000E+1
BmAngle	18	9.00000000000000E+1
BmAngle	19	9.00000000000000E+1
BmAngle	20	9.00000000000000E+1
BmAngle	21	9.00000000000000E+1
BmAngle	22	9.00000000000000E+1
BmAngle	23	9.00000000000000E+1
BmAngle	24	9.00000000000000E+1
BmAngle	25	9.00000000000000E+1
BmAngle	26	9.00000000000000E+1
BmAngle	27	9.00000000000000E+1
BmAngle	28	9.00000000000000E+1
BmAngle	29	9.00000000000000E+1
BmAngle	30	9.00000000000000E+1
BmAngle	31	9.00000000000000E+1
BmAngle	32	9.00000000000000E+1
BmAngle	33	9.00000000000000E+1
BmAngle	34	9.00000000000000E+1
BmAngle	35	9.00000000000000E+1
BmAngle	36	9.00000000000000E+1
BmAngle	37	9.00000000000000E+1
BmAngle	38	9.00000000000000E+1
BmAngle	39	9.00000000000000E+1
BmAngle	40	9.00000000000000E+1
BmAngle	41	9.00000000000000E+1
BmAngle	42	9.00000000000000E+1
BmAngle	43	9.00000000000000E+1
BmAngle	44	9.00000000000000E+1
BmAngle	45	9.00000000000000E+1
BmAngle	46	9.00000000000000E+1
BmAngle	47	9.00000000000000E+1
BmAngle	48	9.00000000000000E+1
BmAngle	49	9.00000000000000E+1
BmAngle	50	9.00000000000000E+1
BmAngle	51	9.00000000000000E+1
BmAngle	52	9.00000000000000E+1
BmAngle	53	9.00000000000000E+1
BmAngle	54	9.00000000000000E+1
BmAngle	55	9.00000000000000E+1
BmAngle	56	9.00000000000000E+1
BmAngle	57	9.00000000000000E+1
BmAngle	58	9.00000000000000E+1
BmAngle	59	9.00000000000000E+1
BmAngle	60	9.00000000000000E+1
BmAngle	61	9.00000000000000E+1
BmAngle	62	9.00000000000000E+1
BmAngle	63	9.00000000000000E+1

BmAngle	64	9.00000000000000E+1
BmAngle	65	9.00000000000000E+1
BmAngle	66	9.00000000000000E+1
BmAngle	67	9.00000000000000E+1
BmAngle	68	9.00000000000000E+1
BmAngle	164	9.00000000000000E+1
BmAngle	165	9.00000000000000E+1
BmAngle	166	9.00000000000000E+1
BmAngle	167	9.00000000000000E+1
BmAngle	168	9.00000000000000E+1
BmAngle	169	9.00000000000000E+1
BmAngle	170	9.00000000000000E+1
BmAngle	171	9.00000000000000E+1
BmAngle	172	9.00000000000000E+1
BmAngle	173	9.00000000000000E+1
BmAngle	174	9.00000000000000E+1
BmAngle	175	9.00000000000000E+1
BmAngle	176	9.00000000000000E+1
BmAngle	177	9.00000000000000E+1
BmAngle	178	9.00000000000000E+1
BmAngle	179	9.00000000000000E+1
BmAngle	180	9.00000000000000E+1
BmAngle	181	9.00000000000000E+1
BmAngle	182	9.00000000000000E+1
BmAngle	183	9.00000000000000E+1
BmAngle	184	9.00000000000000E+1
BmAngle	185	9.00000000000000E+1
BmAngle	186	9.00000000000000E+1
BmAngle	187	9.00000000000000E+1
BmAngle	188	9.00000000000000E+1
BmAngle	189	9.00000000000000E+1
BmAngle	190	9.00000000000000E+1
BmAngle	191	9.00000000000000E+1
BmAngle	192	9.00000000000000E+1
BmAngle	193	9.00000000000000E+1
BmAngle	194	9.00000000000000E+1
BmAngle	195	9.00000000000000E+1
BmAngle	196	9.00000000000000E+1
BmAngle	197	9.00000000000000E+1
BmAngle	198	9.00000000000000E+1
BmAngle	199	9.00000000000000E+1
BmAngle	200	9.00000000000000E+1
BmAngle	201	9.00000000000000E+1
BmAngle	202	9.00000000000000E+1
BmAngle	203	9.00000000000000E+1
BmAngle	204	9.00000000000000E+1
BmAngle	205	9.00000000000000E+1
BmAngle	206	9.00000000000000E+1
BmAngle	207	9.00000000000000E+1
BmAngle	208	9.00000000000000E+1
BmAngle	209	9.00000000000000E+1
BmAngle	210	9.00000000000000E+1
BmAngle	211	9.00000000000000E+1
BmAngle	212	9.00000000000000E+1

BmAngle	213	9.00000000000000E+1
BmAngle	214	9.00000000000000E+1
BmAngle	215	9.00000000000000E+1
BmAngle	216	9.00000000000000E+1
BmAngle	217	9.00000000000000E+1
BmAngle	218	9.00000000000000E+1
BmAngle	219	9.00000000000000E+1
BmAngle	220	9.00000000000000E+1
BmAngle	221	9.00000000000000E+1
BmAngle	222	9.00000000000000E+1
BmAngle	223	9.00000000000000E+1
BmAngle	224	9.00000000000000E+1
BmAngle	225	9.00000000000000E+1
BmAngle	226	9.00000000000000E+1
BmAngle	227	9.00000000000000E+1
BmAngle	228	9.00000000000000E+1
BmAngle	229	9.00000000000000E+1
BmAngle	230	9.00000000000000E+1
BmAngle	231	9.00000000000000E+1
BmAngle	232	9.00000000000000E+1
BmAngle	233	9.00000000000000E+1
BmAngle	234	9.00000000000000E+1
BmAngle	235	9.00000000000000E+1
BmAngle	236	9.00000000000000E+1
BmAngle	237	9.00000000000000E+1
BmAngle	238	9.00000000000000E+1
BmAngle	239	9.00000000000000E+1
BmAngle	240	9.00000000000000E+1
BmAngle	241	9.00000000000000E+1
BmAngle	242	9.00000000000000E+1
BmAngle	243	9.00000000000000E+1
BmAngle	244	9.00000000000000E+1
BmAngle	245	9.00000000000000E+1
BmAngle	246	9.00000000000000E+1
BmAngle	247	9.00000000000000E+1
BmAngle	248	9.00000000000000E+1
BmAngle	249	9.00000000000000E+1
BmAngle	250	9.00000000000000E+1
BmAngle	251	9.00000000000000E+1
BmAngle	252	9.00000000000000E+1
BmAngle	253	9.00000000000000E+1
BmAngle	254	9.00000000000000E+1
BmAngle	255	9.00000000000000E+1
BmAngle	256	9.00000000000000E+1
BmAngle	257	9.00000000000000E+1
BmAngle	258	9.00000000000000E+1
BmAngle	259	9.00000000000000E+1
BmAngle	260	9.00000000000000E+1
BmAngle	261	9.00000000000000E+1
BmAngle	262	9.00000000000000E+1
BmAngle	263	9.00000000000000E+1
BmAngle	264	9.00000000000000E+1
BmAngle	265	9.00000000000000E+1
BmAngle	266	9.00000000000000E+1

BmAngle	267	9.00000000000000E+1
BmAngle	268	9.00000000000000E+1
BmAngle	269	9.00000000000000E+1
BmAngle	270	9.00000000000000E+1
BmAngle	271	9.00000000000000E+1
BmAngle	272	9.00000000000000E+1
BmAngle	273	9.00000000000000E+1
BmAngle	274	9.00000000000000E+1
BmAngle	275	9.00000000000000E+1
BmAngle	276	9.00000000000000E+1
BmAngle	277	9.00000000000000E+1
BmAngle	278	9.00000000000000E+1
BmAngle	279	9.00000000000000E+1
BmAngle	280	9.00000000000000E+1
BmAngle	281	9.00000000000000E+1
BmAngle	282	9.00000000000000E+1
BmAngle	283	9.00000000000000E+1
BmAngle	284	9.00000000000000E+1
BmAngle	285	9.00000000000000E+1
BmAngle	286	9.00000000000000E+1
BmAngle	287	9.00000000000000E+1
BmAngle	288	9.00000000000000E+1
BmAngle	289	9.00000000000000E+1
BmAngle	290	9.00000000000000E+1
BmAngle	291	9.00000000000000E+1
BmAngle	292	9.00000000000000E+1
BmAngle	293	9.00000000000000E+1
BmAngle	294	9.00000000000000E+1
BmAngle	295	9.00000000000000E+1
BmAngle	296	9.00000000000000E+1
BmAngle	297	9.00000000000000E+1
BmAngle	298	9.00000000000000E+1
BmAngle	299	9.00000000000000E+1
BmAngle	300	9.00000000000000E+1
BmAngle	301	9.00000000000000E+1
BmAngle	302	9.00000000000000E+1
BmAngle	303	9.00000000000000E+1
BmAngle	304	9.00000000000000E+1
BmAngle	305	9.00000000000000E+1
BmAngle	306	9.00000000000000E+1
BmAngle	307	9.00000000000000E+1
BmAngle	308	9.00000000000000E+1
BmAngle	309	9.00000000000000E+1
BmAngle	310	9.00000000000000E+1
BmAngle	311	9.00000000000000E+1
BmAngle	312	9.00000000000000E+1
BmAngle	313	9.00000000000000E+1
BmAngle	314	9.00000000000000E+1
BmAngle	315	9.00000000000000E+1
BmAngle	316	9.00000000000000E+1
BmAngle	317	9.00000000000000E+1
BmAngle	318	9.00000000000000E+1
BmAngle	319	9.00000000000000E+1
BmAngle	320	9.00000000000000E+1

BmAngle	321	9.00000000000000E+1
BmAngle	322	9.00000000000000E+1
BmAngle	323	9.00000000000000E+1
BmAngle	324	9.00000000000000E+1
BmAngle	325	9.00000000000000E+1
BmAngle	326	9.00000000000000E+1
BmAngle	327	9.00000000000000E+1
BmAngle	328	9.00000000000000E+1
BmAngle	329	9.00000000000000E+1
BmAngle	330	9.00000000000000E+1
BmAngle	331	9.00000000000000E+1
BmAngle	332	9.00000000000000E+1
BmAngle	333	9.00000000000000E+1
BmAngle	334	9.00000000000000E+1
BmAngle	335	9.00000000000000E+1
BmAngle	336	9.00000000000000E+1
BmAngle	337	9.00000000000000E+1
BmAngle	338	9.00000000000000E+1
BmAngle	339	9.00000000000000E+1
BmAngle	340	9.00000000000000E+1
BmAngle	341	9.00000000000000E+1
BmAngle	342	9.00000000000000E+1
BmAngle	343	9.00000000000000E+1
BmAngle	344	9.00000000000000E+1
BmAngle	345	9.00000000000000E+1
BmAngle	346	9.00000000000000E+1
BmAngle	347	9.00000000000000E+1
BmAngle	348	9.00000000000000E+1
BmAngle	349	9.00000000000000E+1
BmAngle	350	9.00000000000000E+1
BmAngle	351	9.00000000000000E+1
BmAngle	352	9.00000000000000E+1
BmAngle	353	9.00000000000000E+1
BmAngle	354	9.00000000000000E+1
BmAngle	355	9.00000000000000E+1
BmAngle	356	9.00000000000000E+1
BmAngle	357	9.00000000000000E+1
BmAngle	358	9.00000000000000E+1
BmAngle	359	9.00000000000000E+1
BmAngle	360	9.00000000000000E+1
BmAngle	361	9.00000000000000E+1
BmAngle	362	9.00000000000000E+1
BmAngle	363	9.00000000000000E+1
BmAngle	364	9.00000000000000E+1
BmAngle	365	9.00000000000000E+1
BmAngle	366	9.00000000000000E+1
BmAngle	367	9.00000000000000E+1
BmAngle	368	9.00000000000000E+1
BmAngle	369	9.00000000000000E+1
BmAngle	370	9.00000000000000E+1
BmAngle	371	9.00000000000000E+1
BmAngle	372	9.00000000000000E+1
BmAngle	373	9.00000000000000E+1
BmAngle	374	9.00000000000000E+1

BmAngle	375	9.00000000000000E+1
BmAngle	376	9.00000000000000E+1
BmAngle	377	9.00000000000000E+1
BmAngle	378	9.00000000000000E+1
BmAngle	379	9.00000000000000E+1
BmAngle	380	9.00000000000000E+1
BmAngle	381	9.00000000000000E+1
BmAngle	382	9.00000000000000E+1
BmAngle	383	9.00000000000000E+1
BmAngle	384	9.00000000000000E+1
BmAngle	385	9.00000000000000E+1
BmAngle	386	9.00000000000000E+1
BmAngle	387	9.00000000000000E+1
BmAngle	388	9.00000000000000E+1
BmAngle	389	9.00000000000000E+1
BmAngle	390	9.00000000000000E+1
BmAngle	391	9.00000000000000E+1
BmAngle	392	9.00000000000000E+1
BmAngle	393	9.00000000000000E+1
BmAngle	394	9.00000000000000E+1
BmAngle	395	9.00000000000000E+1
BmAngle	396	9.00000000000000E+1
BmAngle	397	9.00000000000000E+1
BmAngle	398	9.00000000000000E+1
BmAngle	399	9.00000000000000E+1
BmAngle	400	9.00000000000000E+1
BmAngle	401	9.00000000000000E+1
BmAngle	402	9.00000000000000E+1
BmAngle	403	9.00000000000000E+1
BmAngle	404	9.00000000000000E+1
BmAngle	405	9.00000000000000E+1
BmAngle	406	9.00000000000000E+1
BmAngle	407	9.00000000000000E+1
BmAngle	408	9.00000000000000E+1
BmAngle	409	9.00000000000000E+1
BmAngle	410	9.00000000000000E+1
BmAngle	411	9.00000000000000E+1
BmAngle	412	9.00000000000000E+1
BmAngle	413	9.00000000000000E+1
BmAngle	414	9.00000000000000E+1
BmAngle	415	9.00000000000000E+1
BmAngle	416	9.00000000000000E+1
BmAngle	417	9.00000000000000E+1
BmAngle	418	9.00000000000000E+1
BmAngle	419	9.00000000000000E+1
BmAngle	420	9.00000000000000E+1
BmAngle	421	9.00000000000000E+1
BmAngle	422	9.00000000000000E+1
BmAngle	423	9.00000000000000E+1
BmAngle	424	9.00000000000000E+1
BmAngle	425	9.00000000000000E+1
BmAngle	426	9.00000000000000E+1
BmAngle	427	9.00000000000000E+1
BmAngle	428	9.00000000000000E+1

BmAngle	429	9.00000000000000E+1
BmAngle	430	9.00000000000000E+1
BmAngle	431	9.00000000000000E+1
BmAngle	432	9.00000000000000E+1
BmAngle	433	9.00000000000000E+1
BmAngle	439	9.00000000000000E+1
BmAngle	440	9.00000000000000E+1
BmAngle	441	9.00000000000000E+1
BmAngle	442	9.00000000000000E+1
BmAngle	443	9.00000000000000E+1
BmAngle	444	9.00000000000000E+1
BmAngle	445	9.00000000000000E+1
BmAngle	446	9.00000000000000E+1
BmAngle	447	9.00000000000000E+1
BmAngle	448	9.00000000000000E+1
BmAngle	449	9.00000000000000E+1
BmAngle	450	9.00000000000000E+1
BmAngle	451	9.00000000000000E+1
BmAngle	452	9.00000000000000E+1
BmAngle	453	9.00000000000000E+1
BmAngle	454	9.00000000000000E+1
BmAngle	455	9.00000000000000E+1
BmAngle	456	9.00000000000000E+1
BmAngle	457	9.00000000000000E+1
BmAngle	458	9.00000000000000E+1
BmAngle	459	9.00000000000000E+1
BmAngle	460	9.00000000000000E+1
BmAngle	461	9.00000000000000E+1
BmAngle	462	9.00000000000000E+1
BmAngle	463	9.00000000000000E+1
BmAngle	464	9.00000000000000E+1
BmAngle	465	9.00000000000000E+1
BmAngle	466	9.00000000000000E+1
BmAngle	467	9.00000000000000E+1
BmAngle	468	9.00000000000000E+1
BmAngle	469	9.00000000000000E+1
BmAngle	470	9.00000000000000E+1
BmAngle	471	9.00000000000000E+1
BmAngle	472	9.00000000000000E+1
BmAngle	473	9.00000000000000E+1
BmAngle	474	9.00000000000000E+1
BmAngle	475	9.00000000000000E+1
BmAngle	476	9.00000000000000E+1
BmAngle	477	9.00000000000000E+1
BmAngle	478	9.00000000000000E+1
BmAngle	479	9.00000000000000E+1
BmAngle	480	9.00000000000000E+1
BmAngle	481	9.00000000000000E+1
BmAngle	482	9.00000000000000E+1
BmAngle	483	9.00000000000000E+1
BmAngle	484	9.00000000000000E+1
BmAngle	485	9.00000000000000E+1
BmAngle	486	9.00000000000000E+1
BmAngle	487	9.00000000000000E+1

BmAngle	488	9.00000000000000E+1
BmAngle	489	9.00000000000000E+1
BmAngle	490	9.00000000000000E+1
BmAngle	491	9.00000000000000E+1
BmAngle	492	9.00000000000000E+1
BmAngle	493	9.00000000000000E+1
BmAngle	494	9.00000000000000E+1
BmAngle	495	9.00000000000000E+1
BmAngle	496	9.00000000000000E+1
BmAngle	497	9.00000000000000E+1
BmAngle	498	9.00000000000000E+1
BmAngle	499	9.00000000000000E+1
BmAngle	500	9.00000000000000E+1
BmAngle	501	9.00000000000000E+1
BmAngle	502	9.00000000000000E+1
BmAngle	503	9.00000000000000E+1
BmAngle	504	9.00000000000000E+1
BmAngle	505	9.00000000000000E+1
BmAngle	506	9.00000000000000E+1
BmAngle	507	9.00000000000000E+1
BmAngle	508	9.00000000000000E+1
BmAngle	509	9.00000000000000E+1
BmAngle	510	9.00000000000000E+1
BmAngle	511	9.00000000000000E+1
BmAngle	512	9.00000000000000E+1
BmAngle	513	9.00000000000000E+1
BmAngle	514	9.00000000000000E+1
BmAngle	515	9.00000000000000E+1
BmAngle	516	9.00000000000000E+1
BmAngle	517	9.00000000000000E+1
BmAngle	518	9.00000000000000E+1
BmAngle	519	9.00000000000000E+1
BmAngle	520	9.00000000000000E+1
BmAngle	521	9.00000000000000E+1
BmAngle	522	9.00000000000000E+1
BmAngle	523	9.00000000000000E+1
BmAngle	524	9.00000000000000E+1
BmAngle	525	9.00000000000000E+1
BmAngle	526	9.00000000000000E+1
BmAngle	527	9.00000000000000E+1
BmAngle	528	9.00000000000000E+1
BmAngle	529	9.00000000000000E+1
BmAngle	530	9.00000000000000E+1
BmAngle	531	9.00000000000000E+1
BmAngle	532	9.00000000000000E+1
BmAngle	533	9.00000000000000E+1
BmAngle	534	9.00000000000000E+1
BmAngle	535	9.00000000000000E+1
BmAngle	536	9.00000000000000E+1
BmAngle	537	9.00000000000000E+1
BmAngle	538	9.00000000000000E+1
BmAngle	539	9.00000000000000E+1
BmAngle	540	9.00000000000000E+1
BmAngle	541	9.00000000000000E+1

BmAngle	542	9.00000000000000E+1
BmAngle	543	9.00000000000000E+1
BmAngle	544	9.00000000000000E+1
BmAngle	545	9.00000000000000E+1
BmAngle	546	9.00000000000000E+1
BmAngle	547	9.00000000000000E+1
BmAngle	548	9.00000000000000E+1
BmAngle	549	9.00000000000000E+1
BmAngle	550	9.00000000000000E+1
BmAngle	551	9.00000000000000E+1
BmAngle	552	9.00000000000000E+1
BmAngle	553	9.00000000000000E+1
BmAngle	554	9.00000000000000E+1
BmAngle	555	9.00000000000000E+1
BmAngle	556	9.00000000000000E+1
BmAngle	557	9.00000000000000E+1
BmAngle	558	9.00000000000000E+1
BmAngle	559	9.00000000000000E+1
BmAngle	560	9.00000000000000E+1
BmAngle	561	9.00000000000000E+1
BmAngle	562	9.00000000000000E+1
BmAngle	563	9.00000000000000E+1
BmAngle	564	9.00000000000000E+1
BmAngle	565	9.00000000000000E+1
BmAngle	566	9.00000000000000E+1
BmAngle	567	9.00000000000000E+1
BmAngle	568	9.00000000000000E+1
BmAngle	569	9.00000000000000E+1
BmAngle	570	9.00000000000000E+1
BmAngle	571	9.00000000000000E+1
BmAngle	572	9.00000000000000E+1
BmAngle	573	9.00000000000000E+1
BmAngle	574	9.00000000000000E+1
BmAngle	575	9.00000000000000E+1
BmAngle	576	9.00000000000000E+1
BmAngle	577	9.00000000000000E+1
BmAngle	578	9.00000000000000E+1
BmAngle	579	9.00000000000000E+1
BmAngle	580	9.00000000000000E+1
BmAngle	581	9.00000000000000E+1
BmAngle	582	9.00000000000000E+1
BmAngle	583	9.00000000000000E+1
BmAngle	584	9.00000000000000E+1
BmAngle	585	9.00000000000000E+1
BmAngle	586	9.00000000000000E+1
BmAngle	587	9.00000000000000E+1
BmAngle	588	9.00000000000000E+1
BmAngle	589	9.00000000000000E+1
BmAngle	590	9.00000000000000E+1
BmAngle	591	9.00000000000000E+1
BmAngle	592	9.00000000000000E+1
BmAngle	593	9.00000000000000E+1
BmAngle	594	9.00000000000000E+1
BmAngle	595	9.00000000000000E+1

BmAngle	596	9.00000000000000E+1
BmAngle	597	9.00000000000000E+1
BmAngle	598	9.00000000000000E+1
BmAngle	599	9.00000000000000E+1
BmAngle	600	9.00000000000000E+1
BmAngle	601	9.00000000000000E+1
BmAngle	602	9.00000000000000E+1
BmAngle	603	9.00000000000000E+1
BmAngle	604	9.00000000000000E+1
BmAngle	605	9.00000000000000E+1
BmAngle	606	9.00000000000000E+1
BmAngle	607	9.00000000000000E+1
BmAngle	608	9.00000000000000E+1
BmAngle	609	9.00000000000000E+1
BmAngle	610	9.00000000000000E+1
BmAngle	611	9.00000000000000E+1
BmAngle	612	9.00000000000000E+1
BmAngle	613	9.00000000000000E+1
BmAngle	614	9.00000000000000E+1
BmAngle	615	9.00000000000000E+1
BmAngle	616	9.00000000000000E+1
BmAngle	617	9.00000000000000E+1
BmAngle	618	9.00000000000000E+1
BmAngle	619	9.00000000000000E+1
BmAngle	620	9.00000000000000E+1
BmAngle	621	9.00000000000000E+1
BmAngle	622	9.00000000000000E+1
BmAngle	623	9.00000000000000E+1
BmAngle	624	9.00000000000000E+1
BmAngle	625	9.00000000000000E+1
BmAngle	626	9.00000000000000E+1
BmAngle	627	9.00000000000000E+1
BmAngle	628	9.00000000000000E+1
BmAngle	629	9.00000000000000E+1
BmAngle	630	9.00000000000000E+1
BmAngle	631	9.00000000000000E+1
BmAngle	632	9.00000000000000E+1
BmAngle	633	9.00000000000000E+1
BmAngle	634	9.00000000000000E+1
BmAngle	635	9.00000000000000E+1
BmAngle	636	9.00000000000000E+1
BmAngle	637	9.00000000000000E+1
BmAngle	638	9.00000000000000E+1
BmAngle	639	9.00000000000000E+1
BmAngle	640	9.00000000000000E+1
BmAngle	641	9.00000000000000E+1
BmAngle	642	9.00000000000000E+1
BmAngle	643	9.00000000000000E+1
BmAngle	644	9.00000000000000E+1
BmAngle	645	9.00000000000000E+1
BmAngle	646	9.00000000000000E+1
BmAngle	647	9.00000000000000E+1
BmAngle	648	9.00000000000000E+1
BmAngle	649	9.00000000000000E+1

BmAngle	650	9.00000000000000E+1
BmAngle	651	9.00000000000000E+1
BmAngle	652	9.00000000000000E+1
BmAngle	653	9.00000000000000E+1
BmAngle	654	9.00000000000000E+1
BmAngle	655	9.00000000000000E+1
BmAngle	656	9.00000000000000E+1
BmAngle	657	9.00000000000000E+1
BmAngle	658	9.00000000000000E+1
BmAngle	659	9.00000000000000E+1
BmAngle	660	9.00000000000000E+1
BmAngle	661	9.00000000000000E+1
BmAngle	662	9.00000000000000E+1
BmAngle	663	9.00000000000000E+1
BmAngle	664	9.00000000000000E+1
BmAngle	665	9.00000000000000E+1
BmAngle	666	9.00000000000000E+1
BmAngle	667	9.00000000000000E+1
BmAngle	668	9.00000000000000E+1
BmAngle	669	9.00000000000000E+1
BmAngle	670	9.00000000000000E+1
BmAngle	671	9.00000000000000E+1
BmAngle	672	9.00000000000000E+1
BmAngle	673	9.00000000000000E+1
BmAngle	674	9.00000000000000E+1
BmAngle	675	9.00000000000000E+1
BmAngle	676	9.00000000000000E+1
BmAngle	677	9.00000000000000E+1
BmAngle	678	9.00000000000000E+1
BmAngle	679	9.00000000000000E+1
BmAngle	680	9.00000000000000E+1
BmAngle	681	9.00000000000000E+1
BmAngle	682	9.00000000000000E+1
BmAngle	683	9.00000000000000E+1
BmAngle	684	9.00000000000000E+1
BmAngle	685	9.00000000000000E+1
BmAngle	686	9.00000000000000E+1
BmAngle	687	9.00000000000000E+1
BmAngle	688	9.00000000000000E+1
BmAngle	689	9.00000000000000E+1
BmAngle	690	9.00000000000000E+1
BmAngle	691	9.00000000000000E+1
BmAngle	692	9.00000000000000E+1
BmAngle	693	9.00000000000000E+1
BmAngle	694	9.00000000000000E+1
BmAngle	695	9.00000000000000E+1
BmAngle	696	9.00000000000000E+1
BmAngle	697	9.00000000000000E+1
BmAngle	698	9.00000000000000E+1
BmAngle	699	9.00000000000000E+1
BmAngle	700	9.00000000000000E+1
BmAngle	701	9.00000000000000E+1
BmAngle	702	9.00000000000000E+1
BmAngle	703	9.00000000000000E+1

BmAngle	704	9.00000000000000E+1
BmAngle	705	9.00000000000000E+1
BmAngle	706	9.00000000000000E+1
BmAngle	707	9.00000000000000E+1
BmAngle	708	9.00000000000000E+1
BmAngle	709	9.00000000000000E+1
BmAngle	710	9.00000000000000E+1
BmAngle	711	9.00000000000000E+1
BmAngle	712	9.00000000000000E+1
BmAngle	713	9.00000000000000E+1
BmAngle	714	9.00000000000000E+1
BmAngle	715	9.00000000000000E+1
BmAngle	716	9.00000000000000E+1
BmAngle	717	9.00000000000000E+1
BmAngle	718	9.00000000000000E+1
BmAngle	719	9.00000000000000E+1
BmAngle	720	9.00000000000000E+1
BmAngle	721	9.00000000000000E+1
BmAngle	722	9.00000000000000E+1
BmAngle	723	9.00000000000000E+1
BmAngle	724	9.00000000000000E+1
BmAngle	725	9.00000000000000E+1
BmAngle	726	9.00000000000000E+1
BmAngle	727	9.00000000000000E+1
BmAngle	728	9.00000000000000E+1
BmAngle	729	9.00000000000000E+1
BmAngle	730	9.00000000000000E+1
BmAngle	731	9.00000000000000E+1
BmAngle	732	9.00000000000000E+1
BmAngle	733	9.00000000000000E+1
BmAngle	734	9.00000000000000E+1
BmAngle	735	9.00000000000000E+1
BmAngle	736	9.00000000000000E+1
BmAngle	737	9.00000000000000E+1
BmAngle	738	9.00000000000000E+1
BmAngle	739	9.00000000000000E+1
BmAngle	740	9.00000000000000E+1
BmAngle	741	9.00000000000000E+1
BmAngle	742	9.00000000000000E+1
BmAngle	743	9.00000000000000E+1
BmAngle	744	9.00000000000000E+1
BmAngle	745	9.00000000000000E+1
BmAngle	746	9.00000000000000E+1
BmAngle	747	9.00000000000000E+1
BmAngle	748	9.00000000000000E+1
BmAngle	749	9.00000000000000E+1
BmAngle	750	9.00000000000000E+1
BmAngle	751	9.00000000000000E+1
BmAngle	752	9.00000000000000E+1
BmAngle	753	9.00000000000000E+1
BmAngle	754	9.00000000000000E+1
BmAngle	755	9.00000000000000E+1
BmAngle	756	9.00000000000000E+1
BmAngle	757	9.00000000000000E+1

BmAngle	758	9.00000000000000E+1
BmAngle	759	9.00000000000000E+1
BmAngle	760	9.00000000000000E+1
BmAngle	761	9.00000000000000E+1
BmAngle	762	9.00000000000000E+1
BmAngle	763	9.00000000000000E+1
BmAngle	764	9.00000000000000E+1
BmAngle	765	9.00000000000000E+1
BmAngle	766	9.00000000000000E+1
BmAngle	767	9.00000000000000E+1
BmAngle	768	9.00000000000000E+1
BmAngle	769	9.00000000000000E+1
BmAngle	770	9.00000000000000E+1
BmAngle	771	9.00000000000000E+1
BmAngle	772	9.00000000000000E+1
BmAngle	773	9.00000000000000E+1
BmAngle	774	9.00000000000000E+1
BmAngle	775	9.00000000000000E+1
BmAngle	776	9.00000000000000E+1
BmAngle	777	9.00000000000000E+1
BmAngle	778	9.00000000000000E+1
BmAngle	779	9.00000000000000E+1
BmAngle	780	9.00000000000000E+1
BmAngle	781	9.00000000000000E+1
BmAngle	782	9.00000000000000E+1
BmAngle	783	9.00000000000000E+1
BmAngle	784	9.00000000000000E+1
BmAngle	785	9.00000000000000E+1
BmAngle	786	9.00000000000000E+1
BmAngle	787	9.00000000000000E+1
BmAngle	788	9.00000000000000E+1
BmAngle	789	9.00000000000000E+1
BmAngle	790	9.00000000000000E+1
BmAngle	791	9.00000000000000E+1
BmAngle	792	9.00000000000000E+1
BmAngle	793	9.00000000000000E+1
BmAngle	794	9.00000000000000E+1
BmAngle	795	9.00000000000000E+1
BmAngle	796	9.00000000000000E+1
BmAngle	797	9.00000000000000E+1
BmAngle	798	9.00000000000000E+1
BmAngle	799	9.00000000000000E+1
BmAngle	800	9.00000000000000E+1
BmAngle	801	9.00000000000000E+1
BmAngle	802	9.00000000000000E+1
BmAngle	803	9.00000000000000E+1
BmAngle	804	9.00000000000000E+1
BmAngle	805	9.00000000000000E+1
BmAngle	806	9.00000000000000E+1
BmAngle	807	9.00000000000000E+1
BmAngle	808	9.00000000000000E+1
BmAngle	809	9.00000000000000E+1
BmAngle	810	9.00000000000000E+1
BmAngle	811	9.00000000000000E+1

```
   BmAngle                 812     9.00000000000000E+1
   BmAngle                 813     9.00000000000000E+1
   BmAngle                 814     9.00000000000000E+1
   BmAngle                 815     9.00000000000000E+1
   BmAngle                 816     9.00000000000000E+1
   BmAngle                 817     9.00000000000000E+1
   BmAngle                 818     9.00000000000000E+1
   BmAngle                 819     9.00000000000000E+1
   BmAngle                 820     9.00000000000000E+1
   BmAngle                 821     9.00000000000000E+1
   BmAngle                 822     9.00000000000000E+1
   BmAngle                 823     9.00000000000000E+1
   BmAngle                 824     9.00000000000000E+1
   BmAngle                 825     9.00000000000000E+1
   BmAngle                 826     9.00000000000000E+1
   BmAngle                 827     9.00000000000000E+1
   BmAngle                 828     9.00000000000000E+1
   BmAngle                 829     9.00000000000000E+1
   BmAngle                 830     9.00000000000000E+1
   BmAngle                 831     9.00000000000000E+1
   BmAngle                 832     9.00000000000000E+1
   BmAngle                 833     9.00000000000000E+1
   BmAngle                 834     9.00000000000000E+1
   BmAngle                 835     9.00000000000000E+1
   BmAngle                 836     9.00000000000000E+1
   BmAngle                 837     9.00000000000000E+1
   BmAngle                 838     9.00000000000000E+1
   BmAngle                 839     9.00000000000000E+1
   BmAngle                 840     9.00000000000000E+1
   BmAngle                 841     9.00000000000000E+1
   BmAngle                 842     9.00000000000000E+1
   BmAngle                 843     9.00000000000000E+1
   BmAngle                 844     9.00000000000000E+1
   BmAngle                 845     9.00000000000000E+1
   BmAngle                 846     9.00000000000000E+1
   BmAngle                 847     9.00000000000000E+1
   BmAngle                 848     9.00000000000000E+1
   BmAngle                 849     9.00000000000000E+1
   BmAngle                 850     9.00000000000000E+1
   BmAngle                 851     9.00000000000000E+1
   BmAngle                 852     9.00000000000000E+1
   BmAngle                 853     9.00000000000000E+1
   BmAngle                 854     9.00000000000000E+1
   BmAngle                 855     9.00000000000000E+1
   BmAngle                 856     9.00000000000000E+1
   BmAngle                 857     9.00000000000000E+1
   BmAngle                 858     9.00000000000000E+1
   BmAngle                 859     9.00000000000000E+1
   BmAngle                 860     9.00000000000000E+1

/ ____________________________________________________________________________
/ BEAM TRANSLATIONAL END-RELEASES

   BmEndReleaseT           897       1   T1
```

```
   BmEndReleaseT          899       1   T1                          
   BmEndReleaseT          901       1   T1                          T2
   BmEndReleaseT          902       1   T1                          T2
   BmEndReleaseT          903       1   T1                          T2
   BmEndReleaseT          904       1   T1                          T2

/ ____________________________________________________________________________
/ BEAM ROTATIONAL END-RELEASES
   BmEndReleaseR           23       2   R1                          R2
   BmEndReleaseR           24       2   R1                          R2
   BmEndReleaseR           69       1   R1
   BmEndReleaseR           74       1   R1
   BmEndReleaseR           79       1   R1
   BmEndReleaseR           84       1   R1
   BmEndReleaseR           89       1   R1
   BmEndReleaseR           94       1   R1
   BmEndReleaseR           99       1   R1
   BmEndReleaseR          104       1   R1
   BmEndReleaseR          109       1   R1
   BmEndReleaseR          114       1   R1
   BmEndReleaseR          119       1   R1
   BmEndReleaseR          124       1   R1
   BmEndReleaseR          129       1   R1
   BmEndReleaseR          134       1   R1
   BmEndReleaseR          139       1   R1
   BmEndReleaseR          144       1   R1
   BmEndReleaseR          149       1   R1
   BmEndReleaseR          154       1   R1
```

BmEndReleaseR	159	1	R1	
BmEndReleaseR	434	1	R1	
BmEndReleaseR	439	1	R1	R2
BmEndReleaseR	444	1	R1	R2
BmEndReleaseR	637	2	R1	R2
BmEndReleaseR	638	1	R1	R2
BmEndReleaseR	643	2	R1	R2
BmEndReleaseR	644	1	R1	R2
BmEndReleaseR	669	2	R1	R2
BmEndReleaseR	670	2	R1	R2
BmEndReleaseR	671	2	R1	R2
BmEndReleaseR	672	2	R1	R2
BmEndReleaseR	673	2	R1	R2
BmEndReleaseR	674	2	R1	R2
BmEndReleaseR	675	2	R1	R2
BmEndReleaseR	676	2	R1	R2
BmEndReleaseR	677	2	R1	R2
BmEndReleaseR	678	2	R1	R2
BmEndReleaseR	679	2	R1	R2
BmEndReleaseR	680	2	R1	R2
BmEndReleaseR	681	2	R1	R2
BmEndReleaseR	682	2	R1	R2
BmEndReleaseR	683	2	R1	R2
BmEndReleaseR	684	2	R1	R2
BmEndReleaseR	685	1	R1	R2
BmEndReleaseR	686	1	R1	R2
BmEndReleaseR	687	1	R1	R2

BmEndReleaseR	688	1	R1	R2
BmEndReleaseR	689	1	R1	R2
BmEndReleaseR	690	1	R1	R2
BmEndReleaseR	691	1	R1	R2
BmEndReleaseR	692	1	R1	R2
BmEndReleaseR	725	1	R1	R2
BmEndReleaseR	726	1	R1	R2
BmEndReleaseR	727	1	R1	R2
BmEndReleaseR	728	1	R1	R2
BmEndReleaseR	729	1	R1	R2
BmEndReleaseR	730	1	R1	R2
BmEndReleaseR	731	1	R1	R2
BmEndReleaseR	732	1	R1	R2
BmEndReleaseR	765	2	R1	R2
BmEndReleaseR	766	2	R1	R2
BmEndReleaseR	767	2	R1	R2
BmEndReleaseR	768	2	R1	R2
BmEndReleaseR	769	2	R1	R2
BmEndReleaseR	770	2	R1	R2
BmEndReleaseR	771	2	R1	R2
BmEndReleaseR	772	2	R1	R2
BmEndReleaseR	773	1	R1	R2
BmEndReleaseR	774	1	R1	R2
BmEndReleaseR	775	1	R1	R2
BmEndReleaseR	776	1	R1	R2
BmEndReleaseR	777	1	R1	R2
BmEndReleaseR	778	1	R1	R2

BmEndReleaseR	779	1	R1		R2
BmEndReleaseR	780	1	R1		R2
BmEndReleaseR	813	2	R1		R2
BmEndReleaseR	814	2	R1		R2
BmEndReleaseR	815	2	R1		R2
BmEndReleaseR	816	2	R1		R2
BmEndReleaseR	817	2	R1		R2
BmEndReleaseR	818	2	R1		R2
BmEndReleaseR	819	2	R1		R2
BmEndReleaseR	820	2	R1		R2
BmEndReleaseR	821	1	R1		R2
BmEndReleaseR	822	1	R1		R2
BmEndReleaseR	823	1	R1		R2
BmEndReleaseR	824	1	R1		R2
BmEndReleaseR	825	1	R1		R2
BmEndReleaseR	826	1	R1		R2
BmEndReleaseR	827	1	R1		R2
BmEndReleaseR	828	1	R1		R2
BmEndReleaseR	897	1	R1		R2
R3					
BmEndReleaseR	898	1	R1		R2
R3					
BmEndReleaseR	899	1	R1		R2
R3					
BmEndReleaseR	900	1	R1		R2
R3					
BmEndReleaseR	901	1	R1		R2
R3					
BmEndReleaseR	902	1	R1		R2
R3					
BmEndReleaseR	903	1	R1		R2
R3					
BmEndReleaseR	904	1	R1		R2
R3					

```
/ ____________________________________________________________________________
/ PLATE ELEMENTS

  Quad4                    1       0      14       1     545     546     346
  1
  Quad4                    2       0      14       1     577     545       1
368
  Quad4                    3       0      14       1     547     548     347
  2
  Quad4                    4       0      14       1     548     580     371
347
  Quad4                    5       0      14       1     580     579     370
371
  Quad4                    6       0      14       1     579     578     369
370
  Quad4                    7       0      14       1     578     577     368
369
  Quad4                    8       0      14       1     599     547       2
390
  Quad4                    9       0      14       1     600     599     390
391
  Quad4                   10       0      14       1     601     600     391
392
  Quad4                   11       0      14       1     550     601     392
348
  Quad4                   12       0      14       1     549     550     348
349
  Quad4                   13       0      14       1     551     549     349
  3
  Quad4                   14       0      14       1     581     551       3
372
  Quad4                   15       0      14       1     582     581     372
373
  Quad4                   16       0      14       1     583     582     373
374
  Quad4                   17       0      14       1     584     583     374
375
  Quad4                   18       0      14       1     553     584     375
350
  Quad4                   19       0      14       1     552     553     350
  4
  Quad4                   20       0      14       1     585     552       4
376
  Quad4                   21       0      14       1     586     585     376
377
  Quad4                   22       0      14       1     587     586     377
378
  Quad4                   23       0      14       1     588     587     378
379
  Quad4                   24       0      14       1     555     588     379
351
  Quad4                   25       0      14       1     554     555     351
  5
  Quad4                   26       0      14       1     589     554       5
```

380
Quad4 27 0 14 1 590 589 380
381
Quad4 28 0 14 1 591 590 381
382
Quad4 29 0 14 1 592 591 382
383
Quad4 30 0 14 1 557 592 383
352
Quad4 31 0 14 1 556 557 352
6
Quad4 32 0 14 1 593 556 6
384
Quad4 33 0 14 1 594 593 384
385
Quad4 34 0 14 1 595 594 385
386
Quad4 35 0 14 1 596 595 386
387
Quad4 36 0 14 1 559 596 387
353
Quad4 37 0 14 1 558 559 353
7
Quad4 38 0 14 1 597 558 7
388
Quad4 39 0 14 1 598 597 388
389
Quad4 40 0 14 1 561 598 389
354
Quad4 41 0 14 1 560 561 354
355
Quad4 42 0 14 1 563 560 355
356
Quad4 43 0 14 1 562 563 356
8
Quad4 44 0 14 1 573 562 8
364
Quad4 45 0 14 1 574 573 364
365
Quad4 46 0 14 1 575 574 365
366
Quad4 47 0 14 1 576 575 366
367
Quad4 48 0 14 1 565 576 367
357
Quad4 49 0 14 1 564 565 357
9
Quad4 50 0 14 1 569 564 9
360
Quad4 51 0 14 1 570 569 360
361
Quad4 52 0 14 1 571 570 361
362
Quad4 53 0 14 1 572 571 362

363
  Quad4 54 0 14 1 567 572 363
358
  Quad4 55 0 14 1 566 567 358
 10
  Quad4 56 0 14 1 568 566 10
359
  Quad4 57 0 14 1 399 398 602
603
  Quad4 58 0 14 1 441 399 603
604
  Quad4 59 0 14 1 401 400 605
606
  Quad4 60 0 14 1 400 444 607
605
  Quad4 61 0 14 1 444 443 608
607
  Quad4 62 0 14 1 443 442 609
608
  Quad4 63 0 14 1 442 441 604
609
  Quad4 64 0 14 1 463 401 606
610
  Quad4 65 0 14 1 464 463 610
611
  Quad4 66 0 14 1 465 464 611
612
  Quad4 67 0 14 1 402 465 612
613
  Quad4 68 0 14 1 403 402 613
614
  Quad4 69 0 14 1 404 403 614
615
  Quad4 70 0 14 1 445 404 615
616
  Quad4 71 0 14 1 446 445 616
617
  Quad4 72 0 14 1 447 446 617
618
  Quad4 73 0 14 1 448 447 618
619
  Quad4 74 0 14 1 405 448 619
620
  Quad4 75 0 14 1 406 405 620
621
  Quad4 76 0 14 1 449 406 621
622
  Quad4 77 0 14 1 450 449 622
623
  Quad4 78 0 14 1 451 450 623
624
  Quad4 79 0 14 1 452 451 624
625
  Quad4 80 0 14 1 407 452 625

626
Quad4 81 0 14 1 408 407 626
627
Quad4 82 0 14 1 453 408 627
628
Quad4 83 0 14 1 454 453 628
629
Quad4 84 0 14 1 455 454 629
630
Quad4 85 0 14 1 456 455 630
631
Quad4 86 0 14 1 409 456 631
632
Quad4 87 0 14 1 410 409 632
633
Quad4 88 0 14 1 457 410 633
634
Quad4 89 0 14 1 458 457 634
635
Quad4 90 0 14 1 459 458 635
636
Quad4 91 0 14 1 460 459 636
637
Quad4 92 0 14 1 411 460 637
638
Quad4 93 0 14 1 412 411 638
639
Quad4 94 0 14 1 461 412 639
640
Quad4 95 0 14 1 462 461 640
641
Quad4 96 0 14 1 413 462 641
642
Quad4 97 0 14 1 414 413 642
643
Quad4 98 0 14 1 415 414 643
644
Quad4 99 0 14 1 416 415 644
645
Quad4 100 0 14 1 437 416 645
646
Quad4 101 0 14 1 438 437 646
647
Quad4 102 0 14 1 439 438 647
648
Quad4 103 0 14 1 440 439 648
649
Quad4 104 0 14 1 417 440 649
650
Quad4 105 0 14 1 418 417 650
651
Quad4 106 0 14 1 433 418 651
652
Quad4 107 0 14 1 434 433 652

653
Quad4 108 0 14 1 435 434 653
654
Quad4 109 0 14 1 436 435 654
655
Quad4 110 0 14 1 419 436 655
656
Quad4 111 0 14 1 420 419 656
657
Quad4 112 0 14 1 432 420 657
658
Quad4 113 0 15 1 603 602 819
820
Quad4 114 0 15 1 604 603 820
821
Quad4 115 0 15 1 606 605 822
823
Quad4 116 0 15 1 605 607 824
822
Quad4 117 0 15 1 607 608 825
824
Quad4 118 0 15 1 608 609 826
825
Quad4 119 0 15 1 609 604 821
826
Quad4 120 0 15 1 610 606 823
827
Quad4 121 0 15 1 611 610 827
828
Quad4 122 0 15 1 612 611 828
829
Quad4 123 0 15 1 613 612 829
830
Quad4 124 0 15 1 614 613 830
831
Quad4 125 0 15 1 615 614 831
832
Quad4 126 0 15 1 616 615 832
833
Quad4 127 0 15 1 617 616 833
834
Quad4 128 0 15 1 618 617 834
835
Quad4 129 0 15 1 619 618 835
836
Quad4 130 0 15 1 620 619 836
837
Quad4 131 0 15 1 621 620 837
838
Quad4 132 0 15 1 622 621 838
839
Quad4 133 0 15 1 623 622 839
840
Quad4 134 0 15 1 624 623 840

841
Quad4 135 0 15 1 625 624 841
842
Quad4 136 0 15 1 626 625 842
843
Quad4 137 0 15 1 627 626 843
844
Quad4 138 0 15 1 628 627 844
845
Quad4 139 0 15 1 629 628 845
846
Quad4 140 0 15 1 630 629 846
847
Quad4 141 0 15 1 631 630 847
848
Quad4 142 0 15 1 632 631 848
849
Quad4 143 0 15 1 633 632 849
850
Quad4 144 0 15 1 634 633 850
851
Quad4 145 0 15 1 635 634 851
852
Quad4 146 0 15 1 636 635 852
853
Quad4 147 0 15 1 637 636 853
854
Quad4 148 0 15 1 638 637 854
855
Quad4 149 0 15 1 639 638 855
856
Quad4 150 0 15 1 640 639 856
857
Quad4 151 0 15 1 641 640 857
858
Quad4 152 0 15 1 642 641 858
859
Quad4 153 0 15 1 643 642 859
860
Quad4 154 0 15 1 644 643 860
861
Quad4 155 0 15 1 645 644 861
862
Quad4 156 0 15 1 646 645 862
863
Quad4 157 0 15 1 647 646 863
864
Quad4 158 0 15 1 648 647 864
865
Quad4 159 0 15 1 649 648 865
866
Quad4 160 0 15 1 650 649 866
867
Quad4 161 0 15 1 651 650 867

868
Quad4 162 0 15 1 652 651 868
869
Quad4 163 0 15 1 653 652 869
870
Quad4 164 0 15 1 654 653 870
871
Quad4 165 0 15 1 655 654 871
872
Quad4 166 0 15 1 656 655 872
873
Quad4 167 0 15 1 657 656 873
874
Quad4 168 0 15 1 658 657 874
875
Quad4 169 0 16 1 876 877 398
399
Quad4 170 0 16 1 878 876 399
441
Quad4 171 0 16 1 879 880 400
401
Quad4 172 0 16 1 880 881 444
400
Quad4 173 0 16 1 881 882 443
444
Quad4 174 0 16 1 882 883 442
443
Quad4 175 0 16 1 883 878 441
442
Quad4 176 0 16 1 884 879 401
463
Quad4 177 0 16 1 885 884 463
464
Quad4 178 0 16 1 886 885 464
465
Quad4 179 0 16 1 887 886 465
402
Quad4 180 0 16 1 888 887 402
403
Quad4 181 0 16 1 889 888 403
404
Quad4 182 0 16 1 890 889 404
445
Quad4 183 0 16 1 891 890 445
446
Quad4 184 0 16 1 892 891 446
447
Quad4 185 0 16 1 893 892 447
448
Quad4 186 0 16 1 894 893 448
405
Quad4 187 0 16 1 895 894 405
406
Quad4 188 0 16 1 896 895 406

449
Quad4 189 0 16 1 897 896 449
450
Quad4 190 0 16 1 898 897 450
451
Quad4 191 0 16 1 899 898 451
452
Quad4 192 0 16 1 900 899 452
407
Quad4 193 0 16 1 901 900 407
408
Quad4 194 0 16 1 902 901 408
453
Quad4 195 0 16 1 903 902 453
454
Quad4 196 0 16 1 904 903 454
455
Quad4 197 0 16 1 905 904 455
456
Quad4 198 0 16 1 906 905 456
409
Quad4 199 0 16 1 907 906 409
410
Quad4 200 0 16 1 908 907 410
457
Quad4 201 0 16 1 909 908 457
458
Quad4 202 0 16 1 910 909 458
459
Quad4 203 0 16 1 911 910 459
460
Quad4 204 0 16 1 912 911 460
411
Quad4 205 0 16 1 913 912 411
412
Quad4 206 0 16 1 914 913 412
461
Quad4 207 0 16 1 915 914 461
462
Quad4 208 0 16 1 916 915 462
413
Quad4 209 0 16 1 917 916 413
414
Quad4 210 0 16 1 918 917 414
415
Quad4 211 0 16 1 919 918 415
416
Quad4 212 0 16 1 920 919 416
437
Quad4 213 0 16 1 921 920 437
438
Quad4 214 0 16 1 922 921 438
439
Quad4 215 0 16 1 923 922 439

440
Quad4 216 0 16 1 924 923 440
417
Quad4 217 0 16 1 925 924 417
418
Quad4 218 0 16 1 926 925 418
433
Quad4 219 0 16 1 927 926 433
434
Quad4 220 0 16 1 928 927 434
435
Quad4 221 0 16 1 929 928 435
436
Quad4 222 0 16 1 930 929 436
419
Quad4 223 0 16 1 931 930 419
420
Quad4 224 0 16 1 932 931 420
432
Quad4 225 0 16 1 1 346 933
934
Quad4 226 0 16 1 368 1 934
935
Quad4 227 0 16 1 2 347 936
937
Quad4 228 0 16 1 347 371 938
936
Quad4 229 0 16 1 371 370 939
938
Quad4 230 0 16 1 370 369 940
939
Quad4 231 0 16 1 369 368 935
940
Quad4 232 0 16 1 390 2 937
941
Quad4 233 0 16 1 391 390 941
942
Quad4 234 0 16 1 392 391 942
943
Quad4 235 0 16 1 348 392 943
944
Quad4 236 0 16 1 349 348 944
945
Quad4 237 0 16 1 3 349 945
946
Quad4 238 0 16 1 372 3 946
947
Quad4 239 0 16 1 373 372 947
948
Quad4 240 0 16 1 374 373 948
949
Quad4 241 0 16 1 375 374 949
950
Quad4 242 0 16 1 350 375 950

951
Quad4 243 0 16 1 4 350 951
952
Quad4 244 0 16 1 376 4 952
953
Quad4 245 0 16 1 377 376 953
954
Quad4 246 0 16 1 378 377 954
955
Quad4 247 0 16 1 379 378 955
956
Quad4 248 0 16 1 351 379 956
957
Quad4 249 0 16 1 5 351 957
958
Quad4 250 0 16 1 380 5 958
959
Quad4 251 0 16 1 381 380 959
960
Quad4 252 0 16 1 382 381 960
961
Quad4 253 0 16 1 383 382 961
962
Quad4 254 0 16 1 352 383 962
963
Quad4 255 0 16 1 6 352 963
964
Quad4 256 0 16 1 384 6 964
965
Quad4 257 0 16 1 385 384 965
966
Quad4 258 0 16 1 386 385 966
967
Quad4 259 0 16 1 387 386 967
968
Quad4 260 0 16 1 353 387 968
969
Quad4 261 0 16 1 7 353 969
970
Quad4 262 0 16 1 388 7 970
971
Quad4 263 0 16 1 389 388 971
972
Quad4 264 0 16 1 354 389 972
973
Quad4 265 0 16 1 355 354 973
974
Quad4 266 0 16 1 356 355 974
975
Quad4 267 0 16 1 8 356 975
976
Quad4 268 0 16 1 364 8 976
977
Quad4 269 0 16 1 365 364 977

978
Quad4 270 0 16 1 366 365 978
979
Quad4 271 0 16 1 367 366 979
980
Quad4 272 0 16 1 357 367 980
981
Quad4 273 0 16 1 9 357 981
982
Quad4 274 0 16 1 360 9 982
983
Quad4 275 0 16 1 361 360 983
984
Quad4 276 0 16 1 362 361 984
985
Quad4 277 0 16 1 363 362 985
986
Quad4 278 0 16 1 358 363 986
987
Quad4 279 0 16 1 10 358 987
988
Quad4 280 0 16 1 359 10 988
989
Quad4 281 0 15 1 990 991 546
545
Quad4 282 0 15 1 992 990 545
577
Quad4 283 0 15 1 993 994 548
547
Quad4 284 0 15 1 994 995 580
548
Quad4 285 0 15 1 995 996 579
580
Quad4 286 0 15 1 996 997 578
579
Quad4 287 0 15 1 997 992 577
578
Quad4 288 0 15 1 998 993 547
599
Quad4 289 0 15 1 999 998 599
600
Quad4 290 0 15 1 1000 999 600
601
Quad4 291 0 15 1 1001 1000 601
550
Quad4 292 0 15 1 1002 1001 550
549
Quad4 293 0 15 1 1003 1002 549
551
Quad4 294 0 15 1 1004 1003 551
581
Quad4 295 0 15 1 1005 1004 581
582
Quad4 296 0 15 1 1006 1005 582

583
Quad4 297 0 15 1 1007 1006 583
584
Quad4 298 0 15 1 1008 1007 584
553
Quad4 299 0 15 1 1009 1008 553
552
Quad4 300 0 15 1 1010 1009 552
585
Quad4 301 0 15 1 1011 1010 585
586
Quad4 302 0 15 1 1012 1011 586
587
Quad4 303 0 15 1 1013 1012 587
588
Quad4 304 0 15 1 1014 1013 588
555
Quad4 305 0 15 1 1015 1014 555
554
Quad4 306 0 15 1 1016 1015 554
589
Quad4 307 0 15 1 1017 1016 589
590
Quad4 308 0 15 1 1018 1017 590
591
Quad4 309 0 15 1 1019 1018 591
592
Quad4 310 0 15 1 1020 1019 592
557
Quad4 311 0 15 1 1021 1020 557
556
Quad4 312 0 15 1 1022 1021 556
593
Quad4 313 0 15 1 1023 1022 593
594
Quad4 314 0 15 1 1024 1023 594
595
Quad4 315 0 15 1 1025 1024 595
596
Quad4 316 0 15 1 1026 1025 596
559
Quad4 317 0 15 1 1027 1026 559
558
Quad4 318 0 15 1 1028 1027 558
597
Quad4 319 0 15 1 1029 1028 597
598
Quad4 320 0 15 1 1030 1029 598
561
Quad4 321 0 15 1 1031 1030 561
560
Quad4 322 0 15 1 1032 1031 560
563
Quad4 323 0 15 1 1033 1032 563

```
 562
   Quad4                  324       0      15       1    1034    1033     562
 573
   Quad4                  325       0      15       1    1035    1034     573
 574
   Quad4                  326       0      15       1    1036    1035     574
 575
   Quad4                  327       0      15       1    1037    1036     575
 576
   Quad4                  328       0      15       1    1038    1037     576
 565
   Quad4                  329       0      15       1    1039    1038     565
 564
   Quad4                  330       0      15       1    1040    1039     564
 569
   Quad4                  331       0      15       1    1041    1040     569
 570
   Quad4                  332       0      15       1    1042    1041     570
 571
   Quad4                  333       0      15       1    1043    1042     571
 572
   Quad4                  334       0      15       1    1044    1043     572
 567
   Quad4                  335       0      15       1    1045    1044     567
 566
   Quad4                  336       0      15       1    1046    1045     566
 568

/ ____________________________________________________________________________
/ PLATE PATCH TYPES

   PlPatchType              1       2       8     0.00000000000000E+0
0.00000000000000E+0      0.00000000000000E+0      0.00000000000000E+0
   PlPatchType              2       2       8     0.00000000000000E+0
0.00000000000000E+0      0.00000000000000E+0      0.00000000000000E+0
   PlPatchType              3       2       8     0.00000000000000E+0
0.00000000000000E+0      0.00000000000000E+0      0.00000000000000E+0
   PlPatchType              4       2       8     0.00000000000000E+0
0.00000000000000E+0      0.00000000000000E+0      0.00000000000000E+0
   PlPatchType              5       2       8     0.00000000000000E+0
0.00000000000000E+0      0.00000000000000E+0      0.00000000000000E+0
   PlPatchType              6       2       8     0.00000000000000E+0
0.00000000000000E+0      0.00000000000000E+0      0.00000000000000E+0
   PlPatchType              7       2       8     0.00000000000000E+0
0.00000000000000E+0      0.00000000000000E+0      0.00000000000000E+0
   PlPatchType              8       2       8     0.00000000000000E+0
0.00000000000000E+0      0.00000000000000E+0      0.00000000000000E+0
   PlPatchType              9       2       8     0.00000000000000E+0
0.00000000000000E+0      0.00000000000000E+0      0.00000000000000E+0
   PlPatchType             10       2       8     0.00000000000000E+0
0.00000000000000E+0      0.00000000000000E+0      0.00000000000000E+0
   PlPatchType             11       2       8     0.00000000000000E+0
0.00000000000000E+0      0.00000000000000E+0      0.00000000000000E+0
   PlPatchType             12       2       8     0.00000000000000E+0
```

0.00000000000000E+0	0.00000000000000E+0			0.00000000000000E+0
PlPatchType	13	2	8	0.00000000000000E+0
0.00000000000000E+0	0.00000000000000E+0			0.00000000000000E+0
PlPatchType	14	2	8	0.00000000000000E+0
0.00000000000000E+0	0.00000000000000E+0			0.00000000000000E+0
PlPatchType	15	2	8	0.00000000000000E+0
0.00000000000000E+0	0.00000000000000E+0			0.00000000000000E+0
PlPatchType	16	2	8	0.00000000000000E+0
0.00000000000000E+0	0.00000000000000E+0			0.00000000000000E+0
PlPatchType	17	2	8	0.00000000000000E+0
0.00000000000000E+0	0.00000000000000E+0			0.00000000000000E+0
PlPatchType	18	2	8	0.00000000000000E+0
0.00000000000000E+0	0.00000000000000E+0			0.00000000000000E+0
PlPatchType	19	2	8	0.00000000000000E+0
0.00000000000000E+0	0.00000000000000E+0			0.00000000000000E+0
PlPatchType	20	2	8	0.00000000000000E+0
0.00000000000000E+0	0.00000000000000E+0			0.00000000000000E+0
PlPatchType	21	2	8	0.00000000000000E+0
0.00000000000000E+0	0.00000000000000E+0			0.00000000000000E+0
PlPatchType	22	2	8	0.00000000000000E+0
0.00000000000000E+0	0.00000000000000E+0			0.00000000000000E+0
PlPatchType	23	2	8	0.00000000000000E+0
0.00000000000000E+0	0.00000000000000E+0			0.00000000000000E+0
PlPatchType	24	2	8	0.00000000000000E+0
0.00000000000000E+0	0.00000000000000E+0			0.00000000000000E+0
PlPatchType	25	2	8	0.00000000000000E+0
0.00000000000000E+0	0.00000000000000E+0			0.00000000000000E+0
PlPatchType	26	2	8	0.00000000000000E+0
0.00000000000000E+0	0.00000000000000E+0			0.00000000000000E+0
PlPatchType	27	2	8	0.00000000000000E+0
0.00000000000000E+0	0.00000000000000E+0			0.00000000000000E+0
PlPatchType	28	2	8	0.00000000000000E+0
0.00000000000000E+0	0.00000000000000E+0			0.00000000000000E+0
PlPatchType	29	2	8	0.00000000000000E+0
0.00000000000000E+0	0.00000000000000E+0			0.00000000000000E+0
PlPatchType	30	2	8	0.00000000000000E+0
0.00000000000000E+0	0.00000000000000E+0			0.00000000000000E+0
PlPatchType	31	2	8	0.00000000000000E+0
0.00000000000000E+0	0.00000000000000E+0			0.00000000000000E+0
PlPatchType	32	2	8	0.00000000000000E+0
0.00000000000000E+0	0.00000000000000E+0			0.00000000000000E+0
PlPatchType	33	2	8	0.00000000000000E+0
0.00000000000000E+0	0.00000000000000E+0			0.00000000000000E+0
PlPatchType	34	2	8	0.00000000000000E+0
0.00000000000000E+0	0.00000000000000E+0			0.00000000000000E+0
PlPatchType	35	2	8	0.00000000000000E+0
0.00000000000000E+0	0.00000000000000E+0			0.00000000000000E+0
PlPatchType	36	2	8	0.00000000000000E+0
0.00000000000000E+0	0.00000000000000E+0			0.00000000000000E+0
PlPatchType	37	2	8	0.00000000000000E+0
0.00000000000000E+0	0.00000000000000E+0			0.00000000000000E+0
PlPatchType	38	2	8	0.00000000000000E+0
0.00000000000000E+0	0.00000000000000E+0			0.00000000000000E+0
PlPatchType	39	2	8	0.00000000000000E+0

0.00000000000000E+0	0.00000000000000E+0			0.00000000000000E+0
PlPatchType	40	2	8	0.00000000000000E+0
0.00000000000000E+0	0.00000000000000E+0			0.00000000000000E+0
PlPatchType	41	2	8	0.00000000000000E+0
0.00000000000000E+0	0.00000000000000E+0			0.00000000000000E+0
PlPatchType	42	2	8	0.00000000000000E+0
0.00000000000000E+0	0.00000000000000E+0			0.00000000000000E+0
PlPatchType	43	2	8	0.00000000000000E+0
0.00000000000000E+0	0.00000000000000E+0			0.00000000000000E+0
PlPatchType	44	2	8	0.00000000000000E+0
0.00000000000000E+0	0.00000000000000E+0			0.00000000000000E+0
PlPatchType	45	2	8	0.00000000000000E+0
0.00000000000000E+0	0.00000000000000E+0			0.00000000000000E+0
PlPatchType	46	2	8	0.00000000000000E+0
0.00000000000000E+0	0.00000000000000E+0			0.00000000000000E+0
PlPatchType	47	2	8	0.00000000000000E+0
0.00000000000000E+0	0.00000000000000E+0			0.00000000000000E+0
PlPatchType	48	2	8	0.00000000000000E+0
0.00000000000000E+0	0.00000000000000E+0			0.00000000000000E+0
PlPatchType	49	2	8	0.00000000000000E+0
0.00000000000000E+0	0.00000000000000E+0			0.00000000000000E+0
PlPatchType	50	2	8	0.00000000000000E+0
0.00000000000000E+0	0.00000000000000E+0			0.00000000000000E+0
PlPatchType	51	2	8	0.00000000000000E+0
0.00000000000000E+0	0.00000000000000E+0			0.00000000000000E+0
PlPatchType	52	2	8	0.00000000000000E+0
0.00000000000000E+0	0.00000000000000E+0			0.00000000000000E+0
PlPatchType	53	2	8	0.00000000000000E+0
0.00000000000000E+0	0.00000000000000E+0			0.00000000000000E+0
PlPatchType	54	2	8	0.00000000000000E+0
0.00000000000000E+0	0.00000000000000E+0			0.00000000000000E+0
PlPatchType	55	2	8	0.00000000000000E+0
0.00000000000000E+0	0.00000000000000E+0			0.00000000000000E+0
PlPatchType	56	2	8	0.00000000000000E+0
0.00000000000000E+0	0.00000000000000E+0			0.00000000000000E+0
PlPatchType	57	2	8	0.00000000000000E+0
0.00000000000000E+0	0.00000000000000E+0			0.00000000000000E+0
PlPatchType	58	2	8	0.00000000000000E+0
0.00000000000000E+0	0.00000000000000E+0			0.00000000000000E+0
PlPatchType	59	2	8	0.00000000000000E+0
0.00000000000000E+0	0.00000000000000E+0			0.00000000000000E+0
PlPatchType	60	2	8	0.00000000000000E+0
0.00000000000000E+0	0.00000000000000E+0			0.00000000000000E+0
PlPatchType	61	2	8	0.00000000000000E+0
0.00000000000000E+0	0.00000000000000E+0			0.00000000000000E+0
PlPatchType	62	2	8	0.00000000000000E+0
0.00000000000000E+0	0.00000000000000E+0			0.00000000000000E+0
PlPatchType	63	2	8	0.00000000000000E+0
0.00000000000000E+0	0.00000000000000E+0			0.00000000000000E+0
PlPatchType	64	2	8	0.00000000000000E+0
0.00000000000000E+0	0.00000000000000E+0			0.00000000000000E+0
PlPatchType	65	2	8	0.00000000000000E+0
0.00000000000000E+0	0.00000000000000E+0			0.00000000000000E+0
PlPatchType	66	2	8	0.00000000000000E+0

0.00000000000000E+0	0.00000000000000E+0			0.00000000000000E+0
PlPatchType	67	2	8	0.00000000000000E+0
0.00000000000000E+0	0.00000000000000E+0			0.00000000000000E+0
PlPatchType	68	2	8	0.00000000000000E+0
0.00000000000000E+0	0.00000000000000E+0			0.00000000000000E+0
PlPatchType	69	2	8	0.00000000000000E+0
0.00000000000000E+0	0.00000000000000E+0			0.00000000000000E+0
PlPatchType	70	2	8	0.00000000000000E+0
0.00000000000000E+0	0.00000000000000E+0			0.00000000000000E+0
PlPatchType	71	2	8	0.00000000000000E+0
0.00000000000000E+0	0.00000000000000E+0			0.00000000000000E+0
PlPatchType	72	2	8	0.00000000000000E+0
0.00000000000000E+0	0.00000000000000E+0			0.00000000000000E+0
PlPatchType	73	2	8	0.00000000000000E+0
0.00000000000000E+0	0.00000000000000E+0			0.00000000000000E+0
PlPatchType	74	2	8	0.00000000000000E+0
0.00000000000000E+0	0.00000000000000E+0			0.00000000000000E+0
PlPatchType	75	2	8	0.00000000000000E+0
0.00000000000000E+0	0.00000000000000E+0			0.00000000000000E+0
PlPatchType	76	2	8	0.00000000000000E+0
0.00000000000000E+0	0.00000000000000E+0			0.00000000000000E+0
PlPatchType	77	2	8	0.00000000000000E+0
0.00000000000000E+0	0.00000000000000E+0			0.00000000000000E+0
PlPatchType	78	2	8	0.00000000000000E+0
0.00000000000000E+0	0.00000000000000E+0			0.00000000000000E+0
PlPatchType	79	2	8	0.00000000000000E+0
0.00000000000000E+0	0.00000000000000E+0			0.00000000000000E+0
PlPatchType	80	2	8	0.00000000000000E+0
0.00000000000000E+0	0.00000000000000E+0			0.00000000000000E+0
PlPatchType	81	2	8	0.00000000000000E+0
0.00000000000000E+0	0.00000000000000E+0			0.00000000000000E+0
PlPatchType	82	2	8	0.00000000000000E+0
0.00000000000000E+0	0.00000000000000E+0			0.00000000000000E+0
PlPatchType	83	2	8	0.00000000000000E+0
0.00000000000000E+0	0.00000000000000E+0			0.00000000000000E+0
PlPatchType	84	2	8	0.00000000000000E+0
0.00000000000000E+0	0.00000000000000E+0			0.00000000000000E+0
PlPatchType	85	2	8	0.00000000000000E+0
0.00000000000000E+0	0.00000000000000E+0			0.00000000000000E+0
PlPatchType	86	2	8	0.00000000000000E+0
0.00000000000000E+0	0.00000000000000E+0			0.00000000000000E+0
PlPatchType	87	2	8	0.00000000000000E+0
0.00000000000000E+0	0.00000000000000E+0			0.00000000000000E+0
PlPatchType	88	2	8	0.00000000000000E+0
0.00000000000000E+0	0.00000000000000E+0			0.00000000000000E+0
PlPatchType	89	2	8	0.00000000000000E+0
0.00000000000000E+0	0.00000000000000E+0			0.00000000000000E+0
PlPatchType	90	2	8	0.00000000000000E+0
0.00000000000000E+0	0.00000000000000E+0			0.00000000000000E+0
PlPatchType	91	2	8	0.00000000000000E+0
0.00000000000000E+0	0.00000000000000E+0			0.00000000000000E+0
PlPatchType	92	2	8	0.00000000000000E+0
0.00000000000000E+0	0.00000000000000E+0			0.00000000000000E+0
PlPatchType	93	2	8	0.00000000000000E+0

0.00000000000000E+0	0.00000000000000E+0			0.00000000000000E+0
PlPatchType	94	2	8	0.00000000000000E+0
0.00000000000000E+0	0.00000000000000E+0			0.00000000000000E+0
PlPatchType	95	2	8	0.00000000000000E+0
0.00000000000000E+0	0.00000000000000E+0			0.00000000000000E+0
PlPatchType	96	2	8	0.00000000000000E+0
0.00000000000000E+0	0.00000000000000E+0			0.00000000000000E+0
PlPatchType	97	2	8	0.00000000000000E+0
0.00000000000000E+0	0.00000000000000E+0			0.00000000000000E+0
PlPatchType	98	2	8	0.00000000000000E+0
0.00000000000000E+0	0.00000000000000E+0			0.00000000000000E+0
PlPatchType	99	2	8	0.00000000000000E+0
0.00000000000000E+0	0.00000000000000E+0			0.00000000000000E+0
PlPatchType	100	2	8	0.00000000000000E+0
0.00000000000000E+0	0.00000000000000E+0			0.00000000000000E+0
PlPatchType	101	2	8	0.00000000000000E+0
0.00000000000000E+0	0.00000000000000E+0			0.00000000000000E+0
PlPatchType	102	2	8	0.00000000000000E+0
0.00000000000000E+0	0.00000000000000E+0			0.00000000000000E+0
PlPatchType	103	2	8	0.00000000000000E+0
0.00000000000000E+0	0.00000000000000E+0			0.00000000000000E+0
PlPatchType	104	2	8	0.00000000000000E+0
0.00000000000000E+0	0.00000000000000E+0			0.00000000000000E+0
PlPatchType	105	2	8	0.00000000000000E+0
0.00000000000000E+0	0.00000000000000E+0			0.00000000000000E+0
PlPatchType	106	2	8	0.00000000000000E+0
0.00000000000000E+0	0.00000000000000E+0			0.00000000000000E+0
PlPatchType	107	2	8	0.00000000000000E+0
0.00000000000000E+0	0.00000000000000E+0			0.00000000000000E+0
PlPatchType	108	2	8	0.00000000000000E+0
0.00000000000000E+0	0.00000000000000E+0			0.00000000000000E+0
PlPatchType	109	2	8	0.00000000000000E+0
0.00000000000000E+0	0.00000000000000E+0			0.00000000000000E+0
PlPatchType	110	2	8	0.00000000000000E+0
0.00000000000000E+0	0.00000000000000E+0			0.00000000000000E+0
PlPatchType	111	2	8	0.00000000000000E+0
0.00000000000000E+0	0.00000000000000E+0			0.00000000000000E+0
PlPatchType	112	2	8	0.00000000000000E+0
0.00000000000000E+0	0.00000000000000E+0			0.00000000000000E+0
PlPatchType	113	5	0	1.00000000000000E+0
0.00000000000000E+0	0.00000000000000E+0			0.00000000000000E+0
PlPatchType	114	5	0	1.00000000000000E+0
0.00000000000000E+0	0.00000000000000E+0			0.00000000000000E+0
PlPatchType	115	5	0	1.00000000000000E+0
0.00000000000000E+0	0.00000000000000E+0			0.00000000000000E+0
PlPatchType	116	5	0	1.00000000000000E+0
0.00000000000000E+0	0.00000000000000E+0			0.00000000000000E+0
PlPatchType	117	5	0	1.00000000000000E+0
0.00000000000000E+0	0.00000000000000E+0			0.00000000000000E+0
PlPatchType	118	5	0	1.00000000000000E+0
0.00000000000000E+0	0.00000000000000E+0			0.00000000000000E+0
PlPatchType	119	5	0	1.00000000000000E+0
0.00000000000000E+0	0.00000000000000E+0			0.00000000000000E+0
PlPatchType	120	5	0	1.00000000000000E+0

0.00000000000000E+0	0.00000000000000E+0			0.00000000000000E+0
PlPatchType	121	5	0	1.00000000000000E+0
0.00000000000000E+0	0.00000000000000E+0			0.00000000000000E+0
PlPatchType	122	5	0	1.00000000000000E+0
0.00000000000000E+0	0.00000000000000E+0			0.00000000000000E+0
PlPatchType	123	5	0	1.00000000000000E+0
0.00000000000000E+0	0.00000000000000E+0			0.00000000000000E+0
PlPatchType	124	5	0	1.00000000000000E+0
0.00000000000000E+0	0.00000000000000E+0			0.00000000000000E+0
PlPatchType	125	5	0	1.00000000000000E+0
0.00000000000000E+0	0.00000000000000E+0			0.00000000000000E+0
PlPatchType	126	5	0	1.00000000000000E+0
0.00000000000000E+0	0.00000000000000E+0			0.00000000000000E+0
PlPatchType	127	5	0	1.00000000000000E+0
0.00000000000000E+0	0.00000000000000E+0			0.00000000000000E+0
PlPatchType	128	5	0	1.00000000000000E+0
0.00000000000000E+0	0.00000000000000E+0			0.00000000000000E+0
PlPatchType	129	5	0	1.00000000000000E+0
0.00000000000000E+0	0.00000000000000E+0			0.00000000000000E+0
PlPatchType	130	5	0	1.00000000000000E+0
0.00000000000000E+0	0.00000000000000E+0			0.00000000000000E+0
PlPatchType	131	5	0	1.00000000000000E+0
0.00000000000000E+0	0.00000000000000E+0			0.00000000000000E+0
PlPatchType	132	5	0	1.00000000000000E+0
0.00000000000000E+0	0.00000000000000E+0			0.00000000000000E+0
PlPatchType	133	5	0	1.00000000000000E+0
0.00000000000000E+0	0.00000000000000E+0			0.00000000000000E+0
PlPatchType	134	5	0	1.00000000000000E+0
0.00000000000000E+0	0.00000000000000E+0			0.00000000000000E+0
PlPatchType	135	5	0	1.00000000000000E+0
0.00000000000000E+0	0.00000000000000E+0			0.00000000000000E+0
PlPatchType	136	5	0	1.00000000000000E+0
0.00000000000000E+0	0.00000000000000E+0			0.00000000000000E+0
PlPatchType	137	5	0	1.00000000000000E+0
0.00000000000000E+0	0.00000000000000E+0			0.00000000000000E+0
PlPatchType	138	5	0	1.00000000000000E+0
0.00000000000000E+0	0.00000000000000E+0			0.00000000000000E+0
PlPatchType	139	5	0	1.00000000000000E+0
0.00000000000000E+0	0.00000000000000E+0			0.00000000000000E+0
PlPatchType	140	5	0	1.00000000000000E+0
0.00000000000000E+0	0.00000000000000E+0			0.00000000000000E+0
PlPatchType	141	5	0	1.00000000000000E+0
0.00000000000000E+0	0.00000000000000E+0			0.00000000000000E+0
PlPatchType	142	5	0	1.00000000000000E+0
0.00000000000000E+0	0.00000000000000E+0			0.00000000000000E+0
PlPatchType	143	5	0	1.00000000000000E+0
0.00000000000000E+0	0.00000000000000E+0			0.00000000000000E+0
PlPatchType	144	5	0	1.00000000000000E+0
0.00000000000000E+0	0.00000000000000E+0			0.00000000000000E+0
PlPatchType	145	5	0	1.00000000000000E+0
0.00000000000000E+0	0.00000000000000E+0			0.00000000000000E+0
PlPatchType	146	5	0	1.00000000000000E+0
0.00000000000000E+0	0.00000000000000E+0			0.00000000000000E+0
PlPatchType	147	5	0	1.00000000000000E+0

0.00000000000000E+0	0.00000000000000E+0			0.00000000000000E+0
PlPatchType	148	5	0	1.00000000000000E+0
0.00000000000000E+0	0.00000000000000E+0			0.00000000000000E+0
PlPatchType	149	5	0	1.00000000000000E+0
0.00000000000000E+0	0.00000000000000E+0			0.00000000000000E+0
PlPatchType	150	5	0	1.00000000000000E+0
0.00000000000000E+0	0.00000000000000E+0			0.00000000000000E+0
PlPatchType	151	5	0	1.00000000000000E+0
0.00000000000000E+0	0.00000000000000E+0			0.00000000000000E+0
PlPatchType	152	5	0	1.00000000000000E+0
0.00000000000000E+0	0.00000000000000E+0			0.00000000000000E+0
PlPatchType	153	5	0	1.00000000000000E+0
0.00000000000000E+0	0.00000000000000E+0			0.00000000000000E+0
PlPatchType	154	5	0	1.00000000000000E+0
0.00000000000000E+0	0.00000000000000E+0			0.00000000000000E+0
PlPatchType	155	5	0	1.00000000000000E+0
0.00000000000000E+0	0.00000000000000E+0			0.00000000000000E+0
PlPatchType	156	5	0	1.00000000000000E+0
0.00000000000000E+0	0.00000000000000E+0			0.00000000000000E+0
PlPatchType	157	5	0	1.00000000000000E+0
0.00000000000000E+0	0.00000000000000E+0			0.00000000000000E+0
PlPatchType	158	5	0	1.00000000000000E+0
0.00000000000000E+0	0.00000000000000E+0			0.00000000000000E+0
PlPatchType	159	5	0	1.00000000000000E+0
0.00000000000000E+0	0.00000000000000E+0			0.00000000000000E+0
PlPatchType	160	5	0	1.00000000000000E+0
0.00000000000000E+0	0.00000000000000E+0			0.00000000000000E+0
PlPatchType	161	5	0	1.00000000000000E+0
0.00000000000000E+0	0.00000000000000E+0			0.00000000000000E+0
PlPatchType	162	5	0	1.00000000000000E+0
0.00000000000000E+0	0.00000000000000E+0			0.00000000000000E+0
PlPatchType	163	5	0	1.00000000000000E+0
0.00000000000000E+0	0.00000000000000E+0			0.00000000000000E+0
PlPatchType	164	5	0	1.00000000000000E+0
0.00000000000000E+0	0.00000000000000E+0			0.00000000000000E+0
PlPatchType	165	5	0	1.00000000000000E+0
0.00000000000000E+0	0.00000000000000E+0			0.00000000000000E+0
PlPatchType	166	5	0	1.00000000000000E+0
0.00000000000000E+0	0.00000000000000E+0			0.00000000000000E+0
PlPatchType	167	5	0	1.00000000000000E+0
0.00000000000000E+0	0.00000000000000E+0			0.00000000000000E+0
PlPatchType	168	5	0	1.00000000000000E+0
0.00000000000000E+0	0.00000000000000E+0			0.00000000000000E+0
PlPatchType	169	5	0	0.00000000000000E+0
0.00000000000000E+0	1.00000000000000E+0			0.00000000000000E+0
PlPatchType	170	5	0	0.00000000000000E+0
0.00000000000000E+0	1.00000000000000E+0			0.00000000000000E+0
PlPatchType	171	5	0	0.00000000000000E+0
0.00000000000000E+0	1.00000000000000E+0			0.00000000000000E+0
PlPatchType	172	5	0	0.00000000000000E+0
0.00000000000000E+0	1.00000000000000E+0			0.00000000000000E+0
PlPatchType	173	5	0	0.00000000000000E+0
0.00000000000000E+0	1.00000000000000E+0			0.00000000000000E+0
PlPatchType	174	5	0	0.00000000000000E+0

0.00000000000000E+0	1.00000000000000E+0			0.00000000000000E+0
PlPatchType	175	5	0	0.00000000000000E+0
0.00000000000000E+0	1.00000000000000E+0			0.00000000000000E+0
PlPatchType	176	5	0	0.00000000000000E+0
0.00000000000000E+0	1.00000000000000E+0			0.00000000000000E+0
PlPatchType	177	5	0	0.00000000000000E+0
0.00000000000000E+0	1.00000000000000E+0			0.00000000000000E+0
PlPatchType	178	5	0	0.00000000000000E+0
0.00000000000000E+0	1.00000000000000E+0			0.00000000000000E+0
PlPatchType	179	5	0	0.00000000000000E+0
0.00000000000000E+0	1.00000000000000E+0			0.00000000000000E+0
PlPatchType	180	5	0	0.00000000000000E+0
0.00000000000000E+0	1.00000000000000E+0			0.00000000000000E+0
PlPatchType	181	5	0	0.00000000000000E+0
0.00000000000000E+0	1.00000000000000E+0			0.00000000000000E+0
PlPatchType	182	5	0	0.00000000000000E+0
0.00000000000000E+0	1.00000000000000E+0			0.00000000000000E+0
PlPatchType	183	5	0	0.00000000000000E+0
0.00000000000000E+0	1.00000000000000E+0			0.00000000000000E+0
PlPatchType	184	5	0	0.00000000000000E+0
0.00000000000000E+0	1.00000000000000E+0			0.00000000000000E+0
PlPatchType	185	5	0	0.00000000000000E+0
0.00000000000000E+0	1.00000000000000E+0			0.00000000000000E+0
PlPatchType	186	5	0	0.00000000000000E+0
0.00000000000000E+0	1.00000000000000E+0			0.00000000000000E+0
PlPatchType	187	5	0	0.00000000000000E+0
0.00000000000000E+0	1.00000000000000E+0			0.00000000000000E+0
PlPatchType	188	5	0	0.00000000000000E+0
0.00000000000000E+0	1.00000000000000E+0			0.00000000000000E+0
PlPatchType	189	5	0	0.00000000000000E+0
0.00000000000000E+0	1.00000000000000E+0			0.00000000000000E+0
PlPatchType	190	5	0	0.00000000000000E+0
0.00000000000000E+0	1.00000000000000E+0			0.00000000000000E+0
PlPatchType	191	5	0	0.00000000000000E+0
0.00000000000000E+0	1.00000000000000E+0			0.00000000000000E+0
PlPatchType	192	5	0	0.00000000000000E+0
0.00000000000000E+0	1.00000000000000E+0			0.00000000000000E+0
PlPatchType	193	5	0	0.00000000000000E+0
0.00000000000000E+0	1.00000000000000E+0			0.00000000000000E+0
PlPatchType	194	5	0	0.00000000000000E+0
0.00000000000000E+0	1.00000000000000E+0			0.00000000000000E+0
PlPatchType	195	5	0	0.00000000000000E+0
0.00000000000000E+0	1.00000000000000E+0			0.00000000000000E+0
PlPatchType	196	5	0	0.00000000000000E+0
0.00000000000000E+0	1.00000000000000E+0			0.00000000000000E+0
PlPatchType	197	5	0	0.00000000000000E+0
0.00000000000000E+0	1.00000000000000E+0			0.00000000000000E+0
PlPatchType	198	5	0	0.00000000000000E+0
0.00000000000000E+0	1.00000000000000E+0			0.00000000000000E+0
PlPatchType	199	5	0	0.00000000000000E+0
0.00000000000000E+0	1.00000000000000E+0			0.00000000000000E+0
PlPatchType	200	5	0	0.00000000000000E+0
0.00000000000000E+0	1.00000000000000E+0			0.00000000000000E+0
PlPatchType	201	5	0	0.00000000000000E+0

0.00000000000000E+0	1.00000000000000E+0			0.00000000000000E+0
PlPatchType	202	5	0	0.00000000000000E+0
0.00000000000000E+0	1.00000000000000E+0			0.00000000000000E+0
PlPatchType	203	5	0	0.00000000000000E+0
0.00000000000000E+0	1.00000000000000E+0			0.00000000000000E+0
PlPatchType	204	5	0	0.00000000000000E+0
0.00000000000000E+0	1.00000000000000E+0			0.00000000000000E+0
PlPatchType	205	5	0	0.00000000000000E+0
0.00000000000000E+0	1.00000000000000E+0			0.00000000000000E+0
PlPatchType	206	5	0	0.00000000000000E+0
0.00000000000000E+0	1.00000000000000E+0			0.00000000000000E+0
PlPatchType	207	5	0	0.00000000000000E+0
0.00000000000000E+0	1.00000000000000E+0			0.00000000000000E+0
PlPatchType	208	5	0	0.00000000000000E+0
0.00000000000000E+0	1.00000000000000E+0			0.00000000000000E+0
PlPatchType	209	5	0	0.00000000000000E+0
0.00000000000000E+0	1.00000000000000E+0			0.00000000000000E+0
PlPatchType	210	5	0	0.00000000000000E+0
0.00000000000000E+0	1.00000000000000E+0			0.00000000000000E+0
PlPatchType	211	5	0	0.00000000000000E+0
0.00000000000000E+0	1.00000000000000E+0			0.00000000000000E+0
PlPatchType	212	5	0	0.00000000000000E+0
0.00000000000000E+0	1.00000000000000E+0			0.00000000000000E+0
PlPatchType	213	5	0	0.00000000000000E+0
0.00000000000000E+0	1.00000000000000E+0			0.00000000000000E+0
PlPatchType	214	5	0	0.00000000000000E+0
0.00000000000000E+0	1.00000000000000E+0			0.00000000000000E+0
PlPatchType	215	5	0	0.00000000000000E+0
0.00000000000000E+0	1.00000000000000E+0			0.00000000000000E+0
PlPatchType	216	5	0	0.00000000000000E+0
0.00000000000000E+0	1.00000000000000E+0			0.00000000000000E+0
PlPatchType	217	5	0	0.00000000000000E+0
0.00000000000000E+0	1.00000000000000E+0			0.00000000000000E+0
PlPatchType	218	5	0	0.00000000000000E+0
0.00000000000000E+0	1.00000000000000E+0			0.00000000000000E+0
PlPatchType	219	5	0	0.00000000000000E+0
0.00000000000000E+0	1.00000000000000E+0			0.00000000000000E+0
PlPatchType	220	5	0	0.00000000000000E+0
0.00000000000000E+0	1.00000000000000E+0			0.00000000000000E+0
PlPatchType	221	5	0	0.00000000000000E+0
0.00000000000000E+0	1.00000000000000E+0			0.00000000000000E+0
PlPatchType	222	5	0	0.00000000000000E+0
0.00000000000000E+0	1.00000000000000E+0			0.00000000000000E+0
PlPatchType	223	5	0	0.00000000000000E+0
0.00000000000000E+0	1.00000000000000E+0			0.00000000000000E+0
PlPatchType	224	5	0	0.00000000000000E+0
0.00000000000000E+0	1.00000000000000E+0			0.00000000000000E+0
PlPatchType	225	5	0	1.00000000000000E+0
0.00000000000000E+0	0.00000000000000E+0			0.00000000000000E+0
PlPatchType	226	5	0	1.00000000000000E+0
0.00000000000000E+0	0.00000000000000E+0			0.00000000000000E+0
PlPatchType	227	5	0	1.00000000000000E+0
0.00000000000000E+0	0.00000000000000E+0			0.00000000000000E+0
PlPatchType	228	5	0	1.00000000000000E+0

0.00000000000000E+0	0.00000000000000E+0			0.00000000000000E+0
PlPatchType	229	5	0	1.00000000000000E+0
0.00000000000000E+0	0.00000000000000E+0			0.00000000000000E+0
PlPatchType	230	5	0	1.00000000000000E+0
0.00000000000000E+0	0.00000000000000E+0			0.00000000000000E+0
PlPatchType	231	5	0	1.00000000000000E+0
0.00000000000000E+0	0.00000000000000E+0			0.00000000000000E+0
PlPatchType	232	5	0	1.00000000000000E+0
0.00000000000000E+0	0.00000000000000E+0			0.00000000000000E+0
PlPatchType	233	5	0	1.00000000000000E+0
0.00000000000000E+0	0.00000000000000E+0			0.00000000000000E+0
PlPatchType	234	5	0	1.00000000000000E+0
0.00000000000000E+0	0.00000000000000E+0			0.00000000000000E+0
PlPatchType	235	5	0	1.00000000000000E+0
0.00000000000000E+0	0.00000000000000E+0			0.00000000000000E+0
PlPatchType	236	5	0	1.00000000000000E+0
0.00000000000000E+0	0.00000000000000E+0			0.00000000000000E+0
PlPatchType	237	5	0	1.00000000000000E+0
0.00000000000000E+0	0.00000000000000E+0			0.00000000000000E+0
PlPatchType	238	5	0	1.00000000000000E+0
0.00000000000000E+0	0.00000000000000E+0			0.00000000000000E+0
PlPatchType	239	5	0	1.00000000000000E+0
0.00000000000000E+0	0.00000000000000E+0			0.00000000000000E+0
PlPatchType	240	5	0	1.00000000000000E+0
0.00000000000000E+0	0.00000000000000E+0			0.00000000000000E+0
PlPatchType	241	5	0	1.00000000000000E+0
0.00000000000000E+0	0.00000000000000E+0			0.00000000000000E+0
PlPatchType	242	5	0	1.00000000000000E+0
0.00000000000000E+0	0.00000000000000E+0			0.00000000000000E+0
PlPatchType	243	5	0	1.00000000000000E+0
0.00000000000000E+0	0.00000000000000E+0			0.00000000000000E+0
PlPatchType	244	5	0	1.00000000000000E+0
0.00000000000000E+0	0.00000000000000E+0			0.00000000000000E+0
PlPatchType	245	5	0	1.00000000000000E+0
0.00000000000000E+0	0.00000000000000E+0			0.00000000000000E+0
PlPatchType	246	5	0	1.00000000000000E+0
0.00000000000000E+0	0.00000000000000E+0			0.00000000000000E+0
PlPatchType	247	5	0	1.00000000000000E+0
0.00000000000000E+0	0.00000000000000E+0			0.00000000000000E+0
PlPatchType	248	5	0	1.00000000000000E+0
0.00000000000000E+0	0.00000000000000E+0			0.00000000000000E+0
PlPatchType	249	5	0	1.00000000000000E+0
0.00000000000000E+0	0.00000000000000E+0			0.00000000000000E+0
PlPatchType	250	5	0	1.00000000000000E+0
0.00000000000000E+0	0.00000000000000E+0			0.00000000000000E+0
PlPatchType	251	5	0	1.00000000000000E+0
0.00000000000000E+0	0.00000000000000E+0			0.00000000000000E+0
PlPatchType	252	5	0	1.00000000000000E+0
0.00000000000000E+0	0.00000000000000E+0			0.00000000000000E+0
PlPatchType	253	5	0	1.00000000000000E+0
0.00000000000000E+0	0.00000000000000E+0			0.00000000000000E+0
PlPatchType	254	5	0	1.00000000000000E+0
0.00000000000000E+0	0.00000000000000E+0			0.00000000000000E+0
PlPatchType	255	5	0	1.00000000000000E+0

0.00000000000000E+0	0.00000000000000E+0			0.00000000000000E+0
PlPatchType	256	5	0	1.00000000000000E+0
0.00000000000000E+0	0.00000000000000E+0			0.00000000000000E+0
PlPatchType	257	5	0	1.00000000000000E+0
0.00000000000000E+0	0.00000000000000E+0			0.00000000000000E+0
PlPatchType	258	5	0	1.00000000000000E+0
0.00000000000000E+0	0.00000000000000E+0			0.00000000000000E+0
PlPatchType	259	5	0	1.00000000000000E+0
0.00000000000000E+0	0.00000000000000E+0			0.00000000000000E+0
PlPatchType	260	5	0	1.00000000000000E+0
0.00000000000000E+0	0.00000000000000E+0			0.00000000000000E+0
PlPatchType	261	5	0	1.00000000000000E+0
0.00000000000000E+0	0.00000000000000E+0			0.00000000000000E+0
PlPatchType	262	5	0	1.00000000000000E+0
0.00000000000000E+0	0.00000000000000E+0			0.00000000000000E+0
PlPatchType	263	5	0	1.00000000000000E+0
0.00000000000000E+0	0.00000000000000E+0			0.00000000000000E+0
PlPatchType	264	5	0	1.00000000000000E+0
0.00000000000000E+0	0.00000000000000E+0			0.00000000000000E+0
PlPatchType	265	5	0	1.00000000000000E+0
0.00000000000000E+0	0.00000000000000E+0			0.00000000000000E+0
PlPatchType	266	5	0	1.00000000000000E+0
0.00000000000000E+0	0.00000000000000E+0			0.00000000000000E+0
PlPatchType	267	5	0	1.00000000000000E+0
0.00000000000000E+0	0.00000000000000E+0			0.00000000000000E+0
PlPatchType	268	5	0	1.00000000000000E+0
0.00000000000000E+0	0.00000000000000E+0			0.00000000000000E+0
PlPatchType	269	5	0	1.00000000000000E+0
0.00000000000000E+0	0.00000000000000E+0			0.00000000000000E+0
PlPatchType	270	5	0	1.00000000000000E+0
0.00000000000000E+0	0.00000000000000E+0			0.00000000000000E+0
PlPatchType	271	5	0	1.00000000000000E+0
0.00000000000000E+0	0.00000000000000E+0			0.00000000000000E+0
PlPatchType	272	5	0	1.00000000000000E+0
0.00000000000000E+0	0.00000000000000E+0			0.00000000000000E+0
PlPatchType	273	5	0	1.00000000000000E+0
0.00000000000000E+0	0.00000000000000E+0			0.00000000000000E+0
PlPatchType	274	5	0	1.00000000000000E+0
0.00000000000000E+0	0.00000000000000E+0			0.00000000000000E+0
PlPatchType	275	5	0	1.00000000000000E+0
0.00000000000000E+0	0.00000000000000E+0			0.00000000000000E+0
PlPatchType	276	5	0	1.00000000000000E+0
0.00000000000000E+0	0.00000000000000E+0			0.00000000000000E+0
PlPatchType	277	5	0	1.00000000000000E+0
0.00000000000000E+0	0.00000000000000E+0			0.00000000000000E+0
PlPatchType	278	5	0	1.00000000000000E+0
0.00000000000000E+0	0.00000000000000E+0			0.00000000000000E+0
PlPatchType	279	5	0	1.00000000000000E+0
0.00000000000000E+0	0.00000000000000E+0			0.00000000000000E+0
PlPatchType	280	5	0	1.00000000000000E+0
0.00000000000000E+0	0.00000000000000E+0			0.00000000000000E+0
PlPatchType	281	5	0	0.00000000000000E+0
0.00000000000000E+0	1.00000000000000E+0			0.00000000000000E+0
PlPatchType	282	5	0	0.00000000000000E+0

0.00000000000000E+0	1.00000000000000E+0			0.00000000000000E+0
PlPatchType	283	5	0	0.00000000000000E+0
0.00000000000000E+0	1.00000000000000E+0			0.00000000000000E+0
PlPatchType	284	5	0	0.00000000000000E+0
0.00000000000000E+0	1.00000000000000E+0			0.00000000000000E+0
PlPatchType	285	5	0	0.00000000000000E+0
0.00000000000000E+0	1.00000000000000E+0			0.00000000000000E+0
PlPatchType	286	5	0	0.00000000000000E+0
0.00000000000000E+0	1.00000000000000E+0			0.00000000000000E+0
PlPatchType	287	5	0	0.00000000000000E+0
0.00000000000000E+0	1.00000000000000E+0			0.00000000000000E+0
PlPatchType	288	5	0	0.00000000000000E+0
0.00000000000000E+0	1.00000000000000E+0			0.00000000000000E+0
PlPatchType	289	5	0	0.00000000000000E+0
0.00000000000000E+0	1.00000000000000E+0			0.00000000000000E+0
PlPatchType	290	5	0	0.00000000000000E+0
0.00000000000000E+0	1.00000000000000E+0			0.00000000000000E+0
PlPatchType	291	5	0	0.00000000000000E+0
0.00000000000000E+0	1.00000000000000E+0			0.00000000000000E+0
PlPatchType	292	5	0	0.00000000000000E+0
0.00000000000000E+0	1.00000000000000E+0			0.00000000000000E+0
PlPatchType	293	5	0	0.00000000000000E+0
0.00000000000000E+0	1.00000000000000E+0			0.00000000000000E+0
PlPatchType	294	5	0	0.00000000000000E+0
0.00000000000000E+0	1.00000000000000E+0			0.00000000000000E+0
PlPatchType	295	5	0	0.00000000000000E+0
0.00000000000000E+0	1.00000000000000E+0			0.00000000000000E+0
PlPatchType	296	5	0	0.00000000000000E+0
0.00000000000000E+0	1.00000000000000E+0			0.00000000000000E+0
PlPatchType	297	5	0	0.00000000000000E+0
0.00000000000000E+0	1.00000000000000E+0			0.00000000000000E+0
PlPatchType	298	5	0	0.00000000000000E+0
0.00000000000000E+0	1.00000000000000E+0			0.00000000000000E+0
PlPatchType	299	5	0	0.00000000000000E+0
0.00000000000000E+0	1.00000000000000E+0			0.00000000000000E+0
PlPatchType	300	5	0	0.00000000000000E+0
0.00000000000000E+0	1.00000000000000E+0			0.00000000000000E+0
PlPatchType	301	5	0	0.00000000000000E+0
0.00000000000000E+0	1.00000000000000E+0			0.00000000000000E+0
PlPatchType	302	5	0	0.00000000000000E+0
0.00000000000000E+0	1.00000000000000E+0			0.00000000000000E+0
PlPatchType	303	5	0	0.00000000000000E+0
0.00000000000000E+0	1.00000000000000E+0			0.00000000000000E+0
PlPatchType	304	5	0	0.00000000000000E+0
0.00000000000000E+0	1.00000000000000E+0			0.00000000000000E+0
PlPatchType	305	5	0	0.00000000000000E+0
0.00000000000000E+0	1.00000000000000E+0			0.00000000000000E+0
PlPatchType	306	5	0	0.00000000000000E+0
0.00000000000000E+0	1.00000000000000E+0			0.00000000000000E+0
PlPatchType	307	5	0	0.00000000000000E+0
0.00000000000000E+0	1.00000000000000E+0			0.00000000000000E+0
PlPatchType	308	5	0	0.00000000000000E+0
0.00000000000000E+0	1.00000000000000E+0			0.00000000000000E+0
PlPatchType	309	5	0	0.00000000000000E+0

0.00000000000000E+0	1.00000000000000E+0			0.00000000000000E+0
PlPatchType	310	5	0	0.00000000000000E+0
0.00000000000000E+0	1.00000000000000E+0			0.00000000000000E+0
PlPatchType	311	5	0	0.00000000000000E+0
0.00000000000000E+0	1.00000000000000E+0			0.00000000000000E+0
PlPatchType	312	5	0	0.00000000000000E+0
0.00000000000000E+0	1.00000000000000E+0			0.00000000000000E+0
PlPatchType	313	5	0	0.00000000000000E+0
0.00000000000000E+0	1.00000000000000E+0			0.00000000000000E+0
PlPatchType	314	5	0	0.00000000000000E+0
0.00000000000000E+0	1.00000000000000E+0			0.00000000000000E+0
PlPatchType	315	5	0	0.00000000000000E+0
0.00000000000000E+0	1.00000000000000E+0			0.00000000000000E+0
PlPatchType	316	5	0	0.00000000000000E+0
0.00000000000000E+0	1.00000000000000E+0			0.00000000000000E+0
PlPatchType	317	5	0	0.00000000000000E+0
0.00000000000000E+0	1.00000000000000E+0			0.00000000000000E+0
PlPatchType	318	5	0	0.00000000000000E+0
0.00000000000000E+0	1.00000000000000E+0			0.00000000000000E+0
PlPatchType	319	5	0	0.00000000000000E+0
0.00000000000000E+0	1.00000000000000E+0			0.00000000000000E+0
PlPatchType	320	5	0	0.00000000000000E+0
0.00000000000000E+0	1.00000000000000E+0			0.00000000000000E+0
PlPatchType	321	5	0	0.00000000000000E+0
0.00000000000000E+0	1.00000000000000E+0			0.00000000000000E+0
PlPatchType	322	5	0	0.00000000000000E+0
0.00000000000000E+0	1.00000000000000E+0			0.00000000000000E+0
PlPatchType	323	5	0	0.00000000000000E+0
0.00000000000000E+0	1.00000000000000E+0			0.00000000000000E+0
PlPatchType	324	5	0	0.00000000000000E+0
0.00000000000000E+0	1.00000000000000E+0			0.00000000000000E+0
PlPatchType	325	5	0	0.00000000000000E+0
0.00000000000000E+0	1.00000000000000E+0			0.00000000000000E+0
PlPatchType	326	5	0	0.00000000000000E+0
0.00000000000000E+0	1.00000000000000E+0			0.00000000000000E+0
PlPatchType	327	5	0	0.00000000000000E+0
0.00000000000000E+0	1.00000000000000E+0			0.00000000000000E+0
PlPatchType	328	5	0	0.00000000000000E+0
0.00000000000000E+0	1.00000000000000E+0			0.00000000000000E+0
PlPatchType	329	5	0	0.00000000000000E+0
0.00000000000000E+0	1.00000000000000E+0			0.00000000000000E+0
PlPatchType	330	5	0	0.00000000000000E+0
0.00000000000000E+0	1.00000000000000E+0			0.00000000000000E+0
PlPatchType	331	5	0	0.00000000000000E+0
0.00000000000000E+0	1.00000000000000E+0			0.00000000000000E+0
PlPatchType	332	5	0	0.00000000000000E+0
0.00000000000000E+0	1.00000000000000E+0			0.00000000000000E+0
PlPatchType	333	5	0	0.00000000000000E+0
0.00000000000000E+0	1.00000000000000E+0			0.00000000000000E+0
PlPatchType	334	5	0	0.00000000000000E+0
0.00000000000000E+0	1.00000000000000E+0			0.00000000000000E+0
PlPatchType	335	5	0	0.00000000000000E+0
0.00000000000000E+0	1.00000000000000E+0			0.00000000000000E+0
PlPatchType	336	5	0	0.00000000000000E+0

```
0.00000000000000E+0      1.00000000000000E+0      0.00000000000000E+0

/ ____________________________________________________________________
/ RIGID LINKS

   RigidLink                12       1      31       1          XYZ
   RigidLink                12       2      36       1          XYZ
   RigidLink                12       3      41       1          XYZ
   RigidLink                12       4      46       1          XYZ
   RigidLink                12       5      51       1          XYZ
   RigidLink                12       6      56       1          XYZ
   RigidLink                12       7      61       1          XYZ
   RigidLink                12       8      66       1          XYZ
   RigidLink                12       9      71       1          XYZ
   RigidLink                12      10      76       1          XYZ
   RigidLink                12     399     466       1          XYZ
   RigidLink                12     404     471       1          XYZ
   RigidLink                12     406     476       1          XYZ
   RigidLink                12     408     481       1          XYZ
   RigidLink                12     410     486       1          XYZ
   RigidLink                12     412     491       1          XYZ
   RigidLink                12     416     496       1          XYZ
   RigidLink                12     418     501       1          XYZ
   RigidLink                12     420     506       1          XYZ
   RigidLink                12     401     521       1          XYZ
   RigidLink                19       1    1047       1          XYZ
   RigidLink                19      10    1048       1          XYZ
   RigidLink                19     399    1049       1          XYZ
   RigidLink                19     420    1050       1          XYZ
   RigidLink                19     545    1051       1          XYZ
   RigidLink                19     566    1052       1          XYZ
   RigidLink                19     603    1053       1          XYZ
   RigidLink                19     657    1054       1          XYZ
   RigidLink                21    1063    1058       1          XYZ
   RigidLink                21    1063    1062       1          XYZ
   RigidLink                21    1064    1056       1          XYZ
   RigidLink                21    1064    1060       1          XYZ
   RigidLink                21    1065    1057       1          XYZ
   RigidLink                21    1065    1061       1          XYZ
   RigidLink                21    1066    1055       1          XYZ
   RigidLink                21    1066    1059       1          XYZ

/ ____________________________________________________________________
/ NODE RESTRAINTS (ROTATION AS RADIAN)
/ -
   NdFreedom                 1    1067       1       DX  DY  DZ  RX  RY  RZ
   NdFreedom                 1    1068       1       DX  DY  DZ  RX  RY  RZ
   NdFreedom                 1    1069       1       DX  DY  DZ  RX  RY  RZ
   NdFreedom                 1    1070       1       DX  DY  DZ  RX  RY  RZ

/ ____________________________________________________________________
/ PLATE NON-STRUCTURAL MASSES
/ G01 - Carico Permanente soletta
   PlNSMass                  2       1     3.75000000000000E+2
```

1.00000000000000E+0 0.00000000000000E+0 0.00000000000000E+0
0.00000000000000E+0
PlNSMass 2 2 3.75000000000000E+2
1.00000000000000E+0 0.00000000000000E+0 0.00000000000000E+0
0.00000000000000E+0
PlNSMass 2 3 3.75000000000000E+2
1.00000000000000E+0 0.00000000000000E+0 0.00000000000000E+0
0.00000000000000E+0
PlNSMass 2 4 3.75000000000000E+2
1.00000000000000E+0 0.00000000000000E+0 0.00000000000000E+0
0.00000000000000E+0
PlNSMass 2 5 3.75000000000000E+2
1.00000000000000E+0 0.00000000000000E+0 0.00000000000000E+0
0.00000000000000E+0
PlNSMass 2 6 3.75000000000000E+2
1.00000000000000E+0 0.00000000000000E+0 0.00000000000000E+0
0.00000000000000E+0
PlNSMass 2 7 3.75000000000000E+2
1.00000000000000E+0 0.00000000000000E+0 0.00000000000000E+0
0.00000000000000E+0
PlNSMass 2 8 3.75000000000000E+2
1.00000000000000E+0 0.00000000000000E+0 0.00000000000000E+0
0.00000000000000E+0
PlNSMass 2 9 3.75000000000000E+2
1.00000000000000E+0 0.00000000000000E+0 0.00000000000000E+0
0.00000000000000E+0
PlNSMass 2 10 3.75000000000000E+2
1.00000000000000E+0 0.00000000000000E+0 0.00000000000000E+0
0.00000000000000E+0
PlNSMass 2 11 3.75000000000000E+2
1.00000000000000E+0 0.00000000000000E+0 0.00000000000000E+0
0.00000000000000E+0
PlNSMass 2 12 3.75000000000000E+2
1.00000000000000E+0 0.00000000000000E+0 0.00000000000000E+0
0.00000000000000E+0
PlNSMass 2 13 3.75000000000000E+2
1.00000000000000E+0 0.00000000000000E+0 0.00000000000000E+0
0.00000000000000E+0
PlNSMass 2 14 3.75000000000000E+2
1.00000000000000E+0 0.00000000000000E+0 0.00000000000000E+0
0.00000000000000E+0
PlNSMass 2 15 3.75000000000000E+2
1.00000000000000E+0 0.00000000000000E+0 0.00000000000000E+0
0.00000000000000E+0
PlNSMass 2 16 3.75000000000000E+2
1.00000000000000E+0 0.00000000000000E+0 0.00000000000000E+0
0.00000000000000E+0
PlNSMass 2 17 3.75000000000000E+2
1.00000000000000E+0 0.00000000000000E+0 0.00000000000000E+0
0.00000000000000E+0
PlNSMass 2 18 3.75000000000000E+2
1.00000000000000E+0 0.00000000000000E+0 0.00000000000000E+0
0.00000000000000E+0
PlNSMass 2 19 3.75000000000000E+2

1.00000000000000E+0 0.00000000000000E+0 0.00000000000000E+0
0.00000000000000E+0
PlNSMass 2 20 3.75000000000000E+2
1.00000000000000E+0 0.00000000000000E+0 0.00000000000000E+0
0.00000000000000E+0
PlNSMass 2 21 3.75000000000000E+2
1.00000000000000E+0 0.00000000000000E+0 0.00000000000000E+0
0.00000000000000E+0
PlNSMass 2 22 3.75000000000000E+2
1.00000000000000E+0 0.00000000000000E+0 0.00000000000000E+0
0.00000000000000E+0
PlNSMass 2 23 3.75000000000000E+2
1.00000000000000E+0 0.00000000000000E+0 0.00000000000000E+0
0.00000000000000E+0
PlNSMass 2 24 3.75000000000000E+2
1.00000000000000E+0 0.00000000000000E+0 0.00000000000000E+0
0.00000000000000E+0
PlNSMass 2 25 3.75000000000000E+2
1.00000000000000E+0 0.00000000000000E+0 0.00000000000000E+0
0.00000000000000E+0
PlNSMass 2 26 3.75000000000000E+2
1.00000000000000E+0 0.00000000000000E+0 0.00000000000000E+0
0.00000000000000E+0
PlNSMass 2 27 3.75000000000000E+2
1.00000000000000E+0 0.00000000000000E+0 0.00000000000000E+0
0.00000000000000E+0
PlNSMass 2 28 3.75000000000000E+2
1.00000000000000E+0 0.00000000000000E+0 0.00000000000000E+0
0.00000000000000E+0
PlNSMass 2 29 3.75000000000000E+2
1.00000000000000E+0 0.00000000000000E+0 0.00000000000000E+0
0.00000000000000E+0
PlNSMass 2 30 3.75000000000000E+2
1.00000000000000E+0 0.00000000000000E+0 0.00000000000000E+0
0.00000000000000E+0
PlNSMass 2 31 3.75000000000000E+2
1.00000000000000E+0 0.00000000000000E+0 0.00000000000000E+0
0.00000000000000E+0
PlNSMass 2 32 3.75000000000000E+2
1.00000000000000E+0 0.00000000000000E+0 0.00000000000000E+0
0.00000000000000E+0
PlNSMass 2 33 3.75000000000000E+2
1.00000000000000E+0 0.00000000000000E+0 0.00000000000000E+0
0.00000000000000E+0
PlNSMass 2 34 3.75000000000000E+2
1.00000000000000E+0 0.00000000000000E+0 0.00000000000000E+0
0.00000000000000E+0
PlNSMass 2 35 3.75000000000000E+2
1.00000000000000E+0 0.00000000000000E+0 0.00000000000000E+0
0.00000000000000E+0
PlNSMass 2 36 3.75000000000000E+2
1.00000000000000E+0 0.00000000000000E+0 0.00000000000000E+0
0.00000000000000E+0
PlNSMass 2 37 3.75000000000000E+2

1.00000000000000E+0 0.00000000000000E+0 0.00000000000000E+0
0.00000000000000E+0
PlNSMass 2 38 3.75000000000000E+2
1.00000000000000E+0 0.00000000000000E+0 0.00000000000000E+0
0.00000000000000E+0
PlNSMass 2 39 3.75000000000000E+2
1.00000000000000E+0 0.00000000000000E+0 0.00000000000000E+0
0.00000000000000E+0
PlNSMass 2 40 3.75000000000000E+2
1.00000000000000E+0 0.00000000000000E+0 0.00000000000000E+0
0.00000000000000E+0
PlNSMass 2 41 3.75000000000000E+2
1.00000000000000E+0 0.00000000000000E+0 0.00000000000000E+0
0.00000000000000E+0
PlNSMass 2 42 3.75000000000000E+2
1.00000000000000E+0 0.00000000000000E+0 0.00000000000000E+0
0.00000000000000E+0
PlNSMass 2 43 3.75000000000000E+2
1.00000000000000E+0 0.00000000000000E+0 0.00000000000000E+0
0.00000000000000E+0
PlNSMass 2 44 3.75000000000000E+2
1.00000000000000E+0 0.00000000000000E+0 0.00000000000000E+0
0.00000000000000E+0
PlNSMass 2 45 3.75000000000000E+2
1.00000000000000E+0 0.00000000000000E+0 0.00000000000000E+0
0.00000000000000E+0
PlNSMass 2 46 3.75000000000000E+2
1.00000000000000E+0 0.00000000000000E+0 0.00000000000000E+0
0.00000000000000E+0
PlNSMass 2 47 3.75000000000000E+2
1.00000000000000E+0 0.00000000000000E+0 0.00000000000000E+0
0.00000000000000E+0
PlNSMass 2 48 3.75000000000000E+2
1.00000000000000E+0 0.00000000000000E+0 0.00000000000000E+0
0.00000000000000E+0
PlNSMass 2 49 3.75000000000000E+2
1.00000000000000E+0 0.00000000000000E+0 0.00000000000000E+0
0.00000000000000E+0
PlNSMass 2 50 3.75000000000000E+2
1.00000000000000E+0 0.00000000000000E+0 0.00000000000000E+0
0.00000000000000E+0
PlNSMass 2 51 3.75000000000000E+2
1.00000000000000E+0 0.00000000000000E+0 0.00000000000000E+0
0.00000000000000E+0
PlNSMass 2 52 3.75000000000000E+2
1.00000000000000E+0 0.00000000000000E+0 0.00000000000000E+0
0.00000000000000E+0
PlNSMass 2 53 3.75000000000000E+2
1.00000000000000E+0 0.00000000000000E+0 0.00000000000000E+0
0.00000000000000E+0
PlNSMass 2 54 3.75000000000000E+2
1.00000000000000E+0 0.00000000000000E+0 0.00000000000000E+0
0.00000000000000E+0
PlNSMass 2 55 3.75000000000000E+2

1.00000000000000E+0 0.00000000000000E+0 0.00000000000000E+0
0.00000000000000E+0
PlNSMass 2 56 3.75000000000000E+2
1.00000000000000E+0 0.00000000000000E+0 0.00000000000000E+0
0.00000000000000E+0
PlNSMass 2 57 3.75000000000000E+2
1.00000000000000E+0 0.00000000000000E+0 0.00000000000000E+0
0.00000000000000E+0
PlNSMass 2 58 3.75000000000000E+2
1.00000000000000E+0 0.00000000000000E+0 0.00000000000000E+0
0.00000000000000E+0
PlNSMass 2 59 3.75000000000000E+2
1.00000000000000E+0 0.00000000000000E+0 0.00000000000000E+0
0.00000000000000E+0
PlNSMass 2 60 3.75000000000000E+2
1.00000000000000E+0 0.00000000000000E+0 0.00000000000000E+0
0.00000000000000E+0
PlNSMass 2 61 3.75000000000000E+2
1.00000000000000E+0 0.00000000000000E+0 0.00000000000000E+0
0.00000000000000E+0
PlNSMass 2 62 3.75000000000000E+2
1.00000000000000E+0 0.00000000000000E+0 0.00000000000000E+0
0.00000000000000E+0
PlNSMass 2 63 3.75000000000000E+2
1.00000000000000E+0 0.00000000000000E+0 0.00000000000000E+0
0.00000000000000E+0
PlNSMass 2 64 3.75000000000000E+2
1.00000000000000E+0 0.00000000000000E+0 0.00000000000000E+0
0.00000000000000E+0
PlNSMass 2 65 3.75000000000000E+2
1.00000000000000E+0 0.00000000000000E+0 0.00000000000000E+0
0.00000000000000E+0
PlNSMass 2 66 3.75000000000000E+2
1.00000000000000E+0 0.00000000000000E+0 0.00000000000000E+0
0.00000000000000E+0
PlNSMass 2 67 3.75000000000000E+2
1.00000000000000E+0 0.00000000000000E+0 0.00000000000000E+0
0.00000000000000E+0
PlNSMass 2 68 3.75000000000000E+2
1.00000000000000E+0 0.00000000000000E+0 0.00000000000000E+0
0.00000000000000E+0
PlNSMass 2 69 3.75000000000000E+2
1.00000000000000E+0 0.00000000000000E+0 0.00000000000000E+0
0.00000000000000E+0
PlNSMass 2 70 3.75000000000000E+2
1.00000000000000E+0 0.00000000000000E+0 0.00000000000000E+0
0.00000000000000E+0
PlNSMass 2 71 3.75000000000000E+2
1.00000000000000E+0 0.00000000000000E+0 0.00000000000000E+0
0.00000000000000E+0
PlNSMass 2 72 3.75000000000000E+2
1.00000000000000E+0 0.00000000000000E+0 0.00000000000000E+0
0.00000000000000E+0
PlNSMass 2 73 3.75000000000000E+2

1.00000000000000E+0 0.00000000000000E+0 0.00000000000000E+0
0.00000000000000E+0
PlNSMass 2 74 3.75000000000000E+2
1.00000000000000E+0 0.00000000000000E+0 0.00000000000000E+0
0.00000000000000E+0
PlNSMass 2 75 3.75000000000000E+2
1.00000000000000E+0 0.00000000000000E+0 0.00000000000000E+0
0.00000000000000E+0
PlNSMass 2 76 3.75000000000000E+2
1.00000000000000E+0 0.00000000000000E+0 0.00000000000000E+0
0.00000000000000E+0
PlNSMass 2 77 3.75000000000000E+2
1.00000000000000E+0 0.00000000000000E+0 0.00000000000000E+0
0.00000000000000E+0
PlNSMass 2 78 3.75000000000000E+2
1.00000000000000E+0 0.00000000000000E+0 0.00000000000000E+0
0.00000000000000E+0
PlNSMass 2 79 3.75000000000000E+2
1.00000000000000E+0 0.00000000000000E+0 0.00000000000000E+0
0.00000000000000E+0
PlNSMass 2 80 3.75000000000000E+2
1.00000000000000E+0 0.00000000000000E+0 0.00000000000000E+0
0.00000000000000E+0
PlNSMass 2 81 3.75000000000000E+2
1.00000000000000E+0 0.00000000000000E+0 0.00000000000000E+0
0.00000000000000E+0
PlNSMass 2 82 3.75000000000000E+2
1.00000000000000E+0 0.00000000000000E+0 0.00000000000000E+0
0.00000000000000E+0
PlNSMass 2 83 3.75000000000000E+2
1.00000000000000E+0 0.00000000000000E+0 0.00000000000000E+0
0.00000000000000E+0
PlNSMass 2 84 3.75000000000000E+2
1.00000000000000E+0 0.00000000000000E+0 0.00000000000000E+0
0.00000000000000E+0
PlNSMass 2 85 3.75000000000000E+2
1.00000000000000E+0 0.00000000000000E+0 0.00000000000000E+0
0.00000000000000E+0
PlNSMass 2 86 3.75000000000000E+2
1.00000000000000E+0 0.00000000000000E+0 0.00000000000000E+0
0.00000000000000E+0
PlNSMass 2 87 3.75000000000000E+2
1.00000000000000E+0 0.00000000000000E+0 0.00000000000000E+0
0.00000000000000E+0
PlNSMass 2 88 3.75000000000000E+2
1.00000000000000E+0 0.00000000000000E+0 0.00000000000000E+0
0.00000000000000E+0
PlNSMass 2 89 3.75000000000000E+2
1.00000000000000E+0 0.00000000000000E+0 0.00000000000000E+0
0.00000000000000E+0
PlNSMass 2 90 3.75000000000000E+2
1.00000000000000E+0 0.00000000000000E+0 0.00000000000000E+0
0.00000000000000E+0
PlNSMass 2 91 3.75000000000000E+2

1.00000000000000E+0 0.00000000000000E+0 0.00000000000000E+0
0.00000000000000E+0
PlNSMass 2 92 3.75000000000000E+2
1.00000000000000E+0 0.00000000000000E+0 0.00000000000000E+0
0.00000000000000E+0
PlNSMass 2 93 3.75000000000000E+2
1.00000000000000E+0 0.00000000000000E+0 0.00000000000000E+0
0.00000000000000E+0
PlNSMass 2 94 3.75000000000000E+2
1.00000000000000E+0 0.00000000000000E+0 0.00000000000000E+0
0.00000000000000E+0
PlNSMass 2 95 3.75000000000000E+2
1.00000000000000E+0 0.00000000000000E+0 0.00000000000000E+0
0.00000000000000E+0
PlNSMass 2 96 3.75000000000000E+2
1.00000000000000E+0 0.00000000000000E+0 0.00000000000000E+0
0.00000000000000E+0
PlNSMass 2 97 3.75000000000000E+2
1.00000000000000E+0 0.00000000000000E+0 0.00000000000000E+0
0.00000000000000E+0
PlNSMass 2 98 3.75000000000000E+2
1.00000000000000E+0 0.00000000000000E+0 0.00000000000000E+0
0.00000000000000E+0
PlNSMass 2 99 3.75000000000000E+2
1.00000000000000E+0 0.00000000000000E+0 0.00000000000000E+0
0.00000000000000E+0
PlNSMass 2 100 3.75000000000000E+2
1.00000000000000E+0 0.00000000000000E+0 0.00000000000000E+0
0.00000000000000E+0
PlNSMass 2 101 3.75000000000000E+2
1.00000000000000E+0 0.00000000000000E+0 0.00000000000000E+0
0.00000000000000E+0
PlNSMass 2 102 3.75000000000000E+2
1.00000000000000E+0 0.00000000000000E+0 0.00000000000000E+0
0.00000000000000E+0
PlNSMass 2 103 3.75000000000000E+2
1.00000000000000E+0 0.00000000000000E+0 0.00000000000000E+0
0.00000000000000E+0
PlNSMass 2 104 3.75000000000000E+2
1.00000000000000E+0 0.00000000000000E+0 0.00000000000000E+0
0.00000000000000E+0
PlNSMass 2 105 3.75000000000000E+2
1.00000000000000E+0 0.00000000000000E+0 0.00000000000000E+0
0.00000000000000E+0
PlNSMass 2 106 3.75000000000000E+2
1.00000000000000E+0 0.00000000000000E+0 0.00000000000000E+0
0.00000000000000E+0
PlNSMass 2 107 3.75000000000000E+2
1.00000000000000E+0 0.00000000000000E+0 0.00000000000000E+0
0.00000000000000E+0
PlNSMass 2 108 3.75000000000000E+2
1.00000000000000E+0 0.00000000000000E+0 0.00000000000000E+0
0.00000000000000E+0
PlNSMass 2 109 3.75000000000000E+2

1.00000000000000E+0 0.00000000000000E+0 0.00000000000000E+0
0.00000000000000E+0
PlNSMass 2 110 3.75000000000000E+2
1.00000000000000E+0 0.00000000000000E+0 0.00000000000000E+0
0.00000000000000E+0
PlNSMass 2 111 3.75000000000000E+2
1.00000000000000E+0 0.00000000000000E+0 0.00000000000000E+0
0.00000000000000E+0
PlNSMass 2 112 3.75000000000000E+2
1.00000000000000E+0 0.00000000000000E+0 0.00000000000000E+0
0.00000000000000E+0
PlNSMass 2 113 3.75000000000000E+2
1.00000000000000E+0 0.00000000000000E+0 0.00000000000000E+0
0.00000000000000E+0
PlNSMass 2 114 3.75000000000000E+2
1.00000000000000E+0 0.00000000000000E+0 0.00000000000000E+0
0.00000000000000E+0
PlNSMass 2 115 3.75000000000000E+2
1.00000000000000E+0 0.00000000000000E+0 0.00000000000000E+0
0.00000000000000E+0
PlNSMass 2 116 3.75000000000000E+2
1.00000000000000E+0 0.00000000000000E+0 0.00000000000000E+0
0.00000000000000E+0
PlNSMass 2 117 3.75000000000000E+2
1.00000000000000E+0 0.00000000000000E+0 0.00000000000000E+0
0.00000000000000E+0
PlNSMass 2 118 3.75000000000000E+2
1.00000000000000E+0 0.00000000000000E+0 0.00000000000000E+0
0.00000000000000E+0
PlNSMass 2 119 3.75000000000000E+2
1.00000000000000E+0 0.00000000000000E+0 0.00000000000000E+0
0.00000000000000E+0
PlNSMass 2 120 3.75000000000000E+2
1.00000000000000E+0 0.00000000000000E+0 0.00000000000000E+0
0.00000000000000E+0
PlNSMass 2 121 3.75000000000000E+2
1.00000000000000E+0 0.00000000000000E+0 0.00000000000000E+0
0.00000000000000E+0
PlNSMass 2 122 3.75000000000000E+2
1.00000000000000E+0 0.00000000000000E+0 0.00000000000000E+0
0.00000000000000E+0
PlNSMass 2 123 3.75000000000000E+2
1.00000000000000E+0 0.00000000000000E+0 0.00000000000000E+0
0.00000000000000E+0
PlNSMass 2 124 3.75000000000000E+2
1.00000000000000E+0 0.00000000000000E+0 0.00000000000000E+0
0.00000000000000E+0
PlNSMass 2 125 3.75000000000000E+2
1.00000000000000E+0 0.00000000000000E+0 0.00000000000000E+0
0.00000000000000E+0
PlNSMass 2 126 3.75000000000000E+2
1.00000000000000E+0 0.00000000000000E+0 0.00000000000000E+0
0.00000000000000E+0
PlNSMass 2 127 3.75000000000000E+2

1.00000000000000E+0 0.00000000000000E+0 0.00000000000000E+0
0.00000000000000E+0
PlNSMass 2 128 3.75000000000000E+2
1.00000000000000E+0 0.00000000000000E+0 0.00000000000000E+0
0.00000000000000E+0
PlNSMass 2 129 3.75000000000000E+2
1.00000000000000E+0 0.00000000000000E+0 0.00000000000000E+0
0.00000000000000E+0
PlNSMass 2 130 3.75000000000000E+2
1.00000000000000E+0 0.00000000000000E+0 0.00000000000000E+0
0.00000000000000E+0
PlNSMass 2 131 3.75000000000000E+2
1.00000000000000E+0 0.00000000000000E+0 0.00000000000000E+0
0.00000000000000E+0
PlNSMass 2 132 3.75000000000000E+2
1.00000000000000E+0 0.00000000000000E+0 0.00000000000000E+0
0.00000000000000E+0
PlNSMass 2 133 3.75000000000000E+2
1.00000000000000E+0 0.00000000000000E+0 0.00000000000000E+0
0.00000000000000E+0
PlNSMass 2 134 3.75000000000000E+2
1.00000000000000E+0 0.00000000000000E+0 0.00000000000000E+0
0.00000000000000E+0
PlNSMass 2 135 3.75000000000000E+2
1.00000000000000E+0 0.00000000000000E+0 0.00000000000000E+0
0.00000000000000E+0
PlNSMass 2 136 3.75000000000000E+2
1.00000000000000E+0 0.00000000000000E+0 0.00000000000000E+0
0.00000000000000E+0
PlNSMass 2 137 3.75000000000000E+2
1.00000000000000E+0 0.00000000000000E+0 0.00000000000000E+0
0.00000000000000E+0
PlNSMass 2 138 3.75000000000000E+2
1.00000000000000E+0 0.00000000000000E+0 0.00000000000000E+0
0.00000000000000E+0
PlNSMass 2 139 3.75000000000000E+2
1.00000000000000E+0 0.00000000000000E+0 0.00000000000000E+0
0.00000000000000E+0
PlNSMass 2 140 3.75000000000000E+2
1.00000000000000E+0 0.00000000000000E+0 0.00000000000000E+0
0.00000000000000E+0
PlNSMass 2 141 3.75000000000000E+2
1.00000000000000E+0 0.00000000000000E+0 0.00000000000000E+0
0.00000000000000E+0
PlNSMass 2 142 3.75000000000000E+2
1.00000000000000E+0 0.00000000000000E+0 0.00000000000000E+0
0.00000000000000E+0
PlNSMass 2 143 3.75000000000000E+2
1.00000000000000E+0 0.00000000000000E+0 0.00000000000000E+0
0.00000000000000E+0
PlNSMass 2 144 3.75000000000000E+2
1.00000000000000E+0 0.00000000000000E+0 0.00000000000000E+0
0.00000000000000E+0
PlNSMass 2 145 3.75000000000000E+2

1.00000000000000E+0 0.00000000000000E+0 0.00000000000000E+0
0.00000000000000E+0
PlNSMass 2 146 3.75000000000000E+2
1.00000000000000E+0 0.00000000000000E+0 0.00000000000000E+0
0.00000000000000E+0
PlNSMass 2 147 3.75000000000000E+2
1.00000000000000E+0 0.00000000000000E+0 0.00000000000000E+0
0.00000000000000E+0
PlNSMass 2 148 3.75000000000000E+2
1.00000000000000E+0 0.00000000000000E+0 0.00000000000000E+0
0.00000000000000E+0
PlNSMass 2 149 3.75000000000000E+2
1.00000000000000E+0 0.00000000000000E+0 0.00000000000000E+0
0.00000000000000E+0
PlNSMass 2 150 3.75000000000000E+2
1.00000000000000E+0 0.00000000000000E+0 0.00000000000000E+0
0.00000000000000E+0
PlNSMass 2 151 3.75000000000000E+2
1.00000000000000E+0 0.00000000000000E+0 0.00000000000000E+0
0.00000000000000E+0
PlNSMass 2 152 3.75000000000000E+2
1.00000000000000E+0 0.00000000000000E+0 0.00000000000000E+0
0.00000000000000E+0
PlNSMass 2 153 3.75000000000000E+2
1.00000000000000E+0 0.00000000000000E+0 0.00000000000000E+0
0.00000000000000E+0
PlNSMass 2 154 3.75000000000000E+2
1.00000000000000E+0 0.00000000000000E+0 0.00000000000000E+0
0.00000000000000E+0
PlNSMass 2 155 3.75000000000000E+2
1.00000000000000E+0 0.00000000000000E+0 0.00000000000000E+0
0.00000000000000E+0
PlNSMass 2 156 3.75000000000000E+2
1.00000000000000E+0 0.00000000000000E+0 0.00000000000000E+0
0.00000000000000E+0
PlNSMass 2 157 3.75000000000000E+2
1.00000000000000E+0 0.00000000000000E+0 0.00000000000000E+0
0.00000000000000E+0
PlNSMass 2 158 3.75000000000000E+2
1.00000000000000E+0 0.00000000000000E+0 0.00000000000000E+0
0.00000000000000E+0
PlNSMass 2 159 3.75000000000000E+2
1.00000000000000E+0 0.00000000000000E+0 0.00000000000000E+0
0.00000000000000E+0
PlNSMass 2 160 3.75000000000000E+2
1.00000000000000E+0 0.00000000000000E+0 0.00000000000000E+0
0.00000000000000E+0
PlNSMass 2 161 3.75000000000000E+2
1.00000000000000E+0 0.00000000000000E+0 0.00000000000000E+0
0.00000000000000E+0
PlNSMass 2 162 3.75000000000000E+2
1.00000000000000E+0 0.00000000000000E+0 0.00000000000000E+0
0.00000000000000E+0
PlNSMass 2 163 3.75000000000000E+2

1.00000000000000E+0 0.00000000000000E+0 0.00000000000000E+0
0.00000000000000E+0
PlNSMass 2 164 3.75000000000000E+2
1.00000000000000E+0 0.00000000000000E+0 0.00000000000000E+0
0.00000000000000E+0
PlNSMass 2 165 3.75000000000000E+2
1.00000000000000E+0 0.00000000000000E+0 0.00000000000000E+0
0.00000000000000E+0
PlNSMass 2 166 3.75000000000000E+2
1.00000000000000E+0 0.00000000000000E+0 0.00000000000000E+0
0.00000000000000E+0
PlNSMass 2 167 3.75000000000000E+2
1.00000000000000E+0 0.00000000000000E+0 0.00000000000000E+0
0.00000000000000E+0
PlNSMass 2 168 3.75000000000000E+2
1.00000000000000E+0 0.00000000000000E+0 0.00000000000000E+0
0.00000000000000E+0
PlNSMass 2 169 3.75000000000000E+2
1.00000000000000E+0 0.00000000000000E+0 0.00000000000000E+0
0.00000000000000E+0
PlNSMass 2 170 3.75000000000000E+2
1.00000000000000E+0 0.00000000000000E+0 0.00000000000000E+0
0.00000000000000E+0
PlNSMass 2 171 3.75000000000000E+2
1.00000000000000E+0 0.00000000000000E+0 0.00000000000000E+0
0.00000000000000E+0
PlNSMass 2 172 3.75000000000000E+2
1.00000000000000E+0 0.00000000000000E+0 0.00000000000000E+0
0.00000000000000E+0
PlNSMass 2 173 3.75000000000000E+2
1.00000000000000E+0 0.00000000000000E+0 0.00000000000000E+0
0.00000000000000E+0
PlNSMass 2 174 3.75000000000000E+2
1.00000000000000E+0 0.00000000000000E+0 0.00000000000000E+0
0.00000000000000E+0
PlNSMass 2 175 3.75000000000000E+2
1.00000000000000E+0 0.00000000000000E+0 0.00000000000000E+0
0.00000000000000E+0
PlNSMass 2 176 3.75000000000000E+2
1.00000000000000E+0 0.00000000000000E+0 0.00000000000000E+0
0.00000000000000E+0
PlNSMass 2 177 3.75000000000000E+2
1.00000000000000E+0 0.00000000000000E+0 0.00000000000000E+0
0.00000000000000E+0
PlNSMass 2 178 3.75000000000000E+2
1.00000000000000E+0 0.00000000000000E+0 0.00000000000000E+0
0.00000000000000E+0
PlNSMass 2 179 3.75000000000000E+2
1.00000000000000E+0 0.00000000000000E+0 0.00000000000000E+0
0.00000000000000E+0
PlNSMass 2 180 3.75000000000000E+2
1.00000000000000E+0 0.00000000000000E+0 0.00000000000000E+0
0.00000000000000E+0
PlNSMass 2 181 3.75000000000000E+2

1.00000000000000E+0 0.00000000000000E+0 0.00000000000000E+0
0.00000000000000E+0
PlNSMass 2 182 3.75000000000000E+2
1.00000000000000E+0 0.00000000000000E+0 0.00000000000000E+0
0.00000000000000E+0
PlNSMass 2 183 3.75000000000000E+2
1.00000000000000E+0 0.00000000000000E+0 0.00000000000000E+0
0.00000000000000E+0
PlNSMass 2 184 3.75000000000000E+2
1.00000000000000E+0 0.00000000000000E+0 0.00000000000000E+0
0.00000000000000E+0
PlNSMass 2 185 3.75000000000000E+2
1.00000000000000E+0 0.00000000000000E+0 0.00000000000000E+0
0.00000000000000E+0
PlNSMass 2 186 3.75000000000000E+2
1.00000000000000E+0 0.00000000000000E+0 0.00000000000000E+0
0.00000000000000E+0
PlNSMass 2 187 3.75000000000000E+2
1.00000000000000E+0 0.00000000000000E+0 0.00000000000000E+0
0.00000000000000E+0
PlNSMass 2 188 3.75000000000000E+2
1.00000000000000E+0 0.00000000000000E+0 0.00000000000000E+0
0.00000000000000E+0
PlNSMass 2 189 3.75000000000000E+2
1.00000000000000E+0 0.00000000000000E+0 0.00000000000000E+0
0.00000000000000E+0
PlNSMass 2 190 3.75000000000000E+2
1.00000000000000E+0 0.00000000000000E+0 0.00000000000000E+0
0.00000000000000E+0
PlNSMass 2 191 3.75000000000000E+2
1.00000000000000E+0 0.00000000000000E+0 0.00000000000000E+0
0.00000000000000E+0
PlNSMass 2 192 3.75000000000000E+2
1.00000000000000E+0 0.00000000000000E+0 0.00000000000000E+0
0.00000000000000E+0
PlNSMass 2 193 3.75000000000000E+2
1.00000000000000E+0 0.00000000000000E+0 0.00000000000000E+0
0.00000000000000E+0
PlNSMass 2 194 3.75000000000000E+2
1.00000000000000E+0 0.00000000000000E+0 0.00000000000000E+0
0.00000000000000E+0
PlNSMass 2 195 3.75000000000000E+2
1.00000000000000E+0 0.00000000000000E+0 0.00000000000000E+0
0.00000000000000E+0
PlNSMass 2 196 3.75000000000000E+2
1.00000000000000E+0 0.00000000000000E+0 0.00000000000000E+0
0.00000000000000E+0
PlNSMass 2 197 3.75000000000000E+2
1.00000000000000E+0 0.00000000000000E+0 0.00000000000000E+0
0.00000000000000E+0
PlNSMass 2 198 3.75000000000000E+2
1.00000000000000E+0 0.00000000000000E+0 0.00000000000000E+0
0.00000000000000E+0
PlNSMass 2 199 3.75000000000000E+2

1.00000000000000E+0 0.00000000000000E+0 0.00000000000000E+0
0.00000000000000E+0
PlNSMass 2 200 3.75000000000000E+2
1.00000000000000E+0 0.00000000000000E+0 0.00000000000000E+0
0.00000000000000E+0
PlNSMass 2 201 3.75000000000000E+2
1.00000000000000E+0 0.00000000000000E+0 0.00000000000000E+0
0.00000000000000E+0
PlNSMass 2 202 3.75000000000000E+2
1.00000000000000E+0 0.00000000000000E+0 0.00000000000000E+0
0.00000000000000E+0
PlNSMass 2 203 3.75000000000000E+2
1.00000000000000E+0 0.00000000000000E+0 0.00000000000000E+0
0.00000000000000E+0
PlNSMass 2 204 3.75000000000000E+2
1.00000000000000E+0 0.00000000000000E+0 0.00000000000000E+0
0.00000000000000E+0
PlNSMass 2 205 3.75000000000000E+2
1.00000000000000E+0 0.00000000000000E+0 0.00000000000000E+0
0.00000000000000E+0
PlNSMass 2 206 3.75000000000000E+2
1.00000000000000E+0 0.00000000000000E+0 0.00000000000000E+0
0.00000000000000E+0
PlNSMass 2 207 3.75000000000000E+2
1.00000000000000E+0 0.00000000000000E+0 0.00000000000000E+0
0.00000000000000E+0
PlNSMass 2 208 3.75000000000000E+2
1.00000000000000E+0 0.00000000000000E+0 0.00000000000000E+0
0.00000000000000E+0
PlNSMass 2 209 3.75000000000000E+2
1.00000000000000E+0 0.00000000000000E+0 0.00000000000000E+0
0.00000000000000E+0
PlNSMass 2 210 3.75000000000000E+2
1.00000000000000E+0 0.00000000000000E+0 0.00000000000000E+0
0.00000000000000E+0
PlNSMass 2 211 3.75000000000000E+2
1.00000000000000E+0 0.00000000000000E+0 0.00000000000000E+0
0.00000000000000E+0
PlNSMass 2 212 3.75000000000000E+2
1.00000000000000E+0 0.00000000000000E+0 0.00000000000000E+0
0.00000000000000E+0
PlNSMass 2 213 3.75000000000000E+2
1.00000000000000E+0 0.00000000000000E+0 0.00000000000000E+0
0.00000000000000E+0
PlNSMass 2 214 3.75000000000000E+2
1.00000000000000E+0 0.00000000000000E+0 0.00000000000000E+0
0.00000000000000E+0
PlNSMass 2 215 3.75000000000000E+2
1.00000000000000E+0 0.00000000000000E+0 0.00000000000000E+0
0.00000000000000E+0
PlNSMass 2 216 3.75000000000000E+2
1.00000000000000E+0 0.00000000000000E+0 0.00000000000000E+0
0.00000000000000E+0
PlNSMass 2 217 3.75000000000000E+2

1.00000000000000E+0 0.00000000000000E+0 0.00000000000000E+0
0.00000000000000E+0
PlNSMass 2 218 3.75000000000000E+2
1.00000000000000E+0 0.00000000000000E+0 0.00000000000000E+0
0.00000000000000E+0
PlNSMass 2 219 3.75000000000000E+2
1.00000000000000E+0 0.00000000000000E+0 0.00000000000000E+0
0.00000000000000E+0
PlNSMass 2 220 3.75000000000000E+2
1.00000000000000E+0 0.00000000000000E+0 0.00000000000000E+0
0.00000000000000E+0
PlNSMass 2 221 3.75000000000000E+2
1.00000000000000E+0 0.00000000000000E+0 0.00000000000000E+0
0.00000000000000E+0
PlNSMass 2 222 3.75000000000000E+2
1.00000000000000E+0 0.00000000000000E+0 0.00000000000000E+0
0.00000000000000E+0
PlNSMass 2 223 3.75000000000000E+2
1.00000000000000E+0 0.00000000000000E+0 0.00000000000000E+0
0.00000000000000E+0
PlNSMass 2 224 3.75000000000000E+2
1.00000000000000E+0 0.00000000000000E+0 0.00000000000000E+0
0.00000000000000E+0
PlNSMass 2 225 3.75000000000000E+2
1.00000000000000E+0 0.00000000000000E+0 0.00000000000000E+0
0.00000000000000E+0
PlNSMass 2 226 3.75000000000000E+2
1.00000000000000E+0 0.00000000000000E+0 0.00000000000000E+0
0.00000000000000E+0
PlNSMass 2 227 3.75000000000000E+2
1.00000000000000E+0 0.00000000000000E+0 0.00000000000000E+0
0.00000000000000E+0
PlNSMass 2 228 3.75000000000000E+2
1.00000000000000E+0 0.00000000000000E+0 0.00000000000000E+0
0.00000000000000E+0
PlNSMass 2 229 3.75000000000000E+2
1.00000000000000E+0 0.00000000000000E+0 0.00000000000000E+0
0.00000000000000E+0
PlNSMass 2 230 3.75000000000000E+2
1.00000000000000E+0 0.00000000000000E+0 0.00000000000000E+0
0.00000000000000E+0
PlNSMass 2 231 3.75000000000000E+2
1.00000000000000E+0 0.00000000000000E+0 0.00000000000000E+0
0.00000000000000E+0
PlNSMass 2 232 3.75000000000000E+2
1.00000000000000E+0 0.00000000000000E+0 0.00000000000000E+0
0.00000000000000E+0
PlNSMass 2 233 3.75000000000000E+2
1.00000000000000E+0 0.00000000000000E+0 0.00000000000000E+0
0.00000000000000E+0
PlNSMass 2 234 3.75000000000000E+2
1.00000000000000E+0 0.00000000000000E+0 0.00000000000000E+0
0.00000000000000E+0
PlNSMass 2 235 3.75000000000000E+2

1.00000000000000E+0 0.00000000000000E+0 0.00000000000000E+0
0.00000000000000E+0
PlNSMass 2 236 3.75000000000000E+2
1.00000000000000E+0 0.00000000000000E+0 0.00000000000000E+0
0.00000000000000E+0
PlNSMass 2 237 3.75000000000000E+2
1.00000000000000E+0 0.00000000000000E+0 0.00000000000000E+0
0.00000000000000E+0
PlNSMass 2 238 3.75000000000000E+2
1.00000000000000E+0 0.00000000000000E+0 0.00000000000000E+0
0.00000000000000E+0
PlNSMass 2 239 3.75000000000000E+2
1.00000000000000E+0 0.00000000000000E+0 0.00000000000000E+0
0.00000000000000E+0
PlNSMass 2 240 3.75000000000000E+2
1.00000000000000E+0 0.00000000000000E+0 0.00000000000000E+0
0.00000000000000E+0
PlNSMass 2 241 3.75000000000000E+2
1.00000000000000E+0 0.00000000000000E+0 0.00000000000000E+0
0.00000000000000E+0
PlNSMass 2 242 3.75000000000000E+2
1.00000000000000E+0 0.00000000000000E+0 0.00000000000000E+0
0.00000000000000E+0
PlNSMass 2 243 3.75000000000000E+2
1.00000000000000E+0 0.00000000000000E+0 0.00000000000000E+0
0.00000000000000E+0
PlNSMass 2 244 3.75000000000000E+2
1.00000000000000E+0 0.00000000000000E+0 0.00000000000000E+0
0.00000000000000E+0
PlNSMass 2 245 3.75000000000000E+2
1.00000000000000E+0 0.00000000000000E+0 0.00000000000000E+0
0.00000000000000E+0
PlNSMass 2 246 3.75000000000000E+2
1.00000000000000E+0 0.00000000000000E+0 0.00000000000000E+0
0.00000000000000E+0
PlNSMass 2 247 3.75000000000000E+2
1.00000000000000E+0 0.00000000000000E+0 0.00000000000000E+0
0.00000000000000E+0
PlNSMass 2 248 3.75000000000000E+2
1.00000000000000E+0 0.00000000000000E+0 0.00000000000000E+0
0.00000000000000E+0
PlNSMass 2 249 3.75000000000000E+2
1.00000000000000E+0 0.00000000000000E+0 0.00000000000000E+0
0.00000000000000E+0
PlNSMass 2 250 3.75000000000000E+2
1.00000000000000E+0 0.00000000000000E+0 0.00000000000000E+0
0.00000000000000E+0
PlNSMass 2 251 3.75000000000000E+2
1.00000000000000E+0 0.00000000000000E+0 0.00000000000000E+0
0.00000000000000E+0
PlNSMass 2 252 3.75000000000000E+2
1.00000000000000E+0 0.00000000000000E+0 0.00000000000000E+0
0.00000000000000E+0
PlNSMass 2 253 3.75000000000000E+2

1.00000000000000E+0 0.00000000000000E+0 0.00000000000000E+0
0.00000000000000E+0
PlNSMass 2 254 3.75000000000000E+2
1.00000000000000E+0 0.00000000000000E+0 0.00000000000000E+0
0.00000000000000E+0
PlNSMass 2 255 3.75000000000000E+2
1.00000000000000E+0 0.00000000000000E+0 0.00000000000000E+0
0.00000000000000E+0
PlNSMass 2 256 3.75000000000000E+2
1.00000000000000E+0 0.00000000000000E+0 0.00000000000000E+0
0.00000000000000E+0
PlNSMass 2 257 3.75000000000000E+2
1.00000000000000E+0 0.00000000000000E+0 0.00000000000000E+0
0.00000000000000E+0
PlNSMass 2 258 3.75000000000000E+2
1.00000000000000E+0 0.00000000000000E+0 0.00000000000000E+0
0.00000000000000E+0
PlNSMass 2 259 3.75000000000000E+2
1.00000000000000E+0 0.00000000000000E+0 0.00000000000000E+0
0.00000000000000E+0
PlNSMass 2 260 3.75000000000000E+2
1.00000000000000E+0 0.00000000000000E+0 0.00000000000000E+0
0.00000000000000E+0
PlNSMass 2 261 3.75000000000000E+2
1.00000000000000E+0 0.00000000000000E+0 0.00000000000000E+0
0.00000000000000E+0
PlNSMass 2 262 3.75000000000000E+2
1.00000000000000E+0 0.00000000000000E+0 0.00000000000000E+0
0.00000000000000E+0
PlNSMass 2 263 3.75000000000000E+2
1.00000000000000E+0 0.00000000000000E+0 0.00000000000000E+0
0.00000000000000E+0
PlNSMass 2 264 3.75000000000000E+2
1.00000000000000E+0 0.00000000000000E+0 0.00000000000000E+0
0.00000000000000E+0
PlNSMass 2 265 3.75000000000000E+2
1.00000000000000E+0 0.00000000000000E+0 0.00000000000000E+0
0.00000000000000E+0
PlNSMass 2 266 3.75000000000000E+2
1.00000000000000E+0 0.00000000000000E+0 0.00000000000000E+0
0.00000000000000E+0
PlNSMass 2 267 3.75000000000000E+2
1.00000000000000E+0 0.00000000000000E+0 0.00000000000000E+0
0.00000000000000E+0
PlNSMass 2 268 3.75000000000000E+2
1.00000000000000E+0 0.00000000000000E+0 0.00000000000000E+0
0.00000000000000E+0
PlNSMass 2 269 3.75000000000000E+2
1.00000000000000E+0 0.00000000000000E+0 0.00000000000000E+0
0.00000000000000E+0
PlNSMass 2 270 3.75000000000000E+2
1.00000000000000E+0 0.00000000000000E+0 0.00000000000000E+0
0.00000000000000E+0
PlNSMass 2 271 3.75000000000000E+2

1.00000000000000E+0 0.00000000000000E+0 0.00000000000000E+0
0.00000000000000E+0
PlNSMass 2 272 3.75000000000000E+2
1.00000000000000E+0 0.00000000000000E+0 0.00000000000000E+0
0.00000000000000E+0
PlNSMass 2 273 3.75000000000000E+2
1.00000000000000E+0 0.00000000000000E+0 0.00000000000000E+0
0.00000000000000E+0
PlNSMass 2 274 3.75000000000000E+2
1.00000000000000E+0 0.00000000000000E+0 0.00000000000000E+0
0.00000000000000E+0
PlNSMass 2 275 3.75000000000000E+2
1.00000000000000E+0 0.00000000000000E+0 0.00000000000000E+0
0.00000000000000E+0
PlNSMass 2 276 3.75000000000000E+2
1.00000000000000E+0 0.00000000000000E+0 0.00000000000000E+0
0.00000000000000E+0
PlNSMass 2 277 3.75000000000000E+2
1.00000000000000E+0 0.00000000000000E+0 0.00000000000000E+0
0.00000000000000E+0
PlNSMass 2 278 3.75000000000000E+2
1.00000000000000E+0 0.00000000000000E+0 0.00000000000000E+0
0.00000000000000E+0
PlNSMass 2 279 3.75000000000000E+2
1.00000000000000E+0 0.00000000000000E+0 0.00000000000000E+0
0.00000000000000E+0
PlNSMass 2 280 3.75000000000000E+2
1.00000000000000E+0 0.00000000000000E+0 0.00000000000000E+0
0.00000000000000E+0
PlNSMass 2 281 3.75000000000000E+2
1.00000000000000E+0 0.00000000000000E+0 0.00000000000000E+0
0.00000000000000E+0
PlNSMass 2 282 3.75000000000000E+2
1.00000000000000E+0 0.00000000000000E+0 0.00000000000000E+0
0.00000000000000E+0
PlNSMass 2 283 3.75000000000000E+2
1.00000000000000E+0 0.00000000000000E+0 0.00000000000000E+0
0.00000000000000E+0
PlNSMass 2 284 3.75000000000000E+2
1.00000000000000E+0 0.00000000000000E+0 0.00000000000000E+0
0.00000000000000E+0
PlNSMass 2 285 3.75000000000000E+2
1.00000000000000E+0 0.00000000000000E+0 0.00000000000000E+0
0.00000000000000E+0
PlNSMass 2 286 3.75000000000000E+2
1.00000000000000E+0 0.00000000000000E+0 0.00000000000000E+0
0.00000000000000E+0
PlNSMass 2 287 3.75000000000000E+2
1.00000000000000E+0 0.00000000000000E+0 0.00000000000000E+0
0.00000000000000E+0
PlNSMass 2 288 3.75000000000000E+2
1.00000000000000E+0 0.00000000000000E+0 0.00000000000000E+0
0.00000000000000E+0
PlNSMass 2 289 3.75000000000000E+2

1.00000000000000E+0 0.00000000000000E+0 0.00000000000000E+0
0.00000000000000E+0
PlNSMass 2 290 3.75000000000000E+2
1.00000000000000E+0 0.00000000000000E+0 0.00000000000000E+0
0.00000000000000E+0
PlNSMass 2 291 3.75000000000000E+2
1.00000000000000E+0 0.00000000000000E+0 0.00000000000000E+0
0.00000000000000E+0
PlNSMass 2 292 3.75000000000000E+2
1.00000000000000E+0 0.00000000000000E+0 0.00000000000000E+0
0.00000000000000E+0
PlNSMass 2 293 3.75000000000000E+2
1.00000000000000E+0 0.00000000000000E+0 0.00000000000000E+0
0.00000000000000E+0
PlNSMass 2 294 3.75000000000000E+2
1.00000000000000E+0 0.00000000000000E+0 0.00000000000000E+0
0.00000000000000E+0
PlNSMass 2 295 3.75000000000000E+2
1.00000000000000E+0 0.00000000000000E+0 0.00000000000000E+0
0.00000000000000E+0
PlNSMass 2 296 3.75000000000000E+2
1.00000000000000E+0 0.00000000000000E+0 0.00000000000000E+0
0.00000000000000E+0
PlNSMass 2 297 3.75000000000000E+2
1.00000000000000E+0 0.00000000000000E+0 0.00000000000000E+0
0.00000000000000E+0
PlNSMass 2 298 3.75000000000000E+2
1.00000000000000E+0 0.00000000000000E+0 0.00000000000000E+0
0.00000000000000E+0
PlNSMass 2 299 3.75000000000000E+2
1.00000000000000E+0 0.00000000000000E+0 0.00000000000000E+0
0.00000000000000E+0
PlNSMass 2 300 3.75000000000000E+2
1.00000000000000E+0 0.00000000000000E+0 0.00000000000000E+0
0.00000000000000E+0
PlNSMass 2 301 3.75000000000000E+2
1.00000000000000E+0 0.00000000000000E+0 0.00000000000000E+0
0.00000000000000E+0
PlNSMass 2 302 3.75000000000000E+2
1.00000000000000E+0 0.00000000000000E+0 0.00000000000000E+0
0.00000000000000E+0
PlNSMass 2 303 3.75000000000000E+2
1.00000000000000E+0 0.00000000000000E+0 0.00000000000000E+0
0.00000000000000E+0
PlNSMass 2 304 3.75000000000000E+2
1.00000000000000E+0 0.00000000000000E+0 0.00000000000000E+0
0.00000000000000E+0
PlNSMass 2 305 3.75000000000000E+2
1.00000000000000E+0 0.00000000000000E+0 0.00000000000000E+0
0.00000000000000E+0
PlNSMass 2 306 3.75000000000000E+2
1.00000000000000E+0 0.00000000000000E+0 0.00000000000000E+0
0.00000000000000E+0
PlNSMass 2 307 3.75000000000000E+2

1.00000000000000E+0 0.00000000000000E+0 0.00000000000000E+0
0.00000000000000E+0
PlNSMass 2 308 3.75000000000000E+2
1.00000000000000E+0 0.00000000000000E+0 0.00000000000000E+0
0.00000000000000E+0
PlNSMass 2 309 3.75000000000000E+2
1.00000000000000E+0 0.00000000000000E+0 0.00000000000000E+0
0.00000000000000E+0
PlNSMass 2 310 3.75000000000000E+2
1.00000000000000E+0 0.00000000000000E+0 0.00000000000000E+0
0.00000000000000E+0
PlNSMass 2 311 3.75000000000000E+2
1.00000000000000E+0 0.00000000000000E+0 0.00000000000000E+0
0.00000000000000E+0
PlNSMass 2 312 3.75000000000000E+2
1.00000000000000E+0 0.00000000000000E+0 0.00000000000000E+0
0.00000000000000E+0
PlNSMass 2 313 3.75000000000000E+2
1.00000000000000E+0 0.00000000000000E+0 0.00000000000000E+0
0.00000000000000E+0
PlNSMass 2 314 3.75000000000000E+2
1.00000000000000E+0 0.00000000000000E+0 0.00000000000000E+0
0.00000000000000E+0
PlNSMass 2 315 3.75000000000000E+2
1.00000000000000E+0 0.00000000000000E+0 0.00000000000000E+0
0.00000000000000E+0
PlNSMass 2 316 3.75000000000000E+2
1.00000000000000E+0 0.00000000000000E+0 0.00000000000000E+0
0.00000000000000E+0
PlNSMass 2 317 3.75000000000000E+2
1.00000000000000E+0 0.00000000000000E+0 0.00000000000000E+0
0.00000000000000E+0
PlNSMass 2 318 3.75000000000000E+2
1.00000000000000E+0 0.00000000000000E+0 0.00000000000000E+0
0.00000000000000E+0
PlNSMass 2 319 3.75000000000000E+2
1.00000000000000E+0 0.00000000000000E+0 0.00000000000000E+0
0.00000000000000E+0
PlNSMass 2 320 3.75000000000000E+2
1.00000000000000E+0 0.00000000000000E+0 0.00000000000000E+0
0.00000000000000E+0
PlNSMass 2 321 3.75000000000000E+2
1.00000000000000E+0 0.00000000000000E+0 0.00000000000000E+0
0.00000000000000E+0
PlNSMass 2 322 3.75000000000000E+2
1.00000000000000E+0 0.00000000000000E+0 0.00000000000000E+0
0.00000000000000E+0
PlNSMass 2 323 3.75000000000000E+2
1.00000000000000E+0 0.00000000000000E+0 0.00000000000000E+0
0.00000000000000E+0
PlNSMass 2 324 3.75000000000000E+2
1.00000000000000E+0 0.00000000000000E+0 0.00000000000000E+0
0.00000000000000E+0
PlNSMass 2 325 3.75000000000000E+2

```
1.00000000000000E+0      0.00000000000000E+0      0.00000000000000E+0
0.00000000000000E+0
   PlNSMass                 2     326     3.75000000000000E+2
1.00000000000000E+0      0.00000000000000E+0      0.00000000000000E+0
0.00000000000000E+0
   PlNSMass                 2     327     3.75000000000000E+2
1.00000000000000E+0      0.00000000000000E+0      0.00000000000000E+0
0.00000000000000E+0
   PlNSMass                 2     328     3.75000000000000E+2
1.00000000000000E+0      0.00000000000000E+0      0.00000000000000E+0
0.00000000000000E+0
   PlNSMass                 2     329     3.75000000000000E+2
1.00000000000000E+0      0.00000000000000E+0      0.00000000000000E+0
0.00000000000000E+0
   PlNSMass                 2     330     3.75000000000000E+2
1.00000000000000E+0      0.00000000000000E+0      0.00000000000000E+0
0.00000000000000E+0
   PlNSMass                 2     331     3.75000000000000E+2
1.00000000000000E+0      0.00000000000000E+0      0.00000000000000E+0
0.00000000000000E+0
   PlNSMass                 2     332     3.75000000000000E+2
1.00000000000000E+0      0.00000000000000E+0      0.00000000000000E+0
0.00000000000000E+0
   PlNSMass                 2     333     3.75000000000000E+2
1.00000000000000E+0      0.00000000000000E+0      0.00000000000000E+0
0.00000000000000E+0
   PlNSMass                 2     334     3.75000000000000E+2
1.00000000000000E+0      0.00000000000000E+0      0.00000000000000E+0
0.00000000000000E+0
   PlNSMass                 2     335     3.75000000000000E+2
1.00000000000000E+0      0.00000000000000E+0      0.00000000000000E+0
0.00000000000000E+0
   PlNSMass                 2     336     3.75000000000000E+2
1.00000000000000E+0      0.00000000000000E+0      0.00000000000000E+0
0.00000000000000E+0

/ ____________________________________________________________________________
/ BEAM NON-STRUCTURAL MASSES
/ G02a - Carico Pannelli Fonoassorbenti
   BmNSMass                 3       1       1     7.00000000000000E+2
7.00000000000000E+2      0.00000000000000E+0      0.00000000000000E+0
0.00000000000000E+0      0.00000000000000E+0      1.00000000000000E+0
    0.00000000000000E+0      0.00000000000000E+0      0.00000000000000E+0
   BmNSMass                 3       2       1     7.00000000000000E+2
7.00000000000000E+2      0.00000000000000E+0      0.00000000000000E+0
0.00000000000000E+0      0.00000000000000E+0      1.00000000000000E+0
    0.00000000000000E+0      0.00000000000000E+0      0.00000000000000E+0
   BmNSMass                 3       3       1     7.00000000000000E+2
7.00000000000000E+2      0.00000000000000E+0      0.00000000000000E+0
0.00000000000000E+0      0.00000000000000E+0      1.00000000000000E+0
    0.00000000000000E+0      0.00000000000000E+0      0.00000000000000E+0
   BmNSMass                 3       4       1     7.00000000000000E+2
7.00000000000000E+2      0.00000000000000E+0      0.00000000000000E+0
0.00000000000000E+0      0.00000000000000E+0      1.00000000000000E+0
```

```
    0.00000000000000E+0      0.00000000000000E+0      0.00000000000000E+0
   BmNSMass                 3       5       1     7.00000000000000E+2
7.00000000000000E+2      0.00000000000000E+0      0.00000000000000E+0
0.00000000000000E+0      0.00000000000000E+0      1.00000000000000E+0
    0.00000000000000E+0      0.00000000000000E+0      0.00000000000000E+0
   BmNSMass                 3       6       1     7.00000000000000E+2
7.00000000000000E+2      0.00000000000000E+0      0.00000000000000E+0
0.00000000000000E+0      0.00000000000000E+0      1.00000000000000E+0
    0.00000000000000E+0      0.00000000000000E+0      0.00000000000000E+0
   BmNSMass                 3       7       1     7.00000000000000E+2
7.00000000000000E+2      0.00000000000000E+0      0.00000000000000E+0
0.00000000000000E+0      0.00000000000000E+0      1.00000000000000E+0
    0.00000000000000E+0      0.00000000000000E+0      0.00000000000000E+0
   BmNSMass                 3       8       1     7.00000000000000E+2
7.00000000000000E+2      0.00000000000000E+0      0.00000000000000E+0
0.00000000000000E+0      0.00000000000000E+0      1.00000000000000E+0
    0.00000000000000E+0      0.00000000000000E+0      0.00000000000000E+0
   BmNSMass                 3       9       1     7.00000000000000E+2
7.00000000000000E+2      0.00000000000000E+0      0.00000000000000E+0
0.00000000000000E+0      0.00000000000000E+0      1.00000000000000E+0
    0.00000000000000E+0      0.00000000000000E+0      0.00000000000000E+0
   BmNSMass                 3      10       1     7.00000000000000E+2
7.00000000000000E+2      0.00000000000000E+0      0.00000000000000E+0
0.00000000000000E+0      0.00000000000000E+0      1.00000000000000E+0
    0.00000000000000E+0      0.00000000000000E+0      0.00000000000000E+0
   BmNSMass                 3      11       1     7.00000000000000E+2
7.00000000000000E+2      0.00000000000000E+0      0.00000000000000E+0
0.00000000000000E+0      0.00000000000000E+0      1.00000000000000E+0
    0.00000000000000E+0      0.00000000000000E+0      0.00000000000000E+0
   BmNSMass                 3      12       1     7.00000000000000E+2
7.00000000000000E+2      0.00000000000000E+0      0.00000000000000E+0
0.00000000000000E+0      0.00000000000000E+0      1.00000000000000E+0
    0.00000000000000E+0      0.00000000000000E+0      0.00000000000000E+0
   BmNSMass                 3      13       1     1.50000000000000E+2
1.50000000000000E+2      0.00000000000000E+0      0.00000000000000E+0
0.00000000000000E+0      0.00000000000000E+0      1.00000000000000E+0
    0.00000000000000E+0      0.00000000000000E+0      0.00000000000000E+0
   BmNSMass                 3      14       1     3.00000000000000E+2
3.00000000000000E+2      0.00000000000000E+0      0.00000000000000E+0
0.00000000000000E+0      0.00000000000000E+0      1.00000000000000E+0
    0.00000000000000E+0      0.00000000000000E+0      0.00000000000000E+0
   BmNSMass                 3      15       1     3.00000000000000E+2
3.00000000000000E+2      0.00000000000000E+0      0.00000000000000E+0
0.00000000000000E+0      0.00000000000000E+0      1.00000000000000E+0
    0.00000000000000E+0      0.00000000000000E+0      0.00000000000000E+0
   BmNSMass                 3      16       1     3.00000000000000E+2
3.00000000000000E+2      0.00000000000000E+0      0.00000000000000E+0
0.00000000000000E+0      0.00000000000000E+0      1.00000000000000E+0
    0.00000000000000E+0      0.00000000000000E+0      0.00000000000000E+0
   BmNSMass                 3      17       1     3.00000000000000E+2
3.00000000000000E+2      0.00000000000000E+0      0.00000000000000E+0
0.00000000000000E+0      0.00000000000000E+0      1.00000000000000E+0
    0.00000000000000E+0      0.00000000000000E+0      0.00000000000000E+0
   BmNSMass                 3      18       1     3.00000000000000E+2
```

```
3.00000000000000E+2      0.00000000000000E+0      0.00000000000000E+0
0.00000000000000E+0      0.00000000000000E+0      1.00000000000000E+0
    0.00000000000000E+0      0.00000000000000E+0      0.00000000000000E+0
   BmNSMass                 3      19        1     3.00000000000000E+2
3.00000000000000E+2      0.00000000000000E+0      0.00000000000000E+0
0.00000000000000E+0      0.00000000000000E+0      1.00000000000000E+0
    0.00000000000000E+0      0.00000000000000E+0      0.00000000000000E+0
   BmNSMass                 3      20        1     3.00000000000000E+2
3.00000000000000E+2      0.00000000000000E+0      0.00000000000000E+0
0.00000000000000E+0      0.00000000000000E+0      1.00000000000000E+0
    0.00000000000000E+0      0.00000000000000E+0      0.00000000000000E+0
   BmNSMass                 3      21        1     3.00000000000000E+2
3.00000000000000E+2      0.00000000000000E+0      0.00000000000000E+0
0.00000000000000E+0      0.00000000000000E+0      1.00000000000000E+0
    0.00000000000000E+0      0.00000000000000E+0      0.00000000000000E+0
   BmNSMass                 3      22        1     1.50000000000000E+2
1.50000000000000E+2      0.00000000000000E+0      0.00000000000000E+0
0.00000000000000E+0      0.00000000000000E+0      1.00000000000000E+0
    0.00000000000000E+0      0.00000000000000E+0      0.00000000000000E+0
   BmNSMass                 3      25        1     7.00000000000000E+2
7.00000000000000E+2      0.00000000000000E+0      0.00000000000000E+0
0.00000000000000E+0      0.00000000000000E+0      1.00000000000000E+0
    0.00000000000000E+0      0.00000000000000E+0      0.00000000000000E+0
   BmNSMass                 3      26        1     7.00000000000000E+2
7.00000000000000E+2      0.00000000000000E+0      0.00000000000000E+0
0.00000000000000E+0      0.00000000000000E+0      1.00000000000000E+0
    0.00000000000000E+0      0.00000000000000E+0      0.00000000000000E+0
   BmNSMass                 3      27        1     7.00000000000000E+2
7.00000000000000E+2      0.00000000000000E+0      0.00000000000000E+0
0.00000000000000E+0      0.00000000000000E+0      1.00000000000000E+0
    0.00000000000000E+0      0.00000000000000E+0      0.00000000000000E+0
   BmNSMass                 3      28        1     7.00000000000000E+2
7.00000000000000E+2      0.00000000000000E+0      0.00000000000000E+0
0.00000000000000E+0      0.00000000000000E+0      1.00000000000000E+0
    0.00000000000000E+0      0.00000000000000E+0      0.00000000000000E+0
   BmNSMass                 3      29        1     7.00000000000000E+2
7.00000000000000E+2      0.00000000000000E+0      0.00000000000000E+0
0.00000000000000E+0      0.00000000000000E+0      1.00000000000000E+0
    0.00000000000000E+0      0.00000000000000E+0      0.00000000000000E+0
   BmNSMass                 3      30        1     7.00000000000000E+2
7.00000000000000E+2      0.00000000000000E+0      0.00000000000000E+0
0.00000000000000E+0      0.00000000000000E+0      1.00000000000000E+0
    0.00000000000000E+0      0.00000000000000E+0      0.00000000000000E+0
   BmNSMass                 3      31        1     7.00000000000000E+2
7.00000000000000E+2      0.00000000000000E+0      0.00000000000000E+0
0.00000000000000E+0      0.00000000000000E+0      1.00000000000000E+0
    0.00000000000000E+0      0.00000000000000E+0      0.00000000000000E+0
   BmNSMass                 3      32        1     7.00000000000000E+2
7.00000000000000E+2      0.00000000000000E+0      0.00000000000000E+0
0.00000000000000E+0      0.00000000000000E+0      1.00000000000000E+0
    0.00000000000000E+0      0.00000000000000E+0      0.00000000000000E+0
   BmNSMass                 3      33        1     7.00000000000000E+2
7.00000000000000E+2      0.00000000000000E+0      0.00000000000000E+0
0.00000000000000E+0      0.00000000000000E+0      1.00000000000000E+0
```

```
    0.00000000000000E+0      0.00000000000000E+0      0.00000000000000E+0
   BmNSMass                 3      34        1     7.00000000000000E+2
7.00000000000000E+2      0.00000000000000E+0      0.00000000000000E+0
0.00000000000000E+0      0.00000000000000E+0      1.00000000000000E+0
    0.00000000000000E+0      0.00000000000000E+0      0.00000000000000E+0
   BmNSMass                 3      35        1     7.00000000000000E+2
7.00000000000000E+2      0.00000000000000E+0      0.00000000000000E+0
0.00000000000000E+0      0.00000000000000E+0      1.00000000000000E+0
    0.00000000000000E+0      0.00000000000000E+0      0.00000000000000E+0
   BmNSMass                 3      36        1     7.00000000000000E+2
7.00000000000000E+2      0.00000000000000E+0      0.00000000000000E+0
0.00000000000000E+0      0.00000000000000E+0      1.00000000000000E+0
    0.00000000000000E+0      0.00000000000000E+0      0.00000000000000E+0
   BmNSMass                 3      37        1     7.00000000000000E+2
7.00000000000000E+2      0.00000000000000E+0      0.00000000000000E+0
0.00000000000000E+0      0.00000000000000E+0      1.00000000000000E+0
    0.00000000000000E+0      0.00000000000000E+0      0.00000000000000E+0
   BmNSMass                 3      38        1     7.00000000000000E+2
7.00000000000000E+2      0.00000000000000E+0      0.00000000000000E+0
0.00000000000000E+0      0.00000000000000E+0      1.00000000000000E+0
    0.00000000000000E+0      0.00000000000000E+0      0.00000000000000E+0
   BmNSMass                 3      39        1     7.00000000000000E+2
7.00000000000000E+2      0.00000000000000E+0      0.00000000000000E+0
0.00000000000000E+0      0.00000000000000E+0      1.00000000000000E+0
    0.00000000000000E+0      0.00000000000000E+0      0.00000000000000E+0
   BmNSMass                 3      40        1     7.00000000000000E+2
7.00000000000000E+2      0.00000000000000E+0      0.00000000000000E+0
0.00000000000000E+0      0.00000000000000E+0      1.00000000000000E+0
    0.00000000000000E+0      0.00000000000000E+0      0.00000000000000E+0
   BmNSMass                 3      41        1     7.00000000000000E+2
7.00000000000000E+2      0.00000000000000E+0      0.00000000000000E+0
0.00000000000000E+0      0.00000000000000E+0      1.00000000000000E+0
    0.00000000000000E+0      0.00000000000000E+0      0.00000000000000E+0
   BmNSMass                 3      42        1     7.00000000000000E+2
7.00000000000000E+2      0.00000000000000E+0      0.00000000000000E+0
0.00000000000000E+0      0.00000000000000E+0      1.00000000000000E+0
    0.00000000000000E+0      0.00000000000000E+0      0.00000000000000E+0
   BmNSMass                 3      43        1     7.00000000000000E+2
7.00000000000000E+2      0.00000000000000E+0      0.00000000000000E+0
0.00000000000000E+0      0.00000000000000E+0      1.00000000000000E+0
    0.00000000000000E+0      0.00000000000000E+0      0.00000000000000E+0
   BmNSMass                 3      44        1     7.00000000000000E+2
7.00000000000000E+2      0.00000000000000E+0      0.00000000000000E+0
0.00000000000000E+0      0.00000000000000E+0      1.00000000000000E+0
    0.00000000000000E+0      0.00000000000000E+0      0.00000000000000E+0
   BmNSMass                 3      45        1     7.00000000000000E+2
7.00000000000000E+2      0.00000000000000E+0      0.00000000000000E+0
0.00000000000000E+0      0.00000000000000E+0      1.00000000000000E+0
    0.00000000000000E+0      0.00000000000000E+0      0.00000000000000E+0
   BmNSMass                 3      46        1     7.00000000000000E+2
7.00000000000000E+2      0.00000000000000E+0      0.00000000000000E+0
0.00000000000000E+0      0.00000000000000E+0      1.00000000000000E+0
    0.00000000000000E+0      0.00000000000000E+0      0.00000000000000E+0
   BmNSMass                 3      47        1     7.00000000000000E+2
```

```
7.00000000000000E+2      0.00000000000000E+0      0.00000000000000E+0
0.00000000000000E+0      0.00000000000000E+0      1.00000000000000E+0
    0.00000000000000E+0      0.00000000000000E+0      0.00000000000000E+0
   BmNSMass                 3      48        1     7.00000000000000E+2
7.00000000000000E+2      0.00000000000000E+0      0.00000000000000E+0
0.00000000000000E+0      0.00000000000000E+0      1.00000000000000E+0
    0.00000000000000E+0      0.00000000000000E+0      0.00000000000000E+0
   BmNSMass                 3      49        1     7.00000000000000E+2
7.00000000000000E+2      0.00000000000000E+0      0.00000000000000E+0
0.00000000000000E+0      0.00000000000000E+0      1.00000000000000E+0
    0.00000000000000E+0      0.00000000000000E+0      0.00000000000000E+0
   BmNSMass                 3      50        1     7.00000000000000E+2
7.00000000000000E+2      0.00000000000000E+0      0.00000000000000E+0
0.00000000000000E+0      0.00000000000000E+0      1.00000000000000E+0
    0.00000000000000E+0      0.00000000000000E+0      0.00000000000000E+0
   BmNSMass                 3      51        1     7.00000000000000E+2
7.00000000000000E+2      0.00000000000000E+0      0.00000000000000E+0
0.00000000000000E+0      0.00000000000000E+0      1.00000000000000E+0
    0.00000000000000E+0      0.00000000000000E+0      0.00000000000000E+0
   BmNSMass                 3      52        1     7.00000000000000E+2
7.00000000000000E+2      0.00000000000000E+0      0.00000000000000E+0
0.00000000000000E+0      0.00000000000000E+0      1.00000000000000E+0
    0.00000000000000E+0      0.00000000000000E+0      0.00000000000000E+0
   BmNSMass                 3      53        1     7.00000000000000E+2
7.00000000000000E+2      0.00000000000000E+0      0.00000000000000E+0
0.00000000000000E+0      0.00000000000000E+0      1.00000000000000E+0
    0.00000000000000E+0      0.00000000000000E+0      0.00000000000000E+0
   BmNSMass                 3      54        1     7.00000000000000E+2
7.00000000000000E+2      0.00000000000000E+0      0.00000000000000E+0
0.00000000000000E+0      0.00000000000000E+0      1.00000000000000E+0
    0.00000000000000E+0      0.00000000000000E+0      0.00000000000000E+0
   BmNSMass                 3      55        1     7.00000000000000E+2
7.00000000000000E+2      0.00000000000000E+0      0.00000000000000E+0
0.00000000000000E+0      0.00000000000000E+0      1.00000000000000E+0
    0.00000000000000E+0      0.00000000000000E+0      0.00000000000000E+0
   BmNSMass                 3      56        1     7.00000000000000E+2
7.00000000000000E+2      0.00000000000000E+0      0.00000000000000E+0
0.00000000000000E+0      0.00000000000000E+0      1.00000000000000E+0
    0.00000000000000E+0      0.00000000000000E+0      0.00000000000000E+0
   BmNSMass                 3      57        1     7.00000000000000E+2
7.00000000000000E+2      0.00000000000000E+0      0.00000000000000E+0
0.00000000000000E+0      0.00000000000000E+0      1.00000000000000E+0
    0.00000000000000E+0      0.00000000000000E+0      0.00000000000000E+0
   BmNSMass                 3      58        1     7.00000000000000E+2
7.00000000000000E+2      0.00000000000000E+0      0.00000000000000E+0
0.00000000000000E+0      0.00000000000000E+0      1.00000000000000E+0
    0.00000000000000E+0      0.00000000000000E+0      0.00000000000000E+0
   BmNSMass                 3      59        1     7.00000000000000E+2
7.00000000000000E+2      0.00000000000000E+0      0.00000000000000E+0
0.00000000000000E+0      0.00000000000000E+0      1.00000000000000E+0
    0.00000000000000E+0      0.00000000000000E+0      0.00000000000000E+0
   BmNSMass                 3      60        1     7.00000000000000E+2
7.00000000000000E+2      0.00000000000000E+0      0.00000000000000E+0
0.00000000000000E+0      0.00000000000000E+0      1.00000000000000E+0
```

```
    0.00000000000000E+0      0.00000000000000E+0      0.00000000000000E+0
   BmNSMass                 3      61        1     7.00000000000000E+2
7.00000000000000E+2      0.00000000000000E+0      0.00000000000000E+0
0.00000000000000E+0      0.00000000000000E+0      1.00000000000000E+0
    0.00000000000000E+0      0.00000000000000E+0      0.00000000000000E+0
   BmNSMass                 3      62        1     7.00000000000000E+2
7.00000000000000E+2      0.00000000000000E+0      0.00000000000000E+0
0.00000000000000E+0      0.00000000000000E+0      1.00000000000000E+0
    0.00000000000000E+0      0.00000000000000E+0      0.00000000000000E+0
   BmNSMass                 3      63        1     7.00000000000000E+2
7.00000000000000E+2      0.00000000000000E+0      0.00000000000000E+0
0.00000000000000E+0      0.00000000000000E+0      1.00000000000000E+0
    0.00000000000000E+0      0.00000000000000E+0      0.00000000000000E+0
   BmNSMass                 3      64        1     7.00000000000000E+2
7.00000000000000E+2      0.00000000000000E+0      0.00000000000000E+0
0.00000000000000E+0      0.00000000000000E+0      1.00000000000000E+0
    0.00000000000000E+0      0.00000000000000E+0      0.00000000000000E+0
   BmNSMass                 3      65        1     7.00000000000000E+2
7.00000000000000E+2      0.00000000000000E+0      0.00000000000000E+0
0.00000000000000E+0      0.00000000000000E+0      1.00000000000000E+0
    0.00000000000000E+0      0.00000000000000E+0      0.00000000000000E+0
   BmNSMass                 3      66        1     7.00000000000000E+2
7.00000000000000E+2      0.00000000000000E+0      0.00000000000000E+0
0.00000000000000E+0      0.00000000000000E+0      1.00000000000000E+0
    0.00000000000000E+0      0.00000000000000E+0      0.00000000000000E+0
   BmNSMass                 3      67        1     7.00000000000000E+2
7.00000000000000E+2      0.00000000000000E+0      0.00000000000000E+0
0.00000000000000E+0      0.00000000000000E+0      1.00000000000000E+0
    0.00000000000000E+0      0.00000000000000E+0      0.00000000000000E+0
   BmNSMass                 3      68        1     7.00000000000000E+2
7.00000000000000E+2      0.00000000000000E+0      0.00000000000000E+0
0.00000000000000E+0      0.00000000000000E+0      1.00000000000000E+0
    0.00000000000000E+0      0.00000000000000E+0      0.00000000000000E+0
   BmNSMass                 3     164        1     1.50000000000000E+2
1.50000000000000E+2      0.00000000000000E+0      0.00000000000000E+0
0.00000000000000E+0      0.00000000000000E+0      1.00000000000000E+0
    0.00000000000000E+0      0.00000000000000E+0      0.00000000000000E+0
   BmNSMass                 3     165        1     1.50000000000000E+2
1.50000000000000E+2      0.00000000000000E+0      0.00000000000000E+0
0.00000000000000E+0      0.00000000000000E+0      1.00000000000000E+0
    0.00000000000000E+0      0.00000000000000E+0      0.00000000000000E+0
   BmNSMass                 3     166        1     1.50000000000000E+2
1.50000000000000E+2      0.00000000000000E+0      0.00000000000000E+0
0.00000000000000E+0      0.00000000000000E+0      1.00000000000000E+0
    0.00000000000000E+0      0.00000000000000E+0      0.00000000000000E+0
   BmNSMass                 3     167        1     1.50000000000000E+2
1.50000000000000E+2      0.00000000000000E+0      0.00000000000000E+0
0.00000000000000E+0      0.00000000000000E+0      1.00000000000000E+0
    0.00000000000000E+0      0.00000000000000E+0      0.00000000000000E+0
   BmNSMass                 3     168        1     1.50000000000000E+2
1.50000000000000E+2      0.00000000000000E+0      0.00000000000000E+0
0.00000000000000E+0      0.00000000000000E+0      1.00000000000000E+0
    0.00000000000000E+0      0.00000000000000E+0      0.00000000000000E+0
   BmNSMass                 3     169        1     1.50000000000000E+2
```

```
1.50000000000000E+2      0.00000000000000E+0      0.00000000000000E+0
0.00000000000000E+0      0.00000000000000E+0      1.00000000000000E+0
    0.00000000000000E+0      0.00000000000000E+0      0.00000000000000E+0
   BmNSMass                 3     170         1     1.50000000000000E+2
1.50000000000000E+2      0.00000000000000E+0      0.00000000000000E+0
0.00000000000000E+0      0.00000000000000E+0      1.00000000000000E+0
    0.00000000000000E+0      0.00000000000000E+0      0.00000000000000E+0
   BmNSMass                 3     171         1     1.50000000000000E+2
1.50000000000000E+2      0.00000000000000E+0      0.00000000000000E+0
0.00000000000000E+0      0.00000000000000E+0      1.00000000000000E+0
    0.00000000000000E+0      0.00000000000000E+0      0.00000000000000E+0
   BmNSMass                 3     172         1     1.50000000000000E+2
1.50000000000000E+2      0.00000000000000E+0      0.00000000000000E+0
0.00000000000000E+0      0.00000000000000E+0      1.00000000000000E+0
    0.00000000000000E+0      0.00000000000000E+0      0.00000000000000E+0
   BmNSMass                 3     173         1     1.50000000000000E+2
1.50000000000000E+2      0.00000000000000E+0      0.00000000000000E+0
0.00000000000000E+0      0.00000000000000E+0      1.00000000000000E+0
    0.00000000000000E+0      0.00000000000000E+0      0.00000000000000E+0
   BmNSMass                 3     174         1     1.50000000000000E+2
1.50000000000000E+2      0.00000000000000E+0      0.00000000000000E+0
0.00000000000000E+0      0.00000000000000E+0      1.00000000000000E+0
    0.00000000000000E+0      0.00000000000000E+0      0.00000000000000E+0
   BmNSMass                 3     175         1     1.50000000000000E+2
1.50000000000000E+2      0.00000000000000E+0      0.00000000000000E+0
0.00000000000000E+0      0.00000000000000E+0      1.00000000000000E+0
    0.00000000000000E+0      0.00000000000000E+0      0.00000000000000E+0
   BmNSMass                 3     176         1     1.50000000000000E+2
1.50000000000000E+2      0.00000000000000E+0      0.00000000000000E+0
0.00000000000000E+0      0.00000000000000E+0      1.00000000000000E+0
    0.00000000000000E+0      0.00000000000000E+0      0.00000000000000E+0
   BmNSMass                 3     177         1     1.50000000000000E+2
1.50000000000000E+2      0.00000000000000E+0      0.00000000000000E+0
0.00000000000000E+0      0.00000000000000E+0      1.00000000000000E+0
    0.00000000000000E+0      0.00000000000000E+0      0.00000000000000E+0
   BmNSMass                 3     178         1     1.50000000000000E+2
1.50000000000000E+2      0.00000000000000E+0      0.00000000000000E+0
0.00000000000000E+0      0.00000000000000E+0      1.00000000000000E+0
    0.00000000000000E+0      0.00000000000000E+0      0.00000000000000E+0
   BmNSMass                 3     179         1     1.50000000000000E+2
1.50000000000000E+2      0.00000000000000E+0      0.00000000000000E+0
0.00000000000000E+0      0.00000000000000E+0      1.00000000000000E+0
    0.00000000000000E+0      0.00000000000000E+0      0.00000000000000E+0
   BmNSMass                 3     180         1     1.50000000000000E+2
1.50000000000000E+2      0.00000000000000E+0      0.00000000000000E+0
0.00000000000000E+0      0.00000000000000E+0      1.00000000000000E+0
    0.00000000000000E+0      0.00000000000000E+0      0.00000000000000E+0
   BmNSMass                 3     181         1     1.50000000000000E+2
1.50000000000000E+2      0.00000000000000E+0      0.00000000000000E+0
0.00000000000000E+0      0.00000000000000E+0      1.00000000000000E+0
    0.00000000000000E+0      0.00000000000000E+0      0.00000000000000E+0
   BmNSMass                 3     182         1     1.50000000000000E+2
1.50000000000000E+2      0.00000000000000E+0      0.00000000000000E+0
0.00000000000000E+0      0.00000000000000E+0      1.00000000000000E+0
```

```
    0.00000000000000E+0      0.00000000000000E+0      0.00000000000000E+0
   BmNSMass                 3     183         1     1.50000000000000E+2
1.50000000000000E+2      0.00000000000000E+0      0.00000000000000E+0
0.00000000000000E+0      0.00000000000000E+0      1.00000000000000E+0
    0.00000000000000E+0      0.00000000000000E+0      0.00000000000000E+0
   BmNSMass                 3     184         1     1.50000000000000E+2
1.50000000000000E+2      0.00000000000000E+0      0.00000000000000E+0
0.00000000000000E+0      0.00000000000000E+0      1.00000000000000E+0
    0.00000000000000E+0      0.00000000000000E+0      0.00000000000000E+0
   BmNSMass                 3     185         1     1.50000000000000E+2
1.50000000000000E+2      0.00000000000000E+0      0.00000000000000E+0
0.00000000000000E+0      0.00000000000000E+0      1.00000000000000E+0
    0.00000000000000E+0      0.00000000000000E+0      0.00000000000000E+0
   BmNSMass                 3     186         1     1.50000000000000E+2
1.50000000000000E+2      0.00000000000000E+0      0.00000000000000E+0
0.00000000000000E+0      0.00000000000000E+0      1.00000000000000E+0
    0.00000000000000E+0      0.00000000000000E+0      0.00000000000000E+0
   BmNSMass                 3     187         1     1.50000000000000E+2
1.50000000000000E+2      0.00000000000000E+0      0.00000000000000E+0
0.00000000000000E+0      0.00000000000000E+0      1.00000000000000E+0
    0.00000000000000E+0      0.00000000000000E+0      0.00000000000000E+0
   BmNSMass                 3     188         1     1.50000000000000E+2
1.50000000000000E+2      0.00000000000000E+0      0.00000000000000E+0
0.00000000000000E+0      0.00000000000000E+0      1.00000000000000E+0
    0.00000000000000E+0      0.00000000000000E+0      0.00000000000000E+0
   BmNSMass                 3     189         1     1.50000000000000E+2
1.50000000000000E+2      0.00000000000000E+0      0.00000000000000E+0
0.00000000000000E+0      0.00000000000000E+0      1.00000000000000E+0
    0.00000000000000E+0      0.00000000000000E+0      0.00000000000000E+0
   BmNSMass                 3     190         1     1.50000000000000E+2
1.50000000000000E+2      0.00000000000000E+0      0.00000000000000E+0
0.00000000000000E+0      0.00000000000000E+0      1.00000000000000E+0
    0.00000000000000E+0      0.00000000000000E+0      0.00000000000000E+0
   BmNSMass                 3     191         1     1.50000000000000E+2
1.50000000000000E+2      0.00000000000000E+0      0.00000000000000E+0
0.00000000000000E+0      0.00000000000000E+0      1.00000000000000E+0
    0.00000000000000E+0      0.00000000000000E+0      0.00000000000000E+0
   BmNSMass                 3     192         1     1.50000000000000E+2
1.50000000000000E+2      0.00000000000000E+0      0.00000000000000E+0
0.00000000000000E+0      0.00000000000000E+0      1.00000000000000E+0
    0.00000000000000E+0      0.00000000000000E+0      0.00000000000000E+0
   BmNSMass                 3     193         1     1.50000000000000E+2
1.50000000000000E+2      0.00000000000000E+0      0.00000000000000E+0
0.00000000000000E+0      0.00000000000000E+0      1.00000000000000E+0
    0.00000000000000E+0      0.00000000000000E+0      0.00000000000000E+0
   BmNSMass                 3     194         1     1.50000000000000E+2
1.50000000000000E+2      0.00000000000000E+0      0.00000000000000E+0
0.00000000000000E+0      0.00000000000000E+0      1.00000000000000E+0
    0.00000000000000E+0      0.00000000000000E+0      0.00000000000000E+0
   BmNSMass                 3     195         1     1.50000000000000E+2
1.50000000000000E+2      0.00000000000000E+0      0.00000000000000E+0
0.00000000000000E+0      0.00000000000000E+0      1.00000000000000E+0
    0.00000000000000E+0      0.00000000000000E+0      0.00000000000000E+0
   BmNSMass                 3     196         1     1.50000000000000E+2
```

```
1.50000000000000E+2      0.00000000000000E+0      0.00000000000000E+0
0.00000000000000E+0      0.00000000000000E+0      1.00000000000000E+0
    0.00000000000000E+0      0.00000000000000E+0      0.00000000000000E+0
   BmNSMass                 3     197        1      1.50000000000000E+2
1.50000000000000E+2      0.00000000000000E+0      0.00000000000000E+0
0.00000000000000E+0      0.00000000000000E+0      1.00000000000000E+0
    0.00000000000000E+0      0.00000000000000E+0      0.00000000000000E+0
   BmNSMass                 3     198        1      1.50000000000000E+2
1.50000000000000E+2      0.00000000000000E+0      0.00000000000000E+0
0.00000000000000E+0      0.00000000000000E+0      1.00000000000000E+0
    0.00000000000000E+0      0.00000000000000E+0      0.00000000000000E+0
   BmNSMass                 3     199        1      1.50000000000000E+2
1.50000000000000E+2      0.00000000000000E+0      0.00000000000000E+0
0.00000000000000E+0      0.00000000000000E+0      1.00000000000000E+0
    0.00000000000000E+0      0.00000000000000E+0      0.00000000000000E+0
   BmNSMass                 3     200        1      1.50000000000000E+2
1.50000000000000E+2      0.00000000000000E+0      0.00000000000000E+0
0.00000000000000E+0      0.00000000000000E+0      1.00000000000000E+0
    0.00000000000000E+0      0.00000000000000E+0      0.00000000000000E+0
   BmNSMass                 3     201        1      1.50000000000000E+2
1.50000000000000E+2      0.00000000000000E+0      0.00000000000000E+0
0.00000000000000E+0      0.00000000000000E+0      1.00000000000000E+0
    0.00000000000000E+0      0.00000000000000E+0      0.00000000000000E+0
   BmNSMass                 3     202        1      1.50000000000000E+2
1.50000000000000E+2      0.00000000000000E+0      0.00000000000000E+0
0.00000000000000E+0      0.00000000000000E+0      1.00000000000000E+0
    0.00000000000000E+0      0.00000000000000E+0      0.00000000000000E+0
   BmNSMass                 3     203        1      1.50000000000000E+2
1.50000000000000E+2      0.00000000000000E+0      0.00000000000000E+0
0.00000000000000E+0      0.00000000000000E+0      1.00000000000000E+0
    0.00000000000000E+0      0.00000000000000E+0      0.00000000000000E+0
   BmNSMass                 3     204        1      1.50000000000000E+2
1.50000000000000E+2      0.00000000000000E+0      0.00000000000000E+0
0.00000000000000E+0      0.00000000000000E+0      1.00000000000000E+0
    0.00000000000000E+0      0.00000000000000E+0      0.00000000000000E+0
   BmNSMass                 3     205        1      1.50000000000000E+2
1.50000000000000E+2      0.00000000000000E+0      0.00000000000000E+0
0.00000000000000E+0      0.00000000000000E+0      1.00000000000000E+0
    0.00000000000000E+0      0.00000000000000E+0      0.00000000000000E+0
   BmNSMass                 3     206        1      1.50000000000000E+2
1.50000000000000E+2      0.00000000000000E+0      0.00000000000000E+0
0.00000000000000E+0      0.00000000000000E+0      1.00000000000000E+0
    0.00000000000000E+0      0.00000000000000E+0      0.00000000000000E+0
   BmNSMass                 3     207        1      1.50000000000000E+2
1.50000000000000E+2      0.00000000000000E+0      0.00000000000000E+0
0.00000000000000E+0      0.00000000000000E+0      1.00000000000000E+0
    0.00000000000000E+0      0.00000000000000E+0      0.00000000000000E+0
   BmNSMass                 3     208        1      1.50000000000000E+2
1.50000000000000E+2      0.00000000000000E+0      0.00000000000000E+0
0.00000000000000E+0      0.00000000000000E+0      1.00000000000000E+0
    0.00000000000000E+0      0.00000000000000E+0      0.00000000000000E+0
   BmNSMass                 3     209        1      1.50000000000000E+2
1.50000000000000E+2      0.00000000000000E+0      0.00000000000000E+0
0.00000000000000E+0      0.00000000000000E+0      1.00000000000000E+0
```

```
     0.00000000000000E+0      0.00000000000000E+0      0.00000000000000E+0
    BmNSMass                 3      210        1     1.50000000000000E+2
1.50000000000000E+2      0.00000000000000E+0      0.00000000000000E+0
0.00000000000000E+0      0.00000000000000E+0      1.00000000000000E+0
     0.00000000000000E+0      0.00000000000000E+0      0.00000000000000E+0
    BmNSMass                 3      211        1     1.50000000000000E+2
1.50000000000000E+2      0.00000000000000E+0      0.00000000000000E+0
0.00000000000000E+0      0.00000000000000E+0      1.00000000000000E+0
     0.00000000000000E+0      0.00000000000000E+0      0.00000000000000E+0
    BmNSMass                 3      212        1     1.50000000000000E+2
1.50000000000000E+2      0.00000000000000E+0      0.00000000000000E+0
0.00000000000000E+0      0.00000000000000E+0      1.00000000000000E+0
     0.00000000000000E+0      0.00000000000000E+0      0.00000000000000E+0
    BmNSMass                 3      213        1     1.50000000000000E+2
1.50000000000000E+2      0.00000000000000E+0      0.00000000000000E+0
0.00000000000000E+0      0.00000000000000E+0      1.00000000000000E+0
     0.00000000000000E+0      0.00000000000000E+0      0.00000000000000E+0
    BmNSMass                 3      214        1     1.50000000000000E+2
1.50000000000000E+2      0.00000000000000E+0      0.00000000000000E+0
0.00000000000000E+0      0.00000000000000E+0      1.00000000000000E+0
     0.00000000000000E+0      0.00000000000000E+0      0.00000000000000E+0
    BmNSMass                 3      215        1     1.50000000000000E+2
1.50000000000000E+2      0.00000000000000E+0      0.00000000000000E+0
0.00000000000000E+0      0.00000000000000E+0      1.00000000000000E+0
     0.00000000000000E+0      0.00000000000000E+0      0.00000000000000E+0
    BmNSMass                 3      216        1     1.50000000000000E+2
1.50000000000000E+2      0.00000000000000E+0      0.00000000000000E+0
0.00000000000000E+0      0.00000000000000E+0      1.00000000000000E+0
     0.00000000000000E+0      0.00000000000000E+0      0.00000000000000E+0
    BmNSMass                 3      217        1     1.50000000000000E+2
1.50000000000000E+2      0.00000000000000E+0      0.00000000000000E+0
0.00000000000000E+0      0.00000000000000E+0      1.00000000000000E+0
     0.00000000000000E+0      0.00000000000000E+0      0.00000000000000E+0
    BmNSMass                 3      218        1     3.00000000000000E+2
3.00000000000000E+2      0.00000000000000E+0      0.00000000000000E+0
0.00000000000000E+0      0.00000000000000E+0      1.00000000000000E+0
     0.00000000000000E+0      0.00000000000000E+0      0.00000000000000E+0
    BmNSMass                 3      219        1     3.00000000000000E+2
3.00000000000000E+2      0.00000000000000E+0      0.00000000000000E+0
0.00000000000000E+0      0.00000000000000E+0      1.00000000000000E+0
     0.00000000000000E+0      0.00000000000000E+0      0.00000000000000E+0
    BmNSMass                 3      220        1     3.00000000000000E+2
3.00000000000000E+2      0.00000000000000E+0      0.00000000000000E+0
0.00000000000000E+0      0.00000000000000E+0      1.00000000000000E+0
     0.00000000000000E+0      0.00000000000000E+0      0.00000000000000E+0
    BmNSMass                 3      221        1     3.00000000000000E+2
3.00000000000000E+2      0.00000000000000E+0      0.00000000000000E+0
0.00000000000000E+0      0.00000000000000E+0      1.00000000000000E+0
     0.00000000000000E+0      0.00000000000000E+0      0.00000000000000E+0
    BmNSMass                 3      222        1     3.00000000000000E+2
3.00000000000000E+2      0.00000000000000E+0      0.00000000000000E+0
0.00000000000000E+0      0.00000000000000E+0      1.00000000000000E+0
     0.00000000000000E+0      0.00000000000000E+0      0.00000000000000E+0
    BmNSMass                 3      223        1     3.00000000000000E+2
```

```
3.00000000000000E+2      0.00000000000000E+0      0.00000000000000E+0
0.00000000000000E+0      0.00000000000000E+0      1.00000000000000E+0
    0.00000000000000E+0      0.00000000000000E+0      0.00000000000000E+0
   BmNSMass                 3     224       1     3.00000000000000E+2
3.00000000000000E+2      0.00000000000000E+0      0.00000000000000E+0
0.00000000000000E+0      0.00000000000000E+0      1.00000000000000E+0
    0.00000000000000E+0      0.00000000000000E+0      0.00000000000000E+0
   BmNSMass                 3     225       1     3.00000000000000E+2
3.00000000000000E+2      0.00000000000000E+0      0.00000000000000E+0
0.00000000000000E+0      0.00000000000000E+0      1.00000000000000E+0
    0.00000000000000E+0      0.00000000000000E+0      0.00000000000000E+0
   BmNSMass                 3     226       1     3.00000000000000E+2
3.00000000000000E+2      0.00000000000000E+0      0.00000000000000E+0
0.00000000000000E+0      0.00000000000000E+0      1.00000000000000E+0
    0.00000000000000E+0      0.00000000000000E+0      0.00000000000000E+0
   BmNSMass                 3     227       1     3.00000000000000E+2
3.00000000000000E+2      0.00000000000000E+0      0.00000000000000E+0
0.00000000000000E+0      0.00000000000000E+0      1.00000000000000E+0
    0.00000000000000E+0      0.00000000000000E+0      0.00000000000000E+0
   BmNSMass                 3     228       1     3.00000000000000E+2
3.00000000000000E+2      0.00000000000000E+0      0.00000000000000E+0
0.00000000000000E+0      0.00000000000000E+0      1.00000000000000E+0
    0.00000000000000E+0      0.00000000000000E+0      0.00000000000000E+0
   BmNSMass                 3     229       1     3.00000000000000E+2
3.00000000000000E+2      0.00000000000000E+0      0.00000000000000E+0
0.00000000000000E+0      0.00000000000000E+0      1.00000000000000E+0
    0.00000000000000E+0      0.00000000000000E+0      0.00000000000000E+0
   BmNSMass                 3     230       1     3.00000000000000E+2
3.00000000000000E+2      0.00000000000000E+0      0.00000000000000E+0
0.00000000000000E+0      0.00000000000000E+0      1.00000000000000E+0
    0.00000000000000E+0      0.00000000000000E+0      0.00000000000000E+0
   BmNSMass                 3     231       1     3.00000000000000E+2
3.00000000000000E+2      0.00000000000000E+0      0.00000000000000E+0
0.00000000000000E+0      0.00000000000000E+0      1.00000000000000E+0
    0.00000000000000E+0      0.00000000000000E+0      0.00000000000000E+0
   BmNSMass                 3     232       1     3.00000000000000E+2
3.00000000000000E+2      0.00000000000000E+0      0.00000000000000E+0
0.00000000000000E+0      0.00000000000000E+0      1.00000000000000E+0
    0.00000000000000E+0      0.00000000000000E+0      0.00000000000000E+0
   BmNSMass                 3     233       1     3.00000000000000E+2
3.00000000000000E+2      0.00000000000000E+0      0.00000000000000E+0
0.00000000000000E+0      0.00000000000000E+0      1.00000000000000E+0
    0.00000000000000E+0      0.00000000000000E+0      0.00000000000000E+0
   BmNSMass                 3     234       1     3.00000000000000E+2
3.00000000000000E+2      0.00000000000000E+0      0.00000000000000E+0
0.00000000000000E+0      0.00000000000000E+0      1.00000000000000E+0
    0.00000000000000E+0      0.00000000000000E+0      0.00000000000000E+0
   BmNSMass                 3     235       1     3.00000000000000E+2
3.00000000000000E+2      0.00000000000000E+0      0.00000000000000E+0
0.00000000000000E+0      0.00000000000000E+0      1.00000000000000E+0
    0.00000000000000E+0      0.00000000000000E+0      0.00000000000000E+0
   BmNSMass                 3     236       1     3.00000000000000E+2
3.00000000000000E+2      0.00000000000000E+0      0.00000000000000E+0
0.00000000000000E+0      0.00000000000000E+0      1.00000000000000E+0
```

```
    0.00000000000000E+0      0.00000000000000E+0      0.00000000000000E+0
   BmNSMass                 3     237       1     3.00000000000000E+2
3.00000000000000E+2      0.00000000000000E+0      0.00000000000000E+0
0.00000000000000E+0      0.00000000000000E+0      1.00000000000000E+0
    0.00000000000000E+0      0.00000000000000E+0      0.00000000000000E+0
   BmNSMass                 3     238       1     3.00000000000000E+2
3.00000000000000E+2      0.00000000000000E+0      0.00000000000000E+0
0.00000000000000E+0      0.00000000000000E+0      1.00000000000000E+0
    0.00000000000000E+0      0.00000000000000E+0      0.00000000000000E+0
   BmNSMass                 3     239       1     3.00000000000000E+2
3.00000000000000E+2      0.00000000000000E+0      0.00000000000000E+0
0.00000000000000E+0      0.00000000000000E+0      1.00000000000000E+0
    0.00000000000000E+0      0.00000000000000E+0      0.00000000000000E+0
   BmNSMass                 3     240       1     3.00000000000000E+2
3.00000000000000E+2      0.00000000000000E+0      0.00000000000000E+0
0.00000000000000E+0      0.00000000000000E+0      1.00000000000000E+0
    0.00000000000000E+0      0.00000000000000E+0      0.00000000000000E+0
   BmNSMass                 3     241       1     3.00000000000000E+2
3.00000000000000E+2      0.00000000000000E+0      0.00000000000000E+0
0.00000000000000E+0      0.00000000000000E+0      1.00000000000000E+0
    0.00000000000000E+0      0.00000000000000E+0      0.00000000000000E+0
   BmNSMass                 3     242       1     3.00000000000000E+2
3.00000000000000E+2      0.00000000000000E+0      0.00000000000000E+0
0.00000000000000E+0      0.00000000000000E+0      1.00000000000000E+0
    0.00000000000000E+0      0.00000000000000E+0      0.00000000000000E+0
   BmNSMass                 3     243       1     3.00000000000000E+2
3.00000000000000E+2      0.00000000000000E+0      0.00000000000000E+0
0.00000000000000E+0      0.00000000000000E+0      1.00000000000000E+0
    0.00000000000000E+0      0.00000000000000E+0      0.00000000000000E+0
   BmNSMass                 3     244       1     3.00000000000000E+2
3.00000000000000E+2      0.00000000000000E+0      0.00000000000000E+0
0.00000000000000E+0      0.00000000000000E+0      1.00000000000000E+0
    0.00000000000000E+0      0.00000000000000E+0      0.00000000000000E+0
   BmNSMass                 3     245       1     3.00000000000000E+2
3.00000000000000E+2      0.00000000000000E+0      0.00000000000000E+0
0.00000000000000E+0      0.00000000000000E+0      1.00000000000000E+0
    0.00000000000000E+0      0.00000000000000E+0      0.00000000000000E+0
   BmNSMass                 3     246       1     3.00000000000000E+2
3.00000000000000E+2      0.00000000000000E+0      0.00000000000000E+0
0.00000000000000E+0      0.00000000000000E+0      1.00000000000000E+0
    0.00000000000000E+0      0.00000000000000E+0      0.00000000000000E+0
   BmNSMass                 3     247       1     3.00000000000000E+2
3.00000000000000E+2      0.00000000000000E+0      0.00000000000000E+0
0.00000000000000E+0      0.00000000000000E+0      1.00000000000000E+0
    0.00000000000000E+0      0.00000000000000E+0      0.00000000000000E+0
   BmNSMass                 3     248       1     3.00000000000000E+2
3.00000000000000E+2      0.00000000000000E+0      0.00000000000000E+0
0.00000000000000E+0      0.00000000000000E+0      1.00000000000000E+0
    0.00000000000000E+0      0.00000000000000E+0      0.00000000000000E+0
   BmNSMass                 3     249       1     3.00000000000000E+2
3.00000000000000E+2      0.00000000000000E+0      0.00000000000000E+0
0.00000000000000E+0      0.00000000000000E+0      1.00000000000000E+0
    0.00000000000000E+0      0.00000000000000E+0      0.00000000000000E+0
   BmNSMass                 3     250       1     3.00000000000000E+2
```

```
3.00000000000000E+2      0.00000000000000E+0      0.00000000000000E+0
0.00000000000000E+0      0.00000000000000E+0      1.00000000000000E+0
    0.00000000000000E+0      0.00000000000000E+0      0.00000000000000E+0
   BmNSMass                 3     251         1     3.00000000000000E+2
3.00000000000000E+2      0.00000000000000E+0      0.00000000000000E+0
0.00000000000000E+0      0.00000000000000E+0      1.00000000000000E+0
    0.00000000000000E+0      0.00000000000000E+0      0.00000000000000E+0
   BmNSMass                 3     252         1     3.00000000000000E+2
3.00000000000000E+2      0.00000000000000E+0      0.00000000000000E+0
0.00000000000000E+0      0.00000000000000E+0      1.00000000000000E+0
    0.00000000000000E+0      0.00000000000000E+0      0.00000000000000E+0
   BmNSMass                 3     253         1     3.00000000000000E+2
3.00000000000000E+2      0.00000000000000E+0      0.00000000000000E+0
0.00000000000000E+0      0.00000000000000E+0      1.00000000000000E+0
    0.00000000000000E+0      0.00000000000000E+0      0.00000000000000E+0
   BmNSMass                 3     254         1     3.00000000000000E+2
3.00000000000000E+2      0.00000000000000E+0      0.00000000000000E+0
0.00000000000000E+0      0.00000000000000E+0      1.00000000000000E+0
    0.00000000000000E+0      0.00000000000000E+0      0.00000000000000E+0
   BmNSMass                 3     255         1     3.00000000000000E+2
3.00000000000000E+2      0.00000000000000E+0      0.00000000000000E+0
0.00000000000000E+0      0.00000000000000E+0      1.00000000000000E+0
    0.00000000000000E+0      0.00000000000000E+0      0.00000000000000E+0
   BmNSMass                 3     256         1     3.00000000000000E+2
3.00000000000000E+2      0.00000000000000E+0      0.00000000000000E+0
0.00000000000000E+0      0.00000000000000E+0      1.00000000000000E+0
    0.00000000000000E+0      0.00000000000000E+0      0.00000000000000E+0
   BmNSMass                 3     257         1     3.00000000000000E+2
3.00000000000000E+2      0.00000000000000E+0      0.00000000000000E+0
0.00000000000000E+0      0.00000000000000E+0      1.00000000000000E+0
    0.00000000000000E+0      0.00000000000000E+0      0.00000000000000E+0
   BmNSMass                 3     258         1     3.00000000000000E+2
3.00000000000000E+2      0.00000000000000E+0      0.00000000000000E+0
0.00000000000000E+0      0.00000000000000E+0      1.00000000000000E+0
    0.00000000000000E+0      0.00000000000000E+0      0.00000000000000E+0
   BmNSMass                 3     259         1     3.00000000000000E+2
3.00000000000000E+2      0.00000000000000E+0      0.00000000000000E+0
0.00000000000000E+0      0.00000000000000E+0      1.00000000000000E+0
    0.00000000000000E+0      0.00000000000000E+0      0.00000000000000E+0
   BmNSMass                 3     260         1     3.00000000000000E+2
3.00000000000000E+2      0.00000000000000E+0      0.00000000000000E+0
0.00000000000000E+0      0.00000000000000E+0      1.00000000000000E+0
    0.00000000000000E+0      0.00000000000000E+0      0.00000000000000E+0
   BmNSMass                 3     261         1     3.00000000000000E+2
3.00000000000000E+2      0.00000000000000E+0      0.00000000000000E+0
0.00000000000000E+0      0.00000000000000E+0      1.00000000000000E+0
    0.00000000000000E+0      0.00000000000000E+0      0.00000000000000E+0
   BmNSMass                 3     262         1     3.00000000000000E+2
3.00000000000000E+2      0.00000000000000E+0      0.00000000000000E+0
0.00000000000000E+0      0.00000000000000E+0      1.00000000000000E+0
    0.00000000000000E+0      0.00000000000000E+0      0.00000000000000E+0
   BmNSMass                 3     263         1     3.00000000000000E+2
3.00000000000000E+2      0.00000000000000E+0      0.00000000000000E+0
0.00000000000000E+0      0.00000000000000E+0      1.00000000000000E+0
```

```
    0.00000000000000E+0      0.00000000000000E+0      0.00000000000000E+0
   BmNSMass                3     264       1     3.00000000000000E+2
3.00000000000000E+2      0.00000000000000E+0      0.00000000000000E+0
0.00000000000000E+0      0.00000000000000E+0      1.00000000000000E+0
    0.00000000000000E+0      0.00000000000000E+0      0.00000000000000E+0
   BmNSMass                3     265       1     3.00000000000000E+2
3.00000000000000E+2      0.00000000000000E+0      0.00000000000000E+0
0.00000000000000E+0      0.00000000000000E+0      1.00000000000000E+0
    0.00000000000000E+0      0.00000000000000E+0      0.00000000000000E+0
   BmNSMass                3     266       1     3.00000000000000E+2
3.00000000000000E+2      0.00000000000000E+0      0.00000000000000E+0
0.00000000000000E+0      0.00000000000000E+0      1.00000000000000E+0
    0.00000000000000E+0      0.00000000000000E+0      0.00000000000000E+0
   BmNSMass                3     267       1     3.00000000000000E+2
3.00000000000000E+2      0.00000000000000E+0      0.00000000000000E+0
0.00000000000000E+0      0.00000000000000E+0      1.00000000000000E+0
    0.00000000000000E+0      0.00000000000000E+0      0.00000000000000E+0
   BmNSMass                3     268       1     3.00000000000000E+2
3.00000000000000E+2      0.00000000000000E+0      0.00000000000000E+0
0.00000000000000E+0      0.00000000000000E+0      1.00000000000000E+0
    0.00000000000000E+0      0.00000000000000E+0      0.00000000000000E+0
   BmNSMass                3     269       1     3.00000000000000E+2
3.00000000000000E+2      0.00000000000000E+0      0.00000000000000E+0
0.00000000000000E+0      0.00000000000000E+0      1.00000000000000E+0
    0.00000000000000E+0      0.00000000000000E+0      0.00000000000000E+0
   BmNSMass                3     270       1     3.00000000000000E+2
3.00000000000000E+2      0.00000000000000E+0      0.00000000000000E+0
0.00000000000000E+0      0.00000000000000E+0      1.00000000000000E+0
    0.00000000000000E+0      0.00000000000000E+0      0.00000000000000E+0
   BmNSMass                3     271       1     3.00000000000000E+2
3.00000000000000E+2      0.00000000000000E+0      0.00000000000000E+0
0.00000000000000E+0      0.00000000000000E+0      1.00000000000000E+0
    0.00000000000000E+0      0.00000000000000E+0      0.00000000000000E+0
   BmNSMass                3     272       1     3.00000000000000E+2
3.00000000000000E+2      0.00000000000000E+0      0.00000000000000E+0
0.00000000000000E+0      0.00000000000000E+0      1.00000000000000E+0
    0.00000000000000E+0      0.00000000000000E+0      0.00000000000000E+0
   BmNSMass                3     273       1     3.00000000000000E+2
3.00000000000000E+2      0.00000000000000E+0      0.00000000000000E+0
0.00000000000000E+0      0.00000000000000E+0      1.00000000000000E+0
    0.00000000000000E+0      0.00000000000000E+0      0.00000000000000E+0
   BmNSMass                3     274       1     3.00000000000000E+2
3.00000000000000E+2      0.00000000000000E+0      0.00000000000000E+0
0.00000000000000E+0      0.00000000000000E+0      1.00000000000000E+0
    0.00000000000000E+0      0.00000000000000E+0      0.00000000000000E+0
   BmNSMass                3     275       1     3.00000000000000E+2
3.00000000000000E+2      0.00000000000000E+0      0.00000000000000E+0
0.00000000000000E+0      0.00000000000000E+0      1.00000000000000E+0
    0.00000000000000E+0      0.00000000000000E+0      0.00000000000000E+0
   BmNSMass                3     276       1     3.00000000000000E+2
3.00000000000000E+2      0.00000000000000E+0      0.00000000000000E+0
0.00000000000000E+0      0.00000000000000E+0      1.00000000000000E+0
    0.00000000000000E+0      0.00000000000000E+0      0.00000000000000E+0
   BmNSMass                3     277       1     3.00000000000000E+2
```

```
3.00000000000000E+2      0.00000000000000E+0      0.00000000000000E+0
0.00000000000000E+0      0.00000000000000E+0      1.00000000000000E+0
    0.00000000000000E+0      0.00000000000000E+0      0.00000000000000E+0
   BmNSMass                3     278        1      3.00000000000000E+2
3.00000000000000E+2      0.00000000000000E+0      0.00000000000000E+0
0.00000000000000E+0      0.00000000000000E+0      1.00000000000000E+0
    0.00000000000000E+0      0.00000000000000E+0      0.00000000000000E+0
   BmNSMass                3     279        1      3.00000000000000E+2
3.00000000000000E+2      0.00000000000000E+0      0.00000000000000E+0
0.00000000000000E+0      0.00000000000000E+0      1.00000000000000E+0
    0.00000000000000E+0      0.00000000000000E+0      0.00000000000000E+0
   BmNSMass                3     280        1      3.00000000000000E+2
3.00000000000000E+2      0.00000000000000E+0      0.00000000000000E+0
0.00000000000000E+0      0.00000000000000E+0      1.00000000000000E+0
    0.00000000000000E+0      0.00000000000000E+0      0.00000000000000E+0
   BmNSMass                3     281        1      3.00000000000000E+2
3.00000000000000E+2      0.00000000000000E+0      0.00000000000000E+0
0.00000000000000E+0      0.00000000000000E+0      1.00000000000000E+0
    0.00000000000000E+0      0.00000000000000E+0      0.00000000000000E+0
   BmNSMass                3     282        1      3.00000000000000E+2
3.00000000000000E+2      0.00000000000000E+0      0.00000000000000E+0
0.00000000000000E+0      0.00000000000000E+0      1.00000000000000E+0
    0.00000000000000E+0      0.00000000000000E+0      0.00000000000000E+0
   BmNSMass                3     283        1      3.00000000000000E+2
3.00000000000000E+2      0.00000000000000E+0      0.00000000000000E+0
0.00000000000000E+0      0.00000000000000E+0      1.00000000000000E+0
    0.00000000000000E+0      0.00000000000000E+0      0.00000000000000E+0
   BmNSMass                3     284        1      3.00000000000000E+2
3.00000000000000E+2      0.00000000000000E+0      0.00000000000000E+0
0.00000000000000E+0      0.00000000000000E+0      1.00000000000000E+0
    0.00000000000000E+0      0.00000000000000E+0      0.00000000000000E+0
   BmNSMass                3     285        1      3.00000000000000E+2
3.00000000000000E+2      0.00000000000000E+0      0.00000000000000E+0
0.00000000000000E+0      0.00000000000000E+0      1.00000000000000E+0
    0.00000000000000E+0      0.00000000000000E+0      0.00000000000000E+0
   BmNSMass                3     286        1      3.00000000000000E+2
3.00000000000000E+2      0.00000000000000E+0      0.00000000000000E+0
0.00000000000000E+0      0.00000000000000E+0      1.00000000000000E+0
    0.00000000000000E+0      0.00000000000000E+0      0.00000000000000E+0
   BmNSMass                3     287        1      3.00000000000000E+2
3.00000000000000E+2      0.00000000000000E+0      0.00000000000000E+0
0.00000000000000E+0      0.00000000000000E+0      1.00000000000000E+0
    0.00000000000000E+0      0.00000000000000E+0      0.00000000000000E+0
   BmNSMass                3     288        1      3.00000000000000E+2
3.00000000000000E+2      0.00000000000000E+0      0.00000000000000E+0
0.00000000000000E+0      0.00000000000000E+0      1.00000000000000E+0
    0.00000000000000E+0      0.00000000000000E+0      0.00000000000000E+0
   BmNSMass                3     289        1      3.00000000000000E+2
3.00000000000000E+2      0.00000000000000E+0      0.00000000000000E+0
0.00000000000000E+0      0.00000000000000E+0      1.00000000000000E+0
    0.00000000000000E+0      0.00000000000000E+0      0.00000000000000E+0
   BmNSMass                3     290        1      3.00000000000000E+2
3.00000000000000E+2      0.00000000000000E+0      0.00000000000000E+0
0.00000000000000E+0      0.00000000000000E+0      1.00000000000000E+0
```

```
    0.00000000000000E+0      0.00000000000000E+0      0.00000000000000E+0
   BmNSMass                  3     291        1     3.00000000000000E+2
3.00000000000000E+2      0.00000000000000E+0      0.00000000000000E+0
0.00000000000000E+0      0.00000000000000E+0      1.00000000000000E+0
    0.00000000000000E+0      0.00000000000000E+0      0.00000000000000E+0
   BmNSMass                  3     292        1     3.00000000000000E+2
3.00000000000000E+2      0.00000000000000E+0      0.00000000000000E+0
0.00000000000000E+0      0.00000000000000E+0      1.00000000000000E+0
    0.00000000000000E+0      0.00000000000000E+0      0.00000000000000E+0
   BmNSMass                  3     293        1     3.00000000000000E+2
3.00000000000000E+2      0.00000000000000E+0      0.00000000000000E+0
0.00000000000000E+0      0.00000000000000E+0      1.00000000000000E+0
    0.00000000000000E+0      0.00000000000000E+0      0.00000000000000E+0
   BmNSMass                  3     294        1     3.00000000000000E+2
3.00000000000000E+2      0.00000000000000E+0      0.00000000000000E+0
0.00000000000000E+0      0.00000000000000E+0      1.00000000000000E+0
    0.00000000000000E+0      0.00000000000000E+0      0.00000000000000E+0
   BmNSMass                  3     295        1     3.00000000000000E+2
3.00000000000000E+2      0.00000000000000E+0      0.00000000000000E+0
0.00000000000000E+0      0.00000000000000E+0      1.00000000000000E+0
    0.00000000000000E+0      0.00000000000000E+0      0.00000000000000E+0
   BmNSMass                  3     296        1     3.00000000000000E+2
3.00000000000000E+2      0.00000000000000E+0      0.00000000000000E+0
0.00000000000000E+0      0.00000000000000E+0      1.00000000000000E+0
    0.00000000000000E+0      0.00000000000000E+0      0.00000000000000E+0
   BmNSMass                  3     297        1     3.00000000000000E+2
3.00000000000000E+2      0.00000000000000E+0      0.00000000000000E+0
0.00000000000000E+0      0.00000000000000E+0      1.00000000000000E+0
    0.00000000000000E+0      0.00000000000000E+0      0.00000000000000E+0
   BmNSMass                  3     298        1     3.00000000000000E+2
3.00000000000000E+2      0.00000000000000E+0      0.00000000000000E+0
0.00000000000000E+0      0.00000000000000E+0      1.00000000000000E+0
    0.00000000000000E+0      0.00000000000000E+0      0.00000000000000E+0
   BmNSMass                  3     299        1     3.00000000000000E+2
3.00000000000000E+2      0.00000000000000E+0      0.00000000000000E+0
0.00000000000000E+0      0.00000000000000E+0      1.00000000000000E+0
    0.00000000000000E+0      0.00000000000000E+0      0.00000000000000E+0
   BmNSMass                  3     300        1     3.00000000000000E+2
3.00000000000000E+2      0.00000000000000E+0      0.00000000000000E+0
0.00000000000000E+0      0.00000000000000E+0      1.00000000000000E+0
    0.00000000000000E+0      0.00000000000000E+0      0.00000000000000E+0
   BmNSMass                  3     301        1     3.00000000000000E+2
3.00000000000000E+2      0.00000000000000E+0      0.00000000000000E+0
0.00000000000000E+0      0.00000000000000E+0      1.00000000000000E+0
    0.00000000000000E+0      0.00000000000000E+0      0.00000000000000E+0
   BmNSMass                  3     302        1     3.00000000000000E+2
3.00000000000000E+2      0.00000000000000E+0      0.00000000000000E+0
0.00000000000000E+0      0.00000000000000E+0      1.00000000000000E+0
    0.00000000000000E+0      0.00000000000000E+0      0.00000000000000E+0
   BmNSMass                  3     303        1     3.00000000000000E+2
3.00000000000000E+2      0.00000000000000E+0      0.00000000000000E+0
0.00000000000000E+0      0.00000000000000E+0      1.00000000000000E+0
    0.00000000000000E+0      0.00000000000000E+0      0.00000000000000E+0
   BmNSMass                  3     304        1     3.00000000000000E+2
```

```
3.00000000000000E+2      0.00000000000000E+0      0.00000000000000E+0
0.00000000000000E+0      0.00000000000000E+0      1.00000000000000E+0
    0.00000000000000E+0      0.00000000000000E+0      0.00000000000000E+0
   BmNSMass                 3     305       1     3.00000000000000E+2
3.00000000000000E+2      0.00000000000000E+0      0.00000000000000E+0
0.00000000000000E+0      0.00000000000000E+0      1.00000000000000E+0
    0.00000000000000E+0      0.00000000000000E+0      0.00000000000000E+0
   BmNSMass                 3     306       1     3.00000000000000E+2
3.00000000000000E+2      0.00000000000000E+0      0.00000000000000E+0
0.00000000000000E+0      0.00000000000000E+0      1.00000000000000E+0
    0.00000000000000E+0      0.00000000000000E+0      0.00000000000000E+0
   BmNSMass                 3     307       1     3.00000000000000E+2
3.00000000000000E+2      0.00000000000000E+0      0.00000000000000E+0
0.00000000000000E+0      0.00000000000000E+0      1.00000000000000E+0
    0.00000000000000E+0      0.00000000000000E+0      0.00000000000000E+0
   BmNSMass                 3     308       1     3.00000000000000E+2
3.00000000000000E+2      0.00000000000000E+0      0.00000000000000E+0
0.00000000000000E+0      0.00000000000000E+0      1.00000000000000E+0
    0.00000000000000E+0      0.00000000000000E+0      0.00000000000000E+0
   BmNSMass                 3     309       1     3.00000000000000E+2
3.00000000000000E+2      0.00000000000000E+0      0.00000000000000E+0
0.00000000000000E+0      0.00000000000000E+0      1.00000000000000E+0
    0.00000000000000E+0      0.00000000000000E+0      0.00000000000000E+0
   BmNSMass                 3     310       1     3.00000000000000E+2
3.00000000000000E+2      0.00000000000000E+0      0.00000000000000E+0
0.00000000000000E+0      0.00000000000000E+0      1.00000000000000E+0
    0.00000000000000E+0      0.00000000000000E+0      0.00000000000000E+0
   BmNSMass                 3     311       1     3.00000000000000E+2
3.00000000000000E+2      0.00000000000000E+0      0.00000000000000E+0
0.00000000000000E+0      0.00000000000000E+0      1.00000000000000E+0
    0.00000000000000E+0      0.00000000000000E+0      0.00000000000000E+0
   BmNSMass                 3     312       1     3.00000000000000E+2
3.00000000000000E+2      0.00000000000000E+0      0.00000000000000E+0
0.00000000000000E+0      0.00000000000000E+0      1.00000000000000E+0
    0.00000000000000E+0      0.00000000000000E+0      0.00000000000000E+0
   BmNSMass                 3     313       1     3.00000000000000E+2
3.00000000000000E+2      0.00000000000000E+0      0.00000000000000E+0
0.00000000000000E+0      0.00000000000000E+0      1.00000000000000E+0
    0.00000000000000E+0      0.00000000000000E+0      0.00000000000000E+0
   BmNSMass                 3     314       1     3.00000000000000E+2
3.00000000000000E+2      0.00000000000000E+0      0.00000000000000E+0
0.00000000000000E+0      0.00000000000000E+0      1.00000000000000E+0
    0.00000000000000E+0      0.00000000000000E+0      0.00000000000000E+0
   BmNSMass                 3     315       1     3.00000000000000E+2
3.00000000000000E+2      0.00000000000000E+0      0.00000000000000E+0
0.00000000000000E+0      0.00000000000000E+0      1.00000000000000E+0
    0.00000000000000E+0      0.00000000000000E+0      0.00000000000000E+0
   BmNSMass                 3     316       1     3.00000000000000E+2
3.00000000000000E+2      0.00000000000000E+0      0.00000000000000E+0
0.00000000000000E+0      0.00000000000000E+0      1.00000000000000E+0
    0.00000000000000E+0      0.00000000000000E+0      0.00000000000000E+0
   BmNSMass                 3     317       1     3.00000000000000E+2
3.00000000000000E+2      0.00000000000000E+0      0.00000000000000E+0
0.00000000000000E+0      0.00000000000000E+0      1.00000000000000E+0
```

```
    0.00000000000000E+0      0.00000000000000E+0      0.00000000000000E+0
   BmNSMass                 3     318       1     3.00000000000000E+2
3.00000000000000E+2      0.00000000000000E+0      0.00000000000000E+0
0.00000000000000E+0      0.00000000000000E+0      1.00000000000000E+0
    0.00000000000000E+0      0.00000000000000E+0      0.00000000000000E+0
   BmNSMass                 3     319       1     3.00000000000000E+2
3.00000000000000E+2      0.00000000000000E+0      0.00000000000000E+0
0.00000000000000E+0      0.00000000000000E+0      1.00000000000000E+0
    0.00000000000000E+0      0.00000000000000E+0      0.00000000000000E+0
   BmNSMass                 3     320       1     3.00000000000000E+2
3.00000000000000E+2      0.00000000000000E+0      0.00000000000000E+0
0.00000000000000E+0      0.00000000000000E+0      1.00000000000000E+0
    0.00000000000000E+0      0.00000000000000E+0      0.00000000000000E+0
   BmNSMass                 3     321       1     3.00000000000000E+2
3.00000000000000E+2      0.00000000000000E+0      0.00000000000000E+0
0.00000000000000E+0      0.00000000000000E+0      1.00000000000000E+0
    0.00000000000000E+0      0.00000000000000E+0      0.00000000000000E+0
   BmNSMass                 3     322       1     3.00000000000000E+2
3.00000000000000E+2      0.00000000000000E+0      0.00000000000000E+0
0.00000000000000E+0      0.00000000000000E+0      1.00000000000000E+0
    0.00000000000000E+0      0.00000000000000E+0      0.00000000000000E+0
   BmNSMass                 3     323       1     3.00000000000000E+2
3.00000000000000E+2      0.00000000000000E+0      0.00000000000000E+0
0.00000000000000E+0      0.00000000000000E+0      1.00000000000000E+0
    0.00000000000000E+0      0.00000000000000E+0      0.00000000000000E+0
   BmNSMass                 3     324       1     3.00000000000000E+2
3.00000000000000E+2      0.00000000000000E+0      0.00000000000000E+0
0.00000000000000E+0      0.00000000000000E+0      1.00000000000000E+0
    0.00000000000000E+0      0.00000000000000E+0      0.00000000000000E+0
   BmNSMass                 3     325       1     3.00000000000000E+2
3.00000000000000E+2      0.00000000000000E+0      0.00000000000000E+0
0.00000000000000E+0      0.00000000000000E+0      1.00000000000000E+0
    0.00000000000000E+0      0.00000000000000E+0      0.00000000000000E+0
   BmNSMass                 3     326       1     3.00000000000000E+2
3.00000000000000E+2      0.00000000000000E+0      0.00000000000000E+0
0.00000000000000E+0      0.00000000000000E+0      1.00000000000000E+0
    0.00000000000000E+0      0.00000000000000E+0      0.00000000000000E+0
   BmNSMass                 3     327       1     3.00000000000000E+2
3.00000000000000E+2      0.00000000000000E+0      0.00000000000000E+0
0.00000000000000E+0      0.00000000000000E+0      1.00000000000000E+0
    0.00000000000000E+0      0.00000000000000E+0      0.00000000000000E+0
   BmNSMass                 3     328       1     3.00000000000000E+2
3.00000000000000E+2      0.00000000000000E+0      0.00000000000000E+0
0.00000000000000E+0      0.00000000000000E+0      1.00000000000000E+0
    0.00000000000000E+0      0.00000000000000E+0      0.00000000000000E+0
   BmNSMass                 3     329       1     3.00000000000000E+2
3.00000000000000E+2      0.00000000000000E+0      0.00000000000000E+0
0.00000000000000E+0      0.00000000000000E+0      1.00000000000000E+0
    0.00000000000000E+0      0.00000000000000E+0      0.00000000000000E+0
   BmNSMass                 3     330       1     3.00000000000000E+2
3.00000000000000E+2      0.00000000000000E+0      0.00000000000000E+0
0.00000000000000E+0      0.00000000000000E+0      1.00000000000000E+0
    0.00000000000000E+0      0.00000000000000E+0      0.00000000000000E+0
   BmNSMass                 3     331       1     3.00000000000000E+2
```

```
3.00000000000000E+2      0.00000000000000E+0      0.00000000000000E+0
0.00000000000000E+0      0.00000000000000E+0      1.00000000000000E+0
    0.00000000000000E+0      0.00000000000000E+0      0.00000000000000E+0
   BmNSMass                 3     332         1     3.00000000000000E+2
3.00000000000000E+2      0.00000000000000E+0      0.00000000000000E+0
0.00000000000000E+0      0.00000000000000E+0      1.00000000000000E+0
    0.00000000000000E+0      0.00000000000000E+0      0.00000000000000E+0
   BmNSMass                 3     333         1     3.00000000000000E+2
3.00000000000000E+2      0.00000000000000E+0      0.00000000000000E+0
0.00000000000000E+0      0.00000000000000E+0      1.00000000000000E+0
    0.00000000000000E+0      0.00000000000000E+0      0.00000000000000E+0
   BmNSMass                 3     334         1     3.00000000000000E+2
3.00000000000000E+2      0.00000000000000E+0      0.00000000000000E+0
0.00000000000000E+0      0.00000000000000E+0      1.00000000000000E+0
    0.00000000000000E+0      0.00000000000000E+0      0.00000000000000E+0
   BmNSMass                 3     335         1     3.00000000000000E+2
3.00000000000000E+2      0.00000000000000E+0      0.00000000000000E+0
0.00000000000000E+0      0.00000000000000E+0      1.00000000000000E+0
    0.00000000000000E+0      0.00000000000000E+0      0.00000000000000E+0
   BmNSMass                 3     336         1     3.00000000000000E+2
3.00000000000000E+2      0.00000000000000E+0      0.00000000000000E+0
0.00000000000000E+0      0.00000000000000E+0      1.00000000000000E+0
    0.00000000000000E+0      0.00000000000000E+0      0.00000000000000E+0
   BmNSMass                 3     337         1     3.00000000000000E+2
3.00000000000000E+2      0.00000000000000E+0      0.00000000000000E+0
0.00000000000000E+0      0.00000000000000E+0      1.00000000000000E+0
    0.00000000000000E+0      0.00000000000000E+0      0.00000000000000E+0
   BmNSMass                 3     338         1     3.00000000000000E+2
3.00000000000000E+2      0.00000000000000E+0      0.00000000000000E+0
0.00000000000000E+0      0.00000000000000E+0      1.00000000000000E+0
    0.00000000000000E+0      0.00000000000000E+0      0.00000000000000E+0
   BmNSMass                 3     339         1     3.00000000000000E+2
3.00000000000000E+2      0.00000000000000E+0      0.00000000000000E+0
0.00000000000000E+0      0.00000000000000E+0      1.00000000000000E+0
    0.00000000000000E+0      0.00000000000000E+0      0.00000000000000E+0
   BmNSMass                 3     340         1     3.00000000000000E+2
3.00000000000000E+2      0.00000000000000E+0      0.00000000000000E+0
0.00000000000000E+0      0.00000000000000E+0      1.00000000000000E+0
    0.00000000000000E+0      0.00000000000000E+0      0.00000000000000E+0
   BmNSMass                 3     341         1     3.00000000000000E+2
3.00000000000000E+2      0.00000000000000E+0      0.00000000000000E+0
0.00000000000000E+0      0.00000000000000E+0      1.00000000000000E+0
    0.00000000000000E+0      0.00000000000000E+0      0.00000000000000E+0
   BmNSMass                 3     342         1     3.00000000000000E+2
3.00000000000000E+2      0.00000000000000E+0      0.00000000000000E+0
0.00000000000000E+0      0.00000000000000E+0      1.00000000000000E+0
    0.00000000000000E+0      0.00000000000000E+0      0.00000000000000E+0
   BmNSMass                 3     343         1     3.00000000000000E+2
3.00000000000000E+2      0.00000000000000E+0      0.00000000000000E+0
0.00000000000000E+0      0.00000000000000E+0      1.00000000000000E+0
    0.00000000000000E+0      0.00000000000000E+0      0.00000000000000E+0
   BmNSMass                 3     344         1     3.00000000000000E+2
3.00000000000000E+2      0.00000000000000E+0      0.00000000000000E+0
0.00000000000000E+0      0.00000000000000E+0      1.00000000000000E+0
```

```
    0.00000000000000E+0      0.00000000000000E+0      0.00000000000000E+0
   BmNSMass                  3     345       1     3.00000000000000E+2
3.00000000000000E+2      0.00000000000000E+0      0.00000000000000E+0
0.00000000000000E+0      0.00000000000000E+0      1.00000000000000E+0
    0.00000000000000E+0      0.00000000000000E+0      0.00000000000000E+0
   BmNSMass                  3     346       1     3.00000000000000E+2
3.00000000000000E+2      0.00000000000000E+0      0.00000000000000E+0
0.00000000000000E+0      0.00000000000000E+0      1.00000000000000E+0
    0.00000000000000E+0      0.00000000000000E+0      0.00000000000000E+0
   BmNSMass                  3     347       1     3.00000000000000E+2
3.00000000000000E+2      0.00000000000000E+0      0.00000000000000E+0
0.00000000000000E+0      0.00000000000000E+0      1.00000000000000E+0
    0.00000000000000E+0      0.00000000000000E+0      0.00000000000000E+0
   BmNSMass                  3     348       1     3.00000000000000E+2
3.00000000000000E+2      0.00000000000000E+0      0.00000000000000E+0
0.00000000000000E+0      0.00000000000000E+0      1.00000000000000E+0
    0.00000000000000E+0      0.00000000000000E+0      0.00000000000000E+0
   BmNSMass                  3     349       1     3.00000000000000E+2
3.00000000000000E+2      0.00000000000000E+0      0.00000000000000E+0
0.00000000000000E+0      0.00000000000000E+0      1.00000000000000E+0
    0.00000000000000E+0      0.00000000000000E+0      0.00000000000000E+0
   BmNSMass                  3     350       1     3.00000000000000E+2
3.00000000000000E+2      0.00000000000000E+0      0.00000000000000E+0
0.00000000000000E+0      0.00000000000000E+0      1.00000000000000E+0
    0.00000000000000E+0      0.00000000000000E+0      0.00000000000000E+0
   BmNSMass                  3     351       1     3.00000000000000E+2
3.00000000000000E+2      0.00000000000000E+0      0.00000000000000E+0
0.00000000000000E+0      0.00000000000000E+0      1.00000000000000E+0
    0.00000000000000E+0      0.00000000000000E+0      0.00000000000000E+0
   BmNSMass                  3     352       1     3.00000000000000E+2
3.00000000000000E+2      0.00000000000000E+0      0.00000000000000E+0
0.00000000000000E+0      0.00000000000000E+0      1.00000000000000E+0
    0.00000000000000E+0      0.00000000000000E+0      0.00000000000000E+0
   BmNSMass                  3     353       1     3.00000000000000E+2
3.00000000000000E+2      0.00000000000000E+0      0.00000000000000E+0
0.00000000000000E+0      0.00000000000000E+0      1.00000000000000E+0
    0.00000000000000E+0      0.00000000000000E+0      0.00000000000000E+0
   BmNSMass                  3     354       1     3.00000000000000E+2
3.00000000000000E+2      0.00000000000000E+0      0.00000000000000E+0
0.00000000000000E+0      0.00000000000000E+0      1.00000000000000E+0
    0.00000000000000E+0      0.00000000000000E+0      0.00000000000000E+0
   BmNSMass                  3     355       1     3.00000000000000E+2
3.00000000000000E+2      0.00000000000000E+0      0.00000000000000E+0
0.00000000000000E+0      0.00000000000000E+0      1.00000000000000E+0
    0.00000000000000E+0      0.00000000000000E+0      0.00000000000000E+0
   BmNSMass                  3     356       1     3.00000000000000E+2
3.00000000000000E+2      0.00000000000000E+0      0.00000000000000E+0
0.00000000000000E+0      0.00000000000000E+0      1.00000000000000E+0
    0.00000000000000E+0      0.00000000000000E+0      0.00000000000000E+0
   BmNSMass                  3     357       1     3.00000000000000E+2
3.00000000000000E+2      0.00000000000000E+0      0.00000000000000E+0
0.00000000000000E+0      0.00000000000000E+0      1.00000000000000E+0
    0.00000000000000E+0      0.00000000000000E+0      0.00000000000000E+0
   BmNSMass                  3     358       1     3.00000000000000E+2
```

```
3.00000000000000E+2      0.00000000000000E+0      0.00000000000000E+0
0.00000000000000E+0      0.00000000000000E+0      1.00000000000000E+0
    0.00000000000000E+0      0.00000000000000E+0      0.00000000000000E+0
   BmNSMass                3     359       1     3.00000000000000E+2
3.00000000000000E+2      0.00000000000000E+0      0.00000000000000E+0
0.00000000000000E+0      0.00000000000000E+0      1.00000000000000E+0
    0.00000000000000E+0      0.00000000000000E+0      0.00000000000000E+0
   BmNSMass                3     360       1     3.00000000000000E+2
3.00000000000000E+2      0.00000000000000E+0      0.00000000000000E+0
0.00000000000000E+0      0.00000000000000E+0      1.00000000000000E+0
    0.00000000000000E+0      0.00000000000000E+0      0.00000000000000E+0
   BmNSMass                3     361       1     3.00000000000000E+2
3.00000000000000E+2      0.00000000000000E+0      0.00000000000000E+0
0.00000000000000E+0      0.00000000000000E+0      1.00000000000000E+0
    0.00000000000000E+0      0.00000000000000E+0      0.00000000000000E+0
   BmNSMass                3     362       1     3.00000000000000E+2
3.00000000000000E+2      0.00000000000000E+0      0.00000000000000E+0
0.00000000000000E+0      0.00000000000000E+0      1.00000000000000E+0
    0.00000000000000E+0      0.00000000000000E+0      0.00000000000000E+0
   BmNSMass                3     363       1     3.00000000000000E+2
3.00000000000000E+2      0.00000000000000E+0      0.00000000000000E+0
0.00000000000000E+0      0.00000000000000E+0      1.00000000000000E+0
    0.00000000000000E+0      0.00000000000000E+0      0.00000000000000E+0
   BmNSMass                3     364       1     3.00000000000000E+2
3.00000000000000E+2      0.00000000000000E+0      0.00000000000000E+0
0.00000000000000E+0      0.00000000000000E+0      1.00000000000000E+0
    0.00000000000000E+0      0.00000000000000E+0      0.00000000000000E+0
   BmNSMass                3     365       1     3.00000000000000E+2
3.00000000000000E+2      0.00000000000000E+0      0.00000000000000E+0
0.00000000000000E+0      0.00000000000000E+0      1.00000000000000E+0
    0.00000000000000E+0      0.00000000000000E+0      0.00000000000000E+0
   BmNSMass                3     366       1     3.00000000000000E+2
3.00000000000000E+2      0.00000000000000E+0      0.00000000000000E+0
0.00000000000000E+0      0.00000000000000E+0      1.00000000000000E+0
    0.00000000000000E+0      0.00000000000000E+0      0.00000000000000E+0
   BmNSMass                3     367       1     3.00000000000000E+2
3.00000000000000E+2      0.00000000000000E+0      0.00000000000000E+0
0.00000000000000E+0      0.00000000000000E+0      1.00000000000000E+0
    0.00000000000000E+0      0.00000000000000E+0      0.00000000000000E+0
   BmNSMass                3     368       1     3.00000000000000E+2
3.00000000000000E+2      0.00000000000000E+0      0.00000000000000E+0
0.00000000000000E+0      0.00000000000000E+0      1.00000000000000E+0
    0.00000000000000E+0      0.00000000000000E+0      0.00000000000000E+0
   BmNSMass                3     369       1     3.00000000000000E+2
3.00000000000000E+2      0.00000000000000E+0      0.00000000000000E+0
0.00000000000000E+0      0.00000000000000E+0      1.00000000000000E+0
    0.00000000000000E+0      0.00000000000000E+0      0.00000000000000E+0
   BmNSMass                3     370       1     3.00000000000000E+2
3.00000000000000E+2      0.00000000000000E+0      0.00000000000000E+0
0.00000000000000E+0      0.00000000000000E+0      1.00000000000000E+0
    0.00000000000000E+0      0.00000000000000E+0      0.00000000000000E+0
   BmNSMass                3     371       1     3.00000000000000E+2
3.00000000000000E+2      0.00000000000000E+0      0.00000000000000E+0
0.00000000000000E+0      0.00000000000000E+0      1.00000000000000E+0
```

```
    0.00000000000000E+0     0.00000000000000E+0     0.00000000000000E+0
   BmNSMass                  3     372       1     3.00000000000000E+2
3.00000000000000E+2     0.00000000000000E+0     0.00000000000000E+0
0.00000000000000E+0     0.00000000000000E+0     1.00000000000000E+0
    0.00000000000000E+0     0.00000000000000E+0     0.00000000000000E+0
   BmNSMass                  3     373       1     3.00000000000000E+2
3.00000000000000E+2     0.00000000000000E+0     0.00000000000000E+0
0.00000000000000E+0     0.00000000000000E+0     1.00000000000000E+0
    0.00000000000000E+0     0.00000000000000E+0     0.00000000000000E+0
   BmNSMass                  3     374       1     3.00000000000000E+2
3.00000000000000E+2     0.00000000000000E+0     0.00000000000000E+0
0.00000000000000E+0     0.00000000000000E+0     1.00000000000000E+0
    0.00000000000000E+0     0.00000000000000E+0     0.00000000000000E+0
   BmNSMass                  3     375       1     3.00000000000000E+2
3.00000000000000E+2     0.00000000000000E+0     0.00000000000000E+0
0.00000000000000E+0     0.00000000000000E+0     1.00000000000000E+0
    0.00000000000000E+0     0.00000000000000E+0     0.00000000000000E+0
   BmNSMass                  3     376       1     3.00000000000000E+2
3.00000000000000E+2     0.00000000000000E+0     0.00000000000000E+0
0.00000000000000E+0     0.00000000000000E+0     1.00000000000000E+0
    0.00000000000000E+0     0.00000000000000E+0     0.00000000000000E+0
   BmNSMass                  3     377       1     3.00000000000000E+2
3.00000000000000E+2     0.00000000000000E+0     0.00000000000000E+0
0.00000000000000E+0     0.00000000000000E+0     1.00000000000000E+0
    0.00000000000000E+0     0.00000000000000E+0     0.00000000000000E+0
   BmNSMass                  3     378       1     3.00000000000000E+2
3.00000000000000E+2     0.00000000000000E+0     0.00000000000000E+0
0.00000000000000E+0     0.00000000000000E+0     1.00000000000000E+0
    0.00000000000000E+0     0.00000000000000E+0     0.00000000000000E+0
   BmNSMass                  3     379       1     3.00000000000000E+2
3.00000000000000E+2     0.00000000000000E+0     0.00000000000000E+0
0.00000000000000E+0     0.00000000000000E+0     1.00000000000000E+0
    0.00000000000000E+0     0.00000000000000E+0     0.00000000000000E+0
   BmNSMass                  3     380       1     3.00000000000000E+2
3.00000000000000E+2     0.00000000000000E+0     0.00000000000000E+0
0.00000000000000E+0     0.00000000000000E+0     1.00000000000000E+0
    0.00000000000000E+0     0.00000000000000E+0     0.00000000000000E+0
   BmNSMass                  3     381       1     3.00000000000000E+2
3.00000000000000E+2     0.00000000000000E+0     0.00000000000000E+0
0.00000000000000E+0     0.00000000000000E+0     1.00000000000000E+0
    0.00000000000000E+0     0.00000000000000E+0     0.00000000000000E+0
   BmNSMass                  3     382       1     3.00000000000000E+2
3.00000000000000E+2     0.00000000000000E+0     0.00000000000000E+0
0.00000000000000E+0     0.00000000000000E+0     1.00000000000000E+0
    0.00000000000000E+0     0.00000000000000E+0     0.00000000000000E+0
   BmNSMass                  3     383       1     3.00000000000000E+2
3.00000000000000E+2     0.00000000000000E+0     0.00000000000000E+0
0.00000000000000E+0     0.00000000000000E+0     1.00000000000000E+0
    0.00000000000000E+0     0.00000000000000E+0     0.00000000000000E+0
   BmNSMass                  3     384       1     3.00000000000000E+2
3.00000000000000E+2     0.00000000000000E+0     0.00000000000000E+0
0.00000000000000E+0     0.00000000000000E+0     1.00000000000000E+0
    0.00000000000000E+0     0.00000000000000E+0     0.00000000000000E+0
   BmNSMass                  3     385       1     3.00000000000000E+2
```

```
3.00000000000000E+2      0.00000000000000E+0      0.00000000000000E+0
0.00000000000000E+0      0.00000000000000E+0      1.00000000000000E+0
    0.00000000000000E+0      0.00000000000000E+0      0.00000000000000E+0
   BmNSMass                 3     386        1     3.00000000000000E+2
3.00000000000000E+2      0.00000000000000E+0      0.00000000000000E+0
0.00000000000000E+0      0.00000000000000E+0      1.00000000000000E+0
    0.00000000000000E+0      0.00000000000000E+0      0.00000000000000E+0
   BmNSMass                 3     387        1     3.00000000000000E+2
3.00000000000000E+2      0.00000000000000E+0      0.00000000000000E+0
0.00000000000000E+0      0.00000000000000E+0      1.00000000000000E+0
    0.00000000000000E+0      0.00000000000000E+0      0.00000000000000E+0
   BmNSMass                 3     388        1     3.00000000000000E+2
3.00000000000000E+2      0.00000000000000E+0      0.00000000000000E+0
0.00000000000000E+0      0.00000000000000E+0      1.00000000000000E+0
    0.00000000000000E+0      0.00000000000000E+0      0.00000000000000E+0
   BmNSMass                 3     389        1     3.00000000000000E+2
3.00000000000000E+2      0.00000000000000E+0      0.00000000000000E+0
0.00000000000000E+0      0.00000000000000E+0      1.00000000000000E+0
    0.00000000000000E+0      0.00000000000000E+0      0.00000000000000E+0
   BmNSMass                 3     390        1     3.00000000000000E+2
3.00000000000000E+2      0.00000000000000E+0      0.00000000000000E+0
0.00000000000000E+0      0.00000000000000E+0      1.00000000000000E+0
    0.00000000000000E+0      0.00000000000000E+0      0.00000000000000E+0
   BmNSMass                 3     391        1     3.00000000000000E+2
3.00000000000000E+2      0.00000000000000E+0      0.00000000000000E+0
0.00000000000000E+0      0.00000000000000E+0      1.00000000000000E+0
    0.00000000000000E+0      0.00000000000000E+0      0.00000000000000E+0
   BmNSMass                 3     392        1     3.00000000000000E+2
3.00000000000000E+2      0.00000000000000E+0      0.00000000000000E+0
0.00000000000000E+0      0.00000000000000E+0      1.00000000000000E+0
    0.00000000000000E+0      0.00000000000000E+0      0.00000000000000E+0
   BmNSMass                 3     393        1     3.00000000000000E+2
3.00000000000000E+2      0.00000000000000E+0      0.00000000000000E+0
0.00000000000000E+0      0.00000000000000E+0      1.00000000000000E+0
    0.00000000000000E+0      0.00000000000000E+0      0.00000000000000E+0
   BmNSMass                 3     394        1     3.00000000000000E+2
3.00000000000000E+2      0.00000000000000E+0      0.00000000000000E+0
0.00000000000000E+0      0.00000000000000E+0      1.00000000000000E+0
    0.00000000000000E+0      0.00000000000000E+0      0.00000000000000E+0
   BmNSMass                 3     395        1     3.00000000000000E+2
3.00000000000000E+2      0.00000000000000E+0      0.00000000000000E+0
0.00000000000000E+0      0.00000000000000E+0      1.00000000000000E+0
    0.00000000000000E+0      0.00000000000000E+0      0.00000000000000E+0
   BmNSMass                 3     396        1     3.00000000000000E+2
3.00000000000000E+2      0.00000000000000E+0      0.00000000000000E+0
0.00000000000000E+0      0.00000000000000E+0      1.00000000000000E+0
    0.00000000000000E+0      0.00000000000000E+0      0.00000000000000E+0
   BmNSMass                 3     397        1     3.00000000000000E+2
3.00000000000000E+2      0.00000000000000E+0      0.00000000000000E+0
0.00000000000000E+0      0.00000000000000E+0      1.00000000000000E+0
    0.00000000000000E+0      0.00000000000000E+0      0.00000000000000E+0
   BmNSMass                 3     398        1     3.00000000000000E+2
3.00000000000000E+2      0.00000000000000E+0      0.00000000000000E+0
0.00000000000000E+0      0.00000000000000E+0      1.00000000000000E+0
```

```
    0.00000000000000E+0      0.00000000000000E+0      0.00000000000000E+0
   BmNSMass                 3      399        1      3.00000000000000E+2
3.00000000000000E+2      0.00000000000000E+0      0.00000000000000E+0
0.00000000000000E+0      0.00000000000000E+0      1.00000000000000E+0
    0.00000000000000E+0      0.00000000000000E+0      0.00000000000000E+0
   BmNSMass                 3      400        1      3.00000000000000E+2
3.00000000000000E+2      0.00000000000000E+0      0.00000000000000E+0
0.00000000000000E+0      0.00000000000000E+0      1.00000000000000E+0
    0.00000000000000E+0      0.00000000000000E+0      0.00000000000000E+0
   BmNSMass                 3      401        1      3.00000000000000E+2
3.00000000000000E+2      0.00000000000000E+0      0.00000000000000E+0
0.00000000000000E+0      0.00000000000000E+0      1.00000000000000E+0
    0.00000000000000E+0      0.00000000000000E+0      0.00000000000000E+0
   BmNSMass                 3      402        1      3.00000000000000E+2
3.00000000000000E+2      0.00000000000000E+0      0.00000000000000E+0
0.00000000000000E+0      0.00000000000000E+0      1.00000000000000E+0
    0.00000000000000E+0      0.00000000000000E+0      0.00000000000000E+0
   BmNSMass                 3      403        1      3.00000000000000E+2
3.00000000000000E+2      0.00000000000000E+0      0.00000000000000E+0
0.00000000000000E+0      0.00000000000000E+0      1.00000000000000E+0
    0.00000000000000E+0      0.00000000000000E+0      0.00000000000000E+0
   BmNSMass                 3      404        1      3.00000000000000E+2
3.00000000000000E+2      0.00000000000000E+0      0.00000000000000E+0
0.00000000000000E+0      0.00000000000000E+0      1.00000000000000E+0
    0.00000000000000E+0      0.00000000000000E+0      0.00000000000000E+0
   BmNSMass                 3      405        1      3.00000000000000E+2
3.00000000000000E+2      0.00000000000000E+0      0.00000000000000E+0
0.00000000000000E+0      0.00000000000000E+0      1.00000000000000E+0
    0.00000000000000E+0      0.00000000000000E+0      0.00000000000000E+0
   BmNSMass                 3      406        1      3.00000000000000E+2
3.00000000000000E+2      0.00000000000000E+0      0.00000000000000E+0
0.00000000000000E+0      0.00000000000000E+0      1.00000000000000E+0
    0.00000000000000E+0      0.00000000000000E+0      0.00000000000000E+0
   BmNSMass                 3      407        1      3.00000000000000E+2
3.00000000000000E+2      0.00000000000000E+0      0.00000000000000E+0
0.00000000000000E+0      0.00000000000000E+0      1.00000000000000E+0
    0.00000000000000E+0      0.00000000000000E+0      0.00000000000000E+0
   BmNSMass                 3      408        1      3.00000000000000E+2
3.00000000000000E+2      0.00000000000000E+0      0.00000000000000E+0
0.00000000000000E+0      0.00000000000000E+0      1.00000000000000E+0
    0.00000000000000E+0      0.00000000000000E+0      0.00000000000000E+0
   BmNSMass                 3      409        1      3.00000000000000E+2
3.00000000000000E+2      0.00000000000000E+0      0.00000000000000E+0
0.00000000000000E+0      0.00000000000000E+0      1.00000000000000E+0
    0.00000000000000E+0      0.00000000000000E+0      0.00000000000000E+0
   BmNSMass                 3      410        1      3.00000000000000E+2
3.00000000000000E+2      0.00000000000000E+0      0.00000000000000E+0
0.00000000000000E+0      0.00000000000000E+0      1.00000000000000E+0
    0.00000000000000E+0      0.00000000000000E+0      0.00000000000000E+0
   BmNSMass                 3      411        1      3.00000000000000E+2
3.00000000000000E+2      0.00000000000000E+0      0.00000000000000E+0
0.00000000000000E+0      0.00000000000000E+0      1.00000000000000E+0
    0.00000000000000E+0      0.00000000000000E+0      0.00000000000000E+0
   BmNSMass                 3      412        1      3.00000000000000E+2
```

```
3.00000000000000E+2      0.00000000000000E+0      0.00000000000000E+0
0.00000000000000E+0      0.00000000000000E+0      1.00000000000000E+0
    0.00000000000000E+0      0.00000000000000E+0      0.00000000000000E+0
   BmNSMass                 3     413       1     3.00000000000000E+2
3.00000000000000E+2      0.00000000000000E+0      0.00000000000000E+0
0.00000000000000E+0      0.00000000000000E+0      1.00000000000000E+0
    0.00000000000000E+0      0.00000000000000E+0      0.00000000000000E+0
   BmNSMass                 3     414       1     3.00000000000000E+2
3.00000000000000E+2      0.00000000000000E+0      0.00000000000000E+0
0.00000000000000E+0      0.00000000000000E+0      1.00000000000000E+0
    0.00000000000000E+0      0.00000000000000E+0      0.00000000000000E+0
   BmNSMass                 3     415       1     3.00000000000000E+2
3.00000000000000E+2      0.00000000000000E+0      0.00000000000000E+0
0.00000000000000E+0      0.00000000000000E+0      1.00000000000000E+0
    0.00000000000000E+0      0.00000000000000E+0      0.00000000000000E+0
   BmNSMass                 3     416       1     3.00000000000000E+2
3.00000000000000E+2      0.00000000000000E+0      0.00000000000000E+0
0.00000000000000E+0      0.00000000000000E+0      1.00000000000000E+0
    0.00000000000000E+0      0.00000000000000E+0      0.00000000000000E+0
   BmNSMass                 3     417       1     3.00000000000000E+2
3.00000000000000E+2      0.00000000000000E+0      0.00000000000000E+0
0.00000000000000E+0      0.00000000000000E+0      1.00000000000000E+0
    0.00000000000000E+0      0.00000000000000E+0      0.00000000000000E+0
   BmNSMass                 3     418       1     3.00000000000000E+2
3.00000000000000E+2      0.00000000000000E+0      0.00000000000000E+0
0.00000000000000E+0      0.00000000000000E+0      1.00000000000000E+0
    0.00000000000000E+0      0.00000000000000E+0      0.00000000000000E+0
   BmNSMass                 3     419       1     3.00000000000000E+2
3.00000000000000E+2      0.00000000000000E+0      0.00000000000000E+0
0.00000000000000E+0      0.00000000000000E+0      1.00000000000000E+0
    0.00000000000000E+0      0.00000000000000E+0      0.00000000000000E+0
   BmNSMass                 3     420       1     3.00000000000000E+2
3.00000000000000E+2      0.00000000000000E+0      0.00000000000000E+0
0.00000000000000E+0      0.00000000000000E+0      1.00000000000000E+0
    0.00000000000000E+0      0.00000000000000E+0      0.00000000000000E+0
   BmNSMass                 3     421       1     3.00000000000000E+2
3.00000000000000E+2      0.00000000000000E+0      0.00000000000000E+0
0.00000000000000E+0      0.00000000000000E+0      1.00000000000000E+0
    0.00000000000000E+0      0.00000000000000E+0      0.00000000000000E+0
   BmNSMass                 3     422       1     3.00000000000000E+2
3.00000000000000E+2      0.00000000000000E+0      0.00000000000000E+0
0.00000000000000E+0      0.00000000000000E+0      1.00000000000000E+0
    0.00000000000000E+0      0.00000000000000E+0      0.00000000000000E+0
   BmNSMass                 3     423       1     3.00000000000000E+2
3.00000000000000E+2      0.00000000000000E+0      0.00000000000000E+0
0.00000000000000E+0      0.00000000000000E+0      1.00000000000000E+0
    0.00000000000000E+0      0.00000000000000E+0      0.00000000000000E+0
   BmNSMass                 3     424       1     3.00000000000000E+2
3.00000000000000E+2      0.00000000000000E+0      0.00000000000000E+0
0.00000000000000E+0      0.00000000000000E+0      1.00000000000000E+0
    0.00000000000000E+0      0.00000000000000E+0      0.00000000000000E+0
   BmNSMass                 3     425       1     3.00000000000000E+2
3.00000000000000E+2      0.00000000000000E+0      0.00000000000000E+0
0.00000000000000E+0      0.00000000000000E+0      1.00000000000000E+0
```

```
     0.00000000000000E+0      0.00000000000000E+0      0.00000000000000E+0
   BmNSMass                 3     426       1     3.00000000000000E+2
3.00000000000000E+2      0.00000000000000E+0      0.00000000000000E+0
0.00000000000000E+0      0.00000000000000E+0      1.00000000000000E+0
     0.00000000000000E+0      0.00000000000000E+0      0.00000000000000E+0
   BmNSMass                 3     427       1     3.00000000000000E+2
3.00000000000000E+2      0.00000000000000E+0      0.00000000000000E+0
0.00000000000000E+0      0.00000000000000E+0      1.00000000000000E+0
     0.00000000000000E+0      0.00000000000000E+0      0.00000000000000E+0
   BmNSMass                 3     428       1     3.00000000000000E+2
3.00000000000000E+2      0.00000000000000E+0      0.00000000000000E+0
0.00000000000000E+0      0.00000000000000E+0      1.00000000000000E+0
     0.00000000000000E+0      0.00000000000000E+0      0.00000000000000E+0
   BmNSMass                 3     429       1     3.00000000000000E+2
3.00000000000000E+2      0.00000000000000E+0      0.00000000000000E+0
0.00000000000000E+0      0.00000000000000E+0      1.00000000000000E+0
     0.00000000000000E+0      0.00000000000000E+0      0.00000000000000E+0
   BmNSMass                 3     430       1     3.00000000000000E+2
3.00000000000000E+2      0.00000000000000E+0      0.00000000000000E+0
0.00000000000000E+0      0.00000000000000E+0      1.00000000000000E+0
     0.00000000000000E+0      0.00000000000000E+0      0.00000000000000E+0
   BmNSMass                 3     431       1     3.00000000000000E+2
3.00000000000000E+2      0.00000000000000E+0      0.00000000000000E+0
0.00000000000000E+0      0.00000000000000E+0      1.00000000000000E+0
     0.00000000000000E+0      0.00000000000000E+0      0.00000000000000E+0
   BmNSMass                 3     432       1     3.00000000000000E+2
3.00000000000000E+2      0.00000000000000E+0      0.00000000000000E+0
0.00000000000000E+0      0.00000000000000E+0      1.00000000000000E+0
     0.00000000000000E+0      0.00000000000000E+0      0.00000000000000E+0
   BmNSMass                 3     433       1     3.00000000000000E+2
3.00000000000000E+2      0.00000000000000E+0      0.00000000000000E+0
0.00000000000000E+0      0.00000000000000E+0      1.00000000000000E+0
     0.00000000000000E+0      0.00000000000000E+0      0.00000000000000E+0
   BmNSMass                 3     503       1     7.00000000000000E+2
7.00000000000000E+2      0.00000000000000E+0      0.00000000000000E+0
0.00000000000000E+0      0.00000000000000E+0      1.00000000000000E+0
     0.00000000000000E+0      0.00000000000000E+0      0.00000000000000E+0
   BmNSMass                 3     504       1     7.00000000000000E+2
7.00000000000000E+2      0.00000000000000E+0      0.00000000000000E+0
0.00000000000000E+0      0.00000000000000E+0      1.00000000000000E+0
     0.00000000000000E+0      0.00000000000000E+0      0.00000000000000E+0
   BmNSMass                 3     505       1     7.00000000000000E+2
7.00000000000000E+2      0.00000000000000E+0      0.00000000000000E+0
0.00000000000000E+0      0.00000000000000E+0      1.00000000000000E+0
     0.00000000000000E+0      0.00000000000000E+0      0.00000000000000E+0
   BmNSMass                 3     506       1     7.00000000000000E+2
7.00000000000000E+2      0.00000000000000E+0      0.00000000000000E+0
0.00000000000000E+0      0.00000000000000E+0      1.00000000000000E+0
     0.00000000000000E+0      0.00000000000000E+0      0.00000000000000E+0
   BmNSMass                 3     507       1     7.00000000000000E+2
7.00000000000000E+2      0.00000000000000E+0      0.00000000000000E+0
0.00000000000000E+0      0.00000000000000E+0      1.00000000000000E+0
     0.00000000000000E+0      0.00000000000000E+0      0.00000000000000E+0
   BmNSMass                 3     508       1     7.00000000000000E+2
```

```
7.00000000000000E+2      0.00000000000000E+0      0.00000000000000E+0
0.00000000000000E+0      0.00000000000000E+0      1.00000000000000E+0
    0.00000000000000E+0      0.00000000000000E+0      0.00000000000000E+0
   BmNSMass                 3     509       1     7.00000000000000E+2
7.00000000000000E+2      0.00000000000000E+0      0.00000000000000E+0
0.00000000000000E+0      0.00000000000000E+0      1.00000000000000E+0
    0.00000000000000E+0      0.00000000000000E+0      0.00000000000000E+0
   BmNSMass                 3     510       1     7.00000000000000E+2
7.00000000000000E+2      0.00000000000000E+0      0.00000000000000E+0
0.00000000000000E+0      0.00000000000000E+0      1.00000000000000E+0
    0.00000000000000E+0      0.00000000000000E+0      0.00000000000000E+0
   BmNSMass                 3     511       1     7.00000000000000E+2
7.00000000000000E+2      0.00000000000000E+0      0.00000000000000E+0
0.00000000000000E+0      0.00000000000000E+0      1.00000000000000E+0
    0.00000000000000E+0      0.00000000000000E+0      0.00000000000000E+0
   BmNSMass                 3     512       1     7.00000000000000E+2
7.00000000000000E+2      0.00000000000000E+0      0.00000000000000E+0
0.00000000000000E+0      0.00000000000000E+0      1.00000000000000E+0
    0.00000000000000E+0      0.00000000000000E+0      0.00000000000000E+0
   BmNSMass                 3     513       1     7.00000000000000E+2
7.00000000000000E+2      0.00000000000000E+0      0.00000000000000E+0
0.00000000000000E+0      0.00000000000000E+0      1.00000000000000E+0
    0.00000000000000E+0      0.00000000000000E+0      0.00000000000000E+0
   BmNSMass                 3     514       1     7.00000000000000E+2
7.00000000000000E+2      0.00000000000000E+0      0.00000000000000E+0
0.00000000000000E+0      0.00000000000000E+0      1.00000000000000E+0
    0.00000000000000E+0      0.00000000000000E+0      0.00000000000000E+0
   BmNSMass                 3     515       1     7.00000000000000E+2
7.00000000000000E+2      0.00000000000000E+0      0.00000000000000E+0
0.00000000000000E+0      0.00000000000000E+0      1.00000000000000E+0
    0.00000000000000E+0      0.00000000000000E+0      0.00000000000000E+0
   BmNSMass                 3     516       1     7.00000000000000E+2
7.00000000000000E+2      0.00000000000000E+0      0.00000000000000E+0
0.00000000000000E+0      0.00000000000000E+0      1.00000000000000E+0
    0.00000000000000E+0      0.00000000000000E+0      0.00000000000000E+0
   BmNSMass                 3     517       1     7.00000000000000E+2
7.00000000000000E+2      0.00000000000000E+0      0.00000000000000E+0
0.00000000000000E+0      0.00000000000000E+0      1.00000000000000E+0
    0.00000000000000E+0      0.00000000000000E+0      0.00000000000000E+0
   BmNSMass                 3     518       1     7.00000000000000E+2
7.00000000000000E+2      0.00000000000000E+0      0.00000000000000E+0
0.00000000000000E+0      0.00000000000000E+0      1.00000000000000E+0
    0.00000000000000E+0      0.00000000000000E+0      0.00000000000000E+0
   BmNSMass                 3     519       1     7.00000000000000E+2
7.00000000000000E+2      0.00000000000000E+0      0.00000000000000E+0
0.00000000000000E+0      0.00000000000000E+0      1.00000000000000E+0
    0.00000000000000E+0      0.00000000000000E+0      0.00000000000000E+0
   BmNSMass                 3     520       1     7.00000000000000E+2
7.00000000000000E+2      0.00000000000000E+0      0.00000000000000E+0
0.00000000000000E+0      0.00000000000000E+0      1.00000000000000E+0
    0.00000000000000E+0      0.00000000000000E+0      0.00000000000000E+0
   BmNSMass                 3     521       1     7.00000000000000E+2
7.00000000000000E+2      0.00000000000000E+0      0.00000000000000E+0
0.00000000000000E+0      0.00000000000000E+0      1.00000000000000E+0
```

```
    0.00000000000000E+0      0.00000000000000E+0      0.00000000000000E+0
   BmNSMass                 3     522       1     7.00000000000000E+2
7.00000000000000E+2      0.00000000000000E+0      0.00000000000000E+0
0.00000000000000E+0      0.00000000000000E+0      1.00000000000000E+0
    0.00000000000000E+0      0.00000000000000E+0      0.00000000000000E+0
   BmNSMass                 3     523       1     7.00000000000000E+2
7.00000000000000E+2      0.00000000000000E+0      0.00000000000000E+0
0.00000000000000E+0      0.00000000000000E+0      1.00000000000000E+0
    0.00000000000000E+0      0.00000000000000E+0      0.00000000000000E+0
   BmNSMass                 3     524       1     7.00000000000000E+2
7.00000000000000E+2      0.00000000000000E+0      0.00000000000000E+0
0.00000000000000E+0      0.00000000000000E+0      1.00000000000000E+0
    0.00000000000000E+0      0.00000000000000E+0      0.00000000000000E+0
   BmNSMass                 3     525       1     7.00000000000000E+2
7.00000000000000E+2      0.00000000000000E+0      0.00000000000000E+0
0.00000000000000E+0      0.00000000000000E+0      1.00000000000000E+0
    0.00000000000000E+0      0.00000000000000E+0      0.00000000000000E+0
   BmNSMass                 3     526       1     7.00000000000000E+2
7.00000000000000E+2      0.00000000000000E+0      0.00000000000000E+0
0.00000000000000E+0      0.00000000000000E+0      1.00000000000000E+0
    0.00000000000000E+0      0.00000000000000E+0      0.00000000000000E+0
   BmNSMass                 3     527       1     7.00000000000000E+2
7.00000000000000E+2      0.00000000000000E+0      0.00000000000000E+0
0.00000000000000E+0      0.00000000000000E+0      1.00000000000000E+0
    0.00000000000000E+0      0.00000000000000E+0      0.00000000000000E+0
   BmNSMass                 3     528       1     7.00000000000000E+2
7.00000000000000E+2      0.00000000000000E+0      0.00000000000000E+0
0.00000000000000E+0      0.00000000000000E+0      1.00000000000000E+0
    0.00000000000000E+0      0.00000000000000E+0      0.00000000000000E+0
   BmNSMass                 3     529       1     7.00000000000000E+2
7.00000000000000E+2      0.00000000000000E+0      0.00000000000000E+0
0.00000000000000E+0      0.00000000000000E+0      1.00000000000000E+0
    0.00000000000000E+0      0.00000000000000E+0      0.00000000000000E+0
   BmNSMass                 3     530       1     7.00000000000000E+2
7.00000000000000E+2      0.00000000000000E+0      0.00000000000000E+0
0.00000000000000E+0      0.00000000000000E+0      1.00000000000000E+0
    0.00000000000000E+0      0.00000000000000E+0      0.00000000000000E+0
   BmNSMass                 3     531       1     7.00000000000000E+2
7.00000000000000E+2      0.00000000000000E+0      0.00000000000000E+0
0.00000000000000E+0      0.00000000000000E+0      1.00000000000000E+0
    0.00000000000000E+0      0.00000000000000E+0      0.00000000000000E+0
   BmNSMass                 3     532       1     7.00000000000000E+2
7.00000000000000E+2      0.00000000000000E+0      0.00000000000000E+0
0.00000000000000E+0      0.00000000000000E+0      1.00000000000000E+0
    0.00000000000000E+0      0.00000000000000E+0      0.00000000000000E+0
   BmNSMass                 3     533       1     7.00000000000000E+2
7.00000000000000E+2      0.00000000000000E+0      0.00000000000000E+0
0.00000000000000E+0      0.00000000000000E+0      1.00000000000000E+0
    0.00000000000000E+0      0.00000000000000E+0      0.00000000000000E+0
   BmNSMass                 3     534       1     7.00000000000000E+2
7.00000000000000E+2      0.00000000000000E+0      0.00000000000000E+0
0.00000000000000E+0      0.00000000000000E+0      1.00000000000000E+0
    0.00000000000000E+0      0.00000000000000E+0      0.00000000000000E+0
   BmNSMass                 3     535       1     7.00000000000000E+2
```

```
7.00000000000000E+2      0.00000000000000E+0      0.00000000000000E+0
0.00000000000000E+0      0.00000000000000E+0      1.00000000000000E+0
    0.00000000000000E+0      0.00000000000000E+0      0.00000000000000E+0
   BmNSMass                 3     536       1     7.00000000000000E+2
7.00000000000000E+2      0.00000000000000E+0      0.00000000000000E+0
0.00000000000000E+0      0.00000000000000E+0      1.00000000000000E+0
    0.00000000000000E+0      0.00000000000000E+0      0.00000000000000E+0
   BmNSMass                 3     537       1     7.00000000000000E+2
7.00000000000000E+2      0.00000000000000E+0      0.00000000000000E+0
0.00000000000000E+0      0.00000000000000E+0      1.00000000000000E+0
    0.00000000000000E+0      0.00000000000000E+0      0.00000000000000E+0
   BmNSMass                 3     538       1     7.00000000000000E+2
7.00000000000000E+2      0.00000000000000E+0      0.00000000000000E+0
0.00000000000000E+0      0.00000000000000E+0      1.00000000000000E+0
    0.00000000000000E+0      0.00000000000000E+0      0.00000000000000E+0
   BmNSMass                 3     539       1     7.00000000000000E+2
7.00000000000000E+2      0.00000000000000E+0      0.00000000000000E+0
0.00000000000000E+0      0.00000000000000E+0      1.00000000000000E+0
    0.00000000000000E+0      0.00000000000000E+0      0.00000000000000E+0
   BmNSMass                 3     540       1     7.00000000000000E+2
7.00000000000000E+2      0.00000000000000E+0      0.00000000000000E+0
0.00000000000000E+0      0.00000000000000E+0      1.00000000000000E+0
    0.00000000000000E+0      0.00000000000000E+0      0.00000000000000E+0
   BmNSMass                 3     541       1     7.00000000000000E+2
7.00000000000000E+2      0.00000000000000E+0      0.00000000000000E+0
0.00000000000000E+0      0.00000000000000E+0      1.00000000000000E+0
    0.00000000000000E+0      0.00000000000000E+0      0.00000000000000E+0
   BmNSMass                 3     542       1     7.00000000000000E+2
7.00000000000000E+2      0.00000000000000E+0      0.00000000000000E+0
0.00000000000000E+0      0.00000000000000E+0      1.00000000000000E+0
    0.00000000000000E+0      0.00000000000000E+0      0.00000000000000E+0
   BmNSMass                 3     543       1     7.00000000000000E+2
7.00000000000000E+2      0.00000000000000E+0      0.00000000000000E+0
0.00000000000000E+0      0.00000000000000E+0      1.00000000000000E+0
    0.00000000000000E+0      0.00000000000000E+0      0.00000000000000E+0
   BmNSMass                 3     544       1     7.00000000000000E+2
7.00000000000000E+2      0.00000000000000E+0      0.00000000000000E+0
0.00000000000000E+0      0.00000000000000E+0      1.00000000000000E+0
    0.00000000000000E+0      0.00000000000000E+0      0.00000000000000E+0
   BmNSMass                 3     545       1     7.00000000000000E+2
7.00000000000000E+2      0.00000000000000E+0      0.00000000000000E+0
0.00000000000000E+0      0.00000000000000E+0      1.00000000000000E+0
    0.00000000000000E+0      0.00000000000000E+0      0.00000000000000E+0
   BmNSMass                 3     546       1     7.00000000000000E+2
7.00000000000000E+2      0.00000000000000E+0      0.00000000000000E+0
0.00000000000000E+0      0.00000000000000E+0      1.00000000000000E+0
    0.00000000000000E+0      0.00000000000000E+0      0.00000000000000E+0
   BmNSMass                 3     547       1     7.00000000000000E+2
7.00000000000000E+2      0.00000000000000E+0      0.00000000000000E+0
0.00000000000000E+0      0.00000000000000E+0      1.00000000000000E+0
    0.00000000000000E+0      0.00000000000000E+0      0.00000000000000E+0
   BmNSMass                 3     548       1     7.00000000000000E+2
7.00000000000000E+2      0.00000000000000E+0      0.00000000000000E+0
0.00000000000000E+0      0.00000000000000E+0      1.00000000000000E+0
```

```
    0.00000000000000E+0      0.00000000000000E+0      0.00000000000000E+0
   BmNSMass                 3     549       1     7.00000000000000E+2
7.00000000000000E+2      0.00000000000000E+0      0.00000000000000E+0
0.00000000000000E+0      0.00000000000000E+0      1.00000000000000E+0
    0.00000000000000E+0      0.00000000000000E+0      0.00000000000000E+0
   BmNSMass                 3     550       1     7.00000000000000E+2
7.00000000000000E+2      0.00000000000000E+0      0.00000000000000E+0
0.00000000000000E+0      0.00000000000000E+0      1.00000000000000E+0
    0.00000000000000E+0      0.00000000000000E+0      0.00000000000000E+0
   BmNSMass                 3     551       1     7.00000000000000E+2
7.00000000000000E+2      0.00000000000000E+0      0.00000000000000E+0
0.00000000000000E+0      0.00000000000000E+0      1.00000000000000E+0
    0.00000000000000E+0      0.00000000000000E+0      0.00000000000000E+0
   BmNSMass                 3     552       1     7.00000000000000E+2
7.00000000000000E+2      0.00000000000000E+0      0.00000000000000E+0
0.00000000000000E+0      0.00000000000000E+0      1.00000000000000E+0
    0.00000000000000E+0      0.00000000000000E+0      0.00000000000000E+0
   BmNSMass                 3     553       1     7.00000000000000E+2
7.00000000000000E+2      0.00000000000000E+0      0.00000000000000E+0
0.00000000000000E+0      0.00000000000000E+0      1.00000000000000E+0
    0.00000000000000E+0      0.00000000000000E+0      0.00000000000000E+0
   BmNSMass                 3     554       1     7.00000000000000E+2
7.00000000000000E+2      0.00000000000000E+0      0.00000000000000E+0
0.00000000000000E+0      0.00000000000000E+0      1.00000000000000E+0
    0.00000000000000E+0      0.00000000000000E+0      0.00000000000000E+0
   BmNSMass                 3     555       1     7.00000000000000E+2
7.00000000000000E+2      0.00000000000000E+0      0.00000000000000E+0
0.00000000000000E+0      0.00000000000000E+0      1.00000000000000E+0
    0.00000000000000E+0      0.00000000000000E+0      0.00000000000000E+0
   BmNSMass                 3     556       1     7.00000000000000E+2
7.00000000000000E+2      0.00000000000000E+0      0.00000000000000E+0
0.00000000000000E+0      0.00000000000000E+0      1.00000000000000E+0
    0.00000000000000E+0      0.00000000000000E+0      0.00000000000000E+0
   BmNSMass                 3     557       1     7.00000000000000E+2
7.00000000000000E+2      0.00000000000000E+0      0.00000000000000E+0
0.00000000000000E+0      0.00000000000000E+0      1.00000000000000E+0
    0.00000000000000E+0      0.00000000000000E+0      0.00000000000000E+0
   BmNSMass                 3     558       1     7.00000000000000E+2
7.00000000000000E+2      0.00000000000000E+0      0.00000000000000E+0
0.00000000000000E+0      0.00000000000000E+0      1.00000000000000E+0
    0.00000000000000E+0      0.00000000000000E+0      0.00000000000000E+0
   BmNSMass                 3     649       1     1.50000000000000E+2
1.50000000000000E+2      0.00000000000000E+0      0.00000000000000E+0
0.00000000000000E+0      0.00000000000000E+0      1.00000000000000E+0
    0.00000000000000E+0      0.00000000000000E+0      0.00000000000000E+0
   BmNSMass                 3     650       1     1.50000000000000E+2
1.50000000000000E+2      0.00000000000000E+0      0.00000000000000E+0
0.00000000000000E+0      0.00000000000000E+0      1.00000000000000E+0
    0.00000000000000E+0      0.00000000000000E+0      0.00000000000000E+0
   BmNSMass                 3     651       1     1.50000000000000E+2
1.50000000000000E+2      0.00000000000000E+0      0.00000000000000E+0
0.00000000000000E+0      0.00000000000000E+0      1.00000000000000E+0
    0.00000000000000E+0      0.00000000000000E+0      0.00000000000000E+0
   BmNSMass                 3     652       1     1.50000000000000E+2
```

```
1.50000000000000E+2      0.00000000000000E+0      0.00000000000000E+0
0.00000000000000E+0      0.00000000000000E+0      1.00000000000000E+0
    0.00000000000000E+0      0.00000000000000E+0      0.00000000000000E+0
   BmNSMass                 3     653       1     3.00000000000000E+2
3.00000000000000E+2      0.00000000000000E+0      0.00000000000000E+0
0.00000000000000E+0      0.00000000000000E+0      1.00000000000000E+0
    0.00000000000000E+0      0.00000000000000E+0      0.00000000000000E+0
   BmNSMass                 3     654       1     3.00000000000000E+2
3.00000000000000E+2      0.00000000000000E+0      0.00000000000000E+0
0.00000000000000E+0      0.00000000000000E+0      1.00000000000000E+0
    0.00000000000000E+0      0.00000000000000E+0      0.00000000000000E+0
   BmNSMass                 3     655       1     3.00000000000000E+2
3.00000000000000E+2      0.00000000000000E+0      0.00000000000000E+0
0.00000000000000E+0      0.00000000000000E+0      1.00000000000000E+0
    0.00000000000000E+0      0.00000000000000E+0      0.00000000000000E+0
   BmNSMass                 3     656       1     3.00000000000000E+2
3.00000000000000E+2      0.00000000000000E+0      0.00000000000000E+0
0.00000000000000E+0      0.00000000000000E+0      1.00000000000000E+0
    0.00000000000000E+0      0.00000000000000E+0      0.00000000000000E+0
   BmNSMass                 3     657       1     3.00000000000000E+2
3.00000000000000E+2      0.00000000000000E+0      0.00000000000000E+0
0.00000000000000E+0      0.00000000000000E+0      1.00000000000000E+0
    0.00000000000000E+0      0.00000000000000E+0      0.00000000000000E+0
   BmNSMass                 3     658       1     3.00000000000000E+2
3.00000000000000E+2      0.00000000000000E+0      0.00000000000000E+0
0.00000000000000E+0      0.00000000000000E+0      1.00000000000000E+0
    0.00000000000000E+0      0.00000000000000E+0      0.00000000000000E+0
   BmNSMass                 3     659       1     3.00000000000000E+2
3.00000000000000E+2      0.00000000000000E+0      0.00000000000000E+0
0.00000000000000E+0      0.00000000000000E+0      1.00000000000000E+0
    0.00000000000000E+0      0.00000000000000E+0      0.00000000000000E+0
   BmNSMass                 3     660       1     3.00000000000000E+2
3.00000000000000E+2      0.00000000000000E+0      0.00000000000000E+0
0.00000000000000E+0      0.00000000000000E+0      1.00000000000000E+0
    0.00000000000000E+0      0.00000000000000E+0      0.00000000000000E+0
   BmNSMass                 3     661       1     3.00000000000000E+2
3.00000000000000E+2      0.00000000000000E+0      0.00000000000000E+0
0.00000000000000E+0      0.00000000000000E+0      1.00000000000000E+0
    0.00000000000000E+0      0.00000000000000E+0      0.00000000000000E+0
   BmNSMass                 3     662       1     3.00000000000000E+2
3.00000000000000E+2      0.00000000000000E+0      0.00000000000000E+0
0.00000000000000E+0      0.00000000000000E+0      1.00000000000000E+0
    0.00000000000000E+0      0.00000000000000E+0      0.00000000000000E+0
   BmNSMass                 3     663       1     3.00000000000000E+2
3.00000000000000E+2      0.00000000000000E+0      0.00000000000000E+0
0.00000000000000E+0      0.00000000000000E+0      1.00000000000000E+0
    0.00000000000000E+0      0.00000000000000E+0      0.00000000000000E+0
   BmNSMass                 3     664       1     3.00000000000000E+2
3.00000000000000E+2      0.00000000000000E+0      0.00000000000000E+0
0.00000000000000E+0      0.00000000000000E+0      1.00000000000000E+0
    0.00000000000000E+0      0.00000000000000E+0      0.00000000000000E+0
   BmNSMass                 3     665       1     3.00000000000000E+2
3.00000000000000E+2      0.00000000000000E+0      0.00000000000000E+0
0.00000000000000E+0      0.00000000000000E+0      1.00000000000000E+0
```

```
    0.00000000000000E+0      0.00000000000000E+0      0.00000000000000E+0
   BmNSMass                3      666       1     3.00000000000000E+2
3.00000000000000E+2      0.00000000000000E+0      0.00000000000000E+0
0.00000000000000E+0      0.00000000000000E+0      1.00000000000000E+0
    0.00000000000000E+0      0.00000000000000E+0      0.00000000000000E+0
   BmNSMass                3      667       1     3.00000000000000E+2
3.00000000000000E+2      0.00000000000000E+0      0.00000000000000E+0
0.00000000000000E+0      0.00000000000000E+0      1.00000000000000E+0
    0.00000000000000E+0      0.00000000000000E+0      0.00000000000000E+0
   BmNSMass                3      668       1     3.00000000000000E+2
3.00000000000000E+2      0.00000000000000E+0      0.00000000000000E+0
0.00000000000000E+0      0.00000000000000E+0      1.00000000000000E+0
    0.00000000000000E+0      0.00000000000000E+0      0.00000000000000E+0

/ ______________________________________________________________________________
/ BEAM NON-STRUCTURAL MASSES
/ G02b - Carico Pannelli Fonoassorbenti DX
   BmNSMass                4       13       1     1.50000000000000E+2
1.50000000000000E+2      0.00000000000000E+0      0.00000000000000E+0
0.00000000000000E+0      0.00000000000000E+0      1.00000000000000E+0
    0.00000000000000E+0      0.00000000000000E+0      0.00000000000000E+0
   BmNSMass                4       14       1     3.00000000000000E+2
3.00000000000000E+2      0.00000000000000E+0      0.00000000000000E+0
0.00000000000000E+0      0.00000000000000E+0      1.00000000000000E+0
    0.00000000000000E+0      0.00000000000000E+0      0.00000000000000E+0
   BmNSMass                4       15       1     3.00000000000000E+2
3.00000000000000E+2      0.00000000000000E+0      0.00000000000000E+0
0.00000000000000E+0      0.00000000000000E+0      1.00000000000000E+0
    0.00000000000000E+0      0.00000000000000E+0      0.00000000000000E+0
   BmNSMass                4       16       1     3.00000000000000E+2
3.00000000000000E+2      0.00000000000000E+0      0.00000000000000E+0
0.00000000000000E+0      0.00000000000000E+0      1.00000000000000E+0
    0.00000000000000E+0      0.00000000000000E+0      0.00000000000000E+0
   BmNSMass                4       17       1     3.00000000000000E+2
3.00000000000000E+2      0.00000000000000E+0      0.00000000000000E+0
0.00000000000000E+0      0.00000000000000E+0      1.00000000000000E+0
    0.00000000000000E+0      0.00000000000000E+0      0.00000000000000E+0
   BmNSMass                4       18       1     3.00000000000000E+2
3.00000000000000E+2      0.00000000000000E+0      0.00000000000000E+0
0.00000000000000E+0      0.00000000000000E+0      1.00000000000000E+0
    0.00000000000000E+0      0.00000000000000E+0      0.00000000000000E+0
   BmNSMass                4       19       1     3.00000000000000E+2
3.00000000000000E+2      0.00000000000000E+0      0.00000000000000E+0
0.00000000000000E+0      0.00000000000000E+0      1.00000000000000E+0
    0.00000000000000E+0      0.00000000000000E+0      0.00000000000000E+0
   BmNSMass                4       20       1     3.00000000000000E+2
3.00000000000000E+2      0.00000000000000E+0      0.00000000000000E+0
0.00000000000000E+0      0.00000000000000E+0      1.00000000000000E+0
    0.00000000000000E+0      0.00000000000000E+0      0.00000000000000E+0
   BmNSMass                4       21       1     3.00000000000000E+2
3.00000000000000E+2      0.00000000000000E+0      0.00000000000000E+0
0.00000000000000E+0      0.00000000000000E+0      1.00000000000000E+0
    0.00000000000000E+0      0.00000000000000E+0      0.00000000000000E+0
   BmNSMass                4       22       1     1.50000000000000E+2
```

```
1.50000000000000E+2      0.00000000000000E+0      0.00000000000000E+0
0.00000000000000E+0      0.00000000000000E+0      1.00000000000000E+0
    0.00000000000000E+0      0.00000000000000E+0      0.00000000000000E+0
   BmNSMass                 4     164       1     1.50000000000000E+2
1.50000000000000E+2      0.00000000000000E+0      0.00000000000000E+0
0.00000000000000E+0      0.00000000000000E+0      1.00000000000000E+0
    0.00000000000000E+0      0.00000000000000E+0      0.00000000000000E+0
   BmNSMass                 4     165       1     1.50000000000000E+2
1.50000000000000E+2      0.00000000000000E+0      0.00000000000000E+0
0.00000000000000E+0      0.00000000000000E+0      1.00000000000000E+0
    0.00000000000000E+0      0.00000000000000E+0      0.00000000000000E+0
   BmNSMass                 4     166       1     1.50000000000000E+2
1.50000000000000E+2      0.00000000000000E+0      0.00000000000000E+0
0.00000000000000E+0      0.00000000000000E+0      1.00000000000000E+0
    0.00000000000000E+0      0.00000000000000E+0      0.00000000000000E+0
   BmNSMass                 4     167       1     1.50000000000000E+2
1.50000000000000E+2      0.00000000000000E+0      0.00000000000000E+0
0.00000000000000E+0      0.00000000000000E+0      1.00000000000000E+0
    0.00000000000000E+0      0.00000000000000E+0      0.00000000000000E+0
   BmNSMass                 4     168       1     1.50000000000000E+2
1.50000000000000E+2      0.00000000000000E+0      0.00000000000000E+0
0.00000000000000E+0      0.00000000000000E+0      1.00000000000000E+0
    0.00000000000000E+0      0.00000000000000E+0      0.00000000000000E+0
   BmNSMass                 4     169       1     1.50000000000000E+2
1.50000000000000E+2      0.00000000000000E+0      0.00000000000000E+0
0.00000000000000E+0      0.00000000000000E+0      1.00000000000000E+0
    0.00000000000000E+0      0.00000000000000E+0      0.00000000000000E+0
   BmNSMass                 4     170       1     1.50000000000000E+2
1.50000000000000E+2      0.00000000000000E+0      0.00000000000000E+0
0.00000000000000E+0      0.00000000000000E+0      1.00000000000000E+0
    0.00000000000000E+0      0.00000000000000E+0      0.00000000000000E+0
   BmNSMass                 4     171       1     1.50000000000000E+2
1.50000000000000E+2      0.00000000000000E+0      0.00000000000000E+0
0.00000000000000E+0      0.00000000000000E+0      1.00000000000000E+0
    0.00000000000000E+0      0.00000000000000E+0      0.00000000000000E+0
   BmNSMass                 4     172       1     1.50000000000000E+2
1.50000000000000E+2      0.00000000000000E+0      0.00000000000000E+0
0.00000000000000E+0      0.00000000000000E+0      1.00000000000000E+0
    0.00000000000000E+0      0.00000000000000E+0      0.00000000000000E+0
   BmNSMass                 4     173       1     1.50000000000000E+2
1.50000000000000E+2      0.00000000000000E+0      0.00000000000000E+0
0.00000000000000E+0      0.00000000000000E+0      1.00000000000000E+0
    0.00000000000000E+0      0.00000000000000E+0      0.00000000000000E+0
   BmNSMass                 4     174       1     1.50000000000000E+2
1.50000000000000E+2      0.00000000000000E+0      0.00000000000000E+0
0.00000000000000E+0      0.00000000000000E+0      1.00000000000000E+0
    0.00000000000000E+0      0.00000000000000E+0      0.00000000000000E+0
   BmNSMass                 4     175       1     1.50000000000000E+2
1.50000000000000E+2      0.00000000000000E+0      0.00000000000000E+0
0.00000000000000E+0      0.00000000000000E+0      1.00000000000000E+0
    0.00000000000000E+0      0.00000000000000E+0      0.00000000000000E+0
   BmNSMass                 4     176       1     1.50000000000000E+2
1.50000000000000E+2      0.00000000000000E+0      0.00000000000000E+0
0.00000000000000E+0      0.00000000000000E+0      1.00000000000000E+0
```

```
    0.00000000000000E+0      0.00000000000000E+0      0.00000000000000E+0
   BmNSMass                    4     177        1     1.50000000000000E+2
1.50000000000000E+2      0.00000000000000E+0      0.00000000000000E+0
0.00000000000000E+0      0.00000000000000E+0      1.00000000000000E+0
    0.00000000000000E+0      0.00000000000000E+0      0.00000000000000E+0
   BmNSMass                    4     178        1     1.50000000000000E+2
1.50000000000000E+2      0.00000000000000E+0      0.00000000000000E+0
0.00000000000000E+0      0.00000000000000E+0      1.00000000000000E+0
    0.00000000000000E+0      0.00000000000000E+0      0.00000000000000E+0
   BmNSMass                    4     179        1     1.50000000000000E+2
1.50000000000000E+2      0.00000000000000E+0      0.00000000000000E+0
0.00000000000000E+0      0.00000000000000E+0      1.00000000000000E+0
    0.00000000000000E+0      0.00000000000000E+0      0.00000000000000E+0
   BmNSMass                    4     180        1     1.50000000000000E+2
1.50000000000000E+2      0.00000000000000E+0      0.00000000000000E+0
0.00000000000000E+0      0.00000000000000E+0      1.00000000000000E+0
    0.00000000000000E+0      0.00000000000000E+0      0.00000000000000E+0
   BmNSMass                    4     181        1     1.50000000000000E+2
1.50000000000000E+2      0.00000000000000E+0      0.00000000000000E+0
0.00000000000000E+0      0.00000000000000E+0      1.00000000000000E+0
    0.00000000000000E+0      0.00000000000000E+0      0.00000000000000E+0
   BmNSMass                    4     182        1     1.50000000000000E+2
1.50000000000000E+2      0.00000000000000E+0      0.00000000000000E+0
0.00000000000000E+0      0.00000000000000E+0      1.00000000000000E+0
    0.00000000000000E+0      0.00000000000000E+0      0.00000000000000E+0
   BmNSMass                    4     183        1     1.50000000000000E+2
1.50000000000000E+2      0.00000000000000E+0      0.00000000000000E+0
0.00000000000000E+0      0.00000000000000E+0      1.00000000000000E+0
    0.00000000000000E+0      0.00000000000000E+0      0.00000000000000E+0
   BmNSMass                    4     184        1     1.50000000000000E+2
1.50000000000000E+2      0.00000000000000E+0      0.00000000000000E+0
0.00000000000000E+0      0.00000000000000E+0      1.00000000000000E+0
    0.00000000000000E+0      0.00000000000000E+0      0.00000000000000E+0
   BmNSMass                    4     185        1     1.50000000000000E+2
1.50000000000000E+2      0.00000000000000E+0      0.00000000000000E+0
0.00000000000000E+0      0.00000000000000E+0      1.00000000000000E+0
    0.00000000000000E+0      0.00000000000000E+0      0.00000000000000E+0
   BmNSMass                    4     186        1     1.50000000000000E+2
1.50000000000000E+2      0.00000000000000E+0      0.00000000000000E+0
0.00000000000000E+0      0.00000000000000E+0      1.00000000000000E+0
    0.00000000000000E+0      0.00000000000000E+0      0.00000000000000E+0
   BmNSMass                    4     187        1     1.50000000000000E+2
1.50000000000000E+2      0.00000000000000E+0      0.00000000000000E+0
0.00000000000000E+0      0.00000000000000E+0      1.00000000000000E+0
    0.00000000000000E+0      0.00000000000000E+0      0.00000000000000E+0
   BmNSMass                    4     188        1     1.50000000000000E+2
1.50000000000000E+2      0.00000000000000E+0      0.00000000000000E+0
0.00000000000000E+0      0.00000000000000E+0      1.00000000000000E+0
    0.00000000000000E+0      0.00000000000000E+0      0.00000000000000E+0
   BmNSMass                    4     189        1     1.50000000000000E+2
1.50000000000000E+2      0.00000000000000E+0      0.00000000000000E+0
0.00000000000000E+0      0.00000000000000E+0      1.00000000000000E+0
    0.00000000000000E+0      0.00000000000000E+0      0.00000000000000E+0
   BmNSMass                    4     190        1     1.50000000000000E+2
```

```
1.50000000000000E+2      0.00000000000000E+0      0.00000000000000E+0
0.00000000000000E+0      0.00000000000000E+0      1.00000000000000E+0
    0.00000000000000E+0      0.00000000000000E+0      0.00000000000000E+0
   BmNSMass                 4     191         1     1.50000000000000E+2
1.50000000000000E+2      0.00000000000000E+0      0.00000000000000E+0
0.00000000000000E+0      0.00000000000000E+0      1.00000000000000E+0
    0.00000000000000E+0      0.00000000000000E+0      0.00000000000000E+0
   BmNSMass                 4     192         1     1.50000000000000E+2
1.50000000000000E+2      0.00000000000000E+0      0.00000000000000E+0
0.00000000000000E+0      0.00000000000000E+0      1.00000000000000E+0
    0.00000000000000E+0      0.00000000000000E+0      0.00000000000000E+0
   BmNSMass                 4     193         1     1.50000000000000E+2
1.50000000000000E+2      0.00000000000000E+0      0.00000000000000E+0
0.00000000000000E+0      0.00000000000000E+0      1.00000000000000E+0
    0.00000000000000E+0      0.00000000000000E+0      0.00000000000000E+0
   BmNSMass                 4     194         1     1.50000000000000E+2
1.50000000000000E+2      0.00000000000000E+0      0.00000000000000E+0
0.00000000000000E+0      0.00000000000000E+0      1.00000000000000E+0
    0.00000000000000E+0      0.00000000000000E+0      0.00000000000000E+0
   BmNSMass                 4     195         1     1.50000000000000E+2
1.50000000000000E+2      0.00000000000000E+0      0.00000000000000E+0
0.00000000000000E+0      0.00000000000000E+0      1.00000000000000E+0
    0.00000000000000E+0      0.00000000000000E+0      0.00000000000000E+0
   BmNSMass                 4     196         1     1.50000000000000E+2
1.50000000000000E+2      0.00000000000000E+0      0.00000000000000E+0
0.00000000000000E+0      0.00000000000000E+0      1.00000000000000E+0
    0.00000000000000E+0      0.00000000000000E+0      0.00000000000000E+0
   BmNSMass                 4     197         1     1.50000000000000E+2
1.50000000000000E+2      0.00000000000000E+0      0.00000000000000E+0
0.00000000000000E+0      0.00000000000000E+0      1.00000000000000E+0
    0.00000000000000E+0      0.00000000000000E+0      0.00000000000000E+0
   BmNSMass                 4     198         1     1.50000000000000E+2
1.50000000000000E+2      0.00000000000000E+0      0.00000000000000E+0
0.00000000000000E+0      0.00000000000000E+0      1.00000000000000E+0
    0.00000000000000E+0      0.00000000000000E+0      0.00000000000000E+0
   BmNSMass                 4     199         1     1.50000000000000E+2
1.50000000000000E+2      0.00000000000000E+0      0.00000000000000E+0
0.00000000000000E+0      0.00000000000000E+0      1.00000000000000E+0
    0.00000000000000E+0      0.00000000000000E+0      0.00000000000000E+0
   BmNSMass                 4     200         1     1.50000000000000E+2
1.50000000000000E+2      0.00000000000000E+0      0.00000000000000E+0
0.00000000000000E+0      0.00000000000000E+0      1.00000000000000E+0
    0.00000000000000E+0      0.00000000000000E+0      0.00000000000000E+0
   BmNSMass                 4     201         1     1.50000000000000E+2
1.50000000000000E+2      0.00000000000000E+0      0.00000000000000E+0
0.00000000000000E+0      0.00000000000000E+0      1.00000000000000E+0
    0.00000000000000E+0      0.00000000000000E+0      0.00000000000000E+0
   BmNSMass                 4     202         1     1.50000000000000E+2
1.50000000000000E+2      0.00000000000000E+0      0.00000000000000E+0
0.00000000000000E+0      0.00000000000000E+0      1.00000000000000E+0
    0.00000000000000E+0      0.00000000000000E+0      0.00000000000000E+0
   BmNSMass                 4     203         1     1.50000000000000E+2
1.50000000000000E+2      0.00000000000000E+0      0.00000000000000E+0
0.00000000000000E+0      0.00000000000000E+0      1.00000000000000E+0
```

```
    0.00000000000000E+0      0.00000000000000E+0      0.00000000000000E+0
   BmNSMass                  4      204        1     1.50000000000000E+2
1.50000000000000E+2      0.00000000000000E+0      0.00000000000000E+0
0.00000000000000E+0      0.00000000000000E+0      1.00000000000000E+0
    0.00000000000000E+0      0.00000000000000E+0      0.00000000000000E+0
   BmNSMass                  4      205        1     1.50000000000000E+2
1.50000000000000E+2      0.00000000000000E+0      0.00000000000000E+0
0.00000000000000E+0      0.00000000000000E+0      1.00000000000000E+0
    0.00000000000000E+0      0.00000000000000E+0      0.00000000000000E+0
   BmNSMass                  4      206        1     1.50000000000000E+2
1.50000000000000E+2      0.00000000000000E+0      0.00000000000000E+0
0.00000000000000E+0      0.00000000000000E+0      1.00000000000000E+0
    0.00000000000000E+0      0.00000000000000E+0      0.00000000000000E+0
   BmNSMass                  4      207        1     1.50000000000000E+2
1.50000000000000E+2      0.00000000000000E+0      0.00000000000000E+0
0.00000000000000E+0      0.00000000000000E+0      1.00000000000000E+0
    0.00000000000000E+0      0.00000000000000E+0      0.00000000000000E+0
   BmNSMass                  4      208        1     1.50000000000000E+2
1.50000000000000E+2      0.00000000000000E+0      0.00000000000000E+0
0.00000000000000E+0      0.00000000000000E+0      1.00000000000000E+0
    0.00000000000000E+0      0.00000000000000E+0      0.00000000000000E+0
   BmNSMass                  4      209        1     1.50000000000000E+2
1.50000000000000E+2      0.00000000000000E+0      0.00000000000000E+0
0.00000000000000E+0      0.00000000000000E+0      1.00000000000000E+0
    0.00000000000000E+0      0.00000000000000E+0      0.00000000000000E+0
   BmNSMass                  4      210        1     1.50000000000000E+2
1.50000000000000E+2      0.00000000000000E+0      0.00000000000000E+0
0.00000000000000E+0      0.00000000000000E+0      1.00000000000000E+0
    0.00000000000000E+0      0.00000000000000E+0      0.00000000000000E+0
   BmNSMass                  4      211        1     1.50000000000000E+2
1.50000000000000E+2      0.00000000000000E+0      0.00000000000000E+0
0.00000000000000E+0      0.00000000000000E+0      1.00000000000000E+0
    0.00000000000000E+0      0.00000000000000E+0      0.00000000000000E+0
   BmNSMass                  4      212        1     1.50000000000000E+2
1.50000000000000E+2      0.00000000000000E+0      0.00000000000000E+0
0.00000000000000E+0      0.00000000000000E+0      1.00000000000000E+0
    0.00000000000000E+0      0.00000000000000E+0      0.00000000000000E+0
   BmNSMass                  4      213        1     1.50000000000000E+2
1.50000000000000E+2      0.00000000000000E+0      0.00000000000000E+0
0.00000000000000E+0      0.00000000000000E+0      1.00000000000000E+0
    0.00000000000000E+0      0.00000000000000E+0      0.00000000000000E+0
   BmNSMass                  4      214        1     1.50000000000000E+2
1.50000000000000E+2      0.00000000000000E+0      0.00000000000000E+0
0.00000000000000E+0      0.00000000000000E+0      1.00000000000000E+0
    0.00000000000000E+0      0.00000000000000E+0      0.00000000000000E+0
   BmNSMass                  4      215        1     1.50000000000000E+2
1.50000000000000E+2      0.00000000000000E+0      0.00000000000000E+0
0.00000000000000E+0      0.00000000000000E+0      1.00000000000000E+0
    0.00000000000000E+0      0.00000000000000E+0      0.00000000000000E+0
   BmNSMass                  4      216        1     1.50000000000000E+2
1.50000000000000E+2      0.00000000000000E+0      0.00000000000000E+0
0.00000000000000E+0      0.00000000000000E+0      1.00000000000000E+0
    0.00000000000000E+0      0.00000000000000E+0      0.00000000000000E+0
   BmNSMass                  4      217        1     1.50000000000000E+2
```

```
1.50000000000000E+2      0.00000000000000E+0      0.00000000000000E+0
0.00000000000000E+0      0.00000000000000E+0      1.00000000000000E+0
    0.00000000000000E+0      0.00000000000000E+0      0.00000000000000E+0
   BmNSMass                 4     218         1     3.00000000000000E+2
3.00000000000000E+2      0.00000000000000E+0      0.00000000000000E+0
0.00000000000000E+0      0.00000000000000E+0      1.00000000000000E+0
    0.00000000000000E+0      0.00000000000000E+0      0.00000000000000E+0
   BmNSMass                 4     219         1     3.00000000000000E+2
3.00000000000000E+2      0.00000000000000E+0      0.00000000000000E+0
0.00000000000000E+0      0.00000000000000E+0      1.00000000000000E+0
    0.00000000000000E+0      0.00000000000000E+0      0.00000000000000E+0
   BmNSMass                 4     220         1     3.00000000000000E+2
3.00000000000000E+2      0.00000000000000E+0      0.00000000000000E+0
0.00000000000000E+0      0.00000000000000E+0      1.00000000000000E+0
    0.00000000000000E+0      0.00000000000000E+0      0.00000000000000E+0
   BmNSMass                 4     221         1     3.00000000000000E+2
3.00000000000000E+2      0.00000000000000E+0      0.00000000000000E+0
0.00000000000000E+0      0.00000000000000E+0      1.00000000000000E+0
    0.00000000000000E+0      0.00000000000000E+0      0.00000000000000E+0
   BmNSMass                 4     222         1     3.00000000000000E+2
3.00000000000000E+2      0.00000000000000E+0      0.00000000000000E+0
0.00000000000000E+0      0.00000000000000E+0      1.00000000000000E+0
    0.00000000000000E+0      0.00000000000000E+0      0.00000000000000E+0
   BmNSMass                 4     223         1     3.00000000000000E+2
3.00000000000000E+2      0.00000000000000E+0      0.00000000000000E+0
0.00000000000000E+0      0.00000000000000E+0      1.00000000000000E+0
    0.00000000000000E+0      0.00000000000000E+0      0.00000000000000E+0
   BmNSMass                 4     224         1     3.00000000000000E+2
3.00000000000000E+2      0.00000000000000E+0      0.00000000000000E+0
0.00000000000000E+0      0.00000000000000E+0      1.00000000000000E+0
    0.00000000000000E+0      0.00000000000000E+0      0.00000000000000E+0
   BmNSMass                 4     225         1     3.00000000000000E+2
3.00000000000000E+2      0.00000000000000E+0      0.00000000000000E+0
0.00000000000000E+0      0.00000000000000E+0      1.00000000000000E+0
    0.00000000000000E+0      0.00000000000000E+0      0.00000000000000E+0
   BmNSMass                 4     226         1     3.00000000000000E+2
3.00000000000000E+2      0.00000000000000E+0      0.00000000000000E+0
0.00000000000000E+0      0.00000000000000E+0      1.00000000000000E+0
    0.00000000000000E+0      0.00000000000000E+0      0.00000000000000E+0
   BmNSMass                 4     227         1     3.00000000000000E+2
3.00000000000000E+2      0.00000000000000E+0      0.00000000000000E+0
0.00000000000000E+0      0.00000000000000E+0      1.00000000000000E+0
    0.00000000000000E+0      0.00000000000000E+0      0.00000000000000E+0
   BmNSMass                 4     228         1     3.00000000000000E+2
3.00000000000000E+2      0.00000000000000E+0      0.00000000000000E+0
0.00000000000000E+0      0.00000000000000E+0      1.00000000000000E+0
    0.00000000000000E+0      0.00000000000000E+0      0.00000000000000E+0
   BmNSMass                 4     229         1     3.00000000000000E+2
3.00000000000000E+2      0.00000000000000E+0      0.00000000000000E+0
0.00000000000000E+0      0.00000000000000E+0      1.00000000000000E+0
    0.00000000000000E+0      0.00000000000000E+0      0.00000000000000E+0
   BmNSMass                 4     230         1     3.00000000000000E+2
3.00000000000000E+2      0.00000000000000E+0      0.00000000000000E+0
0.00000000000000E+0      0.00000000000000E+0      1.00000000000000E+0
```

```
    0.00000000000000E+0      0.00000000000000E+0      0.00000000000000E+0
   BmNSMass                 4     231        1     3.00000000000000E+2
3.00000000000000E+2      0.00000000000000E+0      0.00000000000000E+0
0.00000000000000E+0      0.00000000000000E+0      1.00000000000000E+0
    0.00000000000000E+0      0.00000000000000E+0      0.00000000000000E+0
   BmNSMass                 4     232        1     3.00000000000000E+2
3.00000000000000E+2      0.00000000000000E+0      0.00000000000000E+0
0.00000000000000E+0      0.00000000000000E+0      1.00000000000000E+0
    0.00000000000000E+0      0.00000000000000E+0      0.00000000000000E+0
   BmNSMass                 4     233        1     3.00000000000000E+2
3.00000000000000E+2      0.00000000000000E+0      0.00000000000000E+0
0.00000000000000E+0      0.00000000000000E+0      1.00000000000000E+0
    0.00000000000000E+0      0.00000000000000E+0      0.00000000000000E+0
   BmNSMass                 4     234        1     3.00000000000000E+2
3.00000000000000E+2      0.00000000000000E+0      0.00000000000000E+0
0.00000000000000E+0      0.00000000000000E+0      1.00000000000000E+0
    0.00000000000000E+0      0.00000000000000E+0      0.00000000000000E+0
   BmNSMass                 4     235        1     3.00000000000000E+2
3.00000000000000E+2      0.00000000000000E+0      0.00000000000000E+0
0.00000000000000E+0      0.00000000000000E+0      1.00000000000000E+0
    0.00000000000000E+0      0.00000000000000E+0      0.00000000000000E+0
   BmNSMass                 4     236        1     3.00000000000000E+2
3.00000000000000E+2      0.00000000000000E+0      0.00000000000000E+0
0.00000000000000E+0      0.00000000000000E+0      1.00000000000000E+0
    0.00000000000000E+0      0.00000000000000E+0      0.00000000000000E+0
   BmNSMass                 4     237        1     3.00000000000000E+2
3.00000000000000E+2      0.00000000000000E+0      0.00000000000000E+0
0.00000000000000E+0      0.00000000000000E+0      1.00000000000000E+0
    0.00000000000000E+0      0.00000000000000E+0      0.00000000000000E+0
   BmNSMass                 4     238        1     3.00000000000000E+2
3.00000000000000E+2      0.00000000000000E+0      0.00000000000000E+0
0.00000000000000E+0      0.00000000000000E+0      1.00000000000000E+0
    0.00000000000000E+0      0.00000000000000E+0      0.00000000000000E+0
   BmNSMass                 4     239        1     3.00000000000000E+2
3.00000000000000E+2      0.00000000000000E+0      0.00000000000000E+0
0.00000000000000E+0      0.00000000000000E+0      1.00000000000000E+0
    0.00000000000000E+0      0.00000000000000E+0      0.00000000000000E+0
   BmNSMass                 4     240        1     3.00000000000000E+2
3.00000000000000E+2      0.00000000000000E+0      0.00000000000000E+0
0.00000000000000E+0      0.00000000000000E+0      1.00000000000000E+0
    0.00000000000000E+0      0.00000000000000E+0      0.00000000000000E+0
   BmNSMass                 4     241        1     3.00000000000000E+2
3.00000000000000E+2      0.00000000000000E+0      0.00000000000000E+0
0.00000000000000E+0      0.00000000000000E+0      1.00000000000000E+0
    0.00000000000000E+0      0.00000000000000E+0      0.00000000000000E+0
   BmNSMass                 4     242        1     3.00000000000000E+2
3.00000000000000E+2      0.00000000000000E+0      0.00000000000000E+0
0.00000000000000E+0      0.00000000000000E+0      1.00000000000000E+0
    0.00000000000000E+0      0.00000000000000E+0      0.00000000000000E+0
   BmNSMass                 4     243        1     3.00000000000000E+2
3.00000000000000E+2      0.00000000000000E+0      0.00000000000000E+0
0.00000000000000E+0      0.00000000000000E+0      1.00000000000000E+0
    0.00000000000000E+0      0.00000000000000E+0      0.00000000000000E+0
   BmNSMass                 4     244        1     3.00000000000000E+2
```

```
3.00000000000000E+2      0.00000000000000E+0      0.00000000000000E+0
0.00000000000000E+0      0.00000000000000E+0      1.00000000000000E+0
    0.00000000000000E+0      0.00000000000000E+0      0.00000000000000E+0
   BmNSMass                4      245        1      3.00000000000000E+2
3.00000000000000E+2      0.00000000000000E+0      0.00000000000000E+0
0.00000000000000E+0      0.00000000000000E+0      1.00000000000000E+0
    0.00000000000000E+0      0.00000000000000E+0      0.00000000000000E+0
   BmNSMass                4      246        1      3.00000000000000E+2
3.00000000000000E+2      0.00000000000000E+0      0.00000000000000E+0
0.00000000000000E+0      0.00000000000000E+0      1.00000000000000E+0
    0.00000000000000E+0      0.00000000000000E+0      0.00000000000000E+0
   BmNSMass                4      247        1      3.00000000000000E+2
3.00000000000000E+2      0.00000000000000E+0      0.00000000000000E+0
0.00000000000000E+0      0.00000000000000E+0      1.00000000000000E+0
    0.00000000000000E+0      0.00000000000000E+0      0.00000000000000E+0
   BmNSMass                4      248        1      3.00000000000000E+2
3.00000000000000E+2      0.00000000000000E+0      0.00000000000000E+0
0.00000000000000E+0      0.00000000000000E+0      1.00000000000000E+0
    0.00000000000000E+0      0.00000000000000E+0      0.00000000000000E+0
   BmNSMass                4      249        1      3.00000000000000E+2
3.00000000000000E+2      0.00000000000000E+0      0.00000000000000E+0
0.00000000000000E+0      0.00000000000000E+0      1.00000000000000E+0
    0.00000000000000E+0      0.00000000000000E+0      0.00000000000000E+0
   BmNSMass                4      250        1      3.00000000000000E+2
3.00000000000000E+2      0.00000000000000E+0      0.00000000000000E+0
0.00000000000000E+0      0.00000000000000E+0      1.00000000000000E+0
    0.00000000000000E+0      0.00000000000000E+0      0.00000000000000E+0
   BmNSMass                4      251        1      3.00000000000000E+2
3.00000000000000E+2      0.00000000000000E+0      0.00000000000000E+0
0.00000000000000E+0      0.00000000000000E+0      1.00000000000000E+0
    0.00000000000000E+0      0.00000000000000E+0      0.00000000000000E+0
   BmNSMass                4      252        1      3.00000000000000E+2
3.00000000000000E+2      0.00000000000000E+0      0.00000000000000E+0
0.00000000000000E+0      0.00000000000000E+0      1.00000000000000E+0
    0.00000000000000E+0      0.00000000000000E+0      0.00000000000000E+0
   BmNSMass                4      253        1      3.00000000000000E+2
3.00000000000000E+2      0.00000000000000E+0      0.00000000000000E+0
0.00000000000000E+0      0.00000000000000E+0      1.00000000000000E+0
    0.00000000000000E+0      0.00000000000000E+0      0.00000000000000E+0
   BmNSMass                4      254        1      3.00000000000000E+2
3.00000000000000E+2      0.00000000000000E+0      0.00000000000000E+0
0.00000000000000E+0      0.00000000000000E+0      1.00000000000000E+0
    0.00000000000000E+0      0.00000000000000E+0      0.00000000000000E+0
   BmNSMass                4      255        1      3.00000000000000E+2
3.00000000000000E+2      0.00000000000000E+0      0.00000000000000E+0
0.00000000000000E+0      0.00000000000000E+0      1.00000000000000E+0
    0.00000000000000E+0      0.00000000000000E+0      0.00000000000000E+0
   BmNSMass                4      256        1      3.00000000000000E+2
3.00000000000000E+2      0.00000000000000E+0      0.00000000000000E+0
0.00000000000000E+0      0.00000000000000E+0      1.00000000000000E+0
    0.00000000000000E+0      0.00000000000000E+0      0.00000000000000E+0
   BmNSMass                4      257        1      3.00000000000000E+2
3.00000000000000E+2      0.00000000000000E+0      0.00000000000000E+0
0.00000000000000E+0      0.00000000000000E+0      1.00000000000000E+0
```

```
    0.00000000000000E+0      0.00000000000000E+0      0.00000000000000E+0
   BmNSMass                 4      258        1      3.00000000000000E+2
3.00000000000000E+2      0.00000000000000E+0      0.00000000000000E+0
0.00000000000000E+0      0.00000000000000E+0      1.00000000000000E+0
    0.00000000000000E+0      0.00000000000000E+0      0.00000000000000E+0
   BmNSMass                 4      259        1      3.00000000000000E+2
3.00000000000000E+2      0.00000000000000E+0      0.00000000000000E+0
0.00000000000000E+0      0.00000000000000E+0      1.00000000000000E+0
    0.00000000000000E+0      0.00000000000000E+0      0.00000000000000E+0
   BmNSMass                 4      260        1      3.00000000000000E+2
3.00000000000000E+2      0.00000000000000E+0      0.00000000000000E+0
0.00000000000000E+0      0.00000000000000E+0      1.00000000000000E+0
    0.00000000000000E+0      0.00000000000000E+0      0.00000000000000E+0
   BmNSMass                 4      261        1      3.00000000000000E+2
3.00000000000000E+2      0.00000000000000E+0      0.00000000000000E+0
0.00000000000000E+0      0.00000000000000E+0      1.00000000000000E+0
    0.00000000000000E+0      0.00000000000000E+0      0.00000000000000E+0
   BmNSMass                 4      262        1      3.00000000000000E+2
3.00000000000000E+2      0.00000000000000E+0      0.00000000000000E+0
0.00000000000000E+0      0.00000000000000E+0      1.00000000000000E+0
    0.00000000000000E+0      0.00000000000000E+0      0.00000000000000E+0
   BmNSMass                 4      263        1      3.00000000000000E+2
3.00000000000000E+2      0.00000000000000E+0      0.00000000000000E+0
0.00000000000000E+0      0.00000000000000E+0      1.00000000000000E+0
    0.00000000000000E+0      0.00000000000000E+0      0.00000000000000E+0
   BmNSMass                 4      264        1      3.00000000000000E+2
3.00000000000000E+2      0.00000000000000E+0      0.00000000000000E+0
0.00000000000000E+0      0.00000000000000E+0      1.00000000000000E+0
    0.00000000000000E+0      0.00000000000000E+0      0.00000000000000E+0
   BmNSMass                 4      265        1      3.00000000000000E+2
3.00000000000000E+2      0.00000000000000E+0      0.00000000000000E+0
0.00000000000000E+0      0.00000000000000E+0      1.00000000000000E+0
    0.00000000000000E+0      0.00000000000000E+0      0.00000000000000E+0
   BmNSMass                 4      266        1      3.00000000000000E+2
3.00000000000000E+2      0.00000000000000E+0      0.00000000000000E+0
0.00000000000000E+0      0.00000000000000E+0      1.00000000000000E+0
    0.00000000000000E+0      0.00000000000000E+0      0.00000000000000E+0
   BmNSMass                 4      267        1      3.00000000000000E+2
3.00000000000000E+2      0.00000000000000E+0      0.00000000000000E+0
0.00000000000000E+0      0.00000000000000E+0      1.00000000000000E+0
    0.00000000000000E+0      0.00000000000000E+0      0.00000000000000E+0
   BmNSMass                 4      268        1      3.00000000000000E+2
3.00000000000000E+2      0.00000000000000E+0      0.00000000000000E+0
0.00000000000000E+0      0.00000000000000E+0      1.00000000000000E+0
    0.00000000000000E+0      0.00000000000000E+0      0.00000000000000E+0
   BmNSMass                 4      269        1      3.00000000000000E+2
3.00000000000000E+2      0.00000000000000E+0      0.00000000000000E+0
0.00000000000000E+0      0.00000000000000E+0      1.00000000000000E+0
    0.00000000000000E+0      0.00000000000000E+0      0.00000000000000E+0
   BmNSMass                 4      270        1      3.00000000000000E+2
3.00000000000000E+2      0.00000000000000E+0      0.00000000000000E+0
0.00000000000000E+0      0.00000000000000E+0      1.00000000000000E+0
    0.00000000000000E+0      0.00000000000000E+0      0.00000000000000E+0
   BmNSMass                 4      271        1      3.00000000000000E+2
```

```
3.00000000000000E+2      0.00000000000000E+0      0.00000000000000E+0
0.00000000000000E+0      0.00000000000000E+0      1.00000000000000E+0
    0.00000000000000E+0      0.00000000000000E+0      0.00000000000000E+0
   BmNSMass                 4     272       1     3.00000000000000E+2
3.00000000000000E+2      0.00000000000000E+0      0.00000000000000E+0
0.00000000000000E+0      0.00000000000000E+0      1.00000000000000E+0
    0.00000000000000E+0      0.00000000000000E+0      0.00000000000000E+0
   BmNSMass                 4     273       1     3.00000000000000E+2
3.00000000000000E+2      0.00000000000000E+0      0.00000000000000E+0
0.00000000000000E+0      0.00000000000000E+0      1.00000000000000E+0
    0.00000000000000E+0      0.00000000000000E+0      0.00000000000000E+0
   BmNSMass                 4     274       1     3.00000000000000E+2
3.00000000000000E+2      0.00000000000000E+0      0.00000000000000E+0
0.00000000000000E+0      0.00000000000000E+0      1.00000000000000E+0
    0.00000000000000E+0      0.00000000000000E+0      0.00000000000000E+0
   BmNSMass                 4     275       1     3.00000000000000E+2
3.00000000000000E+2      0.00000000000000E+0      0.00000000000000E+0
0.00000000000000E+0      0.00000000000000E+0      1.00000000000000E+0
    0.00000000000000E+0      0.00000000000000E+0      0.00000000000000E+0
   BmNSMass                 4     276       1     3.00000000000000E+2
3.00000000000000E+2      0.00000000000000E+0      0.00000000000000E+0
0.00000000000000E+0      0.00000000000000E+0      1.00000000000000E+0
    0.00000000000000E+0      0.00000000000000E+0      0.00000000000000E+0
   BmNSMass                 4     277       1     3.00000000000000E+2
3.00000000000000E+2      0.00000000000000E+0      0.00000000000000E+0
0.00000000000000E+0      0.00000000000000E+0      1.00000000000000E+0
    0.00000000000000E+0      0.00000000000000E+0      0.00000000000000E+0
   BmNSMass                 4     278       1     3.00000000000000E+2
3.00000000000000E+2      0.00000000000000E+0      0.00000000000000E+0
0.00000000000000E+0      0.00000000000000E+0      1.00000000000000E+0
    0.00000000000000E+0      0.00000000000000E+0      0.00000000000000E+0
   BmNSMass                 4     279       1     3.00000000000000E+2
3.00000000000000E+2      0.00000000000000E+0      0.00000000000000E+0
0.00000000000000E+0      0.00000000000000E+0      1.00000000000000E+0
    0.00000000000000E+0      0.00000000000000E+0      0.00000000000000E+0
   BmNSMass                 4     280       1     3.00000000000000E+2
3.00000000000000E+2      0.00000000000000E+0      0.00000000000000E+0
0.00000000000000E+0      0.00000000000000E+0      1.00000000000000E+0
    0.00000000000000E+0      0.00000000000000E+0      0.00000000000000E+0
   BmNSMass                 4     281       1     3.00000000000000E+2
3.00000000000000E+2      0.00000000000000E+0      0.00000000000000E+0
0.00000000000000E+0      0.00000000000000E+0      1.00000000000000E+0
    0.00000000000000E+0      0.00000000000000E+0      0.00000000000000E+0
   BmNSMass                 4     282       1     3.00000000000000E+2
3.00000000000000E+2      0.00000000000000E+0      0.00000000000000E+0
0.00000000000000E+0      0.00000000000000E+0      1.00000000000000E+0
    0.00000000000000E+0      0.00000000000000E+0      0.00000000000000E+0
   BmNSMass                 4     283       1     3.00000000000000E+2
3.00000000000000E+2      0.00000000000000E+0      0.00000000000000E+0
0.00000000000000E+0      0.00000000000000E+0      1.00000000000000E+0
    0.00000000000000E+0      0.00000000000000E+0      0.00000000000000E+0
   BmNSMass                 4     284       1     3.00000000000000E+2
3.00000000000000E+2      0.00000000000000E+0      0.00000000000000E+0
0.00000000000000E+0      0.00000000000000E+0      1.00000000000000E+0
```

```
    0.00000000000000E+0      0.00000000000000E+0      0.00000000000000E+0
   BmNSMass                 4     285       1     3.00000000000000E+2
3.00000000000000E+2      0.00000000000000E+0      0.00000000000000E+0
0.00000000000000E+0      0.00000000000000E+0      1.00000000000000E+0
    0.00000000000000E+0      0.00000000000000E+0      0.00000000000000E+0
   BmNSMass                 4     286       1     3.00000000000000E+2
3.00000000000000E+2      0.00000000000000E+0      0.00000000000000E+0
0.00000000000000E+0      0.00000000000000E+0      1.00000000000000E+0
    0.00000000000000E+0      0.00000000000000E+0      0.00000000000000E+0
   BmNSMass                 4     287       1     3.00000000000000E+2
3.00000000000000E+2      0.00000000000000E+0      0.00000000000000E+0
0.00000000000000E+0      0.00000000000000E+0      1.00000000000000E+0
    0.00000000000000E+0      0.00000000000000E+0      0.00000000000000E+0
   BmNSMass                 4     288       1     3.00000000000000E+2
3.00000000000000E+2      0.00000000000000E+0      0.00000000000000E+0
0.00000000000000E+0      0.00000000000000E+0      1.00000000000000E+0
    0.00000000000000E+0      0.00000000000000E+0      0.00000000000000E+0
   BmNSMass                 4     289       1     3.00000000000000E+2
3.00000000000000E+2      0.00000000000000E+0      0.00000000000000E+0
0.00000000000000E+0      0.00000000000000E+0      1.00000000000000E+0
    0.00000000000000E+0      0.00000000000000E+0      0.00000000000000E+0
   BmNSMass                 4     290       1     3.00000000000000E+2
3.00000000000000E+2      0.00000000000000E+0      0.00000000000000E+0
0.00000000000000E+0      0.00000000000000E+0      1.00000000000000E+0
    0.00000000000000E+0      0.00000000000000E+0      0.00000000000000E+0
   BmNSMass                 4     291       1     3.00000000000000E+2
3.00000000000000E+2      0.00000000000000E+0      0.00000000000000E+0
0.00000000000000E+0      0.00000000000000E+0      1.00000000000000E+0
    0.00000000000000E+0      0.00000000000000E+0      0.00000000000000E+0
   BmNSMass                 4     292       1     3.00000000000000E+2
3.00000000000000E+2      0.00000000000000E+0      0.00000000000000E+0
0.00000000000000E+0      0.00000000000000E+0      1.00000000000000E+0
    0.00000000000000E+0      0.00000000000000E+0      0.00000000000000E+0
   BmNSMass                 4     293       1     3.00000000000000E+2
3.00000000000000E+2      0.00000000000000E+0      0.00000000000000E+0
0.00000000000000E+0      0.00000000000000E+0      1.00000000000000E+0
    0.00000000000000E+0      0.00000000000000E+0      0.00000000000000E+0
   BmNSMass                 4     294       1     3.00000000000000E+2
3.00000000000000E+2      0.00000000000000E+0      0.00000000000000E+0
0.00000000000000E+0      0.00000000000000E+0      1.00000000000000E+0
    0.00000000000000E+0      0.00000000000000E+0      0.00000000000000E+0
   BmNSMass                 4     295       1     3.00000000000000E+2
3.00000000000000E+2      0.00000000000000E+0      0.00000000000000E+0
0.00000000000000E+0      0.00000000000000E+0      1.00000000000000E+0
    0.00000000000000E+0      0.00000000000000E+0      0.00000000000000E+0
   BmNSMass                 4     296       1     3.00000000000000E+2
3.00000000000000E+2      0.00000000000000E+0      0.00000000000000E+0
0.00000000000000E+0      0.00000000000000E+0      1.00000000000000E+0
    0.00000000000000E+0      0.00000000000000E+0      0.00000000000000E+0
   BmNSMass                 4     297       1     3.00000000000000E+2
3.00000000000000E+2      0.00000000000000E+0      0.00000000000000E+0
0.00000000000000E+0      0.00000000000000E+0      1.00000000000000E+0
    0.00000000000000E+0      0.00000000000000E+0      0.00000000000000E+0
   BmNSMass                 4     298       1     3.00000000000000E+2
```

```
3.00000000000000E+2      0.00000000000000E+0      0.00000000000000E+0
0.00000000000000E+0      0.00000000000000E+0      1.00000000000000E+0
    0.00000000000000E+0      0.00000000000000E+0      0.00000000000000E+0
   BmNSMass                 4    299          1     3.00000000000000E+2
3.00000000000000E+2      0.00000000000000E+0      0.00000000000000E+0
0.00000000000000E+0      0.00000000000000E+0      1.00000000000000E+0
    0.00000000000000E+0      0.00000000000000E+0      0.00000000000000E+0
   BmNSMass                 4    300          1     3.00000000000000E+2
3.00000000000000E+2      0.00000000000000E+0      0.00000000000000E+0
0.00000000000000E+0      0.00000000000000E+0      1.00000000000000E+0
    0.00000000000000E+0      0.00000000000000E+0      0.00000000000000E+0
   BmNSMass                 4    301          1     3.00000000000000E+2
3.00000000000000E+2      0.00000000000000E+0      0.00000000000000E+0
0.00000000000000E+0      0.00000000000000E+0      1.00000000000000E+0
    0.00000000000000E+0      0.00000000000000E+0      0.00000000000000E+0
   BmNSMass                 4    302          1     3.00000000000000E+2
3.00000000000000E+2      0.00000000000000E+0      0.00000000000000E+0
0.00000000000000E+0      0.00000000000000E+0      1.00000000000000E+0
    0.00000000000000E+0      0.00000000000000E+0      0.00000000000000E+0
   BmNSMass                 4    303          1     3.00000000000000E+2
3.00000000000000E+2      0.00000000000000E+0      0.00000000000000E+0
0.00000000000000E+0      0.00000000000000E+0      1.00000000000000E+0
    0.00000000000000E+0      0.00000000000000E+0      0.00000000000000E+0
   BmNSMass                 4    304          1     3.00000000000000E+2
3.00000000000000E+2      0.00000000000000E+0      0.00000000000000E+0
0.00000000000000E+0      0.00000000000000E+0      1.00000000000000E+0
    0.00000000000000E+0      0.00000000000000E+0      0.00000000000000E+0
   BmNSMass                 4    305          1     3.00000000000000E+2
3.00000000000000E+2      0.00000000000000E+0      0.00000000000000E+0
0.00000000000000E+0      0.00000000000000E+0      1.00000000000000E+0
    0.00000000000000E+0      0.00000000000000E+0      0.00000000000000E+0
   BmNSMass                 4    306          1     3.00000000000000E+2
3.00000000000000E+2      0.00000000000000E+0      0.00000000000000E+0
0.00000000000000E+0      0.00000000000000E+0      1.00000000000000E+0
    0.00000000000000E+0      0.00000000000000E+0      0.00000000000000E+0
   BmNSMass                 4    307          1     3.00000000000000E+2
3.00000000000000E+2      0.00000000000000E+0      0.00000000000000E+0
0.00000000000000E+0      0.00000000000000E+0      1.00000000000000E+0
    0.00000000000000E+0      0.00000000000000E+0      0.00000000000000E+0
   BmNSMass                 4    308          1     3.00000000000000E+2
3.00000000000000E+2      0.00000000000000E+0      0.00000000000000E+0
0.00000000000000E+0      0.00000000000000E+0      1.00000000000000E+0
    0.00000000000000E+0      0.00000000000000E+0      0.00000000000000E+0
   BmNSMass                 4    309          1     3.00000000000000E+2
3.00000000000000E+2      0.00000000000000E+0      0.00000000000000E+0
0.00000000000000E+0      0.00000000000000E+0      1.00000000000000E+0
    0.00000000000000E+0      0.00000000000000E+0      0.00000000000000E+0
   BmNSMass                 4    310          1     3.00000000000000E+2
3.00000000000000E+2      0.00000000000000E+0      0.00000000000000E+0
0.00000000000000E+0      0.00000000000000E+0      1.00000000000000E+0
    0.00000000000000E+0      0.00000000000000E+0      0.00000000000000E+0
   BmNSMass                 4    311          1     3.00000000000000E+2
3.00000000000000E+2      0.00000000000000E+0      0.00000000000000E+0
0.00000000000000E+0      0.00000000000000E+0      1.00000000000000E+0
```

```
    0.00000000000000E+0      0.00000000000000E+0      0.00000000000000E+0
   BmNSMass                 4     312        1     3.00000000000000E+2
3.00000000000000E+2      0.00000000000000E+0      0.00000000000000E+0
0.00000000000000E+0      0.00000000000000E+0      1.00000000000000E+0
    0.00000000000000E+0      0.00000000000000E+0      0.00000000000000E+0
   BmNSMass                 4     313        1     3.00000000000000E+2
3.00000000000000E+2      0.00000000000000E+0      0.00000000000000E+0
0.00000000000000E+0      0.00000000000000E+0      1.00000000000000E+0
    0.00000000000000E+0      0.00000000000000E+0      0.00000000000000E+0
   BmNSMass                 4     314        1     3.00000000000000E+2
3.00000000000000E+2      0.00000000000000E+0      0.00000000000000E+0
0.00000000000000E+0      0.00000000000000E+0      1.00000000000000E+0
    0.00000000000000E+0      0.00000000000000E+0      0.00000000000000E+0
   BmNSMass                 4     315        1     3.00000000000000E+2
3.00000000000000E+2      0.00000000000000E+0      0.00000000000000E+0
0.00000000000000E+0      0.00000000000000E+0      1.00000000000000E+0
    0.00000000000000E+0      0.00000000000000E+0      0.00000000000000E+0
   BmNSMass                 4     316        1     3.00000000000000E+2
3.00000000000000E+2      0.00000000000000E+0      0.00000000000000E+0
0.00000000000000E+0      0.00000000000000E+0      1.00000000000000E+0
    0.00000000000000E+0      0.00000000000000E+0      0.00000000000000E+0
   BmNSMass                 4     317        1     3.00000000000000E+2
3.00000000000000E+2      0.00000000000000E+0      0.00000000000000E+0
0.00000000000000E+0      0.00000000000000E+0      1.00000000000000E+0
    0.00000000000000E+0      0.00000000000000E+0      0.00000000000000E+0
   BmNSMass                 4     318        1     3.00000000000000E+2
3.00000000000000E+2      0.00000000000000E+0      0.00000000000000E+0
0.00000000000000E+0      0.00000000000000E+0      1.00000000000000E+0
    0.00000000000000E+0      0.00000000000000E+0      0.00000000000000E+0
   BmNSMass                 4     319        1     3.00000000000000E+2
3.00000000000000E+2      0.00000000000000E+0      0.00000000000000E+0
0.00000000000000E+0      0.00000000000000E+0      1.00000000000000E+0
    0.00000000000000E+0      0.00000000000000E+0      0.00000000000000E+0
   BmNSMass                 4     320        1     3.00000000000000E+2
3.00000000000000E+2      0.00000000000000E+0      0.00000000000000E+0
0.00000000000000E+0      0.00000000000000E+0      1.00000000000000E+0
    0.00000000000000E+0      0.00000000000000E+0      0.00000000000000E+0
   BmNSMass                 4     321        1     3.00000000000000E+2
3.00000000000000E+2      0.00000000000000E+0      0.00000000000000E+0
0.00000000000000E+0      0.00000000000000E+0      1.00000000000000E+0
    0.00000000000000E+0      0.00000000000000E+0      0.00000000000000E+0
   BmNSMass                 4     322        1     3.00000000000000E+2
3.00000000000000E+2      0.00000000000000E+0      0.00000000000000E+0
0.00000000000000E+0      0.00000000000000E+0      1.00000000000000E+0
    0.00000000000000E+0      0.00000000000000E+0      0.00000000000000E+0
   BmNSMass                 4     323        1     3.00000000000000E+2
3.00000000000000E+2      0.00000000000000E+0      0.00000000000000E+0
0.00000000000000E+0      0.00000000000000E+0      1.00000000000000E+0
    0.00000000000000E+0      0.00000000000000E+0      0.00000000000000E+0
   BmNSMass                 4     324        1     3.00000000000000E+2
3.00000000000000E+2      0.00000000000000E+0      0.00000000000000E+0
0.00000000000000E+0      0.00000000000000E+0      1.00000000000000E+0
    0.00000000000000E+0      0.00000000000000E+0      0.00000000000000E+0
   BmNSMass                 4     325        1     3.00000000000000E+2
```

```
3.00000000000000E+2      0.00000000000000E+0      0.00000000000000E+0
0.00000000000000E+0      0.00000000000000E+0      1.00000000000000E+0
    0.00000000000000E+0      0.00000000000000E+0      0.00000000000000E+0
   BmNSMass                4     326        1      3.00000000000000E+2
3.00000000000000E+2      0.00000000000000E+0      0.00000000000000E+0
0.00000000000000E+0      0.00000000000000E+0      1.00000000000000E+0
    0.00000000000000E+0      0.00000000000000E+0      0.00000000000000E+0
   BmNSMass                4     327        1      3.00000000000000E+2
3.00000000000000E+2      0.00000000000000E+0      0.00000000000000E+0
0.00000000000000E+0      0.00000000000000E+0      1.00000000000000E+0
    0.00000000000000E+0      0.00000000000000E+0      0.00000000000000E+0
   BmNSMass                4     328        1      3.00000000000000E+2
3.00000000000000E+2      0.00000000000000E+0      0.00000000000000E+0
0.00000000000000E+0      0.00000000000000E+0      1.00000000000000E+0
    0.00000000000000E+0      0.00000000000000E+0      0.00000000000000E+0
   BmNSMass                4     329        1      3.00000000000000E+2
3.00000000000000E+2      0.00000000000000E+0      0.00000000000000E+0
0.00000000000000E+0      0.00000000000000E+0      1.00000000000000E+0
    0.00000000000000E+0      0.00000000000000E+0      0.00000000000000E+0
   BmNSMass                4     330        1      3.00000000000000E+2
3.00000000000000E+2      0.00000000000000E+0      0.00000000000000E+0
0.00000000000000E+0      0.00000000000000E+0      1.00000000000000E+0
    0.00000000000000E+0      0.00000000000000E+0      0.00000000000000E+0
   BmNSMass                4     331        1      3.00000000000000E+2
3.00000000000000E+2      0.00000000000000E+0      0.00000000000000E+0
0.00000000000000E+0      0.00000000000000E+0      1.00000000000000E+0
    0.00000000000000E+0      0.00000000000000E+0      0.00000000000000E+0
   BmNSMass                4     332        1      3.00000000000000E+2
3.00000000000000E+2      0.00000000000000E+0      0.00000000000000E+0
0.00000000000000E+0      0.00000000000000E+0      1.00000000000000E+0
    0.00000000000000E+0      0.00000000000000E+0      0.00000000000000E+0
   BmNSMass                4     333        1      3.00000000000000E+2
3.00000000000000E+2      0.00000000000000E+0      0.00000000000000E+0
0.00000000000000E+0      0.00000000000000E+0      1.00000000000000E+0
    0.00000000000000E+0      0.00000000000000E+0      0.00000000000000E+0
   BmNSMass                4     334        1      3.00000000000000E+2
3.00000000000000E+2      0.00000000000000E+0      0.00000000000000E+0
0.00000000000000E+0      0.00000000000000E+0      1.00000000000000E+0
    0.00000000000000E+0      0.00000000000000E+0      0.00000000000000E+0
   BmNSMass                4     335        1      3.00000000000000E+2
3.00000000000000E+2      0.00000000000000E+0      0.00000000000000E+0
0.00000000000000E+0      0.00000000000000E+0      1.00000000000000E+0
    0.00000000000000E+0      0.00000000000000E+0      0.00000000000000E+0
   BmNSMass                4     336        1      3.00000000000000E+2
3.00000000000000E+2      0.00000000000000E+0      0.00000000000000E+0
0.00000000000000E+0      0.00000000000000E+0      1.00000000000000E+0
    0.00000000000000E+0      0.00000000000000E+0      0.00000000000000E+0
   BmNSMass                4     337        1      3.00000000000000E+2
3.00000000000000E+2      0.00000000000000E+0      0.00000000000000E+0
0.00000000000000E+0      0.00000000000000E+0      1.00000000000000E+0
    0.00000000000000E+0      0.00000000000000E+0      0.00000000000000E+0
   BmNSMass                4     338        1      3.00000000000000E+2
3.00000000000000E+2      0.00000000000000E+0      0.00000000000000E+0
0.00000000000000E+0      0.00000000000000E+0      1.00000000000000E+0
```

```
    0.00000000000000E+0      0.00000000000000E+0      0.00000000000000E+0
   BmNSMass                 4     339       1     3.00000000000000E+2
3.00000000000000E+2      0.00000000000000E+0      0.00000000000000E+0
0.00000000000000E+0      0.00000000000000E+0      1.00000000000000E+0
    0.00000000000000E+0      0.00000000000000E+0      0.00000000000000E+0
   BmNSMass                 4     340       1     3.00000000000000E+2
3.00000000000000E+2      0.00000000000000E+0      0.00000000000000E+0
0.00000000000000E+0      0.00000000000000E+0      1.00000000000000E+0
    0.00000000000000E+0      0.00000000000000E+0      0.00000000000000E+0
   BmNSMass                 4     341       1     3.00000000000000E+2
3.00000000000000E+2      0.00000000000000E+0      0.00000000000000E+0
0.00000000000000E+0      0.00000000000000E+0      1.00000000000000E+0
    0.00000000000000E+0      0.00000000000000E+0      0.00000000000000E+0
   BmNSMass                 4     342       1     3.00000000000000E+2
3.00000000000000E+2      0.00000000000000E+0      0.00000000000000E+0
0.00000000000000E+0      0.00000000000000E+0      1.00000000000000E+0
    0.00000000000000E+0      0.00000000000000E+0      0.00000000000000E+0
   BmNSMass                 4     343       1     3.00000000000000E+2
3.00000000000000E+2      0.00000000000000E+0      0.00000000000000E+0
0.00000000000000E+0      0.00000000000000E+0      1.00000000000000E+0
    0.00000000000000E+0      0.00000000000000E+0      0.00000000000000E+0
   BmNSMass                 4     344       1     3.00000000000000E+2
3.00000000000000E+2      0.00000000000000E+0      0.00000000000000E+0
0.00000000000000E+0      0.00000000000000E+0      1.00000000000000E+0
    0.00000000000000E+0      0.00000000000000E+0      0.00000000000000E+0
   BmNSMass                 4     345       1     3.00000000000000E+2
3.00000000000000E+2      0.00000000000000E+0      0.00000000000000E+0
0.00000000000000E+0      0.00000000000000E+0      1.00000000000000E+0
    0.00000000000000E+0      0.00000000000000E+0      0.00000000000000E+0
   BmNSMass                 4     346       1     3.00000000000000E+2
3.00000000000000E+2      0.00000000000000E+0      0.00000000000000E+0
0.00000000000000E+0      0.00000000000000E+0      1.00000000000000E+0
    0.00000000000000E+0      0.00000000000000E+0      0.00000000000000E+0
   BmNSMass                 4     347       1     3.00000000000000E+2
3.00000000000000E+2      0.00000000000000E+0      0.00000000000000E+0
0.00000000000000E+0      0.00000000000000E+0      1.00000000000000E+0
    0.00000000000000E+0      0.00000000000000E+0      0.00000000000000E+0
   BmNSMass                 4     348       1     3.00000000000000E+2
3.00000000000000E+2      0.00000000000000E+0      0.00000000000000E+0
0.00000000000000E+0      0.00000000000000E+0      1.00000000000000E+0
    0.00000000000000E+0      0.00000000000000E+0      0.00000000000000E+0
   BmNSMass                 4     349       1     3.00000000000000E+2
3.00000000000000E+2      0.00000000000000E+0      0.00000000000000E+0
0.00000000000000E+0      0.00000000000000E+0      1.00000000000000E+0
    0.00000000000000E+0      0.00000000000000E+0      0.00000000000000E+0
   BmNSMass                 4     350       1     3.00000000000000E+2
3.00000000000000E+2      0.00000000000000E+0      0.00000000000000E+0
0.00000000000000E+0      0.00000000000000E+0      1.00000000000000E+0
    0.00000000000000E+0      0.00000000000000E+0      0.00000000000000E+0
   BmNSMass                 4     351       1     3.00000000000000E+2
3.00000000000000E+2      0.00000000000000E+0      0.00000000000000E+0
0.00000000000000E+0      0.00000000000000E+0      1.00000000000000E+0
    0.00000000000000E+0      0.00000000000000E+0      0.00000000000000E+0
   BmNSMass                 4     352       1     3.00000000000000E+2
```

```
3.00000000000000E+2      0.00000000000000E+0      0.00000000000000E+0
0.00000000000000E+0      0.00000000000000E+0      1.00000000000000E+0
    0.00000000000000E+0      0.00000000000000E+0      0.00000000000000E+0
   BmNSMass                4      353        1      3.00000000000000E+2
3.00000000000000E+2      0.00000000000000E+0      0.00000000000000E+0
0.00000000000000E+0      0.00000000000000E+0      1.00000000000000E+0
    0.00000000000000E+0      0.00000000000000E+0      0.00000000000000E+0
   BmNSMass                4      354        1      3.00000000000000E+2
3.00000000000000E+2      0.00000000000000E+0      0.00000000000000E+0
0.00000000000000E+0      0.00000000000000E+0      1.00000000000000E+0
    0.00000000000000E+0      0.00000000000000E+0      0.00000000000000E+0
   BmNSMass                4      355        1      3.00000000000000E+2
3.00000000000000E+2      0.00000000000000E+0      0.00000000000000E+0
0.00000000000000E+0      0.00000000000000E+0      1.00000000000000E+0
    0.00000000000000E+0      0.00000000000000E+0      0.00000000000000E+0
   BmNSMass                4      356        1      3.00000000000000E+2
3.00000000000000E+2      0.00000000000000E+0      0.00000000000000E+0
0.00000000000000E+0      0.00000000000000E+0      1.00000000000000E+0
    0.00000000000000E+0      0.00000000000000E+0      0.00000000000000E+0
   BmNSMass                4      357        1      3.00000000000000E+2
3.00000000000000E+2      0.00000000000000E+0      0.00000000000000E+0
0.00000000000000E+0      0.00000000000000E+0      1.00000000000000E+0
    0.00000000000000E+0      0.00000000000000E+0      0.00000000000000E+0
   BmNSMass                4      358        1      3.00000000000000E+2
3.00000000000000E+2      0.00000000000000E+0      0.00000000000000E+0
0.00000000000000E+0      0.00000000000000E+0      1.00000000000000E+0
    0.00000000000000E+0      0.00000000000000E+0      0.00000000000000E+0
   BmNSMass                4      359        1      3.00000000000000E+2
3.00000000000000E+2      0.00000000000000E+0      0.00000000000000E+0
0.00000000000000E+0      0.00000000000000E+0      1.00000000000000E+0
    0.00000000000000E+0      0.00000000000000E+0      0.00000000000000E+0
   BmNSMass                4      360        1      3.00000000000000E+2
3.00000000000000E+2      0.00000000000000E+0      0.00000000000000E+0
0.00000000000000E+0      0.00000000000000E+0      1.00000000000000E+0
    0.00000000000000E+0      0.00000000000000E+0      0.00000000000000E+0
   BmNSMass                4      361        1      3.00000000000000E+2
3.00000000000000E+2      0.00000000000000E+0      0.00000000000000E+0
0.00000000000000E+0      0.00000000000000E+0      1.00000000000000E+0
    0.00000000000000E+0      0.00000000000000E+0      0.00000000000000E+0
   BmNSMass                4      362        1      3.00000000000000E+2
3.00000000000000E+2      0.00000000000000E+0      0.00000000000000E+0
0.00000000000000E+0      0.00000000000000E+0      1.00000000000000E+0
    0.00000000000000E+0      0.00000000000000E+0      0.00000000000000E+0
   BmNSMass                4      363        1      3.00000000000000E+2
3.00000000000000E+2      0.00000000000000E+0      0.00000000000000E+0
0.00000000000000E+0      0.00000000000000E+0      1.00000000000000E+0
    0.00000000000000E+0      0.00000000000000E+0      0.00000000000000E+0
   BmNSMass                4      364        1      3.00000000000000E+2
3.00000000000000E+2      0.00000000000000E+0      0.00000000000000E+0
0.00000000000000E+0      0.00000000000000E+0      1.00000000000000E+0
    0.00000000000000E+0      0.00000000000000E+0      0.00000000000000E+0
   BmNSMass                4      365        1      3.00000000000000E+2
3.00000000000000E+2      0.00000000000000E+0      0.00000000000000E+0
0.00000000000000E+0      0.00000000000000E+0      1.00000000000000E+0
```

```
    0.00000000000000E+0      0.00000000000000E+0      0.00000000000000E+0
   BmNSMass                 4     366         1     3.00000000000000E+2
3.00000000000000E+2      0.00000000000000E+0      0.00000000000000E+0
0.00000000000000E+0      0.00000000000000E+0      1.00000000000000E+0
    0.00000000000000E+0      0.00000000000000E+0      0.00000000000000E+0
   BmNSMass                 4     367         1     3.00000000000000E+2
3.00000000000000E+2      0.00000000000000E+0      0.00000000000000E+0
0.00000000000000E+0      0.00000000000000E+0      1.00000000000000E+0
    0.00000000000000E+0      0.00000000000000E+0      0.00000000000000E+0
   BmNSMass                 4     368         1     3.00000000000000E+2
3.00000000000000E+2      0.00000000000000E+0      0.00000000000000E+0
0.00000000000000E+0      0.00000000000000E+0      1.00000000000000E+0
    0.00000000000000E+0      0.00000000000000E+0      0.00000000000000E+0
   BmNSMass                 4     369         1     3.00000000000000E+2
3.00000000000000E+2      0.00000000000000E+0      0.00000000000000E+0
0.00000000000000E+0      0.00000000000000E+0      1.00000000000000E+0
    0.00000000000000E+0      0.00000000000000E+0      0.00000000000000E+0
   BmNSMass                 4     370         1     3.00000000000000E+2
3.00000000000000E+2      0.00000000000000E+0      0.00000000000000E+0
0.00000000000000E+0      0.00000000000000E+0      1.00000000000000E+0
    0.00000000000000E+0      0.00000000000000E+0      0.00000000000000E+0
   BmNSMass                 4     371         1     3.00000000000000E+2
3.00000000000000E+2      0.00000000000000E+0      0.00000000000000E+0
0.00000000000000E+0      0.00000000000000E+0      1.00000000000000E+0
    0.00000000000000E+0      0.00000000000000E+0      0.00000000000000E+0
   BmNSMass                 4     372         1     3.00000000000000E+2
3.00000000000000E+2      0.00000000000000E+0      0.00000000000000E+0
0.00000000000000E+0      0.00000000000000E+0      1.00000000000000E+0
    0.00000000000000E+0      0.00000000000000E+0      0.00000000000000E+0
   BmNSMass                 4     373         1     3.00000000000000E+2
3.00000000000000E+2      0.00000000000000E+0      0.00000000000000E+0
0.00000000000000E+0      0.00000000000000E+0      1.00000000000000E+0
    0.00000000000000E+0      0.00000000000000E+0      0.00000000000000E+0
   BmNSMass                 4     374         1     3.00000000000000E+2
3.00000000000000E+2      0.00000000000000E+0      0.00000000000000E+0
0.00000000000000E+0      0.00000000000000E+0      1.00000000000000E+0
    0.00000000000000E+0      0.00000000000000E+0      0.00000000000000E+0
   BmNSMass                 4     375         1     3.00000000000000E+2
3.00000000000000E+2      0.00000000000000E+0      0.00000000000000E+0
0.00000000000000E+0      0.00000000000000E+0      1.00000000000000E+0
    0.00000000000000E+0      0.00000000000000E+0      0.00000000000000E+0
   BmNSMass                 4     376         1     3.00000000000000E+2
3.00000000000000E+2      0.00000000000000E+0      0.00000000000000E+0
0.00000000000000E+0      0.00000000000000E+0      1.00000000000000E+0
    0.00000000000000E+0      0.00000000000000E+0      0.00000000000000E+0
   BmNSMass                 4     377         1     3.00000000000000E+2
3.00000000000000E+2      0.00000000000000E+0      0.00000000000000E+0
0.00000000000000E+0      0.00000000000000E+0      1.00000000000000E+0
    0.00000000000000E+0      0.00000000000000E+0      0.00000000000000E+0
   BmNSMass                 4     378         1     3.00000000000000E+2
3.00000000000000E+2      0.00000000000000E+0      0.00000000000000E+0
0.00000000000000E+0      0.00000000000000E+0      1.00000000000000E+0
    0.00000000000000E+0      0.00000000000000E+0      0.00000000000000E+0
   BmNSMass                 4     379         1     3.00000000000000E+2
```

```
3.00000000000000E+2      0.00000000000000E+0      0.00000000000000E+0
0.00000000000000E+0      0.00000000000000E+0      1.00000000000000E+0
    0.00000000000000E+0      0.00000000000000E+0      0.00000000000000E+0
   BmNSMass                 4     380       1     3.00000000000000E+2
3.00000000000000E+2      0.00000000000000E+0      0.00000000000000E+0
0.00000000000000E+0      0.00000000000000E+0      1.00000000000000E+0
    0.00000000000000E+0      0.00000000000000E+0      0.00000000000000E+0
   BmNSMass                 4     381       1     3.00000000000000E+2
3.00000000000000E+2      0.00000000000000E+0      0.00000000000000E+0
0.00000000000000E+0      0.00000000000000E+0      1.00000000000000E+0
    0.00000000000000E+0      0.00000000000000E+0      0.00000000000000E+0
   BmNSMass                 4     382       1     3.00000000000000E+2
3.00000000000000E+2      0.00000000000000E+0      0.00000000000000E+0
0.00000000000000E+0      0.00000000000000E+0      1.00000000000000E+0
    0.00000000000000E+0      0.00000000000000E+0      0.00000000000000E+0
   BmNSMass                 4     383       1     3.00000000000000E+2
3.00000000000000E+2      0.00000000000000E+0      0.00000000000000E+0
0.00000000000000E+0      0.00000000000000E+0      1.00000000000000E+0
    0.00000000000000E+0      0.00000000000000E+0      0.00000000000000E+0
   BmNSMass                 4     384       1     3.00000000000000E+2
3.00000000000000E+2      0.00000000000000E+0      0.00000000000000E+0
0.00000000000000E+0      0.00000000000000E+0      1.00000000000000E+0
    0.00000000000000E+0      0.00000000000000E+0      0.00000000000000E+0
   BmNSMass                 4     385       1     3.00000000000000E+2
3.00000000000000E+2      0.00000000000000E+0      0.00000000000000E+0
0.00000000000000E+0      0.00000000000000E+0      1.00000000000000E+0
    0.00000000000000E+0      0.00000000000000E+0      0.00000000000000E+0
   BmNSMass                 4     386       1     3.00000000000000E+2
3.00000000000000E+2      0.00000000000000E+0      0.00000000000000E+0
0.00000000000000E+0      0.00000000000000E+0      1.00000000000000E+0
    0.00000000000000E+0      0.00000000000000E+0      0.00000000000000E+0
   BmNSMass                 4     387       1     3.00000000000000E+2
3.00000000000000E+2      0.00000000000000E+0      0.00000000000000E+0
0.00000000000000E+0      0.00000000000000E+0      1.00000000000000E+0
    0.00000000000000E+0      0.00000000000000E+0      0.00000000000000E+0
   BmNSMass                 4     388       1     3.00000000000000E+2
3.00000000000000E+2      0.00000000000000E+0      0.00000000000000E+0
0.00000000000000E+0      0.00000000000000E+0      1.00000000000000E+0
    0.00000000000000E+0      0.00000000000000E+0      0.00000000000000E+0
   BmNSMass                 4     389       1     3.00000000000000E+2
3.00000000000000E+2      0.00000000000000E+0      0.00000000000000E+0
0.00000000000000E+0      0.00000000000000E+0      1.00000000000000E+0
    0.00000000000000E+0      0.00000000000000E+0      0.00000000000000E+0
   BmNSMass                 4     390       1     3.00000000000000E+2
3.00000000000000E+2      0.00000000000000E+0      0.00000000000000E+0
0.00000000000000E+0      0.00000000000000E+0      1.00000000000000E+0
    0.00000000000000E+0      0.00000000000000E+0      0.00000000000000E+0
   BmNSMass                 4     391       1     3.00000000000000E+2
3.00000000000000E+2      0.00000000000000E+0      0.00000000000000E+0
0.00000000000000E+0      0.00000000000000E+0      1.00000000000000E+0
    0.00000000000000E+0      0.00000000000000E+0      0.00000000000000E+0
   BmNSMass                 4     392       1     3.00000000000000E+2
3.00000000000000E+2      0.00000000000000E+0      0.00000000000000E+0
0.00000000000000E+0      0.00000000000000E+0      1.00000000000000E+0
```

```
     0.00000000000000E+0      0.00000000000000E+0      0.00000000000000E+0
    BmNSMass                 4     393       1     3.00000000000000E+2
3.00000000000000E+2      0.00000000000000E+0      0.00000000000000E+0
0.00000000000000E+0      0.00000000000000E+0      1.00000000000000E+0
     0.00000000000000E+0      0.00000000000000E+0      0.00000000000000E+0
    BmNSMass                 4     394       1     3.00000000000000E+2
3.00000000000000E+2      0.00000000000000E+0      0.00000000000000E+0
0.00000000000000E+0      0.00000000000000E+0      1.00000000000000E+0
     0.00000000000000E+0      0.00000000000000E+0      0.00000000000000E+0
    BmNSMass                 4     395       1     3.00000000000000E+2
3.00000000000000E+2      0.00000000000000E+0      0.00000000000000E+0
0.00000000000000E+0      0.00000000000000E+0      1.00000000000000E+0
     0.00000000000000E+0      0.00000000000000E+0      0.00000000000000E+0
    BmNSMass                 4     396       1     3.00000000000000E+2
3.00000000000000E+2      0.00000000000000E+0      0.00000000000000E+0
0.00000000000000E+0      0.00000000000000E+0      1.00000000000000E+0
     0.00000000000000E+0      0.00000000000000E+0      0.00000000000000E+0
    BmNSMass                 4     397       1     3.00000000000000E+2
3.00000000000000E+2      0.00000000000000E+0      0.00000000000000E+0
0.00000000000000E+0      0.00000000000000E+0      1.00000000000000E+0
     0.00000000000000E+0      0.00000000000000E+0      0.00000000000000E+0
    BmNSMass                 4     398       1     3.00000000000000E+2
3.00000000000000E+2      0.00000000000000E+0      0.00000000000000E+0
0.00000000000000E+0      0.00000000000000E+0      1.00000000000000E+0
     0.00000000000000E+0      0.00000000000000E+0      0.00000000000000E+0
    BmNSMass                 4     399       1     3.00000000000000E+2
3.00000000000000E+2      0.00000000000000E+0      0.00000000000000E+0
0.00000000000000E+0      0.00000000000000E+0      1.00000000000000E+0
     0.00000000000000E+0      0.00000000000000E+0      0.00000000000000E+0
    BmNSMass                 4     400       1     3.00000000000000E+2
3.00000000000000E+2      0.00000000000000E+0      0.00000000000000E+0
0.00000000000000E+0      0.00000000000000E+0      1.00000000000000E+0
     0.00000000000000E+0      0.00000000000000E+0      0.00000000000000E+0
    BmNSMass                 4     401       1     3.00000000000000E+2
3.00000000000000E+2      0.00000000000000E+0      0.00000000000000E+0
0.00000000000000E+0      0.00000000000000E+0      1.00000000000000E+0
     0.00000000000000E+0      0.00000000000000E+0      0.00000000000000E+0
    BmNSMass                 4     402       1     3.00000000000000E+2
3.00000000000000E+2      0.00000000000000E+0      0.00000000000000E+0
0.00000000000000E+0      0.00000000000000E+0      1.00000000000000E+0
     0.00000000000000E+0      0.00000000000000E+0      0.00000000000000E+0
    BmNSMass                 4     403       1     3.00000000000000E+2
3.00000000000000E+2      0.00000000000000E+0      0.00000000000000E+0
0.00000000000000E+0      0.00000000000000E+0      1.00000000000000E+0
     0.00000000000000E+0      0.00000000000000E+0      0.00000000000000E+0
    BmNSMass                 4     404       1     3.00000000000000E+2
3.00000000000000E+2      0.00000000000000E+0      0.00000000000000E+0
0.00000000000000E+0      0.00000000000000E+0      1.00000000000000E+0
     0.00000000000000E+0      0.00000000000000E+0      0.00000000000000E+0
    BmNSMass                 4     405       1     3.00000000000000E+2
3.00000000000000E+2      0.00000000000000E+0      0.00000000000000E+0
0.00000000000000E+0      0.00000000000000E+0      1.00000000000000E+0
     0.00000000000000E+0      0.00000000000000E+0      0.00000000000000E+0
    BmNSMass                 4     406       1     3.00000000000000E+2
```

```
3.00000000000000E+2      0.00000000000000E+0      0.00000000000000E+0
0.00000000000000E+0      0.00000000000000E+0      1.00000000000000E+0
    0.00000000000000E+0      0.00000000000000E+0      0.00000000000000E+0
   BmNSMass                 4     407        1     3.00000000000000E+2
3.00000000000000E+2      0.00000000000000E+0      0.00000000000000E+0
0.00000000000000E+0      0.00000000000000E+0      1.00000000000000E+0
    0.00000000000000E+0      0.00000000000000E+0      0.00000000000000E+0
   BmNSMass                 4     408        1     3.00000000000000E+2
3.00000000000000E+2      0.00000000000000E+0      0.00000000000000E+0
0.00000000000000E+0      0.00000000000000E+0      1.00000000000000E+0
    0.00000000000000E+0      0.00000000000000E+0      0.00000000000000E+0
   BmNSMass                 4     409        1     3.00000000000000E+2
3.00000000000000E+2      0.00000000000000E+0      0.00000000000000E+0
0.00000000000000E+0      0.00000000000000E+0      1.00000000000000E+0
    0.00000000000000E+0      0.00000000000000E+0      0.00000000000000E+0
   BmNSMass                 4     410        1     3.00000000000000E+2
3.00000000000000E+2      0.00000000000000E+0      0.00000000000000E+0
0.00000000000000E+0      0.00000000000000E+0      1.00000000000000E+0
    0.00000000000000E+0      0.00000000000000E+0      0.00000000000000E+0
   BmNSMass                 4     411        1     3.00000000000000E+2
3.00000000000000E+2      0.00000000000000E+0      0.00000000000000E+0
0.00000000000000E+0      0.00000000000000E+0      1.00000000000000E+0
    0.00000000000000E+0      0.00000000000000E+0      0.00000000000000E+0
   BmNSMass                 4     412        1     3.00000000000000E+2
3.00000000000000E+2      0.00000000000000E+0      0.00000000000000E+0
0.00000000000000E+0      0.00000000000000E+0      1.00000000000000E+0
    0.00000000000000E+0      0.00000000000000E+0      0.00000000000000E+0
   BmNSMass                 4     413        1     3.00000000000000E+2
3.00000000000000E+2      0.00000000000000E+0      0.00000000000000E+0
0.00000000000000E+0      0.00000000000000E+0      1.00000000000000E+0
    0.00000000000000E+0      0.00000000000000E+0      0.00000000000000E+0
   BmNSMass                 4     414        1     3.00000000000000E+2
3.00000000000000E+2      0.00000000000000E+0      0.00000000000000E+0
0.00000000000000E+0      0.00000000000000E+0      1.00000000000000E+0
    0.00000000000000E+0      0.00000000000000E+0      0.00000000000000E+0
   BmNSMass                 4     415        1     3.00000000000000E+2
3.00000000000000E+2      0.00000000000000E+0      0.00000000000000E+0
0.00000000000000E+0      0.00000000000000E+0      1.00000000000000E+0
    0.00000000000000E+0      0.00000000000000E+0      0.00000000000000E+0
   BmNSMass                 4     416        1     3.00000000000000E+2
3.00000000000000E+2      0.00000000000000E+0      0.00000000000000E+0
0.00000000000000E+0      0.00000000000000E+0      1.00000000000000E+0
    0.00000000000000E+0      0.00000000000000E+0      0.00000000000000E+0
   BmNSMass                 4     417        1     3.00000000000000E+2
3.00000000000000E+2      0.00000000000000E+0      0.00000000000000E+0
0.00000000000000E+0      0.00000000000000E+0      1.00000000000000E+0
    0.00000000000000E+0      0.00000000000000E+0      0.00000000000000E+0
   BmNSMass                 4     418        1     3.00000000000000E+2
3.00000000000000E+2      0.00000000000000E+0      0.00000000000000E+0
0.00000000000000E+0      0.00000000000000E+0      1.00000000000000E+0
    0.00000000000000E+0      0.00000000000000E+0      0.00000000000000E+0
   BmNSMass                 4     419        1     3.00000000000000E+2
3.00000000000000E+2      0.00000000000000E+0      0.00000000000000E+0
0.00000000000000E+0      0.00000000000000E+0      1.00000000000000E+0
```

```
    0.00000000000000E+0      0.00000000000000E+0      0.00000000000000E+0
   BmNSMass                 4     420       1     3.00000000000000E+2
3.00000000000000E+2      0.00000000000000E+0      0.00000000000000E+0
0.00000000000000E+0      0.00000000000000E+0      1.00000000000000E+0
    0.00000000000000E+0      0.00000000000000E+0      0.00000000000000E+0
   BmNSMass                 4     421       1     3.00000000000000E+2
3.00000000000000E+2      0.00000000000000E+0      0.00000000000000E+0
0.00000000000000E+0      0.00000000000000E+0      1.00000000000000E+0
    0.00000000000000E+0      0.00000000000000E+0      0.00000000000000E+0
   BmNSMass                 4     422       1     3.00000000000000E+2
3.00000000000000E+2      0.00000000000000E+0      0.00000000000000E+0
0.00000000000000E+0      0.00000000000000E+0      1.00000000000000E+0
    0.00000000000000E+0      0.00000000000000E+0      0.00000000000000E+0
   BmNSMass                 4     423       1     3.00000000000000E+2
3.00000000000000E+2      0.00000000000000E+0      0.00000000000000E+0
0.00000000000000E+0      0.00000000000000E+0      1.00000000000000E+0
    0.00000000000000E+0      0.00000000000000E+0      0.00000000000000E+0
   BmNSMass                 4     424       1     3.00000000000000E+2
3.00000000000000E+2      0.00000000000000E+0      0.00000000000000E+0
0.00000000000000E+0      0.00000000000000E+0      1.00000000000000E+0
    0.00000000000000E+0      0.00000000000000E+0      0.00000000000000E+0
   BmNSMass                 4     425       1     3.00000000000000E+2
3.00000000000000E+2      0.00000000000000E+0      0.00000000000000E+0
0.00000000000000E+0      0.00000000000000E+0      1.00000000000000E+0
    0.00000000000000E+0      0.00000000000000E+0      0.00000000000000E+0
   BmNSMass                 4     426       1     3.00000000000000E+2
3.00000000000000E+2      0.00000000000000E+0      0.00000000000000E+0
0.00000000000000E+0      0.00000000000000E+0      1.00000000000000E+0
    0.00000000000000E+0      0.00000000000000E+0      0.00000000000000E+0
   BmNSMass                 4     427       1     3.00000000000000E+2
3.00000000000000E+2      0.00000000000000E+0      0.00000000000000E+0
0.00000000000000E+0      0.00000000000000E+0      1.00000000000000E+0
    0.00000000000000E+0      0.00000000000000E+0      0.00000000000000E+0
   BmNSMass                 4     428       1     3.00000000000000E+2
3.00000000000000E+2      0.00000000000000E+0      0.00000000000000E+0
0.00000000000000E+0      0.00000000000000E+0      1.00000000000000E+0
    0.00000000000000E+0      0.00000000000000E+0      0.00000000000000E+0
   BmNSMass                 4     429       1     3.00000000000000E+2
3.00000000000000E+2      0.00000000000000E+0      0.00000000000000E+0
0.00000000000000E+0      0.00000000000000E+0      1.00000000000000E+0
    0.00000000000000E+0      0.00000000000000E+0      0.00000000000000E+0
   BmNSMass                 4     430       1     3.00000000000000E+2
3.00000000000000E+2      0.00000000000000E+0      0.00000000000000E+0
0.00000000000000E+0      0.00000000000000E+0      1.00000000000000E+0
    0.00000000000000E+0      0.00000000000000E+0      0.00000000000000E+0
   BmNSMass                 4     431       1     3.00000000000000E+2
3.00000000000000E+2      0.00000000000000E+0      0.00000000000000E+0
0.00000000000000E+0      0.00000000000000E+0      1.00000000000000E+0
    0.00000000000000E+0      0.00000000000000E+0      0.00000000000000E+0
   BmNSMass                 4     432       1     3.00000000000000E+2
3.00000000000000E+2      0.00000000000000E+0      0.00000000000000E+0
0.00000000000000E+0      0.00000000000000E+0      1.00000000000000E+0
    0.00000000000000E+0      0.00000000000000E+0      0.00000000000000E+0
   BmNSMass                 4     433       1     3.00000000000000E+2
```

```
3.00000000000000E+2      0.00000000000000E+0      0.00000000000000E+0
0.00000000000000E+0      0.00000000000000E+0      1.00000000000000E+0
    0.00000000000000E+0      0.00000000000000E+0      0.00000000000000E+0
   BmNSMass                 4     503         1     7.00000000000000E+2
7.00000000000000E+2      0.00000000000000E+0      0.00000000000000E+0
0.00000000000000E+0      0.00000000000000E+0      1.00000000000000E+0
    0.00000000000000E+0      0.00000000000000E+0      0.00000000000000E+0
   BmNSMass                 4     504         1     7.00000000000000E+2
7.00000000000000E+2      0.00000000000000E+0      0.00000000000000E+0
0.00000000000000E+0      0.00000000000000E+0      1.00000000000000E+0
    0.00000000000000E+0      0.00000000000000E+0      0.00000000000000E+0
   BmNSMass                 4     505         1     7.00000000000000E+2
7.00000000000000E+2      0.00000000000000E+0      0.00000000000000E+0
0.00000000000000E+0      0.00000000000000E+0      1.00000000000000E+0
    0.00000000000000E+0      0.00000000000000E+0      0.00000000000000E+0
   BmNSMass                 4     506         1     7.00000000000000E+2
7.00000000000000E+2      0.00000000000000E+0      0.00000000000000E+0
0.00000000000000E+0      0.00000000000000E+0      1.00000000000000E+0
    0.00000000000000E+0      0.00000000000000E+0      0.00000000000000E+0
   BmNSMass                 4     507         1     7.00000000000000E+2
7.00000000000000E+2      0.00000000000000E+0      0.00000000000000E+0
0.00000000000000E+0      0.00000000000000E+0      1.00000000000000E+0
    0.00000000000000E+0      0.00000000000000E+0      0.00000000000000E+0
   BmNSMass                 4     508         1     7.00000000000000E+2
7.00000000000000E+2      0.00000000000000E+0      0.00000000000000E+0
0.00000000000000E+0      0.00000000000000E+0      1.00000000000000E+0
    0.00000000000000E+0      0.00000000000000E+0      0.00000000000000E+0
   BmNSMass                 4     509         1     7.00000000000000E+2
7.00000000000000E+2      0.00000000000000E+0      0.00000000000000E+0
0.00000000000000E+0      0.00000000000000E+0      1.00000000000000E+0
    0.00000000000000E+0      0.00000000000000E+0      0.00000000000000E+0
   BmNSMass                 4     510         1     7.00000000000000E+2
7.00000000000000E+2      0.00000000000000E+0      0.00000000000000E+0
0.00000000000000E+0      0.00000000000000E+0      1.00000000000000E+0
    0.00000000000000E+0      0.00000000000000E+0      0.00000000000000E+0
   BmNSMass                 4     511         1     7.00000000000000E+2
7.00000000000000E+2      0.00000000000000E+0      0.00000000000000E+0
0.00000000000000E+0      0.00000000000000E+0      1.00000000000000E+0
    0.00000000000000E+0      0.00000000000000E+0      0.00000000000000E+0
   BmNSMass                 4     512         1     7.00000000000000E+2
7.00000000000000E+2      0.00000000000000E+0      0.00000000000000E+0
0.00000000000000E+0      0.00000000000000E+0      1.00000000000000E+0
    0.00000000000000E+0      0.00000000000000E+0      0.00000000000000E+0
   BmNSMass                 4     513         1     7.00000000000000E+2
7.00000000000000E+2      0.00000000000000E+0      0.00000000000000E+0
0.00000000000000E+0      0.00000000000000E+0      1.00000000000000E+0
    0.00000000000000E+0      0.00000000000000E+0      0.00000000000000E+0
   BmNSMass                 4     514         1     7.00000000000000E+2
7.00000000000000E+2      0.00000000000000E+0      0.00000000000000E+0
0.00000000000000E+0      0.00000000000000E+0      1.00000000000000E+0
    0.00000000000000E+0      0.00000000000000E+0      0.00000000000000E+0
   BmNSMass                 4     515         1     7.00000000000000E+2
7.00000000000000E+2      0.00000000000000E+0      0.00000000000000E+0
0.00000000000000E+0      0.00000000000000E+0      1.00000000000000E+0
```

```
    0.00000000000000E+0      0.00000000000000E+0      0.00000000000000E+0
   BmNSMass                 4     516       1     7.00000000000000E+2
7.00000000000000E+2      0.00000000000000E+0      0.00000000000000E+0
0.00000000000000E+0      0.00000000000000E+0      1.00000000000000E+0
    0.00000000000000E+0      0.00000000000000E+0      0.00000000000000E+0
   BmNSMass                 4     517       1     7.00000000000000E+2
7.00000000000000E+2      0.00000000000000E+0      0.00000000000000E+0
0.00000000000000E+0      0.00000000000000E+0      1.00000000000000E+0
    0.00000000000000E+0      0.00000000000000E+0      0.00000000000000E+0
   BmNSMass                 4     518       1     7.00000000000000E+2
7.00000000000000E+2      0.00000000000000E+0      0.00000000000000E+0
0.00000000000000E+0      0.00000000000000E+0      1.00000000000000E+0
    0.00000000000000E+0      0.00000000000000E+0      0.00000000000000E+0
   BmNSMass                 4     519       1     7.00000000000000E+2
7.00000000000000E+2      0.00000000000000E+0      0.00000000000000E+0
0.00000000000000E+0      0.00000000000000E+0      1.00000000000000E+0
    0.00000000000000E+0      0.00000000000000E+0      0.00000000000000E+0
   BmNSMass                 4     520       1     7.00000000000000E+2
7.00000000000000E+2      0.00000000000000E+0      0.00000000000000E+0
0.00000000000000E+0      0.00000000000000E+0      1.00000000000000E+0
    0.00000000000000E+0      0.00000000000000E+0      0.00000000000000E+0
   BmNSMass                 4     521       1     7.00000000000000E+2
7.00000000000000E+2      0.00000000000000E+0      0.00000000000000E+0
0.00000000000000E+0      0.00000000000000E+0      1.00000000000000E+0
    0.00000000000000E+0      0.00000000000000E+0      0.00000000000000E+0
   BmNSMass                 4     522       1     7.00000000000000E+2
7.00000000000000E+2      0.00000000000000E+0      0.00000000000000E+0
0.00000000000000E+0      0.00000000000000E+0      1.00000000000000E+0
    0.00000000000000E+0      0.00000000000000E+0      0.00000000000000E+0
   BmNSMass                 4     523       1     7.00000000000000E+2
7.00000000000000E+2      0.00000000000000E+0      0.00000000000000E+0
0.00000000000000E+0      0.00000000000000E+0      1.00000000000000E+0
    0.00000000000000E+0      0.00000000000000E+0      0.00000000000000E+0
   BmNSMass                 4     524       1     7.00000000000000E+2
7.00000000000000E+2      0.00000000000000E+0      0.00000000000000E+0
0.00000000000000E+0      0.00000000000000E+0      1.00000000000000E+0
    0.00000000000000E+0      0.00000000000000E+0      0.00000000000000E+0
   BmNSMass                 4     525       1     7.00000000000000E+2
7.00000000000000E+2      0.00000000000000E+0      0.00000000000000E+0
0.00000000000000E+0      0.00000000000000E+0      1.00000000000000E+0
    0.00000000000000E+0      0.00000000000000E+0      0.00000000000000E+0
   BmNSMass                 4     526       1     7.00000000000000E+2
7.00000000000000E+2      0.00000000000000E+0      0.00000000000000E+0
0.00000000000000E+0      0.00000000000000E+0      1.00000000000000E+0
    0.00000000000000E+0      0.00000000000000E+0      0.00000000000000E+0
   BmNSMass                 4     527       1     7.00000000000000E+2
7.00000000000000E+2      0.00000000000000E+0      0.00000000000000E+0
0.00000000000000E+0      0.00000000000000E+0      1.00000000000000E+0
    0.00000000000000E+0      0.00000000000000E+0      0.00000000000000E+0
   BmNSMass                 4     528       1     7.00000000000000E+2
7.00000000000000E+2      0.00000000000000E+0      0.00000000000000E+0
0.00000000000000E+0      0.00000000000000E+0      1.00000000000000E+0
    0.00000000000000E+0      0.00000000000000E+0      0.00000000000000E+0
   BmNSMass                 4     529       1     7.00000000000000E+2
```

```
7.00000000000000E+2      0.00000000000000E+0      0.00000000000000E+0
0.00000000000000E+0      0.00000000000000E+0      1.00000000000000E+0
    0.00000000000000E+0      0.00000000000000E+0      0.00000000000000E+0
   BmNSMass                 4     530         1     7.00000000000000E+2
7.00000000000000E+2      0.00000000000000E+0      0.00000000000000E+0
0.00000000000000E+0      0.00000000000000E+0      1.00000000000000E+0
    0.00000000000000E+0      0.00000000000000E+0      0.00000000000000E+0
   BmNSMass                 4     531         1     7.00000000000000E+2
7.00000000000000E+2      0.00000000000000E+0      0.00000000000000E+0
0.00000000000000E+0      0.00000000000000E+0      1.00000000000000E+0
    0.00000000000000E+0      0.00000000000000E+0      0.00000000000000E+0
   BmNSMass                 4     532         1     7.00000000000000E+2
7.00000000000000E+2      0.00000000000000E+0      0.00000000000000E+0
0.00000000000000E+0      0.00000000000000E+0      1.00000000000000E+0
    0.00000000000000E+0      0.00000000000000E+0      0.00000000000000E+0
   BmNSMass                 4     533         1     7.00000000000000E+2
7.00000000000000E+2      0.00000000000000E+0      0.00000000000000E+0
0.00000000000000E+0      0.00000000000000E+0      1.00000000000000E+0
    0.00000000000000E+0      0.00000000000000E+0      0.00000000000000E+0
   BmNSMass                 4     534         1     7.00000000000000E+2
7.00000000000000E+2      0.00000000000000E+0      0.00000000000000E+0
0.00000000000000E+0      0.00000000000000E+0      1.00000000000000E+0
    0.00000000000000E+0      0.00000000000000E+0      0.00000000000000E+0
   BmNSMass                 4     535         1     7.00000000000000E+2
7.00000000000000E+2      0.00000000000000E+0      0.00000000000000E+0
0.00000000000000E+0      0.00000000000000E+0      1.00000000000000E+0
    0.00000000000000E+0      0.00000000000000E+0      0.00000000000000E+0
   BmNSMass                 4     536         1     7.00000000000000E+2
7.00000000000000E+2      0.00000000000000E+0      0.00000000000000E+0
0.00000000000000E+0      0.00000000000000E+0      1.00000000000000E+0
    0.00000000000000E+0      0.00000000000000E+0      0.00000000000000E+0
   BmNSMass                 4     537         1     7.00000000000000E+2
7.00000000000000E+2      0.00000000000000E+0      0.00000000000000E+0
0.00000000000000E+0      0.00000000000000E+0      1.00000000000000E+0
    0.00000000000000E+0      0.00000000000000E+0      0.00000000000000E+0
   BmNSMass                 4     538         1     7.00000000000000E+2
7.00000000000000E+2      0.00000000000000E+0      0.00000000000000E+0
0.00000000000000E+0      0.00000000000000E+0      1.00000000000000E+0
    0.00000000000000E+0      0.00000000000000E+0      0.00000000000000E+0
   BmNSMass                 4     539         1     7.00000000000000E+2
7.00000000000000E+2      0.00000000000000E+0      0.00000000000000E+0
0.00000000000000E+0      0.00000000000000E+0      1.00000000000000E+0
    0.00000000000000E+0      0.00000000000000E+0      0.00000000000000E+0
   BmNSMass                 4     540         1     7.00000000000000E+2
7.00000000000000E+2      0.00000000000000E+0      0.00000000000000E+0
0.00000000000000E+0      0.00000000000000E+0      1.00000000000000E+0
    0.00000000000000E+0      0.00000000000000E+0      0.00000000000000E+0
   BmNSMass                 4     541         1     7.00000000000000E+2
7.00000000000000E+2      0.00000000000000E+0      0.00000000000000E+0
0.00000000000000E+0      0.00000000000000E+0      1.00000000000000E+0
    0.00000000000000E+0      0.00000000000000E+0      0.00000000000000E+0
   BmNSMass                 4     542         1     7.00000000000000E+2
7.00000000000000E+2      0.00000000000000E+0      0.00000000000000E+0
0.00000000000000E+0      0.00000000000000E+0      1.00000000000000E+0
```

```
    0.00000000000000E+0      0.00000000000000E+0      0.00000000000000E+0
   BmNSMass                 4     543       1     7.00000000000000E+2
7.00000000000000E+2      0.00000000000000E+0      0.00000000000000E+0
0.00000000000000E+0      0.00000000000000E+0      1.00000000000000E+0
    0.00000000000000E+0      0.00000000000000E+0      0.00000000000000E+0
   BmNSMass                 4     544       1     7.00000000000000E+2
7.00000000000000E+2      0.00000000000000E+0      0.00000000000000E+0
0.00000000000000E+0      0.00000000000000E+0      1.00000000000000E+0
    0.00000000000000E+0      0.00000000000000E+0      0.00000000000000E+0
   BmNSMass                 4     545       1     7.00000000000000E+2
7.00000000000000E+2      0.00000000000000E+0      0.00000000000000E+0
0.00000000000000E+0      0.00000000000000E+0      1.00000000000000E+0
    0.00000000000000E+0      0.00000000000000E+0      0.00000000000000E+0
   BmNSMass                 4     546       1     7.00000000000000E+2
7.00000000000000E+2      0.00000000000000E+0      0.00000000000000E+0
0.00000000000000E+0      0.00000000000000E+0      1.00000000000000E+0
    0.00000000000000E+0      0.00000000000000E+0      0.00000000000000E+0
   BmNSMass                 4     547       1     7.00000000000000E+2
7.00000000000000E+2      0.00000000000000E+0      0.00000000000000E+0
0.00000000000000E+0      0.00000000000000E+0      1.00000000000000E+0
    0.00000000000000E+0      0.00000000000000E+0      0.00000000000000E+0
   BmNSMass                 4     548       1     7.00000000000000E+2
7.00000000000000E+2      0.00000000000000E+0      0.00000000000000E+0
0.00000000000000E+0      0.00000000000000E+0      1.00000000000000E+0
    0.00000000000000E+0      0.00000000000000E+0      0.00000000000000E+0
   BmNSMass                 4     549       1     7.00000000000000E+2
7.00000000000000E+2      0.00000000000000E+0      0.00000000000000E+0
0.00000000000000E+0      0.00000000000000E+0      1.00000000000000E+0
    0.00000000000000E+0      0.00000000000000E+0      0.00000000000000E+0
   BmNSMass                 4     550       1     7.00000000000000E+2
7.00000000000000E+2      0.00000000000000E+0      0.00000000000000E+0
0.00000000000000E+0      0.00000000000000E+0      1.00000000000000E+0
    0.00000000000000E+0      0.00000000000000E+0      0.00000000000000E+0
   BmNSMass                 4     551       1     7.00000000000000E+2
7.00000000000000E+2      0.00000000000000E+0      0.00000000000000E+0
0.00000000000000E+0      0.00000000000000E+0      1.00000000000000E+0
    0.00000000000000E+0      0.00000000000000E+0      0.00000000000000E+0
   BmNSMass                 4     552       1     7.00000000000000E+2
7.00000000000000E+2      0.00000000000000E+0      0.00000000000000E+0
0.00000000000000E+0      0.00000000000000E+0      1.00000000000000E+0
    0.00000000000000E+0      0.00000000000000E+0      0.00000000000000E+0
   BmNSMass                 4     553       1     7.00000000000000E+2
7.00000000000000E+2      0.00000000000000E+0      0.00000000000000E+0
0.00000000000000E+0      0.00000000000000E+0      1.00000000000000E+0
    0.00000000000000E+0      0.00000000000000E+0      0.00000000000000E+0
   BmNSMass                 4     554       1     7.00000000000000E+2
7.00000000000000E+2      0.00000000000000E+0      0.00000000000000E+0
0.00000000000000E+0      0.00000000000000E+0      1.00000000000000E+0
    0.00000000000000E+0      0.00000000000000E+0      0.00000000000000E+0
   BmNSMass                 4     555       1     7.00000000000000E+2
7.00000000000000E+2      0.00000000000000E+0      0.00000000000000E+0
0.00000000000000E+0      0.00000000000000E+0      1.00000000000000E+0
    0.00000000000000E+0      0.00000000000000E+0      0.00000000000000E+0
   BmNSMass                 4     556       1     7.00000000000000E+2
```

```
7.00000000000000E+2      0.00000000000000E+0      0.00000000000000E+0
0.00000000000000E+0      0.00000000000000E+0      1.00000000000000E+0
    0.00000000000000E+0      0.00000000000000E+0      0.00000000000000E+0
   BmNSMass                 4     557       1     7.00000000000000E+2
7.00000000000000E+2      0.00000000000000E+0      0.00000000000000E+0
0.00000000000000E+0      0.00000000000000E+0      1.00000000000000E+0
    0.00000000000000E+0      0.00000000000000E+0      0.00000000000000E+0
   BmNSMass                 4     558       1     7.00000000000000E+2
7.00000000000000E+2      0.00000000000000E+0      0.00000000000000E+0
0.00000000000000E+0      0.00000000000000E+0      1.00000000000000E+0
    0.00000000000000E+0      0.00000000000000E+0      0.00000000000000E+0
   BmNSMass                 4     649       1     1.50000000000000E+2
1.50000000000000E+2      0.00000000000000E+0      0.00000000000000E+0
0.00000000000000E+0      0.00000000000000E+0      1.00000000000000E+0
    0.00000000000000E+0      0.00000000000000E+0      0.00000000000000E+0
   BmNSMass                 4     650       1     1.50000000000000E+2
1.50000000000000E+2      0.00000000000000E+0      0.00000000000000E+0
0.00000000000000E+0      0.00000000000000E+0      1.00000000000000E+0
    0.00000000000000E+0      0.00000000000000E+0      0.00000000000000E+0
   BmNSMass                 4     651       1     1.50000000000000E+2
1.50000000000000E+2      0.00000000000000E+0      0.00000000000000E+0
0.00000000000000E+0      0.00000000000000E+0      1.00000000000000E+0
    0.00000000000000E+0      0.00000000000000E+0      0.00000000000000E+0
   BmNSMass                 4     652       1     1.50000000000000E+2
1.50000000000000E+2      0.00000000000000E+0      0.00000000000000E+0
0.00000000000000E+0      0.00000000000000E+0      1.00000000000000E+0
    0.00000000000000E+0      0.00000000000000E+0      0.00000000000000E+0
   BmNSMass                 4     653       1     3.00000000000000E+2
3.00000000000000E+2      0.00000000000000E+0      0.00000000000000E+0
0.00000000000000E+0      0.00000000000000E+0      1.00000000000000E+0
    0.00000000000000E+0      0.00000000000000E+0      0.00000000000000E+0
   BmNSMass                 4     654       1     3.00000000000000E+2
3.00000000000000E+2      0.00000000000000E+0      0.00000000000000E+0
0.00000000000000E+0      0.00000000000000E+0      1.00000000000000E+0
    0.00000000000000E+0      0.00000000000000E+0      0.00000000000000E+0
   BmNSMass                 4     655       1     3.00000000000000E+2
3.00000000000000E+2      0.00000000000000E+0      0.00000000000000E+0
0.00000000000000E+0      0.00000000000000E+0      1.00000000000000E+0
    0.00000000000000E+0      0.00000000000000E+0      0.00000000000000E+0
   BmNSMass                 4     656       1     3.00000000000000E+2
3.00000000000000E+2      0.00000000000000E+0      0.00000000000000E+0
0.00000000000000E+0      0.00000000000000E+0      1.00000000000000E+0
    0.00000000000000E+0      0.00000000000000E+0      0.00000000000000E+0
   BmNSMass                 4     657       1     3.00000000000000E+2
3.00000000000000E+2      0.00000000000000E+0      0.00000000000000E+0
0.00000000000000E+0      0.00000000000000E+0      1.00000000000000E+0
    0.00000000000000E+0      0.00000000000000E+0      0.00000000000000E+0
   BmNSMass                 4     658       1     3.00000000000000E+2
3.00000000000000E+2      0.00000000000000E+0      0.00000000000000E+0
0.00000000000000E+0      0.00000000000000E+0      1.00000000000000E+0
    0.00000000000000E+0      0.00000000000000E+0      0.00000000000000E+0
   BmNSMass                 4     659       1     3.00000000000000E+2
3.00000000000000E+2      0.00000000000000E+0      0.00000000000000E+0
0.00000000000000E+0      0.00000000000000E+0      1.00000000000000E+0
```

```
    0.00000000000000E+0      0.00000000000000E+0      0.00000000000000E+0
   BmNSMass                 4     660       1     3.00000000000000E+2
3.00000000000000E+2      0.00000000000000E+0      0.00000000000000E+0
0.00000000000000E+0      0.00000000000000E+0      1.00000000000000E+0
    0.00000000000000E+0      0.00000000000000E+0      0.00000000000000E+0
   BmNSMass                 4     661       1     3.00000000000000E+2
3.00000000000000E+2      0.00000000000000E+0      0.00000000000000E+0
0.00000000000000E+0      0.00000000000000E+0      1.00000000000000E+0
    0.00000000000000E+0      0.00000000000000E+0      0.00000000000000E+0
   BmNSMass                 4     662       1     3.00000000000000E+2
3.00000000000000E+2      0.00000000000000E+0      0.00000000000000E+0
0.00000000000000E+0      0.00000000000000E+0      1.00000000000000E+0
    0.00000000000000E+0      0.00000000000000E+0      0.00000000000000E+0
   BmNSMass                 4     663       1     3.00000000000000E+2
3.00000000000000E+2      0.00000000000000E+0      0.00000000000000E+0
0.00000000000000E+0      0.00000000000000E+0      1.00000000000000E+0
    0.00000000000000E+0      0.00000000000000E+0      0.00000000000000E+0
   BmNSMass                 4     664       1     3.00000000000000E+2
3.00000000000000E+2      0.00000000000000E+0      0.00000000000000E+0
0.00000000000000E+0      0.00000000000000E+0      1.00000000000000E+0
    0.00000000000000E+0      0.00000000000000E+0      0.00000000000000E+0
   BmNSMass                 4     665       1     3.00000000000000E+2
3.00000000000000E+2      0.00000000000000E+0      0.00000000000000E+0
0.00000000000000E+0      0.00000000000000E+0      1.00000000000000E+0
    0.00000000000000E+0      0.00000000000000E+0      0.00000000000000E+0
   BmNSMass                 4     666       1     3.00000000000000E+2
3.00000000000000E+2      0.00000000000000E+0      0.00000000000000E+0
0.00000000000000E+0      0.00000000000000E+0      1.00000000000000E+0
    0.00000000000000E+0      0.00000000000000E+0      0.00000000000000E+0
   BmNSMass                 4     667       1     3.00000000000000E+2
3.00000000000000E+2      0.00000000000000E+0      0.00000000000000E+0
0.00000000000000E+0      0.00000000000000E+0      1.00000000000000E+0
    0.00000000000000E+0      0.00000000000000E+0      0.00000000000000E+0
   BmNSMass                 4     668       1     3.00000000000000E+2
3.00000000000000E+2      0.00000000000000E+0      0.00000000000000E+0
0.00000000000000E+0      0.00000000000000E+0      1.00000000000000E+0
    0.00000000000000E+0      0.00000000000000E+0      0.00000000000000E+0

/ ______________________________________________________________________________
/ PLATE NON-STRUCTURAL MASSES
/ Q00 - Sovraccarico Accidentale
   PlNSMass                 5       1     1.00000000000000E+3
0.00000000000000E+0      0.00000000000000E+0      0.00000000000000E+0
0.00000000000000E+0
   PlNSMass                 5       2     1.00000000000000E+3
0.00000000000000E+0      0.00000000000000E+0      0.00000000000000E+0
0.00000000000000E+0
   PlNSMass                 5       3     1.00000000000000E+3
0.00000000000000E+0      0.00000000000000E+0      0.00000000000000E+0
0.00000000000000E+0
   PlNSMass                 5       4     1.00000000000000E+3
0.00000000000000E+0      0.00000000000000E+0      0.00000000000000E+0
0.00000000000000E+0
   PlNSMass                 5       5     1.00000000000000E+3
```

0.00000000000000E+0 0.00000000000000E+0 0.00000000000000E+0
0.00000000000000E+0
PlNSMass 5 6 1.00000000000000E+3
0.00000000000000E+0 0.00000000000000E+0 0.00000000000000E+0
0.00000000000000E+0
PlNSMass 5 7 1.00000000000000E+3
0.00000000000000E+0 0.00000000000000E+0 0.00000000000000E+0
0.00000000000000E+0
PlNSMass 5 8 1.00000000000000E+3
0.00000000000000E+0 0.00000000000000E+0 0.00000000000000E+0
0.00000000000000E+0
PlNSMass 5 9 1.00000000000000E+3
0.00000000000000E+0 0.00000000000000E+0 0.00000000000000E+0
0.00000000000000E+0
PlNSMass 5 10 1.00000000000000E+3
0.00000000000000E+0 0.00000000000000E+0 0.00000000000000E+0
0.00000000000000E+0
PlNSMass 5 11 1.00000000000000E+3
0.00000000000000E+0 0.00000000000000E+0 0.00000000000000E+0
0.00000000000000E+0
PlNSMass 5 12 1.00000000000000E+3
0.00000000000000E+0 0.00000000000000E+0 0.00000000000000E+0
0.00000000000000E+0
PlNSMass 5 13 1.00000000000000E+3
0.00000000000000E+0 0.00000000000000E+0 0.00000000000000E+0
0.00000000000000E+0
PlNSMass 5 14 1.00000000000000E+3
0.00000000000000E+0 0.00000000000000E+0 0.00000000000000E+0
0.00000000000000E+0
PlNSMass 5 15 1.00000000000000E+3
0.00000000000000E+0 0.00000000000000E+0 0.00000000000000E+0
0.00000000000000E+0
PlNSMass 5 16 1.00000000000000E+3
0.00000000000000E+0 0.00000000000000E+0 0.00000000000000E+0
0.00000000000000E+0
PlNSMass 5 17 1.00000000000000E+3
0.00000000000000E+0 0.00000000000000E+0 0.00000000000000E+0
0.00000000000000E+0
PlNSMass 5 18 1.00000000000000E+3
0.00000000000000E+0 0.00000000000000E+0 0.00000000000000E+0
0.00000000000000E+0
PlNSMass 5 19 1.00000000000000E+3
0.00000000000000E+0 0.00000000000000E+0 0.00000000000000E+0
0.00000000000000E+0
PlNSMass 5 20 1.00000000000000E+3
0.00000000000000E+0 0.00000000000000E+0 0.00000000000000E+0
0.00000000000000E+0
PlNSMass 5 21 1.00000000000000E+3
0.00000000000000E+0 0.00000000000000E+0 0.00000000000000E+0
0.00000000000000E+0
PlNSMass 5 22 1.00000000000000E+3
0.00000000000000E+0 0.00000000000000E+0 0.00000000000000E+0
0.00000000000000E+0
PlNSMass 5 23 1.00000000000000E+3

0.00000000000000E+0 0.00000000000000E+0 0.00000000000000E+0
0.00000000000000E+0
PlNSMass 5 24 1.00000000000000E+3
0.00000000000000E+0 0.00000000000000E+0 0.00000000000000E+0
0.00000000000000E+0
PlNSMass 5 25 1.00000000000000E+3
0.00000000000000E+0 0.00000000000000E+0 0.00000000000000E+0
0.00000000000000E+0
PlNSMass 5 26 1.00000000000000E+3
0.00000000000000E+0 0.00000000000000E+0 0.00000000000000E+0
0.00000000000000E+0
PlNSMass 5 27 1.00000000000000E+3
0.00000000000000E+0 0.00000000000000E+0 0.00000000000000E+0
0.00000000000000E+0
PlNSMass 5 28 1.00000000000000E+3
0.00000000000000E+0 0.00000000000000E+0 0.00000000000000E+0
0.00000000000000E+0
PlNSMass 5 29 1.00000000000000E+3
0.00000000000000E+0 0.00000000000000E+0 0.00000000000000E+0
0.00000000000000E+0
PlNSMass 5 30 1.00000000000000E+3
0.00000000000000E+0 0.00000000000000E+0 0.00000000000000E+0
0.00000000000000E+0
PlNSMass 5 31 1.00000000000000E+3
0.00000000000000E+0 0.00000000000000E+0 0.00000000000000E+0
0.00000000000000E+0
PlNSMass 5 32 1.00000000000000E+3
0.00000000000000E+0 0.00000000000000E+0 0.00000000000000E+0
0.00000000000000E+0
PlNSMass 5 33 1.00000000000000E+3
0.00000000000000E+0 0.00000000000000E+0 0.00000000000000E+0
0.00000000000000E+0
PlNSMass 5 34 1.00000000000000E+3
0.00000000000000E+0 0.00000000000000E+0 0.00000000000000E+0
0.00000000000000E+0
PlNSMass 5 35 1.00000000000000E+3
0.00000000000000E+0 0.00000000000000E+0 0.00000000000000E+0
0.00000000000000E+0
PlNSMass 5 36 1.00000000000000E+3
0.00000000000000E+0 0.00000000000000E+0 0.00000000000000E+0
0.00000000000000E+0
PlNSMass 5 37 1.00000000000000E+3
0.00000000000000E+0 0.00000000000000E+0 0.00000000000000E+0
0.00000000000000E+0
PlNSMass 5 38 1.00000000000000E+3
0.00000000000000E+0 0.00000000000000E+0 0.00000000000000E+0
0.00000000000000E+0
PlNSMass 5 39 1.00000000000000E+3
0.00000000000000E+0 0.00000000000000E+0 0.00000000000000E+0
0.00000000000000E+0
PlNSMass 5 40 1.00000000000000E+3
0.00000000000000E+0 0.00000000000000E+0 0.00000000000000E+0
0.00000000000000E+0
PlNSMass 5 41 1.00000000000000E+3

0.00000000000000E+0 0.00000000000000E+0 0.00000000000000E+0
0.00000000000000E+0
PlNSMass 5 42 1.00000000000000E+3
0.00000000000000E+0 0.00000000000000E+0 0.00000000000000E+0
0.00000000000000E+0
PlNSMass 5 43 1.00000000000000E+3
0.00000000000000E+0 0.00000000000000E+0 0.00000000000000E+0
0.00000000000000E+0
PlNSMass 5 44 1.00000000000000E+3
0.00000000000000E+0 0.00000000000000E+0 0.00000000000000E+0
0.00000000000000E+0
PlNSMass 5 45 1.00000000000000E+3
0.00000000000000E+0 0.00000000000000E+0 0.00000000000000E+0
0.00000000000000E+0
PlNSMass 5 46 1.00000000000000E+3
0.00000000000000E+0 0.00000000000000E+0 0.00000000000000E+0
0.00000000000000E+0
PlNSMass 5 47 1.00000000000000E+3
0.00000000000000E+0 0.00000000000000E+0 0.00000000000000E+0
0.00000000000000E+0
PlNSMass 5 48 1.00000000000000E+3
0.00000000000000E+0 0.00000000000000E+0 0.00000000000000E+0
0.00000000000000E+0
PlNSMass 5 49 1.00000000000000E+3
0.00000000000000E+0 0.00000000000000E+0 0.00000000000000E+0
0.00000000000000E+0
PlNSMass 5 50 1.00000000000000E+3
0.00000000000000E+0 0.00000000000000E+0 0.00000000000000E+0
0.00000000000000E+0
PlNSMass 5 51 1.00000000000000E+3
0.00000000000000E+0 0.00000000000000E+0 0.00000000000000E+0
0.00000000000000E+0
PlNSMass 5 52 1.00000000000000E+3
0.00000000000000E+0 0.00000000000000E+0 0.00000000000000E+0
0.00000000000000E+0
PlNSMass 5 53 1.00000000000000E+3
0.00000000000000E+0 0.00000000000000E+0 0.00000000000000E+0
0.00000000000000E+0
PlNSMass 5 54 1.00000000000000E+3
0.00000000000000E+0 0.00000000000000E+0 0.00000000000000E+0
0.00000000000000E+0
PlNSMass 5 55 1.00000000000000E+3
0.00000000000000E+0 0.00000000000000E+0 0.00000000000000E+0
0.00000000000000E+0
PlNSMass 5 56 1.00000000000000E+3
0.00000000000000E+0 0.00000000000000E+0 0.00000000000000E+0
0.00000000000000E+0
PlNSMass 5 57 1.00000000000000E+3
0.00000000000000E+0 0.00000000000000E+0 0.00000000000000E+0
0.00000000000000E+0
PlNSMass 5 58 1.00000000000000E+3
0.00000000000000E+0 0.00000000000000E+0 0.00000000000000E+0
0.00000000000000E+0
PlNSMass 5 59 1.00000000000000E+3

0.00000000000000E+0 0.00000000000000E+0 0.00000000000000E+0
0.00000000000000E+0
PlNSMass 5 60 1.00000000000000E+3
0.00000000000000E+0 0.00000000000000E+0 0.00000000000000E+0
0.00000000000000E+0
PlNSMass 5 61 1.00000000000000E+3
0.00000000000000E+0 0.00000000000000E+0 0.00000000000000E+0
0.00000000000000E+0
PlNSMass 5 62 1.00000000000000E+3
0.00000000000000E+0 0.00000000000000E+0 0.00000000000000E+0
0.00000000000000E+0
PlNSMass 5 63 1.00000000000000E+3
0.00000000000000E+0 0.00000000000000E+0 0.00000000000000E+0
0.00000000000000E+0
PlNSMass 5 64 1.00000000000000E+3
0.00000000000000E+0 0.00000000000000E+0 0.00000000000000E+0
0.00000000000000E+0
PlNSMass 5 65 1.00000000000000E+3
0.00000000000000E+0 0.00000000000000E+0 0.00000000000000E+0
0.00000000000000E+0
PlNSMass 5 66 1.00000000000000E+3
0.00000000000000E+0 0.00000000000000E+0 0.00000000000000E+0
0.00000000000000E+0
PlNSMass 5 67 1.00000000000000E+3
0.00000000000000E+0 0.00000000000000E+0 0.00000000000000E+0
0.00000000000000E+0
PlNSMass 5 68 1.00000000000000E+3
0.00000000000000E+0 0.00000000000000E+0 0.00000000000000E+0
0.00000000000000E+0
PlNSMass 5 69 1.00000000000000E+3
0.00000000000000E+0 0.00000000000000E+0 0.00000000000000E+0
0.00000000000000E+0
PlNSMass 5 70 1.00000000000000E+3
0.00000000000000E+0 0.00000000000000E+0 0.00000000000000E+0
0.00000000000000E+0
PlNSMass 5 71 1.00000000000000E+3
0.00000000000000E+0 0.00000000000000E+0 0.00000000000000E+0
0.00000000000000E+0
PlNSMass 5 72 1.00000000000000E+3
0.00000000000000E+0 0.00000000000000E+0 0.00000000000000E+0
0.00000000000000E+0
PlNSMass 5 73 1.00000000000000E+3
0.00000000000000E+0 0.00000000000000E+0 0.00000000000000E+0
0.00000000000000E+0
PlNSMass 5 74 1.00000000000000E+3
0.00000000000000E+0 0.00000000000000E+0 0.00000000000000E+0
0.00000000000000E+0
PlNSMass 5 75 1.00000000000000E+3
0.00000000000000E+0 0.00000000000000E+0 0.00000000000000E+0
0.00000000000000E+0
PlNSMass 5 76 1.00000000000000E+3
0.00000000000000E+0 0.00000000000000E+0 0.00000000000000E+0
0.00000000000000E+0
PlNSMass 5 77 1.00000000000000E+3

```
0.00000000000000E+0      0.00000000000000E+0      0.00000000000000E+0
0.00000000000000E+0
   PlNSMass                 5      78     1.00000000000000E+3
0.00000000000000E+0      0.00000000000000E+0      0.00000000000000E+0
0.00000000000000E+0
   PlNSMass                 5      79     1.00000000000000E+3
0.00000000000000E+0      0.00000000000000E+0      0.00000000000000E+0
0.00000000000000E+0
   PlNSMass                 5      80     1.00000000000000E+3
0.00000000000000E+0      0.00000000000000E+0      0.00000000000000E+0
0.00000000000000E+0
   PlNSMass                 5      81     1.00000000000000E+3
0.00000000000000E+0      0.00000000000000E+0      0.00000000000000E+0
0.00000000000000E+0
   PlNSMass                 5      82     1.00000000000000E+3
0.00000000000000E+0      0.00000000000000E+0      0.00000000000000E+0
0.00000000000000E+0
   PlNSMass                 5      83     1.00000000000000E+3
0.00000000000000E+0      0.00000000000000E+0      0.00000000000000E+0
0.00000000000000E+0
   PlNSMass                 5      84     1.00000000000000E+3
0.00000000000000E+0      0.00000000000000E+0      0.00000000000000E+0
0.00000000000000E+0
   PlNSMass                 5      85     1.00000000000000E+3
0.00000000000000E+0      0.00000000000000E+0      0.00000000000000E+0
0.00000000000000E+0
   PlNSMass                 5      86     1.00000000000000E+3
0.00000000000000E+0      0.00000000000000E+0      0.00000000000000E+0
0.00000000000000E+0
   PlNSMass                 5      87     1.00000000000000E+3
0.00000000000000E+0      0.00000000000000E+0      0.00000000000000E+0
0.00000000000000E+0
   PlNSMass                 5      88     1.00000000000000E+3
0.00000000000000E+0      0.00000000000000E+0      0.00000000000000E+0
0.00000000000000E+0
   PlNSMass                 5      89     1.00000000000000E+3
0.00000000000000E+0      0.00000000000000E+0      0.00000000000000E+0
0.00000000000000E+0
   PlNSMass                 5      90     1.00000000000000E+3
0.00000000000000E+0      0.00000000000000E+0      0.00000000000000E+0
0.00000000000000E+0
   PlNSMass                 5      91     1.00000000000000E+3
0.00000000000000E+0      0.00000000000000E+0      0.00000000000000E+0
0.00000000000000E+0
   PlNSMass                 5      92     1.00000000000000E+3
0.00000000000000E+0      0.00000000000000E+0      0.00000000000000E+0
0.00000000000000E+0
   PlNSMass                 5      93     1.00000000000000E+3
0.00000000000000E+0      0.00000000000000E+0      0.00000000000000E+0
0.00000000000000E+0
   PlNSMass                 5      94     1.00000000000000E+3
0.00000000000000E+0      0.00000000000000E+0      0.00000000000000E+0
0.00000000000000E+0
   PlNSMass                 5      95     1.00000000000000E+3
```

0.00000000000000E+0 0.00000000000000E+0 0.00000000000000E+0
0.00000000000000E+0
PlNSMass 5 96 1.00000000000000E+3
0.00000000000000E+0 0.00000000000000E+0 0.00000000000000E+0
0.00000000000000E+0
PlNSMass 5 97 1.00000000000000E+3
0.00000000000000E+0 0.00000000000000E+0 0.00000000000000E+0
0.00000000000000E+0
PlNSMass 5 98 1.00000000000000E+3
0.00000000000000E+0 0.00000000000000E+0 0.00000000000000E+0
0.00000000000000E+0
PlNSMass 5 99 1.00000000000000E+3
0.00000000000000E+0 0.00000000000000E+0 0.00000000000000E+0
0.00000000000000E+0
PlNSMass 5 100 1.00000000000000E+3
0.00000000000000E+0 0.00000000000000E+0 0.00000000000000E+0
0.00000000000000E+0
PlNSMass 5 101 1.00000000000000E+3
0.00000000000000E+0 0.00000000000000E+0 0.00000000000000E+0
0.00000000000000E+0
PlNSMass 5 102 1.00000000000000E+3
0.00000000000000E+0 0.00000000000000E+0 0.00000000000000E+0
0.00000000000000E+0
PlNSMass 5 103 1.00000000000000E+3
0.00000000000000E+0 0.00000000000000E+0 0.00000000000000E+0
0.00000000000000E+0
PlNSMass 5 104 1.00000000000000E+3
0.00000000000000E+0 0.00000000000000E+0 0.00000000000000E+0
0.00000000000000E+0
PlNSMass 5 105 1.00000000000000E+3
0.00000000000000E+0 0.00000000000000E+0 0.00000000000000E+0
0.00000000000000E+0
PlNSMass 5 106 1.00000000000000E+3
0.00000000000000E+0 0.00000000000000E+0 0.00000000000000E+0
0.00000000000000E+0
PlNSMass 5 107 1.00000000000000E+3
0.00000000000000E+0 0.00000000000000E+0 0.00000000000000E+0
0.00000000000000E+0
PlNSMass 5 108 1.00000000000000E+3
0.00000000000000E+0 0.00000000000000E+0 0.00000000000000E+0
0.00000000000000E+0
PlNSMass 5 109 1.00000000000000E+3
0.00000000000000E+0 0.00000000000000E+0 0.00000000000000E+0
0.00000000000000E+0
PlNSMass 5 110 1.00000000000000E+3
0.00000000000000E+0 0.00000000000000E+0 0.00000000000000E+0
0.00000000000000E+0
PlNSMass 5 111 1.00000000000000E+3
0.00000000000000E+0 0.00000000000000E+0 0.00000000000000E+0
0.00000000000000E+0
PlNSMass 5 112 1.00000000000000E+3
0.00000000000000E+0 0.00000000000000E+0 0.00000000000000E+0
0.00000000000000E+0
PlNSMass 5 113 1.00000000000000E+3

0.00000000000000E+0 0.00000000000000E+0 0.00000000000000E+0
0.00000000000000E+0
PlNSMass 5 114 1.00000000000000E+3
0.00000000000000E+0 0.00000000000000E+0 0.00000000000000E+0
0.00000000000000E+0
PlNSMass 5 115 1.00000000000000E+3
0.00000000000000E+0 0.00000000000000E+0 0.00000000000000E+0
0.00000000000000E+0
PlNSMass 5 116 1.00000000000000E+3
0.00000000000000E+0 0.00000000000000E+0 0.00000000000000E+0
0.00000000000000E+0
PlNSMass 5 117 1.00000000000000E+3
0.00000000000000E+0 0.00000000000000E+0 0.00000000000000E+0
0.00000000000000E+0
PlNSMass 5 118 1.00000000000000E+3
0.00000000000000E+0 0.00000000000000E+0 0.00000000000000E+0
0.00000000000000E+0
PlNSMass 5 119 1.00000000000000E+3
0.00000000000000E+0 0.00000000000000E+0 0.00000000000000E+0
0.00000000000000E+0
PlNSMass 5 120 1.00000000000000E+3
0.00000000000000E+0 0.00000000000000E+0 0.00000000000000E+0
0.00000000000000E+0
PlNSMass 5 121 1.00000000000000E+3
0.00000000000000E+0 0.00000000000000E+0 0.00000000000000E+0
0.00000000000000E+0
PlNSMass 5 122 1.00000000000000E+3
0.00000000000000E+0 0.00000000000000E+0 0.00000000000000E+0
0.00000000000000E+0
PlNSMass 5 123 1.00000000000000E+3
0.00000000000000E+0 0.00000000000000E+0 0.00000000000000E+0
0.00000000000000E+0
PlNSMass 5 124 1.00000000000000E+3
0.00000000000000E+0 0.00000000000000E+0 0.00000000000000E+0
0.00000000000000E+0
PlNSMass 5 125 1.00000000000000E+3
0.00000000000000E+0 0.00000000000000E+0 0.00000000000000E+0
0.00000000000000E+0
PlNSMass 5 126 1.00000000000000E+3
0.00000000000000E+0 0.00000000000000E+0 0.00000000000000E+0
0.00000000000000E+0
PlNSMass 5 127 1.00000000000000E+3
0.00000000000000E+0 0.00000000000000E+0 0.00000000000000E+0
0.00000000000000E+0
PlNSMass 5 128 1.00000000000000E+3
0.00000000000000E+0 0.00000000000000E+0 0.00000000000000E+0
0.00000000000000E+0
PlNSMass 5 129 1.00000000000000E+3
0.00000000000000E+0 0.00000000000000E+0 0.00000000000000E+0
0.00000000000000E+0
PlNSMass 5 130 1.00000000000000E+3
0.00000000000000E+0 0.00000000000000E+0 0.00000000000000E+0
0.00000000000000E+0
PlNSMass 5 131 1.00000000000000E+3

0.00000000000000E+0 0.00000000000000E+0 0.00000000000000E+0
0.00000000000000E+0
PlNSMass 5 132 1.00000000000000E+3
0.00000000000000E+0 0.00000000000000E+0 0.00000000000000E+0
0.00000000000000E+0
PlNSMass 5 133 1.00000000000000E+3
0.00000000000000E+0 0.00000000000000E+0 0.00000000000000E+0
0.00000000000000E+0
PlNSMass 5 134 1.00000000000000E+3
0.00000000000000E+0 0.00000000000000E+0 0.00000000000000E+0
0.00000000000000E+0
PlNSMass 5 135 1.00000000000000E+3
0.00000000000000E+0 0.00000000000000E+0 0.00000000000000E+0
0.00000000000000E+0
PlNSMass 5 136 1.00000000000000E+3
0.00000000000000E+0 0.00000000000000E+0 0.00000000000000E+0
0.00000000000000E+0
PlNSMass 5 137 1.00000000000000E+3
0.00000000000000E+0 0.00000000000000E+0 0.00000000000000E+0
0.00000000000000E+0
PlNSMass 5 138 1.00000000000000E+3
0.00000000000000E+0 0.00000000000000E+0 0.00000000000000E+0
0.00000000000000E+0
PlNSMass 5 139 1.00000000000000E+3
0.00000000000000E+0 0.00000000000000E+0 0.00000000000000E+0
0.00000000000000E+0
PlNSMass 5 140 1.00000000000000E+3
0.00000000000000E+0 0.00000000000000E+0 0.00000000000000E+0
0.00000000000000E+0
PlNSMass 5 141 1.00000000000000E+3
0.00000000000000E+0 0.00000000000000E+0 0.00000000000000E+0
0.00000000000000E+0
PlNSMass 5 142 1.00000000000000E+3
0.00000000000000E+0 0.00000000000000E+0 0.00000000000000E+0
0.00000000000000E+0
PlNSMass 5 143 1.00000000000000E+3
0.00000000000000E+0 0.00000000000000E+0 0.00000000000000E+0
0.00000000000000E+0
PlNSMass 5 144 1.00000000000000E+3
0.00000000000000E+0 0.00000000000000E+0 0.00000000000000E+0
0.00000000000000E+0
PlNSMass 5 145 1.00000000000000E+3
0.00000000000000E+0 0.00000000000000E+0 0.00000000000000E+0
0.00000000000000E+0
PlNSMass 5 146 1.00000000000000E+3
0.00000000000000E+0 0.00000000000000E+0 0.00000000000000E+0
0.00000000000000E+0
PlNSMass 5 147 1.00000000000000E+3
0.00000000000000E+0 0.00000000000000E+0 0.00000000000000E+0
0.00000000000000E+0
PlNSMass 5 148 1.00000000000000E+3
0.00000000000000E+0 0.00000000000000E+0 0.00000000000000E+0
0.00000000000000E+0
PlNSMass 5 149 1.00000000000000E+3

0.00000000000000E+0 0.00000000000000E+0 0.00000000000000E+0
0.00000000000000E+0
PlNSMass 5 150 1.00000000000000E+3
0.00000000000000E+0 0.00000000000000E+0 0.00000000000000E+0
0.00000000000000E+0
PlNSMass 5 151 1.00000000000000E+3
0.00000000000000E+0 0.00000000000000E+0 0.00000000000000E+0
0.00000000000000E+0
PlNSMass 5 152 1.00000000000000E+3
0.00000000000000E+0 0.00000000000000E+0 0.00000000000000E+0
0.00000000000000E+0
PlNSMass 5 153 1.00000000000000E+3
0.00000000000000E+0 0.00000000000000E+0 0.00000000000000E+0
0.00000000000000E+0
PlNSMass 5 154 1.00000000000000E+3
0.00000000000000E+0 0.00000000000000E+0 0.00000000000000E+0
0.00000000000000E+0
PlNSMass 5 155 1.00000000000000E+3
0.00000000000000E+0 0.00000000000000E+0 0.00000000000000E+0
0.00000000000000E+0
PlNSMass 5 156 1.00000000000000E+3
0.00000000000000E+0 0.00000000000000E+0 0.00000000000000E+0
0.00000000000000E+0
PlNSMass 5 157 1.00000000000000E+3
0.00000000000000E+0 0.00000000000000E+0 0.00000000000000E+0
0.00000000000000E+0
PlNSMass 5 158 1.00000000000000E+3
0.00000000000000E+0 0.00000000000000E+0 0.00000000000000E+0
0.00000000000000E+0
PlNSMass 5 159 1.00000000000000E+3
0.00000000000000E+0 0.00000000000000E+0 0.00000000000000E+0
0.00000000000000E+0
PlNSMass 5 160 1.00000000000000E+3
0.00000000000000E+0 0.00000000000000E+0 0.00000000000000E+0
0.00000000000000E+0
PlNSMass 5 161 1.00000000000000E+3
0.00000000000000E+0 0.00000000000000E+0 0.00000000000000E+0
0.00000000000000E+0
PlNSMass 5 162 1.00000000000000E+3
0.00000000000000E+0 0.00000000000000E+0 0.00000000000000E+0
0.00000000000000E+0
PlNSMass 5 163 1.00000000000000E+3
0.00000000000000E+0 0.00000000000000E+0 0.00000000000000E+0
0.00000000000000E+0
PlNSMass 5 164 1.00000000000000E+3
0.00000000000000E+0 0.00000000000000E+0 0.00000000000000E+0
0.00000000000000E+0
PlNSMass 5 165 1.00000000000000E+3
0.00000000000000E+0 0.00000000000000E+0 0.00000000000000E+0
0.00000000000000E+0
PlNSMass 5 166 1.00000000000000E+3
0.00000000000000E+0 0.00000000000000E+0 0.00000000000000E+0
0.00000000000000E+0
PlNSMass 5 167 1.00000000000000E+3

```
0.00000000000000E+0      0.00000000000000E+0      0.00000000000000E+0
0.00000000000000E+0
   PlNSMass                 5     168     1.00000000000000E+3
0.00000000000000E+0      0.00000000000000E+0      0.00000000000000E+0
0.00000000000000E+0
   PlNSMass                 5     281     1.00000000000000E+3
0.00000000000000E+0      0.00000000000000E+0      0.00000000000000E+0
0.00000000000000E+0
   PlNSMass                 5     282     1.00000000000000E+3
0.00000000000000E+0      0.00000000000000E+0      0.00000000000000E+0
0.00000000000000E+0
   PlNSMass                 5     283     1.00000000000000E+3
0.00000000000000E+0      0.00000000000000E+0      0.00000000000000E+0
0.00000000000000E+0
   PlNSMass                 5     284     1.00000000000000E+3
0.00000000000000E+0      0.00000000000000E+0      0.00000000000000E+0
0.00000000000000E+0
   PlNSMass                 5     285     1.00000000000000E+3
0.00000000000000E+0      0.00000000000000E+0      0.00000000000000E+0
0.00000000000000E+0
   PlNSMass                 5     286     1.00000000000000E+3
0.00000000000000E+0      0.00000000000000E+0      0.00000000000000E+0
0.00000000000000E+0
   PlNSMass                 5     287     1.00000000000000E+3
0.00000000000000E+0      0.00000000000000E+0      0.00000000000000E+0
0.00000000000000E+0
   PlNSMass                 5     288     1.00000000000000E+3
0.00000000000000E+0      0.00000000000000E+0      0.00000000000000E+0
0.00000000000000E+0
   PlNSMass                 5     289     1.00000000000000E+3
0.00000000000000E+0      0.00000000000000E+0      0.00000000000000E+0
0.00000000000000E+0
   PlNSMass                 5     290     1.00000000000000E+3
0.00000000000000E+0      0.00000000000000E+0      0.00000000000000E+0
0.00000000000000E+0
   PlNSMass                 5     291     1.00000000000000E+3
0.00000000000000E+0      0.00000000000000E+0      0.00000000000000E+0
0.00000000000000E+0
   PlNSMass                 5     292     1.00000000000000E+3
0.00000000000000E+0      0.00000000000000E+0      0.00000000000000E+0
0.00000000000000E+0
   PlNSMass                 5     293     1.00000000000000E+3
0.00000000000000E+0      0.00000000000000E+0      0.00000000000000E+0
0.00000000000000E+0
   PlNSMass                 5     294     1.00000000000000E+3
0.00000000000000E+0      0.00000000000000E+0      0.00000000000000E+0
0.00000000000000E+0
   PlNSMass                 5     295     1.00000000000000E+3
0.00000000000000E+0      0.00000000000000E+0      0.00000000000000E+0
0.00000000000000E+0
   PlNSMass                 5     296     1.00000000000000E+3
0.00000000000000E+0      0.00000000000000E+0      0.00000000000000E+0
0.00000000000000E+0
   PlNSMass                 5     297     1.00000000000000E+3
```

0.00000000000000E+0 0.00000000000000E+0 0.00000000000000E+0
0.00000000000000E+0
PlNSMass 5 298 1.00000000000000E+3
0.00000000000000E+0 0.00000000000000E+0 0.00000000000000E+0
0.00000000000000E+0
PlNSMass 5 299 1.00000000000000E+3
0.00000000000000E+0 0.00000000000000E+0 0.00000000000000E+0
0.00000000000000E+0
PlNSMass 5 300 1.00000000000000E+3
0.00000000000000E+0 0.00000000000000E+0 0.00000000000000E+0
0.00000000000000E+0
PlNSMass 5 301 1.00000000000000E+3
0.00000000000000E+0 0.00000000000000E+0 0.00000000000000E+0
0.00000000000000E+0
PlNSMass 5 302 1.00000000000000E+3
0.00000000000000E+0 0.00000000000000E+0 0.00000000000000E+0
0.00000000000000E+0
PlNSMass 5 303 1.00000000000000E+3
0.00000000000000E+0 0.00000000000000E+0 0.00000000000000E+0
0.00000000000000E+0
PlNSMass 5 304 1.00000000000000E+3
0.00000000000000E+0 0.00000000000000E+0 0.00000000000000E+0
0.00000000000000E+0
PlNSMass 5 305 1.00000000000000E+3
0.00000000000000E+0 0.00000000000000E+0 0.00000000000000E+0
0.00000000000000E+0
PlNSMass 5 306 1.00000000000000E+3
0.00000000000000E+0 0.00000000000000E+0 0.00000000000000E+0
0.00000000000000E+0
PlNSMass 5 307 1.00000000000000E+3
0.00000000000000E+0 0.00000000000000E+0 0.00000000000000E+0
0.00000000000000E+0
PlNSMass 5 308 1.00000000000000E+3
0.00000000000000E+0 0.00000000000000E+0 0.00000000000000E+0
0.00000000000000E+0
PlNSMass 5 309 1.00000000000000E+3
0.00000000000000E+0 0.00000000000000E+0 0.00000000000000E+0
0.00000000000000E+0
PlNSMass 5 310 1.00000000000000E+3
0.00000000000000E+0 0.00000000000000E+0 0.00000000000000E+0
0.00000000000000E+0
PlNSMass 5 311 1.00000000000000E+3
0.00000000000000E+0 0.00000000000000E+0 0.00000000000000E+0
0.00000000000000E+0
PlNSMass 5 312 1.00000000000000E+3
0.00000000000000E+0 0.00000000000000E+0 0.00000000000000E+0
0.00000000000000E+0
PlNSMass 5 313 1.00000000000000E+3
0.00000000000000E+0 0.00000000000000E+0 0.00000000000000E+0
0.00000000000000E+0
PlNSMass 5 314 1.00000000000000E+3
0.00000000000000E+0 0.00000000000000E+0 0.00000000000000E+0
0.00000000000000E+0
PlNSMass 5 315 1.00000000000000E+3

0.00000000000000E+0 0.00000000000000E+0 0.00000000000000E+0
0.00000000000000E+0
PlNSMass 5 316 1.00000000000000E+3
0.00000000000000E+0 0.00000000000000E+0 0.00000000000000E+0
0.00000000000000E+0
PlNSMass 5 317 1.00000000000000E+3
0.00000000000000E+0 0.00000000000000E+0 0.00000000000000E+0
0.00000000000000E+0
PlNSMass 5 318 1.00000000000000E+3
0.00000000000000E+0 0.00000000000000E+0 0.00000000000000E+0
0.00000000000000E+0
PlNSMass 5 319 1.00000000000000E+3
0.00000000000000E+0 0.00000000000000E+0 0.00000000000000E+0
0.00000000000000E+0
PlNSMass 5 320 1.00000000000000E+3
0.00000000000000E+0 0.00000000000000E+0 0.00000000000000E+0
0.00000000000000E+0
PlNSMass 5 321 1.00000000000000E+3
0.00000000000000E+0 0.00000000000000E+0 0.00000000000000E+0
0.00000000000000E+0
PlNSMass 5 322 1.00000000000000E+3
0.00000000000000E+0 0.00000000000000E+0 0.00000000000000E+0
0.00000000000000E+0
PlNSMass 5 323 1.00000000000000E+3
0.00000000000000E+0 0.00000000000000E+0 0.00000000000000E+0
0.00000000000000E+0
PlNSMass 5 324 1.00000000000000E+3
0.00000000000000E+0 0.00000000000000E+0 0.00000000000000E+0
0.00000000000000E+0
PlNSMass 5 325 1.00000000000000E+3
0.00000000000000E+0 0.00000000000000E+0 0.00000000000000E+0
0.00000000000000E+0
PlNSMass 5 326 1.00000000000000E+3
0.00000000000000E+0 0.00000000000000E+0 0.00000000000000E+0
0.00000000000000E+0
PlNSMass 5 327 1.00000000000000E+3
0.00000000000000E+0 0.00000000000000E+0 0.00000000000000E+0
0.00000000000000E+0
PlNSMass 5 328 1.00000000000000E+3
0.00000000000000E+0 0.00000000000000E+0 0.00000000000000E+0
0.00000000000000E+0
PlNSMass 5 329 1.00000000000000E+3
0.00000000000000E+0 0.00000000000000E+0 0.00000000000000E+0
0.00000000000000E+0
PlNSMass 5 330 1.00000000000000E+3
0.00000000000000E+0 0.00000000000000E+0 0.00000000000000E+0
0.00000000000000E+0
PlNSMass 5 331 1.00000000000000E+3
0.00000000000000E+0 0.00000000000000E+0 0.00000000000000E+0
0.00000000000000E+0
PlNSMass 5 332 1.00000000000000E+3
0.00000000000000E+0 0.00000000000000E+0 0.00000000000000E+0
0.00000000000000E+0
PlNSMass 5 333 1.00000000000000E+3

```
0.00000000000000E+0      0.00000000000000E+0      0.00000000000000E+0
0.00000000000000E+0
   PlNSMass                 5     334     1.00000000000000E+3
0.00000000000000E+0      0.00000000000000E+0      0.00000000000000E+0
0.00000000000000E+0
   PlNSMass                 5     335     1.00000000000000E+3
0.00000000000000E+0      0.00000000000000E+0      0.00000000000000E+0
0.00000000000000E+0
   PlNSMass                 5     336     1.00000000000000E+3
0.00000000000000E+0      0.00000000000000E+0      0.00000000000000E+0
0.00000000000000E+0

/ ____________________________________________________________________________
/ BEAM GLOBAL DISTRIBUTED LOADS
/ Q01 - Carico Neve
   BmDistLoadG              6      13      Z      1    -2.37000000000000E+0
-2.37000000000000E+0      0.00000000000000E+0      0.00000000000000E+0
0.00000000000000E+0      0.00000000000000E+0
   BmDistLoadG              6      14      Z      1    -4.74000000000000E+0
-4.74000000000000E+0      0.00000000000000E+0      0.00000000000000E+0
0.00000000000000E+0      0.00000000000000E+0
   BmDistLoadG              6      15      Z      1    -4.74000000000000E+0
-4.74000000000000E+0      0.00000000000000E+0      0.00000000000000E+0
0.00000000000000E+0      0.00000000000000E+0
   BmDistLoadG              6      16      Z      1    -4.74000000000000E+0
-4.74000000000000E+0      0.00000000000000E+0      0.00000000000000E+0
0.00000000000000E+0      0.00000000000000E+0
   BmDistLoadG              6      17      Z      1    -4.74000000000000E+0
-4.74000000000000E+0      0.00000000000000E+0      0.00000000000000E+0
0.00000000000000E+0      0.00000000000000E+0
   BmDistLoadG              6      18      Z      1    -4.74000000000000E+0
-4.74000000000000E+0      0.00000000000000E+0      0.00000000000000E+0
0.00000000000000E+0      0.00000000000000E+0
   BmDistLoadG              6      19      Z      1    -4.74000000000000E+0
-4.74000000000000E+0      0.00000000000000E+0      0.00000000000000E+0
0.00000000000000E+0      0.00000000000000E+0
   BmDistLoadG              6      20      Z      1    -4.74000000000000E+0
-4.74000000000000E+0      0.00000000000000E+0      0.00000000000000E+0
0.00000000000000E+0      0.00000000000000E+0
   BmDistLoadG              6      21      Z      1    -4.74000000000000E+0
-4.74000000000000E+0      0.00000000000000E+0      0.00000000000000E+0
0.00000000000000E+0      0.00000000000000E+0
   BmDistLoadG              6      22      Z      1    -2.37000000000000E+0
-2.37000000000000E+0      0.00000000000000E+0      0.00000000000000E+0
0.00000000000000E+0      0.00000000000000E+0
   BmDistLoadG              6     164      Z      1    -2.37000000000000E+0
-2.37000000000000E+0      0.00000000000000E+0      0.00000000000000E+0
0.00000000000000E+0      0.00000000000000E+0
   BmDistLoadG              6     165      Z      1    -2.37000000000000E+0
-2.37000000000000E+0      0.00000000000000E+0      0.00000000000000E+0
0.00000000000000E+0      0.00000000000000E+0
   BmDistLoadG              6     166      Z      1    -2.37000000000000E+0
-2.37000000000000E+0      0.00000000000000E+0      0.00000000000000E+0
0.00000000000000E+0      0.00000000000000E+0
```

```
   BmDistLoadG             6    167      Z      1   -2.37000000000000E+0
-2.37000000000000E+0      0.00000000000000E+0      0.00000000000000E+0
0.00000000000000E+0      0.00000000000000E+0
   BmDistLoadG             6    168      Z      1   -2.37000000000000E+0
-2.37000000000000E+0      0.00000000000000E+0      0.00000000000000E+0
0.00000000000000E+0      0.00000000000000E+0
   BmDistLoadG             6    169      Z      1   -2.37000000000000E+0
-2.37000000000000E+0      0.00000000000000E+0      0.00000000000000E+0
0.00000000000000E+0      0.00000000000000E+0
   BmDistLoadG             6    170      Z      1   -2.37000000000000E+0
-2.37000000000000E+0      0.00000000000000E+0      0.00000000000000E+0
0.00000000000000E+0      0.00000000000000E+0
   BmDistLoadG             6    171      Z      1   -2.37000000000000E+0
-2.37000000000000E+0      0.00000000000000E+0      0.00000000000000E+0
0.00000000000000E+0       0.00000000000000E+0
   BmDistLoadG             6    172      Z      1   -2.37000000000000E+0
-2.37000000000000E+0      0.00000000000000E+0      0.00000000000000E+0
0.00000000000000E+0      0.00000000000000E+0
   BmDistLoadG             6    173      Z      1   -2.37000000000000E+0
-2.37000000000000E+0      0.00000000000000E+0      0.00000000000000E+0
0.00000000000000E+0      0.00000000000000E+0
   BmDistLoadG             6    174      Z      1   -2.37000000000000E+0
-2.37000000000000E+0      0.00000000000000E+0      0.00000000000000E+0
0.00000000000000E+0      0.00000000000000E+0
   BmDistLoadG             6    175      Z      1   -2.37000000000000E+0
-2.37000000000000E+0      0.00000000000000E+0      0.00000000000000E+0
0.00000000000000E+0       0.00000000000000E+0
   BmDistLoadG             6    176      Z      1   -2.37000000000000E+0
-2.37000000000000E+0      0.00000000000000E+0      0.00000000000000E+0
0.00000000000000E+0      0.00000000000000E+0
   BmDistLoadG             6    177      Z      1   -2.37000000000000E+0
-2.37000000000000E+0      0.00000000000000E+0      0.00000000000000E+0
0.00000000000000E+0      0.00000000000000E+0
   BmDistLoadG             6    178      Z      1   -2.37000000000000E+0
-2.37000000000000E+0      0.00000000000000E+0      0.00000000000000E+0
0.00000000000000E+0      0.00000000000000E+0
   BmDistLoadG             6    179      Z      1   -2.37000000000000E+0
-2.37000000000000E+0      0.00000000000000E+0      0.00000000000000E+0
0.00000000000000E+0      0.00000000000000E+0
   BmDistLoadG             6    180      Z      1   -2.37000000000000E+0
-2.37000000000000E+0      0.00000000000000E+0      0.00000000000000E+0
0.00000000000000E+0      0.00000000000000E+0
   BmDistLoadG             6    181      Z      1   -2.37000000000000E+0
-2.37000000000000E+0      0.00000000000000E+0      0.00000000000000E+0
0.00000000000000E+0      0.00000000000000E+0
   BmDistLoadG             6    182      Z      1   -2.37000000000000E+0
-2.37000000000000E+0      0.00000000000000E+0      0.00000000000000E+0
0.00000000000000E+0      0.00000000000000E+0
   BmDistLoadG             6    183      Z      1   -2.37000000000000E+0
-2.37000000000000E+0      0.00000000000000E+0      0.00000000000000E+0
0.00000000000000E+0      0.00000000000000E+0
   BmDistLoadG             6    184      Z      1   -2.37000000000000E+0
-2.37000000000000E+0      0.00000000000000E+0      0.00000000000000E+0
0.00000000000000E+0      0.00000000000000E+0
```

```
   BmDistLoadG              6     185       Z       1    -2.37000000000000E+0
-2.37000000000000E+0      0.00000000000000E+0      0.00000000000000E+0
0.00000000000000E+0      0.00000000000000E+0
   BmDistLoadG              6     186       Z       1    -2.37000000000000E+0
-2.37000000000000E+0      0.00000000000000E+0      0.00000000000000E+0
0.00000000000000E+0      0.00000000000000E+0
   BmDistLoadG              6     187       Z       1    -2.37000000000000E+0
-2.37000000000000E+0      0.00000000000000E+0      0.00000000000000E+0
0.00000000000000E+0      0.00000000000000E+0
   BmDistLoadG              6     188       Z       1    -2.37000000000000E+0
-2.37000000000000E+0      0.00000000000000E+0      0.00000000000000E+0
0.00000000000000E+0      0.00000000000000E+0
   BmDistLoadG              6     189       Z       1    -2.37000000000000E+0
-2.37000000000000E+0      0.00000000000000E+0      0.00000000000000E+0
0.00000000000000E+0      0.00000000000000E+0
   BmDistLoadG              6     190       Z       1    -2.37000000000000E+0
-2.37000000000000E+0      0.00000000000000E+0      0.00000000000000E+0
0.00000000000000E+0      0.00000000000000E+0
   BmDistLoadG              6     191       Z       1    -2.37000000000000E+0
-2.37000000000000E+0      0.00000000000000E+0      0.00000000000000E+0
0.00000000000000E+0      0.00000000000000E+0
   BmDistLoadG              6     192       Z       1    -2.37000000000000E+0
-2.37000000000000E+0      0.00000000000000E+0      0.00000000000000E+0
0.00000000000000E+0      0.00000000000000E+0
   BmDistLoadG              6     193       Z       1    -2.37000000000000E+0
-2.37000000000000E+0      0.00000000000000E+0      0.00000000000000E+0
0.00000000000000E+0      0.00000000000000E+0
   BmDistLoadG              6     194       Z       1    -2.37000000000000E+0
-2.37000000000000E+0      0.00000000000000E+0      0.00000000000000E+0
0.00000000000000E+0      0.00000000000000E+0
   BmDistLoadG              6     195       Z       1    -2.37000000000000E+0
-2.37000000000000E+0      0.00000000000000E+0      0.00000000000000E+0
0.00000000000000E+0      0.00000000000000E+0
   BmDistLoadG              6     196       Z       1    -2.37000000000000E+0
-2.37000000000000E+0      0.00000000000000E+0      0.00000000000000E+0
0.00000000000000E+0      0.00000000000000E+0
   BmDistLoadG              6     197       Z       1    -2.37000000000000E+0
-2.37000000000000E+0      0.00000000000000E+0      0.00000000000000E+0
0.00000000000000E+0      0.00000000000000E+0
   BmDistLoadG              6     198       Z       1    -2.37000000000000E+0
-2.37000000000000E+0      0.00000000000000E+0      0.00000000000000E+0
0.00000000000000E+0      0.00000000000000E+0
   BmDistLoadG              6     199       Z       1    -2.37000000000000E+0
-2.37000000000000E+0      0.00000000000000E+0      0.00000000000000E+0
0.00000000000000E+0      0.00000000000000E+0
   BmDistLoadG              6     200       Z       1    -2.37000000000000E+0
-2.37000000000000E+0      0.00000000000000E+0      0.00000000000000E+0
0.00000000000000E+0      0.00000000000000E+0
   BmDistLoadG              6     201       Z       1    -2.37000000000000E+0
-2.37000000000000E+0      0.00000000000000E+0      0.00000000000000E+0
0.00000000000000E+0      0.00000000000000E+0
   BmDistLoadG              6     202       Z       1    -2.37000000000000E+0
-2.37000000000000E+0      0.00000000000000E+0      0.00000000000000E+0
0.00000000000000E+0      0.00000000000000E+0
```

```
   BmDistLoadG             6     203      Z       1    -2.37000000000000E+0
-2.37000000000000E+0      0.00000000000000E+0      0.00000000000000E+0
0.00000000000000E+0      0.00000000000000E+0
   BmDistLoadG             6     204      Z       1    -2.37000000000000E+0
-2.37000000000000E+0      0.00000000000000E+0      0.00000000000000E+0
0.00000000000000E+0      0.00000000000000E+0
   BmDistLoadG             6     205      Z       1    -2.37000000000000E+0
-2.37000000000000E+0      0.00000000000000E+0      0.00000000000000E+0
0.00000000000000E+0      0.00000000000000E+0
   BmDistLoadG             6     206      Z       1    -2.37000000000000E+0
-2.37000000000000E+0      0.00000000000000E+0      0.00000000000000E+0
0.00000000000000E+0      0.00000000000000E+0
   BmDistLoadG             6     207      Z       1    -2.37000000000000E+0
-2.37000000000000E+0      0.00000000000000E+0      0.00000000000000E+0
0.00000000000000E+0       0.00000000000000E+0
   BmDistLoadG             6     208      Z       1    -2.37000000000000E+0
-2.37000000000000E+0      0.00000000000000E+0      0.00000000000000E+0
0.00000000000000E+0      0.00000000000000E+0
   BmDistLoadG             6     209      Z       1    -2.37000000000000E+0
-2.37000000000000E+0      0.00000000000000E+0      0.00000000000000E+0
0.00000000000000E+0      0.00000000000000E+0
   BmDistLoadG             6     210      Z       1    -2.37000000000000E+0
-2.37000000000000E+0      0.00000000000000E+0      0.00000000000000E+0
0.00000000000000E+0      0.00000000000000E+0
   BmDistLoadG             6     211      Z       1    -2.37000000000000E+0
-2.37000000000000E+0      0.00000000000000E+0      0.00000000000000E+0
0.00000000000000E+0       0.00000000000000E+0
   BmDistLoadG             6     212      Z       1    -2.37000000000000E+0
-2.37000000000000E+0      0.00000000000000E+0      0.00000000000000E+0
0.00000000000000E+0      0.00000000000000E+0
   BmDistLoadG             6     213      Z       1    -2.37000000000000E+0
-2.37000000000000E+0      0.00000000000000E+0      0.00000000000000E+0
0.00000000000000E+0      0.00000000000000E+0
   BmDistLoadG             6     214      Z       1    -2.37000000000000E+0
-2.37000000000000E+0      0.00000000000000E+0      0.00000000000000E+0
0.00000000000000E+0      0.00000000000000E+0
   BmDistLoadG             6     215      Z       1    -2.37000000000000E+0
-2.37000000000000E+0      0.00000000000000E+0      0.00000000000000E+0
0.00000000000000E+0      0.00000000000000E+0
   BmDistLoadG             6     216      Z       1    -2.37000000000000E+0
-2.37000000000000E+0      0.00000000000000E+0      0.00000000000000E+0
0.00000000000000E+0      0.00000000000000E+0
   BmDistLoadG             6     217      Z       1    -2.37000000000000E+0
-2.37000000000000E+0      0.00000000000000E+0      0.00000000000000E+0
0.00000000000000E+0      0.00000000000000E+0
   BmDistLoadG             6     218      Z       1    -4.74000000000000E+0
-4.74000000000000E+0      0.00000000000000E+0      0.00000000000000E+0
0.00000000000000E+0      0.00000000000000E+0
   BmDistLoadG             6     219      Z       1    -4.74000000000000E+0
-4.74000000000000E+0      0.00000000000000E+0      0.00000000000000E+0
0.00000000000000E+0      0.00000000000000E+0
   BmDistLoadG             6     220      Z       1    -4.74000000000000E+0
-4.74000000000000E+0      0.00000000000000E+0      0.00000000000000E+0
0.00000000000000E+0      0.00000000000000E+0
```

```
   BmDistLoadG              6      221       Z       1    -4.74000000000000E+0
-4.74000000000000E+0      0.00000000000000E+0      0.00000000000000E+0
0.00000000000000E+0      0.00000000000000E+0
   BmDistLoadG              6      222       Z       1    -4.74000000000000E+0
-4.74000000000000E+0      0.00000000000000E+0      0.00000000000000E+0
0.00000000000000E+0      0.00000000000000E+0
   BmDistLoadG              6      223       Z       1    -4.74000000000000E+0
-4.74000000000000E+0      0.00000000000000E+0      0.00000000000000E+0
0.00000000000000E+0      0.00000000000000E+0
   BmDistLoadG              6      224       Z       1    -4.74000000000000E+0
-4.74000000000000E+0      0.00000000000000E+0      0.00000000000000E+0
0.00000000000000E+0      0.00000000000000E+0
   BmDistLoadG              6      225       Z       1    -4.74000000000000E+0
-4.74000000000000E+0      0.00000000000000E+0      0.00000000000000E+0
0.00000000000000E+0       0.00000000000000E+0
   BmDistLoadG              6      226       Z       1    -4.74000000000000E+0
-4.74000000000000E+0      0.00000000000000E+0      0.00000000000000E+0
0.00000000000000E+0      0.00000000000000E+0
   BmDistLoadG              6      227       Z       1    -4.74000000000000E+0
-4.74000000000000E+0      0.00000000000000E+0      0.00000000000000E+0
0.00000000000000E+0      0.00000000000000E+0
   BmDistLoadG              6      228       Z       1    -4.74000000000000E+0
-4.74000000000000E+0      0.00000000000000E+0      0.00000000000000E+0
0.00000000000000E+0      0.00000000000000E+0
   BmDistLoadG              6      229       Z       1    -4.74000000000000E+0
-4.74000000000000E+0      0.00000000000000E+0      0.00000000000000E+0
0.00000000000000E+0       0.00000000000000E+0
   BmDistLoadG              6      230       Z       1    -4.74000000000000E+0
-4.74000000000000E+0      0.00000000000000E+0      0.00000000000000E+0
0.00000000000000E+0      0.00000000000000E+0
   BmDistLoadG              6      231       Z       1    -4.74000000000000E+0
-4.74000000000000E+0      0.00000000000000E+0      0.00000000000000E+0
0.00000000000000E+0      0.00000000000000E+0
   BmDistLoadG              6      232       Z       1    -4.74000000000000E+0
-4.74000000000000E+0      0.00000000000000E+0      0.00000000000000E+0
0.00000000000000E+0      0.00000000000000E+0
   BmDistLoadG              6      233       Z       1    -4.74000000000000E+0
-4.74000000000000E+0      0.00000000000000E+0      0.00000000000000E+0
0.00000000000000E+0      0.00000000000000E+0
   BmDistLoadG              6      234       Z       1    -4.74000000000000E+0
-4.74000000000000E+0      0.00000000000000E+0      0.00000000000000E+0
0.00000000000000E+0      0.00000000000000E+0
   BmDistLoadG              6      235       Z       1    -4.74000000000000E+0
-4.74000000000000E+0      0.00000000000000E+0      0.00000000000000E+0
0.00000000000000E+0      0.00000000000000E+0
   BmDistLoadG              6      236       Z       1    -4.74000000000000E+0
-4.74000000000000E+0      0.00000000000000E+0      0.00000000000000E+0
0.00000000000000E+0      0.00000000000000E+0
   BmDistLoadG              6      237       Z       1    -4.74000000000000E+0
-4.74000000000000E+0      0.00000000000000E+0      0.00000000000000E+0
0.00000000000000E+0      0.00000000000000E+0
   BmDistLoadG              6      238       Z       1    -4.74000000000000E+0
-4.74000000000000E+0      0.00000000000000E+0      0.00000000000000E+0
0.00000000000000E+0      0.00000000000000E+0
```

```
   BmDistLoadG              6     239      Z      1    -4.74000000000000E+0
-4.74000000000000E+0      0.00000000000000E+0      0.00000000000000E+0
0.00000000000000E+0      0.00000000000000E+0
   BmDistLoadG              6     240      Z      1    -4.74000000000000E+0
-4.74000000000000E+0      0.00000000000000E+0      0.00000000000000E+0
0.00000000000000E+0      0.00000000000000E+0
   BmDistLoadG              6     241      Z      1    -4.74000000000000E+0
-4.74000000000000E+0      0.00000000000000E+0      0.00000000000000E+0
0.00000000000000E+0      0.00000000000000E+0
   BmDistLoadG              6     242      Z      1    -4.74000000000000E+0
-4.74000000000000E+0      0.00000000000000E+0      0.00000000000000E+0
0.00000000000000E+0      0.00000000000000E+0
   BmDistLoadG              6     243      Z      1    -4.74000000000000E+0
-4.74000000000000E+0      0.00000000000000E+0     0.00000000000000E+0
0.00000000000000E+0      0.00000000000000E+0
   BmDistLoadG              6     244      Z      1    -4.74000000000000E+0
-4.74000000000000E+0      0.00000000000000E+0      0.00000000000000E+0
0.00000000000000E+0      0.00000000000000E+0
   BmDistLoadG              6     245      Z      1    -4.74000000000000E+0
-4.74000000000000E+0      0.00000000000000E+0      0.00000000000000E+0
0.00000000000000E+0      0.00000000000000E+0
   BmDistLoadG              6     246      Z      1    -4.74000000000000E+0
-4.74000000000000E+0      0.00000000000000E+0      0.00000000000000E+0
0.00000000000000E+0      0.00000000000000E+0
   BmDistLoadG              6     247      Z      1    -4.74000000000000E+0
-4.74000000000000E+0      0.00000000000000E+0      0.00000000000000E+0
0.00000000000000E+0       0.00000000000000E+0
   BmDistLoadG              6     248      Z      1    -4.74000000000000E+0
-4.74000000000000E+0      0.00000000000000E+0      0.00000000000000E+0
0.00000000000000E+0      0.00000000000000E+0
   BmDistLoadG              6     249      Z      1    -4.74000000000000E+0
-4.74000000000000E+0      0.00000000000000E+0      0.00000000000000E+0
0.00000000000000E+0      0.00000000000000E+0
   BmDistLoadG              6     250      Z      1    -4.74000000000000E+0
-4.74000000000000E+0      0.00000000000000E+0      0.00000000000000E+0
0.00000000000000E+0      0.00000000000000E+0
   BmDistLoadG              6     251      Z      1    -4.74000000000000E+0
-4.74000000000000E+0      0.00000000000000E+0     0.00000000000000E+0
0.00000000000000E+0      0.00000000000000E+0
   BmDistLoadG              6     252      Z      1    -4.74000000000000E+0
-4.74000000000000E+0      0.00000000000000E+0      0.00000000000000E+0
0.00000000000000E+0      0.00000000000000E+0
   BmDistLoadG              6     253      Z      1    -4.74000000000000E+0
-4.74000000000000E+0      0.00000000000000E+0      0.00000000000000E+0
0.00000000000000E+0      0.00000000000000E+0
   BmDistLoadG              6     254      Z      1    -4.74000000000000E+0
-4.74000000000000E+0      0.00000000000000E+0      0.00000000000000E+0
0.00000000000000E+0      0.00000000000000E+0
   BmDistLoadG              6     255      Z      1    -4.74000000000000E+0
-4.74000000000000E+0      0.00000000000000E+0      0.00000000000000E+0
0.00000000000000E+0      0.00000000000000E+0
   BmDistLoadG              6     256      Z      1    -4.74000000000000E+0
-4.74000000000000E+0      0.00000000000000E+0      0.00000000000000E+0
0.00000000000000E+0      0.00000000000000E+0
```

```
   BmDistLoadG              6      257       Z       1    -4.74000000000000E+0
-4.74000000000000E+0      0.00000000000000E+0      0.00000000000000E+0
0.00000000000000E+0      0.00000000000000E+0
   BmDistLoadG              6      258       Z       1    -4.74000000000000E+0
-4.74000000000000E+0      0.00000000000000E+0      0.00000000000000E+0
0.00000000000000E+0      0.00000000000000E+0
   BmDistLoadG              6      259       Z       1    -4.74000000000000E+0
-4.74000000000000E+0      0.00000000000000E+0      0.00000000000000E+0
0.00000000000000E+0      0.00000000000000E+0
   BmDistLoadG              6      260       Z       1    -4.74000000000000E+0
-4.74000000000000E+0      0.00000000000000E+0      0.00000000000000E+0
0.00000000000000E+0      0.00000000000000E+0
   BmDistLoadG              6      261       Z       1    -4.74000000000000E+0
-4.74000000000000E+0      0.00000000000000E+0      0.00000000000000E+0
0.00000000000000E+0       0.00000000000000E+0
   BmDistLoadG              6      262       Z       1    -4.74000000000000E+0
-4.74000000000000E+0      0.00000000000000E+0      0.00000000000000E+0
0.00000000000000E+0      0.00000000000000E+0
   BmDistLoadG              6      263       Z       1    -4.74000000000000E+0
-4.74000000000000E+0      0.00000000000000E+0      0.00000000000000E+0
0.00000000000000E+0      0.00000000000000E+0
   BmDistLoadG              6      264       Z       1    -4.74000000000000E+0
-4.74000000000000E+0      0.00000000000000E+0      0.00000000000000E+0
0.00000000000000E+0      0.00000000000000E+0
   BmDistLoadG              6      265       Z       1    -4.74000000000000E+0
-4.74000000000000E+0      0.00000000000000E+0      0.00000000000000E+0
0.00000000000000E+0       0.00000000000000E+0
   BmDistLoadG              6      266       Z       1    -4.74000000000000E+0
-4.74000000000000E+0      0.00000000000000E+0      0.00000000000000E+0
0.00000000000000E+0      0.00000000000000E+0
   BmDistLoadG              6      267       Z       1    -4.74000000000000E+0
-4.74000000000000E+0      0.00000000000000E+0      0.00000000000000E+0
0.00000000000000E+0      0.00000000000000E+0
   BmDistLoadG              6      268       Z       1    -4.74000000000000E+0
-4.74000000000000E+0      0.00000000000000E+0      0.00000000000000E+0
0.00000000000000E+0      0.00000000000000E+0
   BmDistLoadG              6      269       Z       1    -4.74000000000000E+0
-4.74000000000000E+0      0.00000000000000E+0      0.00000000000000E+0
0.00000000000000E+0      0.00000000000000E+0
   BmDistLoadG              6      270       Z       1    -4.74000000000000E+0
-4.74000000000000E+0      0.00000000000000E+0      0.00000000000000E+0
0.00000000000000E+0      0.00000000000000E+0
   BmDistLoadG              6      271       Z       1    -4.74000000000000E+0
-4.74000000000000E+0      0.00000000000000E+0      0.00000000000000E+0
0.00000000000000E+0      0.00000000000000E+0
   BmDistLoadG              6      272       Z       1    -4.74000000000000E+0
-4.74000000000000E+0      0.00000000000000E+0      0.00000000000000E+0
0.00000000000000E+0      0.00000000000000E+0
   BmDistLoadG              6      273       Z       1    -4.74000000000000E+0
-4.74000000000000E+0      0.00000000000000E+0      0.00000000000000E+0
0.00000000000000E+0      0.00000000000000E+0
   BmDistLoadG              6      274       Z       1    -4.74000000000000E+0
-4.74000000000000E+0      0.00000000000000E+0      0.00000000000000E+0
0.00000000000000E+0      0.00000000000000E+0
```

```
   BmDistLoadG              6     275       Z       1    -4.74000000000000E+0
-4.74000000000000E+0      0.00000000000000E+0      0.00000000000000E+0
0.00000000000000E+0      0.00000000000000E+0
   BmDistLoadG              6     276       Z       1    -4.74000000000000E+0
-4.74000000000000E+0      0.00000000000000E+0      0.00000000000000E+0
0.00000000000000E+0      0.00000000000000E+0
   BmDistLoadG              6     277       Z       1    -4.74000000000000E+0
-4.74000000000000E+0      0.00000000000000E+0      0.00000000000000E+0
0.00000000000000E+0      0.00000000000000E+0
   BmDistLoadG              6     278       Z       1    -4.74000000000000E+0
-4.74000000000000E+0      0.00000000000000E+0      0.00000000000000E+0
0.00000000000000E+0      0.00000000000000E+0
   BmDistLoadG              6     279       Z       1    -4.74000000000000E+0
-4.74000000000000E+0      0.00000000000000E+0      0.00000000000000E+0
0.00000000000000E+0      0.00000000000000E+0
   BmDistLoadG              6     280       Z       1    -4.74000000000000E+0
-4.74000000000000E+0      0.00000000000000E+0      0.00000000000000E+0
0.00000000000000E+0      0.00000000000000E+0
   BmDistLoadG              6     281       Z       1    -4.74000000000000E+0
-4.74000000000000E+0      0.00000000000000E+0      0.00000000000000E+0
0.00000000000000E+0      0.00000000000000E+0
   BmDistLoadG              6     282       Z       1    -4.74000000000000E+0
-4.74000000000000E+0      0.00000000000000E+0      0.00000000000000E+0
0.00000000000000E+0      0.00000000000000E+0
   BmDistLoadG              6     283       Z       1    -4.74000000000000E+0
-4.74000000000000E+0      0.00000000000000E+0      0.00000000000000E+0
0.00000000000000E+0       0.00000000000000E+0
   BmDistLoadG              6     284       Z       1    -4.74000000000000E+0
-4.74000000000000E+0      0.00000000000000E+0      0.00000000000000E+0
0.00000000000000E+0      0.00000000000000E+0
   BmDistLoadG              6     285       Z       1    -4.74000000000000E+0
-4.74000000000000E+0      0.00000000000000E+0      0.00000000000000E+0
0.00000000000000E+0      0.00000000000000E+0
   BmDistLoadG              6     286       Z       1    -4.74000000000000E+0
-4.74000000000000E+0      0.00000000000000E+0      0.00000000000000E+0
0.00000000000000E+0      0.00000000000000E+0
   BmDistLoadG              6     287       Z       1    -4.74000000000000E+0
-4.74000000000000E+0      0.00000000000000E+0      0.00000000000000E+0
0.00000000000000E+0      0.00000000000000E+0
   BmDistLoadG              6     288       Z       1    -4.74000000000000E+0
-4.74000000000000E+0      0.00000000000000E+0      0.00000000000000E+0
0.00000000000000E+0      0.00000000000000E+0
   BmDistLoadG              6     289       Z       1    -4.74000000000000E+0
-4.74000000000000E+0      0.00000000000000E+0      0.00000000000000E+0
0.00000000000000E+0      0.00000000000000E+0
   BmDistLoadG              6     290       Z       1    -4.74000000000000E+0
-4.74000000000000E+0      0.00000000000000E+0      0.00000000000000E+0
0.00000000000000E+0      0.00000000000000E+0
   BmDistLoadG              6     291       Z       1    -4.74000000000000E+0
-4.74000000000000E+0      0.00000000000000E+0      0.00000000000000E+0
0.00000000000000E+0      0.00000000000000E+0
   BmDistLoadG              6     292       Z       1    -4.74000000000000E+0
-4.74000000000000E+0      0.00000000000000E+0      0.00000000000000E+0
0.00000000000000E+0      0.00000000000000E+0
```

```
   BmDistLoadG              6     293      Z      1    -4.74000000000000E+0
-4.74000000000000E+0      0.00000000000000E+0      0.00000000000000E+0
0.00000000000000E+0      0.00000000000000E+0
   BmDistLoadG              6     294      Z      1    -4.74000000000000E+0
-4.74000000000000E+0      0.00000000000000E+0      0.00000000000000E+0
0.00000000000000E+0      0.00000000000000E+0
   BmDistLoadG              6     295      Z      1    -4.74000000000000E+0
-4.74000000000000E+0      0.00000000000000E+0      0.00000000000000E+0
0.00000000000000E+0      0.00000000000000E+0
   BmDistLoadG              6     296      Z      1    -4.74000000000000E+0
-4.74000000000000E+0      0.00000000000000E+0      0.00000000000000E+0
0.00000000000000E+0      0.00000000000000E+0
   BmDistLoadG              6     297      Z      1    -4.74000000000000E+0
-4.74000000000000E+0      0.00000000000000E+0      0.00000000000000E+0
0.00000000000000E+0      0.00000000000000E+0
   BmDistLoadG              6     298      Z      1    -4.74000000000000E+0
-4.74000000000000E+0      0.00000000000000E+0      0.00000000000000E+0
0.00000000000000E+0      0.00000000000000E+0
   BmDistLoadG              6     299      Z      1    -4.74000000000000E+0
-4.74000000000000E+0      0.00000000000000E+0      0.00000000000000E+0
0.00000000000000E+0      0.00000000000000E+0
   BmDistLoadG              6     300      Z      1    -4.74000000000000E+0
-4.74000000000000E+0      0.00000000000000E+0      0.00000000000000E+0
0.00000000000000E+0      0.00000000000000E+0
   BmDistLoadG              6     301      Z      1    -4.74000000000000E+0
-4.74000000000000E+0      0.00000000000000E+0      0.00000000000000E+0
0.00000000000000E+0       0.00000000000000E+0
   BmDistLoadG              6     302      Z      1    -4.74000000000000E+0
-4.74000000000000E+0      0.00000000000000E+0      0.00000000000000E+0
0.00000000000000E+0      0.00000000000000E+0
   BmDistLoadG              6     303      Z      1    -4.74000000000000E+0
-4.74000000000000E+0      0.00000000000000E+0      0.00000000000000E+0
0.00000000000000E+0      0.00000000000000E+0
   BmDistLoadG              6     304      Z      1    -4.74000000000000E+0
-4.74000000000000E+0      0.00000000000000E+0      0.00000000000000E+0
0.00000000000000E+0      0.00000000000000E+0
   BmDistLoadG              6     305      Z      1    -4.74000000000000E+0
-4.74000000000000E+0      0.00000000000000E+0      0.00000000000000E+0
0.00000000000000E+0      0.00000000000000E+0
   BmDistLoadG              6     306      Z      1    -4.74000000000000E+0
-4.74000000000000E+0      0.00000000000000E+0      0.00000000000000E+0
0.00000000000000E+0      0.00000000000000E+0
   BmDistLoadG              6     307      Z      1    -4.74000000000000E+0
-4.74000000000000E+0      0.00000000000000E+0      0.00000000000000E+0
0.00000000000000E+0      0.00000000000000E+0
   BmDistLoadG              6     308      Z      1    -4.74000000000000E+0
-4.74000000000000E+0      0.00000000000000E+0      0.00000000000000E+0
0.00000000000000E+0      0.00000000000000E+0
   BmDistLoadG              6     309      Z      1    -4.74000000000000E+0
-4.74000000000000E+0      0.00000000000000E+0      0.00000000000000E+0
0.00000000000000E+0      0.00000000000000E+0
   BmDistLoadG              6     310      Z      1    -4.74000000000000E+0
-4.74000000000000E+0      0.00000000000000E+0      0.00000000000000E+0
0.00000000000000E+0      0.00000000000000E+0
```

```
   BmDistLoadG              6     311      Z      1    -4.74000000000000E+0
-4.74000000000000E+0      0.00000000000000E+0      0.00000000000000E+0
0.00000000000000E+0      0.00000000000000E+0
   BmDistLoadG              6     312      Z      1    -4.74000000000000E+0
-4.74000000000000E+0      0.00000000000000E+0      0.00000000000000E+0
0.00000000000000E+0      0.00000000000000E+0
   BmDistLoadG              6     313      Z      1    -4.74000000000000E+0
-4.74000000000000E+0      0.00000000000000E+0      0.00000000000000E+0
0.00000000000000E+0      0.00000000000000E+0
   BmDistLoadG              6     314      Z      1    -4.74000000000000E+0
-4.74000000000000E+0      0.00000000000000E+0      0.00000000000000E+0
0.00000000000000E+0      0.00000000000000E+0
   BmDistLoadG              6     315      Z      1    -4.74000000000000E+0
-4.74000000000000E+0      0.00000000000000E+0      0.00000000000000E+0
0.00000000000000E+0      0.00000000000000E+0
   BmDistLoadG              6     316      Z      1    -4.74000000000000E+0
-4.74000000000000E+0      0.00000000000000E+0      0.00000000000000E+0
0.00000000000000E+0      0.00000000000000E+0
   BmDistLoadG              6     317      Z      1    -4.74000000000000E+0
-4.74000000000000E+0      0.00000000000000E+0      0.00000000000000E+0
0.00000000000000E+0      0.00000000000000E+0
   BmDistLoadG              6     318      Z      1    -4.74000000000000E+0
-4.74000000000000E+0      0.00000000000000E+0      0.00000000000000E+0
0.00000000000000E+0      0.00000000000000E+0
   BmDistLoadG              6     319      Z      1    -4.74000000000000E+0
-4.74000000000000E+0      0.00000000000000E+0      0.00000000000000E+0
0.00000000000000E+0       0.00000000000000E+0
   BmDistLoadG              6     320      Z      1    -4.74000000000000E+0
-4.74000000000000E+0      0.00000000000000E+0      0.00000000000000E+0
0.00000000000000E+0      0.00000000000000E+0
   BmDistLoadG              6     321      Z      1    -4.74000000000000E+0
-4.74000000000000E+0      0.00000000000000E+0      0.00000000000000E+0
0.00000000000000E+0      0.00000000000000E+0
   BmDistLoadG              6     322      Z      1    -4.74000000000000E+0
-4.74000000000000E+0      0.00000000000000E+0      0.00000000000000E+0
0.00000000000000E+0      0.00000000000000E+0
   BmDistLoadG              6     323      Z      1    -4.74000000000000E+0
-4.74000000000000E+0      0.00000000000000E+0      0.00000000000000E+0
0.00000000000000E+0      0.00000000000000E+0
   BmDistLoadG              6     324      Z      1    -4.74000000000000E+0
-4.74000000000000E+0      0.00000000000000E+0      0.00000000000000E+0
0.00000000000000E+0      0.00000000000000E+0
   BmDistLoadG              6     325      Z      1    -4.74000000000000E+0
-4.74000000000000E+0      0.00000000000000E+0      0.00000000000000E+0
0.00000000000000E+0      0.00000000000000E+0
   BmDistLoadG              6     326      Z      1    -4.74000000000000E+0
-4.74000000000000E+0      0.00000000000000E+0      0.00000000000000E+0
0.00000000000000E+0      0.00000000000000E+0
   BmDistLoadG              6     327      Z      1    -4.74000000000000E+0
-4.74000000000000E+0      0.00000000000000E+0      0.00000000000000E+0
0.00000000000000E+0      0.00000000000000E+0
   BmDistLoadG              6     328      Z      1    -4.74000000000000E+0
-4.74000000000000E+0      0.00000000000000E+0      0.00000000000000E+0
0.00000000000000E+0      0.00000000000000E+0
```

```
   BmDistLoadG              6     329      Z      1    -4.74000000000000E+0
-4.74000000000000E+0      0.00000000000000E+0      0.00000000000000E+0
0.00000000000000E+0      0.00000000000000E+0
   BmDistLoadG              6     330      Z      1    -4.74000000000000E+0
-4.74000000000000E+0      0.00000000000000E+0      0.00000000000000E+0
0.00000000000000E+0      0.00000000000000E+0
   BmDistLoadG              6     331      Z      1    -4.74000000000000E+0
-4.74000000000000E+0      0.00000000000000E+0      0.00000000000000E+0
0.00000000000000E+0      0.00000000000000E+0
   BmDistLoadG              6     332      Z      1    -4.74000000000000E+0
-4.74000000000000E+0      0.00000000000000E+0      0.00000000000000E+0
0.00000000000000E+0      0.00000000000000E+0
   BmDistLoadG              6     333      Z      1    -4.74000000000000E+0
-4.74000000000000E+0      0.00000000000000E+0      0.00000000000000E+0
0.00000000000000E+0      0.00000000000000E+0
   BmDistLoadG              6     334      Z      1    -4.74000000000000E+0
-4.74000000000000E+0      0.00000000000000E+0      0.00000000000000E+0
0.00000000000000E+0      0.00000000000000E+0
   BmDistLoadG              6     335      Z      1    -4.74000000000000E+0
-4.74000000000000E+0      0.00000000000000E+0      0.00000000000000E+0
0.00000000000000E+0      0.00000000000000E+0
   BmDistLoadG              6     336      Z      1    -4.74000000000000E+0
-4.74000000000000E+0      0.00000000000000E+0      0.00000000000000E+0
0.00000000000000E+0      0.00000000000000E+0
   BmDistLoadG              6     337      Z      1    -4.74000000000000E+0
-4.74000000000000E+0      0.00000000000000E+0      0.00000000000000E+0
0.00000000000000E+0       0.00000000000000E+0
   BmDistLoadG              6     338      Z      1    -4.74000000000000E+0
-4.74000000000000E+0      0.00000000000000E+0      0.00000000000000E+0
0.00000000000000E+0      0.00000000000000E+0
   BmDistLoadG              6     339      Z      1    -4.74000000000000E+0
-4.74000000000000E+0      0.00000000000000E+0      0.00000000000000E+0
0.00000000000000E+0      0.00000000000000E+0
   BmDistLoadG              6     340      Z      1    -4.74000000000000E+0
-4.74000000000000E+0      0.00000000000000E+0      0.00000000000000E+0
0.00000000000000E+0      0.00000000000000E+0
   BmDistLoadG              6     341      Z      1    -4.74000000000000E+0
-4.74000000000000E+0      0.00000000000000E+0      0.00000000000000E+0
0.00000000000000E+0      0.00000000000000E+0
   BmDistLoadG              6     342      Z      1    -4.74000000000000E+0
-4.74000000000000E+0      0.00000000000000E+0      0.00000000000000E+0
0.00000000000000E+0      0.00000000000000E+0
   BmDistLoadG              6     343      Z      1    -4.74000000000000E+0
-4.74000000000000E+0      0.00000000000000E+0      0.00000000000000E+0
0.00000000000000E+0      0.00000000000000E+0
   BmDistLoadG              6     344      Z      1    -4.74000000000000E+0
-4.74000000000000E+0      0.00000000000000E+0      0.00000000000000E+0
0.00000000000000E+0      0.00000000000000E+0
   BmDistLoadG              6     345      Z      1    -4.74000000000000E+0
-4.74000000000000E+0      0.00000000000000E+0      0.00000000000000E+0
0.00000000000000E+0      0.00000000000000E+0
   BmDistLoadG              6     346      Z      1    -4.74000000000000E+0
-4.74000000000000E+0      0.00000000000000E+0      0.00000000000000E+0
0.00000000000000E+0      0.00000000000000E+0
```

```
   BmDistLoadG              6     347       Z       1    -4.74000000000000E+0
-4.74000000000000E+0      0.00000000000000E+0      0.00000000000000E+0
0.00000000000000E+0      0.00000000000000E+0
   BmDistLoadG              6     348       Z       1    -4.74000000000000E+0
-4.74000000000000E+0      0.00000000000000E+0      0.00000000000000E+0
0.00000000000000E+0      0.00000000000000E+0
   BmDistLoadG              6     349       Z       1    -4.74000000000000E+0
-4.74000000000000E+0      0.00000000000000E+0      0.00000000000000E+0
0.00000000000000E+0      0.00000000000000E+0
   BmDistLoadG              6     350       Z       1    -4.74000000000000E+0
-4.74000000000000E+0      0.00000000000000E+0      0.00000000000000E+0
0.00000000000000E+0      0.00000000000000E+0
   BmDistLoadG              6     351       Z       1    -4.74000000000000E+0
-4.74000000000000E+0      0.00000000000000E+0      0.00000000000000E+0
0.00000000000000E+0      0.00000000000000E+0
   BmDistLoadG              6     352       Z       1    -4.74000000000000E+0
-4.74000000000000E+0      0.00000000000000E+0      0.00000000000000E+0
0.00000000000000E+0      0.00000000000000E+0
   BmDistLoadG              6     353       Z       1    -4.74000000000000E+0
-4.74000000000000E+0      0.00000000000000E+0      0.00000000000000E+0
0.00000000000000E+0      0.00000000000000E+0
   BmDistLoadG              6     354       Z       1    -4.74000000000000E+0
-4.74000000000000E+0      0.00000000000000E+0      0.00000000000000E+0
0.00000000000000E+0      0.00000000000000E+0
   BmDistLoadG              6     355       Z       1    -4.74000000000000E+0
-4.74000000000000E+0      0.00000000000000E+0      0.00000000000000E+0
0.00000000000000E+0       0.00000000000000E+0
   BmDistLoadG              6     356       Z       1    -4.74000000000000E+0
-4.74000000000000E+0      0.00000000000000E+0      0.00000000000000E+0
0.00000000000000E+0      0.00000000000000E+0
   BmDistLoadG              6     357       Z       1    -4.74000000000000E+0
-4.74000000000000E+0      0.00000000000000E+0      0.00000000000000E+0
0.00000000000000E+0      0.00000000000000E+0
   BmDistLoadG              6     358       Z       1    -4.74000000000000E+0
-4.74000000000000E+0      0.00000000000000E+0      0.00000000000000E+0
0.00000000000000E+0      0.00000000000000E+0
   BmDistLoadG              6     359       Z       1    -4.74000000000000E+0
-4.74000000000000E+0      0.00000000000000E+0     0.00000000000000E+0
0.00000000000000E+0      0.00000000000000E+0
   BmDistLoadG              6     360       Z       1    -4.74000000000000E+0
-4.74000000000000E+0      0.00000000000000E+0      0.00000000000000E+0
0.00000000000000E+0      0.00000000000000E+0
   BmDistLoadG              6     361       Z       1    -4.74000000000000E+0
-4.74000000000000E+0      0.00000000000000E+0      0.00000000000000E+0
0.00000000000000E+0      0.00000000000000E+0
   BmDistLoadG              6     362       Z       1    -4.74000000000000E+0
-4.74000000000000E+0      0.00000000000000E+0      0.00000000000000E+0
0.00000000000000E+0      0.00000000000000E+0
   BmDistLoadG              6     363       Z       1    -4.74000000000000E+0
-4.74000000000000E+0      0.00000000000000E+0      0.00000000000000E+0
0.00000000000000E+0      0.00000000000000E+0
   BmDistLoadG              6     364       Z       1    -4.74000000000000E+0
-4.74000000000000E+0      0.00000000000000E+0      0.00000000000000E+0
0.00000000000000E+0      0.00000000000000E+0
```

```
   BmDistLoadG              6     365      Z      1    -4.74000000000000E+0
-4.74000000000000E+0      0.00000000000000E+0      0.00000000000000E+0
0.00000000000000E+0      0.00000000000000E+0
   BmDistLoadG              6     366      Z      1    -4.74000000000000E+0
-4.74000000000000E+0      0.00000000000000E+0      0.00000000000000E+0
0.00000000000000E+0      0.00000000000000E+0
   BmDistLoadG              6     367      Z      1    -4.74000000000000E+0
-4.74000000000000E+0      0.00000000000000E+0      0.00000000000000E+0
0.00000000000000E+0      0.00000000000000E+0
   BmDistLoadG              6     368      Z      1    -4.74000000000000E+0
-4.74000000000000E+0      0.00000000000000E+0      0.00000000000000E+0
0.00000000000000E+0      0.00000000000000E+0
   BmDistLoadG              6     369      Z      1    -4.74000000000000E+0
-4.74000000000000E+0      0.00000000000000E+0      0.00000000000000E+0
0.00000000000000E+0      0.00000000000000E+0
   BmDistLoadG              6     370      Z      1    -4.74000000000000E+0
-4.74000000000000E+0      0.00000000000000E+0      0.00000000000000E+0
0.00000000000000E+0      0.00000000000000E+0
   BmDistLoadG              6     371      Z      1    -4.74000000000000E+0
-4.74000000000000E+0      0.00000000000000E+0      0.00000000000000E+0
0.00000000000000E+0      0.00000000000000E+0
   BmDistLoadG              6     372      Z      1    -4.74000000000000E+0
-4.74000000000000E+0      0.00000000000000E+0      0.00000000000000E+0
0.00000000000000E+0      0.00000000000000E+0
   BmDistLoadG              6     373      Z      1    -4.74000000000000E+0
-4.74000000000000E+0      0.00000000000000E+0      0.00000000000000E+0
0.00000000000000E+0       0.00000000000000E+0
   BmDistLoadG              6     374      Z      1    -4.74000000000000E+0
-4.74000000000000E+0      0.00000000000000E+0      0.00000000000000E+0
0.00000000000000E+0      0.00000000000000E+0
   BmDistLoadG              6     375      Z      1    -4.74000000000000E+0
-4.74000000000000E+0      0.00000000000000E+0      0.00000000000000E+0
0.00000000000000E+0      0.00000000000000E+0
   BmDistLoadG              6     376      Z      1    -4.74000000000000E+0
-4.74000000000000E+0      0.00000000000000E+0      0.00000000000000E+0
0.00000000000000E+0      0.00000000000000E+0
   BmDistLoadG              6     377      Z      1    -4.74000000000000E+0
-4.74000000000000E+0      0.00000000000000E+0      0.00000000000000E+0
0.00000000000000E+0      0.00000000000000E+0
   BmDistLoadG              6     378      Z      1    -4.74000000000000E+0
-4.74000000000000E+0      0.00000000000000E+0      0.00000000000000E+0
0.00000000000000E+0      0.00000000000000E+0
   BmDistLoadG              6     379      Z      1    -4.74000000000000E+0
-4.74000000000000E+0      0.00000000000000E+0      0.00000000000000E+0
0.00000000000000E+0      0.00000000000000E+0
   BmDistLoadG              6     380      Z      1    -4.74000000000000E+0
-4.74000000000000E+0      0.00000000000000E+0      0.00000000000000E+0
0.00000000000000E+0      0.00000000000000E+0
   BmDistLoadG              6     381      Z      1    -4.74000000000000E+0
-4.74000000000000E+0      0.00000000000000E+0      0.00000000000000E+0
0.00000000000000E+0      0.00000000000000E+0
   BmDistLoadG              6     382      Z      1    -4.74000000000000E+0
-4.74000000000000E+0      0.00000000000000E+0      0.00000000000000E+0
0.00000000000000E+0      0.00000000000000E+0
```

```
   BmDistLoadG              6     383      Z      1    -4.74000000000000E+0
-4.74000000000000E+0      0.00000000000000E+0      0.00000000000000E+0
0.00000000000000E+0      0.00000000000000E+0
   BmDistLoadG              6     384      Z      1    -4.74000000000000E+0
-4.74000000000000E+0      0.00000000000000E+0      0.00000000000000E+0
0.00000000000000E+0      0.00000000000000E+0
   BmDistLoadG              6     385      Z      1    -4.74000000000000E+0
-4.74000000000000E+0      0.00000000000000E+0      0.00000000000000E+0
0.00000000000000E+0      0.00000000000000E+0
   BmDistLoadG              6     386      Z      1    -4.74000000000000E+0
-4.74000000000000E+0      0.00000000000000E+0      0.00000000000000E+0
0.00000000000000E+0      0.00000000000000E+0
   BmDistLoadG              6     387      Z      1    -4.74000000000000E+0
-4.74000000000000E+0      0.00000000000000E+0      0.00000000000000E+0
0.00000000000000E+0      0.00000000000000E+0
   BmDistLoadG              6     388      Z      1    -4.74000000000000E+0
-4.74000000000000E+0      0.00000000000000E+0      0.00000000000000E+0
0.00000000000000E+0      0.00000000000000E+0
   BmDistLoadG              6     389      Z      1    -4.74000000000000E+0
-4.74000000000000E+0      0.00000000000000E+0      0.00000000000000E+0
0.00000000000000E+0      0.00000000000000E+0
   BmDistLoadG              6     390      Z      1    -4.74000000000000E+0
-4.74000000000000E+0      0.00000000000000E+0      0.00000000000000E+0
0.00000000000000E+0      0.00000000000000E+0
   BmDistLoadG              6     391      Z      1    -4.74000000000000E+0
-4.74000000000000E+0      0.00000000000000E+0      0.00000000000000E+0
0.00000000000000E+0       0.00000000000000E+0
   BmDistLoadG              6     392      Z      1    -4.74000000000000E+0
-4.74000000000000E+0      0.00000000000000E+0      0.00000000000000E+0
0.00000000000000E+0      0.00000000000000E+0
   BmDistLoadG              6     393      Z      1    -4.74000000000000E+0
-4.74000000000000E+0      0.00000000000000E+0      0.00000000000000E+0
0.00000000000000E+0      0.00000000000000E+0
   BmDistLoadG              6     394      Z      1    -4.74000000000000E+0
-4.74000000000000E+0      0.00000000000000E+0      0.00000000000000E+0
0.00000000000000E+0      0.00000000000000E+0
   BmDistLoadG              6     395      Z      1    -4.74000000000000E+0
-4.74000000000000E+0      0.00000000000000E+0      0.00000000000000E+0
0.00000000000000E+0      0.00000000000000E+0
   BmDistLoadG              6     396      Z      1    -4.74000000000000E+0
-4.74000000000000E+0      0.00000000000000E+0      0.00000000000000E+0
0.00000000000000E+0      0.00000000000000E+0
   BmDistLoadG              6     397      Z      1    -4.74000000000000E+0
-4.74000000000000E+0      0.00000000000000E+0      0.00000000000000E+0
0.00000000000000E+0      0.00000000000000E+0
   BmDistLoadG              6     398      Z      1    -4.74000000000000E+0
-4.74000000000000E+0      0.00000000000000E+0      0.00000000000000E+0
0.00000000000000E+0      0.00000000000000E+0
   BmDistLoadG              6     399      Z      1    -4.74000000000000E+0
-4.74000000000000E+0      0.00000000000000E+0      0.00000000000000E+0
0.00000000000000E+0      0.00000000000000E+0
   BmDistLoadG              6     400      Z      1    -4.74000000000000E+0
-4.74000000000000E+0      0.00000000000000E+0      0.00000000000000E+0
0.00000000000000E+0      0.00000000000000E+0
```

```
   BmDistLoadG              6     401      Z      1    -4.74000000000000E+0
-4.74000000000000E+0      0.00000000000000E+0      0.00000000000000E+0
0.00000000000000E+0      0.00000000000000E+0
   BmDistLoadG              6     402      Z      1    -4.74000000000000E+0
-4.74000000000000E+0      0.00000000000000E+0      0.00000000000000E+0
0.00000000000000E+0      0.00000000000000E+0
   BmDistLoadG              6     403      Z      1    -4.74000000000000E+0
-4.74000000000000E+0      0.00000000000000E+0      0.00000000000000E+0
0.00000000000000E+0      0.00000000000000E+0
   BmDistLoadG              6     404      Z      1    -4.74000000000000E+0
-4.74000000000000E+0      0.00000000000000E+0      0.00000000000000E+0
0.00000000000000E+0      0.00000000000000E+0
   BmDistLoadG              6     405      Z      1    -4.74000000000000E+0
-4.74000000000000E+0      0.00000000000000E+0      0.00000000000000E+0
0.00000000000000E+0      0.00000000000000E+0
   BmDistLoadG              6     406      Z      1    -4.74000000000000E+0
-4.74000000000000E+0      0.00000000000000E+0      0.00000000000000E+0
0.00000000000000E+0      0.00000000000000E+0
   BmDistLoadG              6     407      Z      1    -4.74000000000000E+0
-4.74000000000000E+0      0.00000000000000E+0      0.00000000000000E+0
0.00000000000000E+0      0.00000000000000E+0
   BmDistLoadG              6     408      Z      1    -4.74000000000000E+0
-4.74000000000000E+0      0.00000000000000E+0      0.00000000000000E+0
0.00000000000000E+0      0.00000000000000E+0
   BmDistLoadG              6     409      Z      1    -4.74000000000000E+0
-4.74000000000000E+0      0.00000000000000E+0      0.00000000000000E+0
0.00000000000000E+0       0.00000000000000E+0
   BmDistLoadG              6     410      Z      1    -4.74000000000000E+0
-4.74000000000000E+0      0.00000000000000E+0      0.00000000000000E+0
0.00000000000000E+0      0.00000000000000E+0
   BmDistLoadG              6     411      Z      1    -4.74000000000000E+0
-4.74000000000000E+0      0.00000000000000E+0      0.00000000000000E+0
0.00000000000000E+0      0.00000000000000E+0
   BmDistLoadG              6     412      Z      1    -4.74000000000000E+0
-4.74000000000000E+0      0.00000000000000E+0      0.00000000000000E+0
0.00000000000000E+0      0.00000000000000E+0
   BmDistLoadG              6     413      Z      1    -4.74000000000000E+0
-4.74000000000000E+0      0.00000000000000E+0      0.00000000000000E+0
0.00000000000000E+0      0.00000000000000E+0
   BmDistLoadG              6     414      Z      1    -4.74000000000000E+0
-4.74000000000000E+0      0.00000000000000E+0      0.00000000000000E+0
0.00000000000000E+0      0.00000000000000E+0
   BmDistLoadG              6     415      Z      1    -4.74000000000000E+0
-4.74000000000000E+0      0.00000000000000E+0      0.00000000000000E+0
0.00000000000000E+0      0.00000000000000E+0
   BmDistLoadG              6     416      Z      1    -4.74000000000000E+0
-4.74000000000000E+0      0.00000000000000E+0      0.00000000000000E+0
0.00000000000000E+0      0.00000000000000E+0
   BmDistLoadG              6     417      Z      1    -4.74000000000000E+0
-4.74000000000000E+0      0.00000000000000E+0      0.00000000000000E+0
0.00000000000000E+0      0.00000000000000E+0
   BmDistLoadG              6     418      Z      1    -4.74000000000000E+0
-4.74000000000000E+0      0.00000000000000E+0      0.00000000000000E+0
0.00000000000000E+0      0.00000000000000E+0
```

```
   BmDistLoadG              6     419        Z      1    -4.74000000000000E+0
-4.74000000000000E+0      0.00000000000000E+0      0.00000000000000E+0
0.00000000000000E+0      0.00000000000000E+0
   BmDistLoadG              6     420        Z      1    -4.74000000000000E+0
-4.74000000000000E+0      0.00000000000000E+0      0.00000000000000E+0
0.00000000000000E+0      0.00000000000000E+0
   BmDistLoadG              6     421        Z      1    -4.74000000000000E+0
-4.74000000000000E+0      0.00000000000000E+0      0.00000000000000E+0
0.00000000000000E+0      0.00000000000000E+0
   BmDistLoadG              6     422        Z      1    -4.74000000000000E+0
-4.74000000000000E+0      0.00000000000000E+0      0.00000000000000E+0
0.00000000000000E+0      0.00000000000000E+0
   BmDistLoadG              6     423        Z      1    -4.74000000000000E+0
-4.74000000000000E+0      0.00000000000000E+0      0.00000000000000E+0
0.00000000000000E+0      0.00000000000000E+0
   BmDistLoadG              6     424        Z      1    -4.74000000000000E+0
-4.74000000000000E+0      0.00000000000000E+0      0.00000000000000E+0
0.00000000000000E+0      0.00000000000000E+0
   BmDistLoadG              6     425        Z      1    -4.74000000000000E+0
-4.74000000000000E+0      0.00000000000000E+0      0.00000000000000E+0
0.00000000000000E+0      0.00000000000000E+0
   BmDistLoadG              6     426        Z      1    -4.74000000000000E+0
-4.74000000000000E+0      0.00000000000000E+0      0.00000000000000E+0
0.00000000000000E+0      0.00000000000000E+0
   BmDistLoadG              6     427        Z      1    -4.74000000000000E+0
-4.74000000000000E+0      0.00000000000000E+0      0.00000000000000E+0
0.00000000000000E+0       0.00000000000000E+0
   BmDistLoadG              6     428        Z      1    -4.74000000000000E+0
-4.74000000000000E+0      0.00000000000000E+0      0.00000000000000E+0
0.00000000000000E+0      0.00000000000000E+0
   BmDistLoadG              6     429        Z      1    -4.74000000000000E+0
-4.74000000000000E+0      0.00000000000000E+0      0.00000000000000E+0
0.00000000000000E+0      0.00000000000000E+0
   BmDistLoadG              6     430        Z      1    -4.74000000000000E+0
-4.74000000000000E+0      0.00000000000000E+0      0.00000000000000E+0
0.00000000000000E+0      0.00000000000000E+0
   BmDistLoadG              6     431        Z      1    -4.74000000000000E+0
-4.74000000000000E+0      0.00000000000000E+0      0.00000000000000E+0
0.00000000000000E+0      0.00000000000000E+0
   BmDistLoadG              6     432        Z      1    -4.74000000000000E+0
-4.74000000000000E+0      0.00000000000000E+0      0.00000000000000E+0
0.00000000000000E+0      0.00000000000000E+0
   BmDistLoadG              6     433        Z      1    -4.74000000000000E+0
-4.74000000000000E+0      0.00000000000000E+0      0.00000000000000E+0
0.00000000000000E+0      0.00000000000000E+0
   BmDistLoadG              6     649        Z      1    -2.37000000000000E+0
-2.37000000000000E+0      0.00000000000000E+0      0.00000000000000E+0
0.00000000000000E+0      0.00000000000000E+0
   BmDistLoadG              6     650        Z      1    -2.37000000000000E+0
-2.37000000000000E+0      0.00000000000000E+0      0.00000000000000E+0
0.00000000000000E+0      0.00000000000000E+0
   BmDistLoadG              6     651        Z      1    -2.37000000000000E+0
-2.37000000000000E+0      0.00000000000000E+0      0.00000000000000E+0
0.00000000000000E+0      0.00000000000000E+0
```

```
   BmDistLoadG              6     652      Z      1    -2.37000000000000E+0
-2.37000000000000E+0      0.00000000000000E+0      0.00000000000000E+0
0.00000000000000E+0      0.00000000000000E+0
   BmDistLoadG              6     653      Z      1    -4.74000000000000E+0
-4.74000000000000E+0      0.00000000000000E+0      0.00000000000000E+0
0.00000000000000E+0      0.00000000000000E+0
   BmDistLoadG              6     654      Z      1    -4.74000000000000E+0
-4.74000000000000E+0      0.00000000000000E+0      0.00000000000000E+0
0.00000000000000E+0      0.00000000000000E+0
   BmDistLoadG              6     655      Z      1    -4.74000000000000E+0
-4.74000000000000E+0      0.00000000000000E+0      0.00000000000000E+0
0.00000000000000E+0      0.00000000000000E+0
   BmDistLoadG              6     656      Z      1    -4.74000000000000E+0
-4.74000000000000E+0      0.00000000000000E+0      0.00000000000000E+0
0.00000000000000E+0      0.00000000000000E+0
   BmDistLoadG              6     657      Z      1    -4.74000000000000E+0
-4.74000000000000E+0      0.00000000000000E+0      0.00000000000000E+0
0.00000000000000E+0      0.00000000000000E+0
   BmDistLoadG              6     658      Z      1    -4.74000000000000E+0
-4.74000000000000E+0      0.00000000000000E+0      0.00000000000000E+0
0.00000000000000E+0      0.00000000000000E+0
   BmDistLoadG              6     659      Z      1    -4.74000000000000E+0
-4.74000000000000E+0      0.00000000000000E+0      0.00000000000000E+0
0.00000000000000E+0      0.00000000000000E+0
   BmDistLoadG              6     660      Z      1    -4.74000000000000E+0
-4.74000000000000E+0      0.00000000000000E+0      0.00000000000000E+0
0.00000000000000E+0      0.00000000000000E+0
   BmDistLoadG              6     661      Z      1    -4.74000000000000E+0
-4.74000000000000E+0      0.00000000000000E+0      0.00000000000000E+0
0.00000000000000E+0      0.00000000000000E+0
   BmDistLoadG              6     662      Z      1    -4.74000000000000E+0
-4.74000000000000E+0      0.00000000000000E+0      0.00000000000000E+0
0.00000000000000E+0      0.00000000000000E+0
   BmDistLoadG              6     663      Z      1    -4.74000000000000E+0
-4.74000000000000E+0      0.00000000000000E+0      0.00000000000000E+0
0.00000000000000E+0      0.00000000000000E+0
   BmDistLoadG              6     664      Z      1    -4.74000000000000E+0
-4.74000000000000E+0      0.00000000000000E+0      0.00000000000000E+0
0.00000000000000E+0      0.00000000000000E+0
   BmDistLoadG              6     665      Z      1    -4.74000000000000E+0
-4.74000000000000E+0      0.00000000000000E+0      0.00000000000000E+0
0.00000000000000E+0      0.00000000000000E+0
   BmDistLoadG              6     666      Z      1    -4.74000000000000E+0
-4.74000000000000E+0      0.00000000000000E+0      0.00000000000000E+0
0.00000000000000E+0      0.00000000000000E+0
   BmDistLoadG              6     667      Z      1    -4.74000000000000E+0
-4.74000000000000E+0      0.00000000000000E+0      0.00000000000000E+0
0.00000000000000E+0      0.00000000000000E+0
   BmDistLoadG              6     668      Z      1    -4.74000000000000E+0
-4.74000000000000E+0      0.00000000000000E+0      0.00000000000000E+0
0.00000000000000E+0      0.00000000000000E+0

/ ______________________________________________________________________________
/ BEAM GLOBAL DISTRIBUTED LOADS
```

/ Q02a - Carico Vento Y+
BmDistLoadG 7 1 Y 1 1.76000000000000E+0
1.76000000000000E+0 0.00000000000000E+0 0.00000000000000E+0
0.00000000000000E+0 0.00000000000000E+0
BmDistLoadG 7 2 Y 1 1.76000000000000E+0
1.76000000000000E+0 0.00000000000000E+0 0.00000000000000E+0
0.00000000000000E+0 0.00000000000000E+0
BmDistLoadG 7 3 Y 1 1.76000000000000E+0
1.76000000000000E+0 0.00000000000000E+0 0.00000000000000E+0
0.00000000000000E+0 0.00000000000000E+0
BmDistLoadG 7 4 Y 1 1.76000000000000E+0
1.76000000000000E+0 0.00000000000000E+0 0.00000000000000E+0
0.00000000000000E+0 0.00000000000000E+0
BmDistLoadG 7 5 Y 1 1.76000000000000E+0
1.76000000000000E+0 0.00000000000000E+0 0.00000000000000E+0
0.00000000000000E+0 0.00000000000000E+0
BmDistLoadG 7 6 Y 1 1.76000000000000E+0
1.76000000000000E+0 0.00000000000000E+0 0.00000000000000E+0
0.00000000000000E+0 0.00000000000000E+0
BmDistLoadG 7 7 Y 1 1.76000000000000E+0
1.76000000000000E+0 0.00000000000000E+0 0.00000000000000E+0
0.00000000000000E+0 0.00000000000000E+0
BmDistLoadG 7 8 Y 1 1.76000000000000E+0
1.76000000000000E+0 0.00000000000000E+0 0.00000000000000E+0
0.00000000000000E+0 0.00000000000000E+0
BmDistLoadG 7 9 Y 1 1.76000000000000E+0
1.76000000000000E+0 0.00000000000000E+0 0.00000000000000E+0
0.00000000000000E+0 0.00000000000000E+0
BmDistLoadG 7 10 Y 1 1.76000000000000E+0
1.76000000000000E+0 0.00000000000000E+0 0.00000000000000E+0
0.00000000000000E+0 0.00000000000000E+0
BmDistLoadG 7 11 Y 1 1.76000000000000E+0
1.76000000000000E+0 0.00000000000000E+0 0.00000000000000E+0
0.00000000000000E+0 0.00000000000000E+0
BmDistLoadG 7 12 Y 1 1.76000000000000E+0
1.76000000000000E+0 0.00000000000000E+0 0.00000000000000E+0
0.00000000000000E+0 0.00000000000000E+0
BmDistLoadG 7 13 Z 1 1.15500000000000E+0
1.15500000000000E+0 0.00000000000000E+0 0.00000000000000E+0
0.00000000000000E+0 0.00000000000000E+0
BmDistLoadG 7 14 Z 1 2.31000000000000E+0
2.31000000000000E+0 0.00000000000000E+0 0.00000000000000E+0
0.00000000000000E+0 0.00000000000000E+0
BmDistLoadG 7 15 Z 1 2.31000000000000E+0
2.31000000000000E+0 0.00000000000000E+0 0.00000000000000E+0
0.00000000000000E+0 0.00000000000000E+0
BmDistLoadG 7 16 Z 1 2.31000000000000E+0
2.31000000000000E+0 0.00000000000000E+0 0.00000000000000E+0
0.00000000000000E+0 0.00000000000000E+0
BmDistLoadG 7 17 Z 1 2.31000000000000E+0
2.31000000000000E+0 0.00000000000000E+0 0.00000000000000E+0
0.00000000000000E+0 0.00000000000000E+0
BmDistLoadG 7 18 Z 1 2.31000000000000E+0
2.31000000000000E+0 0.00000000000000E+0 0.00000000000000E+0

```
0.00000000000000E+0      0.00000000000000E+0
   BmDistLoadG              7      19       Z      1     2.31000000000000E+0
2.31000000000000E+0      0.00000000000000E+0      0.00000000000000E+0
0.00000000000000E+0      0.00000000000000E+0
   BmDistLoadG              7      20       Z      1     2.31000000000000E+0
2.31000000000000E+0      0.00000000000000E+0      0.00000000000000E+0
0.00000000000000E+0      0.00000000000000E+0
   BmDistLoadG              7      21       Z      1     2.31000000000000E+0
2.31000000000000E+0      0.00000000000000E+0      0.00000000000000E+0
0.00000000000000E+0      0.00000000000000E+0
   BmDistLoadG              7      22       Z      1     1.15500000000000E+0
1.15500000000000E+0      0.00000000000000E+0      0.00000000000000E+0
0.00000000000000E+0      0.00000000000000E+0
   BmDistLoadG              7      25       Y      1     1.76000000000000E+0
1.76000000000000E+0      0.00000000000000E+0      0.00000000000000E+0
0.00000000000000E+0      0.00000000000000E+0
   BmDistLoadG              7      26       Y      1     1.76000000000000E+0
1.76000000000000E+0      0.00000000000000E+0      0.00000000000000E+0
0.00000000000000E+0      0.00000000000000E+0
   BmDistLoadG              7      27       Y      1     1.76000000000000E+0
1.76000000000000E+0      0.00000000000000E+0      0.00000000000000E+0
0.00000000000000E+0      0.00000000000000E+0
   BmDistLoadG              7      28       Y      1     1.76000000000000E+0
1.76000000000000E+0      0.00000000000000E+0      0.00000000000000E+0
0.00000000000000E+0      0.00000000000000E+0
   BmDistLoadG              7      29       Y      1     1.76000000000000E+0
1.76000000000000E+0      0.00000000000000E+0      0.00000000000000E+0
0.00000000000000E+0      0.00000000000000E+0
   BmDistLoadG              7      30       Y      1     1.76000000000000E+0
1.76000000000000E+0      0.00000000000000E+0      0.00000000000000E+0
0.00000000000000E+0      0.00000000000000E+0
   BmDistLoadG              7      31       Y      1     1.76000000000000E+0
1.76000000000000E+0      0.00000000000000E+0      0.00000000000000E+0
0.00000000000000E+0      0.00000000000000E+0
   BmDistLoadG              7      32       Y      1     1.76000000000000E+0
1.76000000000000E+0      0.00000000000000E+0      0.00000000000000E+0
0.00000000000000E+0      0.00000000000000E+0
   BmDistLoadG              7      33       Y      1     1.76000000000000E+0
1.76000000000000E+0      0.00000000000000E+0      0.00000000000000E+0
0.00000000000000E+0      0.00000000000000E+0
   BmDistLoadG              7      34       Y      1     1.76000000000000E+0
1.76000000000000E+0      0.00000000000000E+0      0.00000000000000E+0
0.00000000000000E+0      0.00000000000000E+0
   BmDistLoadG              7      35       Y      1     1.76000000000000E+0
1.76000000000000E+0      0.00000000000000E+0      0.00000000000000E+0
0.00000000000000E+0      0.00000000000000E+0
   BmDistLoadG              7      36       Y      1     1.76000000000000E+0
1.76000000000000E+0      0.00000000000000E+0      0.00000000000000E+0
0.00000000000000E+0      0.00000000000000E+0
   BmDistLoadG              7      37       Y      1     1.76000000000000E+0
1.76000000000000E+0      0.00000000000000E+0      0.00000000000000E+0
0.00000000000000E+0      0.00000000000000E+0
   BmDistLoadG              7      38       Y      1     1.76000000000000E+0
1.76000000000000E+0      0.00000000000000E+0      0.00000000000000E+0
```

```
0.00000000000000E+0       0.00000000000000E+0
   BmDistLoadG               7      39      Y       1     1.76000000000000E+0
1.76000000000000E+0       0.00000000000000E+0       0.00000000000000E+0
0.00000000000000E+0       0.00000000000000E+0
   BmDistLoadG               7      40      Y       1     1.76000000000000E+0
1.76000000000000E+0       0.00000000000000E+0       0.00000000000000E+0
0.00000000000000E+0       0.00000000000000E+0
   BmDistLoadG               7      41      Y       1     1.76000000000000E+0
1.76000000000000E+0       0.00000000000000E+0       0.00000000000000E+0
0.00000000000000E+0       0.00000000000000E+0
   BmDistLoadG               7      42      Y       1     1.76000000000000E+0
1.76000000000000E+0       0.00000000000000E+0       0.00000000000000E+0
0.00000000000000E+0       0.00000000000000E+0
   BmDistLoadG               7      43      Y       1     1.76000000000000E+0
1.76000000000000E+0       0.00000000000000E+0       0.00000000000000E+0
0.00000000000000E+0       0.00000000000000E+0
   BmDistLoadG               7      44      Y       1     1.76000000000000E+0
1.76000000000000E+0       0.00000000000000E+0       0.00000000000000E+0
0.00000000000000E+0       0.00000000000000E+0
   BmDistLoadG               7      45      Y       1     1.76000000000000E+0
1.76000000000000E+0       0.00000000000000E+0       0.00000000000000E+0
0.00000000000000E+0       0.00000000000000E+0
   BmDistLoadG               7      46      Y       1     1.76000000000000E+0
1.76000000000000E+0       0.00000000000000E+0       0.00000000000000E+0
0.00000000000000E+0       0.00000000000000E+0
   BmDistLoadG               7      47      Y       1     1.76000000000000E+0
1.76000000000000E+0       0.00000000000000E+0       0.00000000000000E+0
0.00000000000000E+0       0.00000000000000E+0
   BmDistLoadG               7      48      Y       1     1.76000000000000E+0
1.76000000000000E+0       0.00000000000000E+0       0.00000000000000E+0
0.00000000000000E+0       0.00000000000000E+0
   BmDistLoadG               7      49      Y       1     1.76000000000000E+0
1.76000000000000E+0       0.00000000000000E+0       0.00000000000000E+0
0.00000000000000E+0       0.00000000000000E+0
   BmDistLoadG               7      50      Y       1     1.76000000000000E+0
1.76000000000000E+0       0.00000000000000E+0       0.00000000000000E+0
0.00000000000000E+0       0.00000000000000E+0
   BmDistLoadG               7      51      Y       1     1.76000000000000E+0
1.76000000000000E+0       0.00000000000000E+0       0.00000000000000E+0
0.00000000000000E+0       0.00000000000000E+0
   BmDistLoadG               7      52      Y       1     1.76000000000000E+0
1.76000000000000E+0       0.00000000000000E+0       0.00000000000000E+0
0.00000000000000E+0       0.00000000000000E+0
   BmDistLoadG               7      53      Y       1     1.76000000000000E+0
1.76000000000000E+0       0.00000000000000E+0       0.00000000000000E+0
0.00000000000000E+0       0.00000000000000E+0
   BmDistLoadG               7      54      Y       1     1.76000000000000E+0
1.76000000000000E+0       0.00000000000000E+0       0.00000000000000E+0
0.00000000000000E+0       0.00000000000000E+0
   BmDistLoadG               7      55      Y       1     1.76000000000000E+0
1.76000000000000E+0       0.00000000000000E+0       0.00000000000000E+0
0.00000000000000E+0       0.00000000000000E+0
   BmDistLoadG               7      56      Y       1     1.76000000000000E+0
1.76000000000000E+0       0.00000000000000E+0       0.00000000000000E+0
```

```
0.00000000000000E+0      0.00000000000000E+0
   BmDistLoadG              7      57       Y      1     1.76000000000000E+0
1.76000000000000E+0      0.00000000000000E+0      0.00000000000000E+0
0.00000000000000E+0      0.00000000000000E+0
   BmDistLoadG              7      58       Y      1     1.76000000000000E+0
1.76000000000000E+0      0.00000000000000E+0      0.00000000000000E+0
0.00000000000000E+0      0.00000000000000E+0
   BmDistLoadG              7      59       Y      1     1.76000000000000E+0
1.76000000000000E+0      0.00000000000000E+0      0.00000000000000E+0
0.00000000000000E+0      0.00000000000000E+0
   BmDistLoadG              7      60       Y      1     1.76000000000000E+0
1.76000000000000E+0      0.00000000000000E+0      0.00000000000000E+0
0.00000000000000E+0      0.00000000000000E+0
   BmDistLoadG              7      61       Y      1     1.76000000000000E+0
1.76000000000000E+0      0.00000000000000E+0      0.00000000000000E+0
0.00000000000000E+0      0.00000000000000E+0
   BmDistLoadG              7      62       Y      1     1.76000000000000E+0
1.76000000000000E+0      0.00000000000000E+0      0.00000000000000E+0
0.00000000000000E+0      0.00000000000000E+0
   BmDistLoadG              7      63       Y      1     1.76000000000000E+0
1.76000000000000E+0      0.00000000000000E+0      0.00000000000000E+0
0.00000000000000E+0      0.00000000000000E+0
   BmDistLoadG              7      64       Y      1     1.76000000000000E+0
1.76000000000000E+0      0.00000000000000E+0      0.00000000000000E+0
0.00000000000000E+0      0.00000000000000E+0
   BmDistLoadG              7      65       Y      1     1.76000000000000E+0
1.76000000000000E+0      0.00000000000000E+0      0.00000000000000E+0
0.00000000000000E+0      0.00000000000000E+0
   BmDistLoadG              7      66       Y      1     1.76000000000000E+0
1.76000000000000E+0      0.00000000000000E+0      0.00000000000000E+0
0.00000000000000E+0      0.00000000000000E+0
   BmDistLoadG              7      67       Y      1     1.76000000000000E+0
1.76000000000000E+0      0.00000000000000E+0      0.00000000000000E+0
0.00000000000000E+0      0.00000000000000E+0
   BmDistLoadG              7      68       Y      1     1.76000000000000E+0
1.76000000000000E+0      0.00000000000000E+0      0.00000000000000E+0
0.00000000000000E+0      0.00000000000000E+0
   BmDistLoadG              7      69       Y      1     1.65000000000000E+0
1.65000000000000E+0      0.00000000000000E+0      0.00000000000000E+0
0.00000000000000E+0      0.00000000000000E+0
   BmDistLoadG              7      70       Y      1     1.65000000000000E+0
1.65000000000000E+0      0.00000000000000E+0      0.00000000000000E+0
0.00000000000000E+0      0.00000000000000E+0
   BmDistLoadG              7      71       Y      1     1.65000000000000E+0
1.65000000000000E+0      0.00000000000000E+0      0.00000000000000E+0
0.00000000000000E+0      0.00000000000000E+0
   BmDistLoadG              7      72       Y      1     1.65000000000000E+0
1.65000000000000E+0      0.00000000000000E+0      0.00000000000000E+0
0.00000000000000E+0      0.00000000000000E+0
   BmDistLoadG              7      73       Y      1     1.65000000000000E+0
1.65000000000000E+0      0.00000000000000E+0      0.00000000000000E+0
0.00000000000000E+0      0.00000000000000E+0
   BmDistLoadG              7      74       Y      1     3.30000000000000E+0
3.30000000000000E+0      0.00000000000000E+0      0.00000000000000E+0
```

```
0.00000000000000E+0      0.00000000000000E+0
   BmDistLoadG              7       75       Y        1      3.30000000000000E+0
3.30000000000000E+0      0.00000000000000E+0      0.00000000000000E+0
0.00000000000000E+0      0.00000000000000E+0
   BmDistLoadG              7       76       Y        1      3.30000000000000E+0
3.30000000000000E+0      0.00000000000000E+0      0.00000000000000E+0
0.00000000000000E+0      0.00000000000000E+0
   BmDistLoadG              7       77       Y        1      3.30000000000000E+0
3.30000000000000E+0      0.00000000000000E+0      0.00000000000000E+0
0.00000000000000E+0      0.00000000000000E+0
   BmDistLoadG              7       78       Y        1      3.30000000000000E+0
3.30000000000000E+0      0.00000000000000E+0      0.00000000000000E+0
0.00000000000000E+0      0.00000000000000E+0
   BmDistLoadG              7       79       Y        1      3.30000000000000E+0
3.30000000000000E+0      0.00000000000000E+0      0.00000000000000E+0
0.00000000000000E+0      0.00000000000000E+0
   BmDistLoadG              7       80       Y        1      3.30000000000000E+0
3.30000000000000E+0      0.00000000000000E+0      0.00000000000000E+0
0.00000000000000E+0      0.00000000000000E+0
   BmDistLoadG              7       81       Y        1      3.30000000000000E+0
3.30000000000000E+0      0.00000000000000E+0      0.00000000000000E+0
0.00000000000000E+0      0.00000000000000E+0
   BmDistLoadG              7       82       Y        1      3.30000000000000E+0
3.30000000000000E+0      0.00000000000000E+0      0.00000000000000E+0
0.00000000000000E+0      0.00000000000000E+0
   BmDistLoadG              7       83       Y        1      3.30000000000000E+0
3.30000000000000E+0      0.00000000000000E+0      0.00000000000000E+0
0.00000000000000E+0      0.00000000000000E+0
   BmDistLoadG              7       84       Y        1      3.30000000000000E+0
3.30000000000000E+0      0.00000000000000E+0      0.00000000000000E+0
0.00000000000000E+0      0.00000000000000E+0
   BmDistLoadG              7       85       Y        1      3.30000000000000E+0
3.30000000000000E+0      0.00000000000000E+0      0.00000000000000E+0
0.00000000000000E+0      0.00000000000000E+0
   BmDistLoadG              7       86       Y        1      3.30000000000000E+0
3.30000000000000E+0      0.00000000000000E+0      0.00000000000000E+0
0.00000000000000E+0      0.00000000000000E+0
   BmDistLoadG              7       87       Y        1      3.30000000000000E+0
3.30000000000000E+0      0.00000000000000E+0      0.00000000000000E+0
0.00000000000000E+0      0.00000000000000E+0
   BmDistLoadG              7       88       Y        1      3.30000000000000E+0
3.30000000000000E+0      0.00000000000000E+0      0.00000000000000E+0
0.00000000000000E+0      0.00000000000000E+0
   BmDistLoadG              7       89       Y        1      3.30000000000000E+0
3.30000000000000E+0      0.00000000000000E+0      0.00000000000000E+0
0.00000000000000E+0      0.00000000000000E+0
   BmDistLoadG              7       90       Y        1      3.30000000000000E+0
3.30000000000000E+0      0.00000000000000E+0      0.00000000000000E+0
0.00000000000000E+0      0.00000000000000E+0
   BmDistLoadG              7       91       Y        1      3.30000000000000E+0
3.30000000000000E+0      0.00000000000000E+0      0.00000000000000E+0
0.00000000000000E+0      0.00000000000000E+0
   BmDistLoadG              7       92       Y        1      3.30000000000000E+0
3.30000000000000E+0      0.00000000000000E+0      0.00000000000000E+0
```

```
0.00000000000000E+0      0.00000000000000E+0
   BmDistLoadG              7      93       Y       1     3.30000000000000E+0
3.30000000000000E+0      0.00000000000000E+0      0.00000000000000E+0
0.00000000000000E+0      0.00000000000000E+0
   BmDistLoadG              7      94       Y       1     3.30000000000000E+0
3.30000000000000E+0      0.00000000000000E+0      0.00000000000000E+0
0.00000000000000E+0      0.00000000000000E+0
   BmDistLoadG              7      95       Y       1     3.30000000000000E+0
3.30000000000000E+0      0.00000000000000E+0      0.00000000000000E+0
0.00000000000000E+0      0.00000000000000E+0
   BmDistLoadG              7      96       Y       1     3.30000000000000E+0
3.30000000000000E+0      0.00000000000000E+0      0.00000000000000E+0
0.00000000000000E+0      0.00000000000000E+0
   BmDistLoadG              7      97       Y       1     3.30000000000000E+0
3.30000000000000E+0      0.00000000000000E+0      0.00000000000000E+0
0.00000000000000E+0      0.00000000000000E+0
   BmDistLoadG              7      98       Y       1     3.30000000000000E+0
3.30000000000000E+0      0.00000000000000E+0      0.00000000000000E+0
0.00000000000000E+0      0.00000000000000E+0
   BmDistLoadG              7      99       Y       1     3.30000000000000E+0
3.30000000000000E+0      0.00000000000000E+0      0.00000000000000E+0
0.00000000000000E+0      0.00000000000000E+0
   BmDistLoadG              7     100       Y       1     3.30000000000000E+0
3.30000000000000E+0      0.00000000000000E+0      0.00000000000000E+0
0.00000000000000E+0      0.00000000000000E+0
   BmDistLoadG              7     101       Y       1     3.30000000000000E+0
3.30000000000000E+0      0.00000000000000E+0      0.00000000000000E+0
0.00000000000000E+0      0.00000000000000E+0
   BmDistLoadG              7     102       Y       1     3.30000000000000E+0
3.30000000000000E+0      0.00000000000000E+0      0.00000000000000E+0
0.00000000000000E+0      0.00000000000000E+0
   BmDistLoadG              7     103       Y       1     3.30000000000000E+0
3.30000000000000E+0      0.00000000000000E+0      0.00000000000000E+0
0.00000000000000E+0      0.00000000000000E+0
   BmDistLoadG              7     104       Y       1     3.30000000000000E+0
3.30000000000000E+0      0.00000000000000E+0      0.00000000000000E+0
0.00000000000000E+0      0.00000000000000E+0
   BmDistLoadG              7     105       Y       1     3.30000000000000E+0
3.30000000000000E+0      0.00000000000000E+0      0.00000000000000E+0
0.00000000000000E+0      0.00000000000000E+0
   BmDistLoadG              7     106       Y       1     3.30000000000000E+0
3.30000000000000E+0      0.00000000000000E+0      0.00000000000000E+0
0.00000000000000E+0      0.00000000000000E+0
   BmDistLoadG              7     107       Y       1     3.30000000000000E+0
3.30000000000000E+0      0.00000000000000E+0      0.00000000000000E+0
0.00000000000000E+0      0.00000000000000E+0
   BmDistLoadG              7     108       Y       1     3.30000000000000E+0
3.30000000000000E+0      0.00000000000000E+0      0.00000000000000E+0
0.00000000000000E+0      0.00000000000000E+0
   BmDistLoadG              7     109       Y       1     3.30000000000000E+0
3.30000000000000E+0      0.00000000000000E+0      0.00000000000000E+0
0.00000000000000E+0      0.00000000000000E+0
   BmDistLoadG              7     110       Y       1     3.30000000000000E+0
3.30000000000000E+0      0.00000000000000E+0      0.00000000000000E+0
```

```
0.00000000000000E+0       0.00000000000000E+0
   BmDistLoadG               7      111       Y       1      3.30000000000000E+0
3.30000000000000E+0       0.00000000000000E+0       0.00000000000000E+0
0.00000000000000E+0       0.00000000000000E+0
   BmDistLoadG               7      112       Y       1      3.30000000000000E+0
3.30000000000000E+0       0.00000000000000E+0       0.00000000000000E+0
0.00000000000000E+0       0.00000000000000E+0
   BmDistLoadG               7      113       Y       1      3.30000000000000E+0
3.30000000000000E+0       0.00000000000000E+0       0.00000000000000E+0
0.00000000000000E+0       0.00000000000000E+0
   BmDistLoadG               7      114       Y       1      1.65000000000000E+0
1.65000000000000E+0       0.00000000000000E+0       0.00000000000000E+0
0.00000000000000E+0       0.00000000000000E+0
   BmDistLoadG               7      115       Y       1      1.65000000000000E+0
1.65000000000000E+0       0.00000000000000E+0       0.00000000000000E+0
0.00000000000000E+0       0.00000000000000E+0
   BmDistLoadG               7      116       Y       1      1.65000000000000E+0
1.65000000000000E+0       0.00000000000000E+0       0.00000000000000E+0
0.00000000000000E+0       0.00000000000000E+0
   BmDistLoadG               7      117       Y       1      1.65000000000000E+0
1.65000000000000E+0       0.00000000000000E+0       0.00000000000000E+0
0.00000000000000E+0       0.00000000000000E+0
   BmDistLoadG               7      118       Y       1      1.65000000000000E+0
1.65000000000000E+0       0.00000000000000E+0       0.00000000000000E+0
0.00000000000000E+0       0.00000000000000E+0
   BmDistLoadG               7      119       Y       1      1.65000000000000E+0
1.65000000000000E+0       0.00000000000000E+0       0.00000000000000E+0
0.00000000000000E+0       0.00000000000000E+0
   BmDistLoadG               7      120       Y       1      1.65000000000000E+0
1.65000000000000E+0       0.00000000000000E+0       0.00000000000000E+0
0.00000000000000E+0       0.00000000000000E+0
   BmDistLoadG               7      121       Y       1      1.65000000000000E+0
1.65000000000000E+0       0.00000000000000E+0       0.00000000000000E+0
0.00000000000000E+0       0.00000000000000E+0
   BmDistLoadG               7      122       Y       1      1.65000000000000E+0
1.65000000000000E+0       0.00000000000000E+0       0.00000000000000E+0
0.00000000000000E+0       0.00000000000000E+0
   BmDistLoadG               7      123       Y       1      1.65000000000000E+0
1.65000000000000E+0       0.00000000000000E+0       0.00000000000000E+0
0.00000000000000E+0       0.00000000000000E+0
   BmDistLoadG               7      124       Y       1      3.30000000000000E+0
3.30000000000000E+0       0.00000000000000E+0       0.00000000000000E+0
0.00000000000000E+0       0.00000000000000E+0
   BmDistLoadG               7      125       Y       1      3.30000000000000E+0
3.30000000000000E+0       0.00000000000000E+0       0.00000000000000E+0
0.00000000000000E+0       0.00000000000000E+0
   BmDistLoadG               7      126       Y       1      3.30000000000000E+0
3.30000000000000E+0       0.00000000000000E+0       0.00000000000000E+0
0.00000000000000E+0       0.00000000000000E+0
   BmDistLoadG               7      127       Y       1      3.30000000000000E+0
3.30000000000000E+0       0.00000000000000E+0       0.00000000000000E+0
0.00000000000000E+0       0.00000000000000E+0
   BmDistLoadG               7      128       Y       1      3.30000000000000E+0
3.30000000000000E+0       0.00000000000000E+0       0.00000000000000E+0
```

```
0.00000000000000E+0      0.00000000000000E+0
   BmDistLoadG              7     129      Y      1     3.30000000000000E+0
3.30000000000000E+0      0.00000000000000E+0      0.00000000000000E+0
0.00000000000000E+0      0.00000000000000E+0
   BmDistLoadG              7     130      Y      1     3.30000000000000E+0
3.30000000000000E+0      0.00000000000000E+0      0.00000000000000E+0
0.00000000000000E+0      0.00000000000000E+0
   BmDistLoadG              7     131      Y      1     3.30000000000000E+0
3.30000000000000E+0      0.00000000000000E+0      0.00000000000000E+0
0.00000000000000E+0      0.00000000000000E+0
   BmDistLoadG              7     132      Y      1     3.30000000000000E+0
3.30000000000000E+0      0.00000000000000E+0      0.00000000000000E+0
0.00000000000000E+0      0.00000000000000E+0
   BmDistLoadG              7     133      Y      1     3.30000000000000E+0
3.30000000000000E+0      0.00000000000000E+0      0.00000000000000E+0
0.00000000000000E+0      0.00000000000000E+0
   BmDistLoadG              7     134      Y      1     3.30000000000000E+0
3.30000000000000E+0      0.00000000000000E+0      0.00000000000000E+0
0.00000000000000E+0      0.00000000000000E+0
   BmDistLoadG              7     135      Y      1     3.30000000000000E+0
3.30000000000000E+0      0.00000000000000E+0      0.00000000000000E+0
0.00000000000000E+0      0.00000000000000E+0
   BmDistLoadG              7     136      Y      1     3.30000000000000E+0
3.30000000000000E+0      0.00000000000000E+0      0.00000000000000E+0
0.00000000000000E+0      0.00000000000000E+0
   BmDistLoadG              7     137      Y      1     3.30000000000000E+0
3.30000000000000E+0      0.00000000000000E+0      0.00000000000000E+0
0.00000000000000E+0      0.00000000000000E+0
   BmDistLoadG              7     138      Y      1     3.30000000000000E+0
3.30000000000000E+0      0.00000000000000E+0      0.00000000000000E+0
0.00000000000000E+0      0.00000000000000E+0
   BmDistLoadG              7     139      Y      1     3.30000000000000E+0
3.30000000000000E+0      0.00000000000000E+0      0.00000000000000E+0
0.00000000000000E+0      0.00000000000000E+0
   BmDistLoadG              7     140      Y      1     3.30000000000000E+0
3.30000000000000E+0      0.00000000000000E+0      0.00000000000000E+0
0.00000000000000E+0      0.00000000000000E+0
   BmDistLoadG              7     141      Y      1     3.30000000000000E+0
3.30000000000000E+0      0.00000000000000E+0      0.00000000000000E+0
0.00000000000000E+0      0.00000000000000E+0
   BmDistLoadG              7     142      Y      1     3.30000000000000E+0
3.30000000000000E+0      0.00000000000000E+0      0.00000000000000E+0
0.00000000000000E+0      0.00000000000000E+0
   BmDistLoadG              7     143      Y      1     3.30000000000000E+0
3.30000000000000E+0      0.00000000000000E+0      0.00000000000000E+0
0.00000000000000E+0      0.00000000000000E+0
   BmDistLoadG              7     144      Y      1     3.30000000000000E+0
3.30000000000000E+0      0.00000000000000E+0      0.00000000000000E+0
0.00000000000000E+0      0.00000000000000E+0
   BmDistLoadG              7     145      Y      1     3.30000000000000E+0
3.30000000000000E+0      0.00000000000000E+0      0.00000000000000E+0
0.00000000000000E+0      0.00000000000000E+0
   BmDistLoadG              7     146      Y      1     3.30000000000000E+0
3.30000000000000E+0      0.00000000000000E+0      0.00000000000000E+0
```

```
0.00000000000000E+0      0.00000000000000E+0
   BmDistLoadG              7     147      Y      1     3.30000000000000E+0
3.30000000000000E+0      0.00000000000000E+0      0.00000000000000E+0
0.00000000000000E+0      0.00000000000000E+0
   BmDistLoadG              7     148      Y      1     3.30000000000000E+0
3.30000000000000E+0      0.00000000000000E+0      0.00000000000000E+0
0.00000000000000E+0      0.00000000000000E+0
   BmDistLoadG              7     149      Y      1     3.30000000000000E+0
3.30000000000000E+0      0.00000000000000E+0      0.00000000000000E+0
0.00000000000000E+0      0.00000000000000E+0
   BmDistLoadG              7     150      Y      1     3.30000000000000E+0
3.30000000000000E+0      0.00000000000000E+0      0.00000000000000E+0
0.00000000000000E+0      0.00000000000000E+0
   BmDistLoadG              7     151      Y      1     3.30000000000000E+0
3.30000000000000E+0      0.00000000000000E+0      0.00000000000000E+0
0.00000000000000E+0      0.00000000000000E+0
   BmDistLoadG              7     152      Y      1     3.30000000000000E+0
3.30000000000000E+0      0.00000000000000E+0      0.00000000000000E+0
0.00000000000000E+0      0.00000000000000E+0
   BmDistLoadG              7     153      Y      1     3.30000000000000E+0
3.30000000000000E+0      0.00000000000000E+0      0.00000000000000E+0
0.00000000000000E+0      0.00000000000000E+0
   BmDistLoadG              7     154      Y      1     3.30000000000000E+0
3.30000000000000E+0      0.00000000000000E+0      0.00000000000000E+0
0.00000000000000E+0      0.00000000000000E+0
   BmDistLoadG              7     155      Y      1     3.30000000000000E+0
3.30000000000000E+0      0.00000000000000E+0      0.00000000000000E+0
0.00000000000000E+0      0.00000000000000E+0
   BmDistLoadG              7     156      Y      1     3.30000000000000E+0
3.30000000000000E+0      0.00000000000000E+0      0.00000000000000E+0
0.00000000000000E+0      0.00000000000000E+0
   BmDistLoadG              7     157      Y      1     3.30000000000000E+0
3.30000000000000E+0      0.00000000000000E+0      0.00000000000000E+0
0.00000000000000E+0      0.00000000000000E+0
   BmDistLoadG              7     158      Y      1     3.30000000000000E+0
3.30000000000000E+0      0.00000000000000E+0      0.00000000000000E+0
0.00000000000000E+0      0.00000000000000E+0
   BmDistLoadG              7     159      Y      1     1.65000000000000E+0
1.65000000000000E+0      0.00000000000000E+0      0.00000000000000E+0
0.00000000000000E+0      0.00000000000000E+0
   BmDistLoadG              7     160      Y      1     1.65000000000000E+0
1.65000000000000E+0      0.00000000000000E+0      0.00000000000000E+0
0.00000000000000E+0      0.00000000000000E+0
   BmDistLoadG              7     161      Y      1     1.65000000000000E+0
1.65000000000000E+0      0.00000000000000E+0      0.00000000000000E+0
0.00000000000000E+0      0.00000000000000E+0
   BmDistLoadG              7     162      Y      1     1.65000000000000E+0
1.65000000000000E+0      0.00000000000000E+0      0.00000000000000E+0
0.00000000000000E+0      0.00000000000000E+0
   BmDistLoadG              7     163      Y      1     1.65000000000000E+0
1.65000000000000E+0      0.00000000000000E+0      0.00000000000000E+0
0.00000000000000E+0      0.00000000000000E+0
   BmDistLoadG              7     164      Z      1     1.15500000000000E+0
1.15500000000000E+0      0.00000000000000E+0      0.00000000000000E+0
```

```
0.00000000000000E+0      0.00000000000000E+0
   BmDistLoadG              7     165      Z      1     1.15500000000000E+0
1.15500000000000E+0      0.00000000000000E+0      0.00000000000000E+0
0.00000000000000E+0      0.00000000000000E+0
   BmDistLoadG              7     166      Z      1     1.15500000000000E+0
1.15500000000000E+0      0.00000000000000E+0      0.00000000000000E+0
0.00000000000000E+0      0.00000000000000E+0
   BmDistLoadG              7     167      Z      1     1.15500000000000E+0
1.15500000000000E+0      0.00000000000000E+0      0.00000000000000E+0
0.00000000000000E+0      0.00000000000000E+0
   BmDistLoadG              7     168      Z      1     1.15500000000000E+0
1.15500000000000E+0      0.00000000000000E+0      0.00000000000000E+0
0.00000000000000E+0      0.00000000000000E+0
   BmDistLoadG              7     169      Z      1     1.15500000000000E+0
1.15500000000000E+0      0.00000000000000E+0      0.00000000000000E+0
0.00000000000000E+0      0.00000000000000E+0
   BmDistLoadG              7     170      Z      1     1.15500000000000E+0
1.15500000000000E+0      0.00000000000000E+0      0.00000000000000E+0
0.00000000000000E+0      0.00000000000000E+0
   BmDistLoadG              7     171      Z      1     1.15500000000000E+0
1.15500000000000E+0      0.00000000000000E+0      0.00000000000000E+0
0.00000000000000E+0      0.00000000000000E+0
   BmDistLoadG              7     172      Z      1     1.15500000000000E+0
1.15500000000000E+0      0.00000000000000E+0      0.00000000000000E+0
0.00000000000000E+0      0.00000000000000E+0
   BmDistLoadG              7     173      Z      1     1.15500000000000E+0
1.15500000000000E+0      0.00000000000000E+0      0.00000000000000E+0
0.00000000000000E+0      0.00000000000000E+0
   BmDistLoadG              7     174      Z      1     1.15500000000000E+0
1.15500000000000E+0      0.00000000000000E+0      0.00000000000000E+0
0.00000000000000E+0      0.00000000000000E+0
   BmDistLoadG              7     175      Z      1     1.15500000000000E+0
1.15500000000000E+0      0.00000000000000E+0      0.00000000000000E+0
0.00000000000000E+0      0.00000000000000E+0
   BmDistLoadG              7     176      Z      1     1.15500000000000E+0
1.15500000000000E+0      0.00000000000000E+0      0.00000000000000E+0
0.00000000000000E+0      0.00000000000000E+0
   BmDistLoadG              7     177      Z      1     1.15500000000000E+0
1.15500000000000E+0      0.00000000000000E+0      0.00000000000000E+0
0.00000000000000E+0      0.00000000000000E+0
   BmDistLoadG              7     178      Z      1     1.15500000000000E+0
1.15500000000000E+0      0.00000000000000E+0      0.00000000000000E+0
0.00000000000000E+0      0.00000000000000E+0
   BmDistLoadG              7     179      Z      1     1.15500000000000E+0
1.15500000000000E+0      0.00000000000000E+0      0.00000000000000E+0
0.00000000000000E+0      0.00000000000000E+0
   BmDistLoadG              7     180      Z      1     1.15500000000000E+0
1.15500000000000E+0      0.00000000000000E+0      0.00000000000000E+0
0.00000000000000E+0      0.00000000000000E+0
   BmDistLoadG              7     181      Z      1     1.15500000000000E+0
1.15500000000000E+0      0.00000000000000E+0      0.00000000000000E+0
0.00000000000000E+0      0.00000000000000E+0
   BmDistLoadG              7     182      Z      1     1.15500000000000E+0
1.15500000000000E+0      0.00000000000000E+0      0.00000000000000E+0
```

```
0.00000000000000E+0      0.00000000000000E+0
   BmDistLoadG              7     183      Z      1     1.15500000000000E+0
1.15500000000000E+0      0.00000000000000E+0      0.00000000000000E+0
0.00000000000000E+0      0.00000000000000E+0
   BmDistLoadG              7     184      Z      1     1.15500000000000E+0
1.15500000000000E+0      0.00000000000000E+0      0.00000000000000E+0
0.00000000000000E+0      0.00000000000000E+0
   BmDistLoadG              7     185      Z      1     1.15500000000000E+0
1.15500000000000E+0      0.00000000000000E+0      0.00000000000000E+0
0.00000000000000E+0      0.00000000000000E+0
   BmDistLoadG              7     186      Z      1     1.15500000000000E+0
1.15500000000000E+0      0.00000000000000E+0      0.00000000000000E+0
0.00000000000000E+0      0.00000000000000E+0
   BmDistLoadG              7     187      Z      1     1.15500000000000E+0
1.15500000000000E+0      0.00000000000000E+0      0.00000000000000E+0
0.00000000000000E+0      0.00000000000000E+0
   BmDistLoadG              7     188      Z      1     1.15500000000000E+0
1.15500000000000E+0      0.00000000000000E+0      0.00000000000000E+0
0.00000000000000E+0      0.00000000000000E+0
   BmDistLoadG              7     189      Z      1     1.15500000000000E+0
1.15500000000000E+0      0.00000000000000E+0      0.00000000000000E+0
0.00000000000000E+0      0.00000000000000E+0
   BmDistLoadG              7     190      Z      1     1.15500000000000E+0
1.15500000000000E+0      0.00000000000000E+0      0.00000000000000E+0
0.00000000000000E+0      0.00000000000000E+0
   BmDistLoadG              7     191      Z      1     1.15500000000000E+0
1.15500000000000E+0      0.00000000000000E+0      0.00000000000000E+0
0.00000000000000E+0      0.00000000000000E+0
   BmDistLoadG              7     192      Z      1     1.15500000000000E+0
1.15500000000000E+0      0.00000000000000E+0      0.00000000000000E+0
0.00000000000000E+0      0.00000000000000E+0
   BmDistLoadG              7     193      Z      1     1.15500000000000E+0
1.15500000000000E+0      0.00000000000000E+0      0.00000000000000E+0
0.00000000000000E+0      0.00000000000000E+0
   BmDistLoadG              7     194      Z      1     1.15500000000000E+0
1.15500000000000E+0      0.00000000000000E+0      0.00000000000000E+0
0.00000000000000E+0      0.00000000000000E+0
   BmDistLoadG              7     195      Z      1     1.15500000000000E+0
1.15500000000000E+0      0.00000000000000E+0      0.00000000000000E+0
0.00000000000000E+0      0.00000000000000E+0
   BmDistLoadG              7     196      Z      1     1.15500000000000E+0
1.15500000000000E+0      0.00000000000000E+0      0.00000000000000E+0
0.00000000000000E+0      0.00000000000000E+0
   BmDistLoadG              7     197      Z      1     1.15500000000000E+0
1.15500000000000E+0      0.00000000000000E+0      0.00000000000000E+0
0.00000000000000E+0      0.00000000000000E+0
   BmDistLoadG              7     198      Z      1     1.15500000000000E+0
1.15500000000000E+0      0.00000000000000E+0      0.00000000000000E+0
0.00000000000000E+0      0.00000000000000E+0
   BmDistLoadG              7     199      Z      1     1.15500000000000E+0
1.15500000000000E+0      0.00000000000000E+0      0.00000000000000E+0
0.00000000000000E+0      0.00000000000000E+0
   BmDistLoadG              7     200      Z      1     1.15500000000000E+0
1.15500000000000E+0      0.00000000000000E+0      0.00000000000000E+0
```

```
0.00000000000000E+0      0.00000000000000E+0
   BmDistLoadG              7     201      Z      1     1.15500000000000E+0
1.15500000000000E+0      0.00000000000000E+0      0.00000000000000E+0
0.00000000000000E+0      0.00000000000000E+0
   BmDistLoadG              7     202      Z      1     1.15500000000000E+0
1.15500000000000E+0      0.00000000000000E+0      0.00000000000000E+0
0.00000000000000E+0      0.00000000000000E+0
   BmDistLoadG              7     203      Z      1     1.15500000000000E+0
1.15500000000000E+0      0.00000000000000E+0      0.00000000000000E+0
0.00000000000000E+0      0.00000000000000E+0
   BmDistLoadG              7     204      Z      1     1.15500000000000E+0
1.15500000000000E+0      0.00000000000000E+0      0.00000000000000E+0
0.00000000000000E+0      0.00000000000000E+0
   BmDistLoadG              7     205      Z      1     1.15500000000000E+0
1.15500000000000E+0      0.00000000000000E+0      0.00000000000000E+0
0.00000000000000E+0      0.00000000000000E+0
   BmDistLoadG              7     206      Z      1     1.15500000000000E+0
1.15500000000000E+0      0.00000000000000E+0      0.00000000000000E+0
0.00000000000000E+0      0.00000000000000E+0
   BmDistLoadG              7     207      Z      1     1.15500000000000E+0
1.15500000000000E+0      0.00000000000000E+0      0.00000000000000E+0
0.00000000000000E+0      0.00000000000000E+0
   BmDistLoadG              7     208      Z      1     1.15500000000000E+0
1.15500000000000E+0      0.00000000000000E+0      0.00000000000000E+0
0.00000000000000E+0      0.00000000000000E+0
   BmDistLoadG              7     209      Z      1     1.15500000000000E+0
1.15500000000000E+0      0.00000000000000E+0      0.00000000000000E+0
0.00000000000000E+0      0.00000000000000E+0
   BmDistLoadG              7     210      Z      1     1.15500000000000E+0
1.15500000000000E+0      0.00000000000000E+0      0.00000000000000E+0
0.00000000000000E+0      0.00000000000000E+0
   BmDistLoadG              7     211      Z      1     1.15500000000000E+0
1.15500000000000E+0      0.00000000000000E+0      0.00000000000000E+0
0.00000000000000E+0      0.00000000000000E+0
   BmDistLoadG              7     212      Z      1     1.15500000000000E+0
1.15500000000000E+0      0.00000000000000E+0      0.00000000000000E+0
0.00000000000000E+0      0.00000000000000E+0
   BmDistLoadG              7     213      Z      1     1.15500000000000E+0
1.15500000000000E+0      0.00000000000000E+0      0.00000000000000E+0
0.00000000000000E+0      0.00000000000000E+0
   BmDistLoadG              7     214      Z      1     1.15500000000000E+0
1.15500000000000E+0      0.00000000000000E+0      0.00000000000000E+0
0.00000000000000E+0      0.00000000000000E+0
   BmDistLoadG              7     215      Z      1     1.15500000000000E+0
1.15500000000000E+0      0.00000000000000E+0      0.00000000000000E+0
0.00000000000000E+0      0.00000000000000E+0
   BmDistLoadG              7     216      Z      1     1.15500000000000E+0
1.15500000000000E+0      0.00000000000000E+0      0.00000000000000E+0
0.00000000000000E+0      0.00000000000000E+0
   BmDistLoadG              7     217      Z      1     1.15500000000000E+0
1.15500000000000E+0      0.00000000000000E+0      0.00000000000000E+0
0.00000000000000E+0      0.00000000000000E+0
   BmDistLoadG              7     218      Z      1     2.31000000000000E+0
2.31000000000000E+0      0.00000000000000E+0      0.00000000000000E+0
```

```
0.00000000000000E+0      0.00000000000000E+0
   BmDistLoadG              7     219       Z       1     2.31000000000000E+0
2.31000000000000E+0      0.00000000000000E+0      0.00000000000000E+0
0.00000000000000E+0      0.00000000000000E+0
   BmDistLoadG              7     220       Z       1     2.31000000000000E+0
2.31000000000000E+0      0.00000000000000E+0      0.00000000000000E+0
0.00000000000000E+0      0.00000000000000E+0
   BmDistLoadG              7     221       Z       1     2.31000000000000E+0
2.31000000000000E+0      0.00000000000000E+0      0.00000000000000E+0
0.00000000000000E+0      0.00000000000000E+0
   BmDistLoadG              7     222       Z       1     2.31000000000000E+0
2.31000000000000E+0      0.00000000000000E+0      0.00000000000000E+0
0.00000000000000E+0      0.00000000000000E+0
   BmDistLoadG              7     223       Z       1     2.31000000000000E+0
2.31000000000000E+0      0.00000000000000E+0      0.00000000000000E+0
0.00000000000000E+0      0.00000000000000E+0
   BmDistLoadG              7     224       Z       1     2.31000000000000E+0
2.31000000000000E+0      0.00000000000000E+0      0.00000000000000E+0
0.00000000000000E+0      0.00000000000000E+0
   BmDistLoadG              7     225       Z       1     2.31000000000000E+0
2.31000000000000E+0      0.00000000000000E+0      0.00000000000000E+0
0.00000000000000E+0      0.00000000000000E+0
   BmDistLoadG              7     226       Z       1     2.31000000000000E+0
2.31000000000000E+0      0.00000000000000E+0      0.00000000000000E+0
0.00000000000000E+0      0.00000000000000E+0
   BmDistLoadG              7     227       Z       1     2.31000000000000E+0
2.31000000000000E+0      0.00000000000000E+0      0.00000000000000E+0
0.00000000000000E+0      0.00000000000000E+0
   BmDistLoadG              7     228       Z       1     2.31000000000000E+0
2.31000000000000E+0      0.00000000000000E+0      0.00000000000000E+0
0.00000000000000E+0      0.00000000000000E+0
   BmDistLoadG              7     229       Z       1     2.31000000000000E+0
2.31000000000000E+0      0.00000000000000E+0      0.00000000000000E+0
0.00000000000000E+0      0.00000000000000E+0
   BmDistLoadG              7     230       Z       1     2.31000000000000E+0
2.31000000000000E+0      0.00000000000000E+0      0.00000000000000E+0
0.00000000000000E+0      0.00000000000000E+0
   BmDistLoadG              7     231       Z       1     2.31000000000000E+0
2.31000000000000E+0      0.00000000000000E+0      0.00000000000000E+0
0.00000000000000E+0      0.00000000000000E+0
   BmDistLoadG              7     232       Z       1     2.31000000000000E+0
2.31000000000000E+0      0.00000000000000E+0      0.00000000000000E+0
0.00000000000000E+0      0.00000000000000E+0
   BmDistLoadG              7     233       Z       1     2.31000000000000E+0
2.31000000000000E+0      0.00000000000000E+0      0.00000000000000E+0
0.00000000000000E+0      0.00000000000000E+0
   BmDistLoadG              7     234       Z       1     2.31000000000000E+0
2.31000000000000E+0      0.00000000000000E+0      0.00000000000000E+0
0.00000000000000E+0      0.00000000000000E+0
   BmDistLoadG              7     235       Z       1     2.31000000000000E+0
2.31000000000000E+0      0.00000000000000E+0      0.00000000000000E+0
0.00000000000000E+0      0.00000000000000E+0
   BmDistLoadG              7     236       Z       1     2.31000000000000E+0
2.31000000000000E+0      0.00000000000000E+0      0.00000000000000E+0
```

```
0.00000000000000E+0      0.00000000000000E+0
   BmDistLoadG              7     237      Z      1     2.31000000000000E+0
2.31000000000000E+0      0.00000000000000E+0      0.00000000000000E+0
0.00000000000000E+0      0.00000000000000E+0
   BmDistLoadG              7     238      Z      1     2.31000000000000E+0
2.31000000000000E+0      0.00000000000000E+0      0.00000000000000E+0
0.00000000000000E+0      0.00000000000000E+0
   BmDistLoadG              7     239      Z      1     2.31000000000000E+0
2.31000000000000E+0      0.00000000000000E+0      0.00000000000000E+0
0.00000000000000E+0      0.00000000000000E+0
   BmDistLoadG              7     240      Z      1     2.31000000000000E+0
2.31000000000000E+0      0.00000000000000E+0      0.00000000000000E+0
0.00000000000000E+0      0.00000000000000E+0
   BmDistLoadG              7     241      Z      1     2.31000000000000E+0
2.31000000000000E+0      0.00000000000000E+0      0.00000000000000E+0
0.00000000000000E+0      0.00000000000000E+0
   BmDistLoadG              7     242      Z      1     2.31000000000000E+0
2.31000000000000E+0      0.00000000000000E+0      0.00000000000000E+0
0.00000000000000E+0      0.00000000000000E+0
   BmDistLoadG              7     243      Z      1     2.31000000000000E+0
2.31000000000000E+0      0.00000000000000E+0      0.00000000000000E+0
0.00000000000000E+0      0.00000000000000E+0
   BmDistLoadG              7     244      Z      1     2.31000000000000E+0
2.31000000000000E+0      0.00000000000000E+0      0.00000000000000E+0
0.00000000000000E+0      0.00000000000000E+0
   BmDistLoadG              7     245      Z      1     2.31000000000000E+0
2.31000000000000E+0      0.00000000000000E+0      0.00000000000000E+0
0.00000000000000E+0      0.00000000000000E+0
   BmDistLoadG              7     246      Z      1     2.31000000000000E+0
2.31000000000000E+0      0.00000000000000E+0      0.00000000000000E+0
0.00000000000000E+0      0.00000000000000E+0
   BmDistLoadG              7     247      Z      1     2.31000000000000E+0
2.31000000000000E+0      0.00000000000000E+0      0.00000000000000E+0
0.00000000000000E+0      0.00000000000000E+0
   BmDistLoadG              7     248      Z      1     2.31000000000000E+0
2.31000000000000E+0      0.00000000000000E+0      0.00000000000000E+0
0.00000000000000E+0      0.00000000000000E+0
   BmDistLoadG              7     249      Z      1     2.31000000000000E+0
2.31000000000000E+0      0.00000000000000E+0      0.00000000000000E+0
0.00000000000000E+0      0.00000000000000E+0
   BmDistLoadG              7     250      Z      1     2.31000000000000E+0
2.31000000000000E+0      0.00000000000000E+0      0.00000000000000E+0
0.00000000000000E+0      0.00000000000000E+0
   BmDistLoadG              7     251      Z      1     2.31000000000000E+0
2.31000000000000E+0      0.00000000000000E+0      0.00000000000000E+0
0.00000000000000E+0      0.00000000000000E+0
   BmDistLoadG              7     252      Z      1     2.31000000000000E+0
2.31000000000000E+0      0.00000000000000E+0      0.00000000000000E+0
0.00000000000000E+0      0.00000000000000E+0
   BmDistLoadG              7     253      Z      1     2.31000000000000E+0
2.31000000000000E+0      0.00000000000000E+0      0.00000000000000E+0
0.00000000000000E+0      0.00000000000000E+0
   BmDistLoadG              7     254      Z      1     2.31000000000000E+0
2.31000000000000E+0      0.00000000000000E+0      0.00000000000000E+0
```

```
0.00000000000000E+0      0.00000000000000E+0
   BmDistLoadG              7     255      Z      1     2.31000000000000E+0
2.31000000000000E+0      0.00000000000000E+0      0.00000000000000E+0
0.00000000000000E+0      0.00000000000000E+0
   BmDistLoadG              7     256      Z      1     2.31000000000000E+0
2.31000000000000E+0      0.00000000000000E+0      0.00000000000000E+0
0.00000000000000E+0      0.00000000000000E+0
   BmDistLoadG              7     257      Z      1     2.31000000000000E+0
2.31000000000000E+0      0.00000000000000E+0      0.00000000000000E+0
0.00000000000000E+0      0.00000000000000E+0
   BmDistLoadG              7     258      Z      1     2.31000000000000E+0
2.31000000000000E+0      0.00000000000000E+0      0.00000000000000E+0
0.00000000000000E+0      0.00000000000000E+0
   BmDistLoadG              7     259      Z      1     2.31000000000000E+0
2.31000000000000E+0      0.00000000000000E+0      0.00000000000000E+0
0.00000000000000E+0      0.00000000000000E+0
   BmDistLoadG              7     260      Z      1     2.31000000000000E+0
2.31000000000000E+0      0.00000000000000E+0      0.00000000000000E+0
0.00000000000000E+0      0.00000000000000E+0
   BmDistLoadG              7     261      Z      1     2.31000000000000E+0
2.31000000000000E+0      0.00000000000000E+0      0.00000000000000E+0
0.00000000000000E+0      0.00000000000000E+0
   BmDistLoadG              7     262      Z      1     2.31000000000000E+0
2.31000000000000E+0      0.00000000000000E+0      0.00000000000000E+0
0.00000000000000E+0      0.00000000000000E+0
   BmDistLoadG              7     263      Z      1     2.31000000000000E+0
2.31000000000000E+0      0.00000000000000E+0      0.00000000000000E+0
0.00000000000000E+0      0.00000000000000E+0
   BmDistLoadG              7     264      Z      1     2.31000000000000E+0
2.31000000000000E+0      0.00000000000000E+0      0.00000000000000E+0
0.00000000000000E+0      0.00000000000000E+0
   BmDistLoadG              7     265      Z      1     2.31000000000000E+0
2.31000000000000E+0      0.00000000000000E+0      0.00000000000000E+0
0.00000000000000E+0      0.00000000000000E+0
   BmDistLoadG              7     266      Z      1     2.31000000000000E+0
2.31000000000000E+0      0.00000000000000E+0      0.00000000000000E+0
0.00000000000000E+0      0.00000000000000E+0
   BmDistLoadG              7     267      Z      1     2.31000000000000E+0
2.31000000000000E+0      0.00000000000000E+0      0.00000000000000E+0
0.00000000000000E+0      0.00000000000000E+0
   BmDistLoadG              7     268      Z      1     2.31000000000000E+0
2.31000000000000E+0      0.00000000000000E+0      0.00000000000000E+0
0.00000000000000E+0      0.00000000000000E+0
   BmDistLoadG              7     269      Z      1     2.31000000000000E+0
2.31000000000000E+0      0.00000000000000E+0      0.00000000000000E+0
0.00000000000000E+0      0.00000000000000E+0
   BmDistLoadG              7     270      Z      1     2.31000000000000E+0
2.31000000000000E+0      0.00000000000000E+0      0.00000000000000E+0
0.00000000000000E+0      0.00000000000000E+0
   BmDistLoadG              7     271      Z      1     2.31000000000000E+0
2.31000000000000E+0      0.00000000000000E+0      0.00000000000000E+0
0.00000000000000E+0      0.00000000000000E+0
   BmDistLoadG              7     272      Z      1     2.31000000000000E+0
2.31000000000000E+0      0.00000000000000E+0      0.00000000000000E+0
```

```
0.00000000000000E+0      0.00000000000000E+0
   BmDistLoadG              7     273      Z      1     2.31000000000000E+0
2.31000000000000E+0      0.00000000000000E+0      0.00000000000000E+0
0.00000000000000E+0      0.00000000000000E+0
   BmDistLoadG              7     274      Z      1     2.31000000000000E+0
2.31000000000000E+0      0.00000000000000E+0      0.00000000000000E+0
0.00000000000000E+0      0.00000000000000E+0
   BmDistLoadG              7     275      Z      1     2.31000000000000E+0
2.31000000000000E+0      0.00000000000000E+0      0.00000000000000E+0
0.00000000000000E+0      0.00000000000000E+0
   BmDistLoadG              7     276      Z      1     2.31000000000000E+0
2.31000000000000E+0      0.00000000000000E+0      0.00000000000000E+0
0.00000000000000E+0      0.00000000000000E+0
   BmDistLoadG              7     277      Z      1     2.31000000000000E+0
2.31000000000000E+0      0.00000000000000E+0      0.00000000000000E+0
0.00000000000000E+0      0.00000000000000E+0
   BmDistLoadG              7     278      Z      1     2.31000000000000E+0
2.31000000000000E+0      0.00000000000000E+0      0.00000000000000E+0
0.00000000000000E+0      0.00000000000000E+0
   BmDistLoadG              7     279      Z      1     2.31000000000000E+0
2.31000000000000E+0      0.00000000000000E+0      0.00000000000000E+0
0.00000000000000E+0      0.00000000000000E+0
   BmDistLoadG              7     280      Z      1     2.31000000000000E+0
2.31000000000000E+0      0.00000000000000E+0      0.00000000000000E+0
0.00000000000000E+0      0.00000000000000E+0
   BmDistLoadG              7     281      Z      1     2.31000000000000E+0
2.31000000000000E+0      0.00000000000000E+0      0.00000000000000E+0
0.00000000000000E+0      0.00000000000000E+0
   BmDistLoadG              7     282      Z      1     2.31000000000000E+0
2.31000000000000E+0      0.00000000000000E+0      0.00000000000000E+0
0.00000000000000E+0      0.00000000000000E+0
   BmDistLoadG              7     283      Z      1     2.31000000000000E+0
2.31000000000000E+0      0.00000000000000E+0      0.00000000000000E+0
0.00000000000000E+0      0.00000000000000E+0
   BmDistLoadG              7     284      Z      1     2.31000000000000E+0
2.31000000000000E+0      0.00000000000000E+0      0.00000000000000E+0
0.00000000000000E+0      0.00000000000000E+0
   BmDistLoadG              7     285      Z      1     2.31000000000000E+0
2.31000000000000E+0      0.00000000000000E+0      0.00000000000000E+0
0.00000000000000E+0      0.00000000000000E+0
   BmDistLoadG              7     286      Z      1     2.31000000000000E+0
2.31000000000000E+0      0.00000000000000E+0      0.00000000000000E+0
0.00000000000000E+0      0.00000000000000E+0
   BmDistLoadG              7     287      Z      1     2.31000000000000E+0
2.31000000000000E+0      0.00000000000000E+0      0.00000000000000E+0
0.00000000000000E+0      0.00000000000000E+0
   BmDistLoadG              7     288      Z      1     2.31000000000000E+0
2.31000000000000E+0      0.00000000000000E+0      0.00000000000000E+0
0.00000000000000E+0      0.00000000000000E+0
   BmDistLoadG              7     289      Z      1     2.31000000000000E+0
2.31000000000000E+0      0.00000000000000E+0      0.00000000000000E+0
0.00000000000000E+0      0.00000000000000E+0
   BmDistLoadG              7     290      Z      1     2.31000000000000E+0
2.31000000000000E+0      0.00000000000000E+0      0.00000000000000E+0
```

```
0.00000000000000E+0      0.00000000000000E+0
   BmDistLoadG              7     291        Z      1     2.31000000000000E+0
2.31000000000000E+0      0.00000000000000E+0      0.00000000000000E+0
0.00000000000000E+0      0.00000000000000E+0
   BmDistLoadG              7     292        Z      1     2.31000000000000E+0
2.31000000000000E+0      0.00000000000000E+0      0.00000000000000E+0
0.00000000000000E+0      0.00000000000000E+0
   BmDistLoadG              7     293        Z      1     2.31000000000000E+0
2.31000000000000E+0      0.00000000000000E+0      0.00000000000000E+0
0.00000000000000E+0      0.00000000000000E+0
   BmDistLoadG              7     294        Z      1     2.31000000000000E+0
2.31000000000000E+0      0.00000000000000E+0      0.00000000000000E+0
0.00000000000000E+0      0.00000000000000E+0
   BmDistLoadG              7     295        Z      1     2.31000000000000E+0
2.31000000000000E+0      0.00000000000000E+0      0.00000000000000E+0
0.00000000000000E+0      0.00000000000000E+0
   BmDistLoadG              7     296        Z      1     2.31000000000000E+0
2.31000000000000E+0      0.00000000000000E+0      0.00000000000000E+0
0.00000000000000E+0      0.00000000000000E+0
   BmDistLoadG              7     297        Z      1     2.31000000000000E+0
2.31000000000000E+0      0.00000000000000E+0      0.00000000000000E+0
0.00000000000000E+0      0.00000000000000E+0
   BmDistLoadG              7     298        Z      1     2.31000000000000E+0
2.31000000000000E+0      0.00000000000000E+0      0.00000000000000E+0
0.00000000000000E+0      0.00000000000000E+0
   BmDistLoadG              7     299        Z      1     2.31000000000000E+0
2.31000000000000E+0      0.00000000000000E+0      0.00000000000000E+0
0.00000000000000E+0      0.00000000000000E+0
   BmDistLoadG              7     300        Z      1     2.31000000000000E+0
2.31000000000000E+0      0.00000000000000E+0      0.00000000000000E+0
0.00000000000000E+0      0.00000000000000E+0
   BmDistLoadG              7     301        Z      1     2.31000000000000E+0
2.31000000000000E+0      0.00000000000000E+0      0.00000000000000E+0
0.00000000000000E+0      0.00000000000000E+0
   BmDistLoadG              7     302        Z      1     2.31000000000000E+0
2.31000000000000E+0      0.00000000000000E+0      0.00000000000000E+0
0.00000000000000E+0      0.00000000000000E+0
   BmDistLoadG              7     303        Z      1     2.31000000000000E+0
2.31000000000000E+0      0.00000000000000E+0      0.00000000000000E+0
0.00000000000000E+0      0.00000000000000E+0
   BmDistLoadG              7     304        Z      1     2.31000000000000E+0
2.31000000000000E+0      0.00000000000000E+0      0.00000000000000E+0
0.00000000000000E+0      0.00000000000000E+0
   BmDistLoadG              7     305        Z      1     2.31000000000000E+0
2.31000000000000E+0      0.00000000000000E+0      0.00000000000000E+0
0.00000000000000E+0      0.00000000000000E+0
   BmDistLoadG              7     306        Z      1     2.31000000000000E+0
2.31000000000000E+0      0.00000000000000E+0      0.00000000000000E+0
0.00000000000000E+0      0.00000000000000E+0
   BmDistLoadG              7     307        Z      1     2.31000000000000E+0
2.31000000000000E+0      0.00000000000000E+0      0.00000000000000E+0
0.00000000000000E+0      0.00000000000000E+0
   BmDistLoadG              7     308        Z      1     2.31000000000000E+0
2.31000000000000E+0      0.00000000000000E+0      0.00000000000000E+0
```

```
0.00000000000000E+0      0.00000000000000E+0
   BmDistLoadG              7     309      Z      1     2.31000000000000E+0
2.31000000000000E+0      0.00000000000000E+0      0.00000000000000E+0
0.00000000000000E+0      0.00000000000000E+0
   BmDistLoadG              7     310      Z      1     2.31000000000000E+0
2.31000000000000E+0      0.00000000000000E+0      0.00000000000000E+0
0.00000000000000E+0      0.00000000000000E+0
   BmDistLoadG              7     311      Z      1     2.31000000000000E+0
2.31000000000000E+0      0.00000000000000E+0      0.00000000000000E+0
0.00000000000000E+0      0.00000000000000E+0
   BmDistLoadG              7     312      Z      1     2.31000000000000E+0
2.31000000000000E+0      0.00000000000000E+0      0.00000000000000E+0
0.00000000000000E+0      0.00000000000000E+0
   BmDistLoadG              7     313      Z      1     2.31000000000000E+0
2.31000000000000E+0      0.00000000000000E+0      0.00000000000000E+0
0.00000000000000E+0      0.00000000000000E+0
   BmDistLoadG              7     314      Z      1     2.31000000000000E+0
2.31000000000000E+0      0.00000000000000E+0      0.00000000000000E+0
0.00000000000000E+0      0.00000000000000E+0
   BmDistLoadG              7     315      Z      1     2.31000000000000E+0
2.31000000000000E+0      0.00000000000000E+0      0.00000000000000E+0
0.00000000000000E+0      0.00000000000000E+0
   BmDistLoadG              7     316      Z      1     2.31000000000000E+0
2.31000000000000E+0      0.00000000000000E+0      0.00000000000000E+0
0.00000000000000E+0      0.00000000000000E+0
   BmDistLoadG              7     317      Z      1     2.31000000000000E+0
2.31000000000000E+0      0.00000000000000E+0      0.00000000000000E+0
0.00000000000000E+0      0.00000000000000E+0
   BmDistLoadG              7     318      Z      1     2.31000000000000E+0
2.31000000000000E+0      0.00000000000000E+0      0.00000000000000E+0
0.00000000000000E+0      0.00000000000000E+0
   BmDistLoadG              7     319      Z      1     2.31000000000000E+0
2.31000000000000E+0      0.00000000000000E+0      0.00000000000000E+0
0.00000000000000E+0      0.00000000000000E+0
   BmDistLoadG              7     320      Z      1     2.31000000000000E+0
2.31000000000000E+0      0.00000000000000E+0      0.00000000000000E+0
0.00000000000000E+0      0.00000000000000E+0
   BmDistLoadG              7     321      Z      1     2.31000000000000E+0
2.31000000000000E+0      0.00000000000000E+0      0.00000000000000E+0
0.00000000000000E+0      0.00000000000000E+0
   BmDistLoadG              7     322      Z      1     2.31000000000000E+0
2.31000000000000E+0      0.00000000000000E+0      0.00000000000000E+0
0.00000000000000E+0      0.00000000000000E+0
   BmDistLoadG              7     323      Z      1     2.31000000000000E+0
2.31000000000000E+0      0.00000000000000E+0      0.00000000000000E+0
0.00000000000000E+0      0.00000000000000E+0
   BmDistLoadG              7     324      Z      1     2.31000000000000E+0
2.31000000000000E+0      0.00000000000000E+0      0.00000000000000E+0
0.00000000000000E+0      0.00000000000000E+0
   BmDistLoadG              7     325      Z      1     2.31000000000000E+0
2.31000000000000E+0      0.00000000000000E+0      0.00000000000000E+0
0.00000000000000E+0      0.00000000000000E+0
   BmDistLoadG              7     326      Z      1     2.31000000000000E+0
2.31000000000000E+0      0.00000000000000E+0      0.00000000000000E+0
```

```
0.00000000000000E+0      0.00000000000000E+0
   BmDistLoadG              7     327      Z      1     2.31000000000000E+0
2.31000000000000E+0      0.00000000000000E+0      0.00000000000000E+0
0.00000000000000E+0      0.00000000000000E+0
   BmDistLoadG              7     328      Z      1     2.31000000000000E+0
2.31000000000000E+0      0.00000000000000E+0      0.00000000000000E+0
0.00000000000000E+0      0.00000000000000E+0
   BmDistLoadG              7     329      Z      1     2.31000000000000E+0
2.31000000000000E+0      0.00000000000000E+0      0.00000000000000E+0
0.00000000000000E+0      0.00000000000000E+0
   BmDistLoadG              7     330      Z      1     2.31000000000000E+0
2.31000000000000E+0      0.00000000000000E+0      0.00000000000000E+0
0.00000000000000E+0      0.00000000000000E+0
   BmDistLoadG              7     331      Z      1     2.31000000000000E+0
2.31000000000000E+0      0.00000000000000E+0      0.00000000000000E+0
0.00000000000000E+0      0.00000000000000E+0
   BmDistLoadG              7     332      Z      1     2.31000000000000E+0
2.31000000000000E+0      0.00000000000000E+0      0.00000000000000E+0
0.00000000000000E+0      0.00000000000000E+0
   BmDistLoadG              7     333      Z      1     2.31000000000000E+0
2.31000000000000E+0      0.00000000000000E+0      0.00000000000000E+0
0.00000000000000E+0      0.00000000000000E+0
   BmDistLoadG              7     334      Z      1     2.31000000000000E+0
2.31000000000000E+0      0.00000000000000E+0      0.00000000000000E+0
0.00000000000000E+0      0.00000000000000E+0
   BmDistLoadG              7     335      Z      1     2.31000000000000E+0
2.31000000000000E+0      0.00000000000000E+0      0.00000000000000E+0
0.00000000000000E+0      0.00000000000000E+0
   BmDistLoadG              7     336      Z      1     2.31000000000000E+0
2.31000000000000E+0      0.00000000000000E+0      0.00000000000000E+0
0.00000000000000E+0      0.00000000000000E+0
   BmDistLoadG              7     337      Z      1     2.31000000000000E+0
2.31000000000000E+0      0.00000000000000E+0      0.00000000000000E+0
0.00000000000000E+0      0.00000000000000E+0
   BmDistLoadG              7     338      Z      1     2.31000000000000E+0
2.31000000000000E+0      0.00000000000000E+0      0.00000000000000E+0
0.00000000000000E+0      0.00000000000000E+0
   BmDistLoadG              7     339      Z      1     2.31000000000000E+0
2.31000000000000E+0      0.00000000000000E+0      0.00000000000000E+0
0.00000000000000E+0      0.00000000000000E+0
   BmDistLoadG              7     340      Z      1     2.31000000000000E+0
2.31000000000000E+0      0.00000000000000E+0      0.00000000000000E+0
0.00000000000000E+0      0.00000000000000E+0
   BmDistLoadG              7     341      Z      1     2.31000000000000E+0
2.31000000000000E+0      0.00000000000000E+0      0.00000000000000E+0
0.00000000000000E+0      0.00000000000000E+0
   BmDistLoadG              7     342      Z      1     2.31000000000000E+0
2.31000000000000E+0      0.00000000000000E+0      0.00000000000000E+0
0.00000000000000E+0      0.00000000000000E+0
   BmDistLoadG              7     343      Z      1     2.31000000000000E+0
2.31000000000000E+0      0.00000000000000E+0      0.00000000000000E+0
0.00000000000000E+0      0.00000000000000E+0
   BmDistLoadG              7     344      Z      1     2.31000000000000E+0
2.31000000000000E+0      0.00000000000000E+0      0.00000000000000E+0
```

```
0.00000000000000E+0      0.00000000000000E+0
   BmDistLoadG              7     345       Z      1     2.31000000000000E+0
2.31000000000000E+0      0.00000000000000E+0      0.00000000000000E+0
0.00000000000000E+0      0.00000000000000E+0
   BmDistLoadG              7     346       Z      1     2.31000000000000E+0
2.31000000000000E+0      0.00000000000000E+0      0.00000000000000E+0
0.00000000000000E+0      0.00000000000000E+0
   BmDistLoadG              7     347       Z      1     2.31000000000000E+0
2.31000000000000E+0      0.00000000000000E+0      0.00000000000000E+0
0.00000000000000E+0      0.00000000000000E+0
   BmDistLoadG              7     348       Z      1     2.31000000000000E+0
2.31000000000000E+0      0.00000000000000E+0      0.00000000000000E+0
0.00000000000000E+0      0.00000000000000E+0
   BmDistLoadG              7     349       Z      1     2.31000000000000E+0
2.31000000000000E+0      0.00000000000000E+0      0.00000000000000E+0
0.00000000000000E+0      0.00000000000000E+0
   BmDistLoadG              7     350       Z      1     2.31000000000000E+0
2.31000000000000E+0      0.00000000000000E+0      0.00000000000000E+0
0.00000000000000E+0      0.00000000000000E+0
   BmDistLoadG              7     351       Z      1     2.31000000000000E+0
2.31000000000000E+0      0.00000000000000E+0      0.00000000000000E+0
0.00000000000000E+0      0.00000000000000E+0
   BmDistLoadG              7     352       Z      1     2.31000000000000E+0
2.31000000000000E+0      0.00000000000000E+0      0.00000000000000E+0
0.00000000000000E+0      0.00000000000000E+0
   BmDistLoadG              7     353       Z      1     2.31000000000000E+0
2.31000000000000E+0      0.00000000000000E+0      0.00000000000000E+0
0.00000000000000E+0      0.00000000000000E+0
   BmDistLoadG              7     354       Z      1     2.31000000000000E+0
2.31000000000000E+0      0.00000000000000E+0      0.00000000000000E+0
0.00000000000000E+0      0.00000000000000E+0
   BmDistLoadG              7     355       Z      1     2.31000000000000E+0
2.31000000000000E+0      0.00000000000000E+0      0.00000000000000E+0
0.00000000000000E+0      0.00000000000000E+0
   BmDistLoadG              7     356       Z      1     2.31000000000000E+0
2.31000000000000E+0      0.00000000000000E+0      0.00000000000000E+0
0.00000000000000E+0      0.00000000000000E+0
   BmDistLoadG              7     357       Z      1     2.31000000000000E+0
2.31000000000000E+0      0.00000000000000E+0      0.00000000000000E+0
0.00000000000000E+0      0.00000000000000E+0
   BmDistLoadG              7     358       Z      1     2.31000000000000E+0
2.31000000000000E+0      0.00000000000000E+0      0.00000000000000E+0
0.00000000000000E+0      0.00000000000000E+0
   BmDistLoadG              7     359       Z      1     2.31000000000000E+0
2.31000000000000E+0      0.00000000000000E+0      0.00000000000000E+0
0.00000000000000E+0      0.00000000000000E+0
   BmDistLoadG              7     360       Z      1     2.31000000000000E+0
2.31000000000000E+0      0.00000000000000E+0      0.00000000000000E+0
0.00000000000000E+0      0.00000000000000E+0
   BmDistLoadG              7     361       Z      1     2.31000000000000E+0
2.31000000000000E+0      0.00000000000000E+0      0.00000000000000E+0
0.00000000000000E+0      0.00000000000000E+0
   BmDistLoadG              7     362       Z      1     2.31000000000000E+0
2.31000000000000E+0      0.00000000000000E+0      0.00000000000000E+0
```

```
0.00000000000000E+0      0.00000000000000E+0
   BmDistLoadG              7     363        Z      1     2.31000000000000E+0
2.31000000000000E+0      0.00000000000000E+0      0.00000000000000E+0
0.00000000000000E+0      0.00000000000000E+0
   BmDistLoadG              7     364        Z      1     2.31000000000000E+0
2.31000000000000E+0      0.00000000000000E+0      0.00000000000000E+0
0.00000000000000E+0      0.00000000000000E+0
   BmDistLoadG              7     365        Z      1     2.31000000000000E+0
2.31000000000000E+0      0.00000000000000E+0      0.00000000000000E+0
0.00000000000000E+0      0.00000000000000E+0
   BmDistLoadG              7     366        Z      1     2.31000000000000E+0
2.31000000000000E+0      0.00000000000000E+0      0.00000000000000E+0
0.00000000000000E+0      0.00000000000000E+0
   BmDistLoadG              7     367        Z      1     2.31000000000000E+0
2.31000000000000E+0      0.00000000000000E+0      0.00000000000000E+0
0.00000000000000E+0      0.00000000000000E+0
   BmDistLoadG              7     368        Z      1     2.31000000000000E+0
2.31000000000000E+0      0.00000000000000E+0      0.00000000000000E+0
0.00000000000000E+0      0.00000000000000E+0
   BmDistLoadG              7     369        Z      1     2.31000000000000E+0
2.31000000000000E+0      0.00000000000000E+0      0.00000000000000E+0
0.00000000000000E+0      0.00000000000000E+0
   BmDistLoadG              7     370        Z      1     2.31000000000000E+0
2.31000000000000E+0      0.00000000000000E+0      0.00000000000000E+0
0.00000000000000E+0      0.00000000000000E+0
   BmDistLoadG              7     371        Z      1     2.31000000000000E+0
2.31000000000000E+0      0.00000000000000E+0      0.00000000000000E+0
0.00000000000000E+0      0.00000000000000E+0
   BmDistLoadG              7     372        Z      1     2.31000000000000E+0
2.31000000000000E+0      0.00000000000000E+0      0.00000000000000E+0
0.00000000000000E+0      0.00000000000000E+0
   BmDistLoadG              7     373        Z      1     2.31000000000000E+0
2.31000000000000E+0      0.00000000000000E+0      0.00000000000000E+0
0.00000000000000E+0      0.00000000000000E+0
   BmDistLoadG              7     374        Z      1     2.31000000000000E+0
2.31000000000000E+0      0.00000000000000E+0      0.00000000000000E+0
0.00000000000000E+0      0.00000000000000E+0
   BmDistLoadG              7     375        Z      1     2.31000000000000E+0
2.31000000000000E+0      0.00000000000000E+0      0.00000000000000E+0
0.00000000000000E+0      0.00000000000000E+0
   BmDistLoadG              7     376        Z      1     2.31000000000000E+0
2.31000000000000E+0      0.00000000000000E+0      0.00000000000000E+0
0.00000000000000E+0      0.00000000000000E+0
   BmDistLoadG              7     377        Z      1     2.31000000000000E+0
2.31000000000000E+0      0.00000000000000E+0      0.00000000000000E+0
0.00000000000000E+0      0.00000000000000E+0
   BmDistLoadG              7     378        Z      1     2.31000000000000E+0
2.31000000000000E+0      0.00000000000000E+0      0.00000000000000E+0
0.00000000000000E+0      0.00000000000000E+0
   BmDistLoadG              7     379        Z      1     2.31000000000000E+0
2.31000000000000E+0      0.00000000000000E+0      0.00000000000000E+0
0.00000000000000E+0      0.00000000000000E+0
   BmDistLoadG              7     380        Z      1     2.31000000000000E+0
2.31000000000000E+0      0.00000000000000E+0      0.00000000000000E+0
```

```
0.00000000000000E+0      0.00000000000000E+0
   BmDistLoadG              7     381      Z      1     2.31000000000000E+0
2.31000000000000E+0      0.00000000000000E+0      0.00000000000000E+0
0.00000000000000E+0      0.00000000000000E+0
   BmDistLoadG              7     382      Z      1     2.31000000000000E+0
2.31000000000000E+0      0.00000000000000E+0      0.00000000000000E+0
0.00000000000000E+0      0.00000000000000E+0
   BmDistLoadG              7     383      Z      1     2.31000000000000E+0
2.31000000000000E+0      0.00000000000000E+0      0.00000000000000E+0
0.00000000000000E+0      0.00000000000000E+0
   BmDistLoadG              7     384      Z      1     2.31000000000000E+0
2.31000000000000E+0      0.00000000000000E+0      0.00000000000000E+0
0.00000000000000E+0      0.00000000000000E+0
   BmDistLoadG              7     385      Z      1     2.31000000000000E+0
2.31000000000000E+0      0.00000000000000E+0      0.00000000000000E+0
0.00000000000000E+0      0.00000000000000E+0
   BmDistLoadG              7     386      Z      1     2.31000000000000E+0
2.31000000000000E+0      0.00000000000000E+0      0.00000000000000E+0
0.00000000000000E+0      0.00000000000000E+0
   BmDistLoadG              7     387      Z      1     2.31000000000000E+0
2.31000000000000E+0      0.00000000000000E+0      0.00000000000000E+0
0.00000000000000E+0      0.00000000000000E+0
   BmDistLoadG              7     388      Z      1     2.31000000000000E+0
2.31000000000000E+0      0.00000000000000E+0      0.00000000000000E+0
0.00000000000000E+0      0.00000000000000E+0
   BmDistLoadG              7     389      Z      1     2.31000000000000E+0
2.31000000000000E+0      0.00000000000000E+0      0.00000000000000E+0
0.00000000000000E+0      0.00000000000000E+0
   BmDistLoadG              7     390      Z      1     2.31000000000000E+0
2.31000000000000E+0      0.00000000000000E+0      0.00000000000000E+0
0.00000000000000E+0      0.00000000000000E+0
   BmDistLoadG              7     391      Z      1     2.31000000000000E+0
2.31000000000000E+0      0.00000000000000E+0      0.00000000000000E+0
0.00000000000000E+0      0.00000000000000E+0
   BmDistLoadG              7     392      Z      1     2.31000000000000E+0
2.31000000000000E+0      0.00000000000000E+0      0.00000000000000E+0
0.00000000000000E+0      0.00000000000000E+0
   BmDistLoadG              7     393      Z      1     2.31000000000000E+0
2.31000000000000E+0      0.00000000000000E+0      0.00000000000000E+0
0.00000000000000E+0      0.00000000000000E+0
   BmDistLoadG              7     394      Z      1     2.31000000000000E+0
2.31000000000000E+0      0.00000000000000E+0      0.00000000000000E+0
0.00000000000000E+0      0.00000000000000E+0
   BmDistLoadG              7     395      Z      1     2.31000000000000E+0
2.31000000000000E+0      0.00000000000000E+0      0.00000000000000E+0
0.00000000000000E+0      0.00000000000000E+0
   BmDistLoadG              7     396      Z      1     2.31000000000000E+0
2.31000000000000E+0      0.00000000000000E+0      0.00000000000000E+0
0.00000000000000E+0      0.00000000000000E+0
   BmDistLoadG              7     397      Z      1     2.31000000000000E+0
2.31000000000000E+0      0.00000000000000E+0      0.00000000000000E+0
0.00000000000000E+0      0.00000000000000E+0
   BmDistLoadG              7     398      Z      1     2.31000000000000E+0
2.31000000000000E+0      0.00000000000000E+0      0.00000000000000E+0
```

```
0.00000000000000E+0      0.00000000000000E+0
   BmDistLoadG              7     399      Z      1     2.31000000000000E+0
2.31000000000000E+0      0.00000000000000E+0      0.00000000000000E+0
0.00000000000000E+0      0.00000000000000E+0
   BmDistLoadG              7     400      Z      1     2.31000000000000E+0
2.31000000000000E+0      0.00000000000000E+0      0.00000000000000E+0
0.00000000000000E+0      0.00000000000000E+0
   BmDistLoadG              7     401      Z      1     2.31000000000000E+0
2.31000000000000E+0      0.00000000000000E+0      0.00000000000000E+0
0.00000000000000E+0      0.00000000000000E+0
   BmDistLoadG              7     402      Z      1     2.31000000000000E+0
2.31000000000000E+0      0.00000000000000E+0      0.00000000000000E+0
0.00000000000000E+0      0.00000000000000E+0
   BmDistLoadG              7     403      Z      1     2.31000000000000E+0
2.31000000000000E+0      0.00000000000000E+0      0.00000000000000E+0
0.00000000000000E+0      0.00000000000000E+0
   BmDistLoadG              7     404      Z      1     2.31000000000000E+0
2.31000000000000E+0      0.00000000000000E+0      0.00000000000000E+0
0.00000000000000E+0      0.00000000000000E+0
   BmDistLoadG              7     405      Z      1     2.31000000000000E+0
2.31000000000000E+0      0.00000000000000E+0      0.00000000000000E+0
0.00000000000000E+0      0.00000000000000E+0
   BmDistLoadG              7     406      Z      1     2.31000000000000E+0
2.31000000000000E+0      0.00000000000000E+0      0.00000000000000E+0
0.00000000000000E+0      0.00000000000000E+0
   BmDistLoadG              7     407      Z      1     2.31000000000000E+0
2.31000000000000E+0      0.00000000000000E+0      0.00000000000000E+0
0.00000000000000E+0      0.00000000000000E+0
   BmDistLoadG              7     408      Z      1     2.31000000000000E+0
2.31000000000000E+0      0.00000000000000E+0      0.00000000000000E+0
0.00000000000000E+0      0.00000000000000E+0
   BmDistLoadG              7     409      Z      1     2.31000000000000E+0
2.31000000000000E+0      0.00000000000000E+0      0.00000000000000E+0
0.00000000000000E+0      0.00000000000000E+0
   BmDistLoadG              7     410      Z      1     2.31000000000000E+0
2.31000000000000E+0      0.00000000000000E+0      0.00000000000000E+0
0.00000000000000E+0      0.00000000000000E+0
   BmDistLoadG              7     411      Z      1     2.31000000000000E+0
2.31000000000000E+0      0.00000000000000E+0      0.00000000000000E+0
0.00000000000000E+0      0.00000000000000E+0
   BmDistLoadG              7     412      Z      1     2.31000000000000E+0
2.31000000000000E+0      0.00000000000000E+0      0.00000000000000E+0
0.00000000000000E+0      0.00000000000000E+0
   BmDistLoadG              7     413      Z      1     2.31000000000000E+0
2.31000000000000E+0      0.00000000000000E+0      0.00000000000000E+0
0.00000000000000E+0      0.00000000000000E+0
   BmDistLoadG              7     414      Z      1     2.31000000000000E+0
2.31000000000000E+0      0.00000000000000E+0      0.00000000000000E+0
0.00000000000000E+0      0.00000000000000E+0
   BmDistLoadG              7     415      Z      1     2.31000000000000E+0
2.31000000000000E+0      0.00000000000000E+0      0.00000000000000E+0
0.00000000000000E+0      0.00000000000000E+0
   BmDistLoadG              7     416      Z      1     2.31000000000000E+0
2.31000000000000E+0      0.00000000000000E+0      0.00000000000000E+0
```

```
0.00000000000000E+0      0.00000000000000E+0
   BmDistLoadG              7     417      Z      1     2.31000000000000E+0
2.31000000000000E+0      0.00000000000000E+0      0.00000000000000E+0
0.00000000000000E+0      0.00000000000000E+0
   BmDistLoadG              7     418      Z      1     2.31000000000000E+0
2.31000000000000E+0      0.00000000000000E+0      0.00000000000000E+0
0.00000000000000E+0      0.00000000000000E+0
   BmDistLoadG              7     419      Z      1     2.31000000000000E+0
2.31000000000000E+0      0.00000000000000E+0      0.00000000000000E+0
0.00000000000000E+0      0.00000000000000E+0
   BmDistLoadG              7     420      Z      1     2.31000000000000E+0
2.31000000000000E+0      0.00000000000000E+0      0.00000000000000E+0
0.00000000000000E+0      0.00000000000000E+0
   BmDistLoadG              7     421      Z      1     2.31000000000000E+0
2.31000000000000E+0      0.00000000000000E+0      0.00000000000000E+0
0.00000000000000E+0      0.00000000000000E+0
   BmDistLoadG              7     422      Z      1     2.31000000000000E+0
2.31000000000000E+0      0.00000000000000E+0      0.00000000000000E+0
0.00000000000000E+0      0.00000000000000E+0
   BmDistLoadG              7     423      Z      1     2.31000000000000E+0
2.31000000000000E+0      0.00000000000000E+0      0.00000000000000E+0
0.00000000000000E+0      0.00000000000000E+0
   BmDistLoadG              7     424      Z      1     2.31000000000000E+0
2.31000000000000E+0      0.00000000000000E+0      0.00000000000000E+0
0.00000000000000E+0      0.00000000000000E+0
   BmDistLoadG              7     425      Z      1     2.31000000000000E+0
2.31000000000000E+0      0.00000000000000E+0      0.00000000000000E+0
0.00000000000000E+0      0.00000000000000E+0
   BmDistLoadG              7     426      Z      1     2.31000000000000E+0
2.31000000000000E+0      0.00000000000000E+0      0.00000000000000E+0
0.00000000000000E+0      0.00000000000000E+0
   BmDistLoadG              7     427      Z      1     2.31000000000000E+0
2.31000000000000E+0      0.00000000000000E+0      0.00000000000000E+0
0.00000000000000E+0      0.00000000000000E+0
   BmDistLoadG              7     428      Z      1     2.31000000000000E+0
2.31000000000000E+0      0.00000000000000E+0      0.00000000000000E+0
0.00000000000000E+0      0.00000000000000E+0
   BmDistLoadG              7     429      Z      1     2.31000000000000E+0
2.31000000000000E+0      0.00000000000000E+0      0.00000000000000E+0
0.00000000000000E+0      0.00000000000000E+0
   BmDistLoadG              7     430      Z      1     2.31000000000000E+0
2.31000000000000E+0      0.00000000000000E+0      0.00000000000000E+0
0.00000000000000E+0      0.00000000000000E+0
   BmDistLoadG              7     431      Z      1     2.31000000000000E+0
2.31000000000000E+0      0.00000000000000E+0      0.00000000000000E+0
0.00000000000000E+0      0.00000000000000E+0
   BmDistLoadG              7     432      Z      1     2.31000000000000E+0
2.31000000000000E+0      0.00000000000000E+0      0.00000000000000E+0
0.00000000000000E+0      0.00000000000000E+0
   BmDistLoadG              7     433      Z      1     2.31000000000000E+0
2.31000000000000E+0      0.00000000000000E+0      0.00000000000000E+0
0.00000000000000E+0      0.00000000000000E+0
   BmDistLoadG              7     434      Y      1     3.30000000000000E+0
3.30000000000000E+0      0.00000000000000E+0      0.00000000000000E+0
```

```
0.00000000000000E+0       0.00000000000000E+0
   BmDistLoadG               7     435       Y        1      3.30000000000000E+0
3.30000000000000E+0       0.00000000000000E+0       0.00000000000000E+0
0.00000000000000E+0       0.00000000000000E+0
   BmDistLoadG               7     436       Y        1      3.30000000000000E+0
3.30000000000000E+0       0.00000000000000E+0       0.00000000000000E+0
0.00000000000000E+0       0.00000000000000E+0
   BmDistLoadG               7     437       Y        1      3.30000000000000E+0
3.30000000000000E+0       0.00000000000000E+0       0.00000000000000E+0
0.00000000000000E+0       0.00000000000000E+0
   BmDistLoadG               7     438       Y        1      3.30000000000000E+0
3.30000000000000E+0       0.00000000000000E+0       0.00000000000000E+0
0.00000000000000E+0       0.00000000000000E+0
   BmDistLoadG               7     559       Y        1      1.76000000000000E+0
1.76000000000000E+0       0.00000000000000E+0       0.00000000000000E+0
0.00000000000000E+0       0.00000000000000E+0
   BmDistLoadG               7     560       Y        1      1.76000000000000E+0
1.76000000000000E+0       0.00000000000000E+0       0.00000000000000E+0
0.00000000000000E+0       0.00000000000000E+0
   BmDistLoadG               7     561       Y        1      1.76000000000000E+0
1.76000000000000E+0       0.00000000000000E+0       0.00000000000000E+0
0.00000000000000E+0       0.00000000000000E+0
   BmDistLoadG               7     562       Y        1      1.76000000000000E+0
1.76000000000000E+0       0.00000000000000E+0       0.00000000000000E+0
0.00000000000000E+0       0.00000000000000E+0
   BmDistLoadG               7     563       Y        1      1.76000000000000E+0
1.76000000000000E+0       0.00000000000000E+0       0.00000000000000E+0
0.00000000000000E+0       0.00000000000000E+0
   BmDistLoadG               7     564       Y        1      1.76000000000000E+0
1.76000000000000E+0       0.00000000000000E+0       0.00000000000000E+0
0.00000000000000E+0       0.00000000000000E+0
   BmDistLoadG               7     565       Y        1      1.76000000000000E+0
1.76000000000000E+0       0.00000000000000E+0       0.00000000000000E+0
0.00000000000000E+0       0.00000000000000E+0
   BmDistLoadG               7     566       Y        1      1.76000000000000E+0
1.76000000000000E+0       0.00000000000000E+0       0.00000000000000E+0
0.00000000000000E+0       0.00000000000000E+0
   BmDistLoadG               7     567       Y        1      1.76000000000000E+0
1.76000000000000E+0       0.00000000000000E+0       0.00000000000000E+0
0.00000000000000E+0       0.00000000000000E+0
   BmDistLoadG               7     568       Y        1      1.76000000000000E+0
1.76000000000000E+0       0.00000000000000E+0       0.00000000000000E+0
0.00000000000000E+0       0.00000000000000E+0
   BmDistLoadG               7     569       Y        1      1.76000000000000E+0
1.76000000000000E+0       0.00000000000000E+0       0.00000000000000E+0
0.00000000000000E+0       0.00000000000000E+0
   BmDistLoadG               7     570       Y        1      1.76000000000000E+0
1.76000000000000E+0       0.00000000000000E+0       0.00000000000000E+0
0.00000000000000E+0       0.00000000000000E+0
   BmDistLoadG               7     571       Y        1      1.76000000000000E+0
1.76000000000000E+0       0.00000000000000E+0       0.00000000000000E+0
0.00000000000000E+0       0.00000000000000E+0
   BmDistLoadG               7     572       Y        1      1.76000000000000E+0
1.76000000000000E+0       0.00000000000000E+0       0.00000000000000E+0
```

```
0.00000000000000E+0      0.00000000000000E+0
   BmDistLoadG              7     573      Y      1     1.76000000000000E+0
1.76000000000000E+0      0.00000000000000E+0      0.00000000000000E+0
0.00000000000000E+0      0.00000000000000E+0
   BmDistLoadG              7     574      Y      1     1.76000000000000E+0
1.76000000000000E+0      0.00000000000000E+0      0.00000000000000E+0
0.00000000000000E+0      0.00000000000000E+0
   BmDistLoadG              7     575      Y      1     1.76000000000000E+0
1.76000000000000E+0      0.00000000000000E+0      0.00000000000000E+0
0.00000000000000E+0      0.00000000000000E+0
   BmDistLoadG              7     576      Y      1     1.76000000000000E+0
1.76000000000000E+0      0.00000000000000E+0      0.00000000000000E+0
0.00000000000000E+0      0.00000000000000E+0
   BmDistLoadG              7     577      Y      1     1.76000000000000E+0
1.76000000000000E+0      0.00000000000000E+0      0.00000000000000E+0
0.00000000000000E+0      0.00000000000000E+0
   BmDistLoadG              7     578      Y      1     1.76000000000000E+0
1.76000000000000E+0      0.00000000000000E+0      0.00000000000000E+0
0.00000000000000E+0      0.00000000000000E+0
   BmDistLoadG              7     579      Y      1     1.76000000000000E+0
1.76000000000000E+0      0.00000000000000E+0      0.00000000000000E+0
0.00000000000000E+0      0.00000000000000E+0
   BmDistLoadG              7     580      Y      1     1.76000000000000E+0
1.76000000000000E+0      0.00000000000000E+0      0.00000000000000E+0
0.00000000000000E+0      0.00000000000000E+0
   BmDistLoadG              7     581      Y      1     1.76000000000000E+0
1.76000000000000E+0      0.00000000000000E+0      0.00000000000000E+0
0.00000000000000E+0      0.00000000000000E+0
   BmDistLoadG              7     582      Y      1     1.76000000000000E+0
1.76000000000000E+0      0.00000000000000E+0      0.00000000000000E+0
0.00000000000000E+0      0.00000000000000E+0
   BmDistLoadG              7     583      Y      1     1.76000000000000E+0
1.76000000000000E+0      0.00000000000000E+0      0.00000000000000E+0
0.00000000000000E+0      0.00000000000000E+0
   BmDistLoadG              7     584      Y      1     1.76000000000000E+0
1.76000000000000E+0      0.00000000000000E+0      0.00000000000000E+0
0.00000000000000E+0      0.00000000000000E+0
   BmDistLoadG              7     585      Y      1     1.76000000000000E+0
1.76000000000000E+0      0.00000000000000E+0      0.00000000000000E+0
0.00000000000000E+0      0.00000000000000E+0
   BmDistLoadG              7     586      Y      1     1.76000000000000E+0
1.76000000000000E+0      0.00000000000000E+0      0.00000000000000E+0
0.00000000000000E+0      0.00000000000000E+0
   BmDistLoadG              7     587      Y      1     1.76000000000000E+0
1.76000000000000E+0      0.00000000000000E+0      0.00000000000000E+0
0.00000000000000E+0      0.00000000000000E+0
   BmDistLoadG              7     588      Y      1     1.76000000000000E+0
1.76000000000000E+0      0.00000000000000E+0      0.00000000000000E+0
0.00000000000000E+0      0.00000000000000E+0
   BmDistLoadG              7     589      Y      1     1.76000000000000E+0
1.76000000000000E+0      0.00000000000000E+0      0.00000000000000E+0
0.00000000000000E+0      0.00000000000000E+0
   BmDistLoadG              7     590      Y      1     1.76000000000000E+0
1.76000000000000E+0      0.00000000000000E+0      0.00000000000000E+0
```

```
0.00000000000000E+0      0.00000000000000E+0
   BmDistLoadG              7     591       Y        1     1.76000000000000E+0
1.76000000000000E+0      0.00000000000000E+0      0.00000000000000E+0
0.00000000000000E+0      0.00000000000000E+0
   BmDistLoadG              7     592       Y        1     1.76000000000000E+0
1.76000000000000E+0      0.00000000000000E+0      0.00000000000000E+0
0.00000000000000E+0      0.00000000000000E+0
   BmDistLoadG              7     593       Y        1     1.76000000000000E+0
1.76000000000000E+0      0.00000000000000E+0      0.00000000000000E+0
0.00000000000000E+0      0.00000000000000E+0
   BmDistLoadG              7     594       Y        1     1.76000000000000E+0
1.76000000000000E+0      0.00000000000000E+0      0.00000000000000E+0
0.00000000000000E+0      0.00000000000000E+0
   BmDistLoadG              7     595       Y        1     1.76000000000000E+0
1.76000000000000E+0      0.00000000000000E+0      0.00000000000000E+0
0.00000000000000E+0      0.00000000000000E+0
   BmDistLoadG              7     596       Y        1     1.76000000000000E+0
1.76000000000000E+0      0.00000000000000E+0      0.00000000000000E+0
0.00000000000000E+0      0.00000000000000E+0
   BmDistLoadG              7     597       Y        1     1.76000000000000E+0
1.76000000000000E+0      0.00000000000000E+0      0.00000000000000E+0
0.00000000000000E+0      0.00000000000000E+0
   BmDistLoadG              7     598       Y        1     1.76000000000000E+0
1.76000000000000E+0      0.00000000000000E+0      0.00000000000000E+0
0.00000000000000E+0      0.00000000000000E+0
   BmDistLoadG              7     599       Y        1     1.76000000000000E+0
1.76000000000000E+0      0.00000000000000E+0      0.00000000000000E+0
0.00000000000000E+0      0.00000000000000E+0
   BmDistLoadG              7     600       Y        1     1.76000000000000E+0
1.76000000000000E+0      0.00000000000000E+0      0.00000000000000E+0
0.00000000000000E+0      0.00000000000000E+0
   BmDistLoadG              7     601       Y        1     1.76000000000000E+0
1.76000000000000E+0      0.00000000000000E+0      0.00000000000000E+0
0.00000000000000E+0      0.00000000000000E+0
   BmDistLoadG              7     602       Y        1     1.76000000000000E+0
1.76000000000000E+0      0.00000000000000E+0      0.00000000000000E+0
0.00000000000000E+0      0.00000000000000E+0
   BmDistLoadG              7     603       Y        1     1.76000000000000E+0
1.76000000000000E+0      0.00000000000000E+0      0.00000000000000E+0
0.00000000000000E+0      0.00000000000000E+0
   BmDistLoadG              7     604       Y        1     1.76000000000000E+0
1.76000000000000E+0      0.00000000000000E+0      0.00000000000000E+0
0.00000000000000E+0      0.00000000000000E+0
   BmDistLoadG              7     605       Y        1     1.76000000000000E+0
1.76000000000000E+0      0.00000000000000E+0      0.00000000000000E+0
0.00000000000000E+0      0.00000000000000E+0
   BmDistLoadG              7     606       Y        1     1.76000000000000E+0
1.76000000000000E+0      0.00000000000000E+0      0.00000000000000E+0
0.00000000000000E+0      0.00000000000000E+0
   BmDistLoadG              7     607       Y        1     1.76000000000000E+0
1.76000000000000E+0      0.00000000000000E+0      0.00000000000000E+0
0.00000000000000E+0      0.00000000000000E+0
   BmDistLoadG              7     608       Y        1     1.76000000000000E+0
1.76000000000000E+0      0.00000000000000E+0      0.00000000000000E+0
```

```
0.00000000000000E+0      0.00000000000000E+0
   BmDistLoadG              7     609      Y      1     1.76000000000000E+0
1.76000000000000E+0      0.00000000000000E+0      0.00000000000000E+0
0.00000000000000E+0      0.00000000000000E+0
   BmDistLoadG              7     610      Y      1     1.76000000000000E+0
1.76000000000000E+0      0.00000000000000E+0      0.00000000000000E+0
0.00000000000000E+0      0.00000000000000E+0
   BmDistLoadG              7     611      Y      1     1.76000000000000E+0
1.76000000000000E+0      0.00000000000000E+0      0.00000000000000E+0
0.00000000000000E+0      0.00000000000000E+0
   BmDistLoadG              7     612      Y      1     1.76000000000000E+0
1.76000000000000E+0      0.00000000000000E+0      0.00000000000000E+0
0.00000000000000E+0      0.00000000000000E+0
   BmDistLoadG              7     613      Y      1     1.76000000000000E+0
1.76000000000000E+0      0.00000000000000E+0      0.00000000000000E+0
0.00000000000000E+0      0.00000000000000E+0
   BmDistLoadG              7     614      Y      1     1.76000000000000E+0
1.76000000000000E+0      0.00000000000000E+0      0.00000000000000E+0
0.00000000000000E+0      0.00000000000000E+0
   BmDistLoadG              7     649      Z      1     1.15500000000000E+0
1.15500000000000E+0      0.00000000000000E+0      0.00000000000000E+0
0.00000000000000E+0      0.00000000000000E+0
   BmDistLoadG              7     650      Z      1     1.15500000000000E+0
1.15500000000000E+0      0.00000000000000E+0      0.00000000000000E+0
0.00000000000000E+0      0.00000000000000E+0
   BmDistLoadG              7     651      Z      1     1.15500000000000E+0
1.15500000000000E+0      0.00000000000000E+0      0.00000000000000E+0
0.00000000000000E+0      0.00000000000000E+0
   BmDistLoadG              7     652      Z      1     1.15500000000000E+0
1.15500000000000E+0      0.00000000000000E+0      0.00000000000000E+0
0.00000000000000E+0      0.00000000000000E+0
   BmDistLoadG              7     653      Z      1     2.31000000000000E+0
2.31000000000000E+0      0.00000000000000E+0      0.00000000000000E+0
0.00000000000000E+0      0.00000000000000E+0
   BmDistLoadG              7     654      Z      1     2.31000000000000E+0
2.31000000000000E+0      0.00000000000000E+0      0.00000000000000E+0
0.00000000000000E+0      0.00000000000000E+0
   BmDistLoadG              7     655      Z      1     2.31000000000000E+0
2.31000000000000E+0      0.00000000000000E+0      0.00000000000000E+0
0.00000000000000E+0      0.00000000000000E+0
   BmDistLoadG              7     656      Z      1     2.31000000000000E+0
2.31000000000000E+0      0.00000000000000E+0      0.00000000000000E+0
0.00000000000000E+0      0.00000000000000E+0
   BmDistLoadG              7     657      Z      1     2.31000000000000E+0
2.31000000000000E+0      0.00000000000000E+0      0.00000000000000E+0
0.00000000000000E+0      0.00000000000000E+0
   BmDistLoadG              7     658      Z      1     2.31000000000000E+0
2.31000000000000E+0      0.00000000000000E+0      0.00000000000000E+0
0.00000000000000E+0      0.00000000000000E+0
   BmDistLoadG              7     659      Z      1     2.31000000000000E+0
2.31000000000000E+0      0.00000000000000E+0      0.00000000000000E+0
0.00000000000000E+0      0.00000000000000E+0
   BmDistLoadG              7     660      Z      1     2.31000000000000E+0
2.31000000000000E+0      0.00000000000000E+0      0.00000000000000E+0
```

```
0.00000000000000E+0      0.00000000000000E+0
   BmDistLoadG              7     661      Z      1     2.31000000000000E+0
2.31000000000000E+0      0.00000000000000E+0      0.00000000000000E+0
0.00000000000000E+0      0.00000000000000E+0
   BmDistLoadG              7     662      Z      1     2.31000000000000E+0
2.31000000000000E+0      0.00000000000000E+0      0.00000000000000E+0
0.00000000000000E+0      0.00000000000000E+0
   BmDistLoadG              7     663      Z      1     2.31000000000000E+0
2.31000000000000E+0      0.00000000000000E+0      0.00000000000000E+0
0.00000000000000E+0      0.00000000000000E+0
   BmDistLoadG              7     664      Z      1     2.31000000000000E+0
2.31000000000000E+0      0.00000000000000E+0      0.00000000000000E+0
0.00000000000000E+0      0.00000000000000E+0
   BmDistLoadG              7     665      Z      1     2.31000000000000E+0
2.31000000000000E+0      0.00000000000000E+0      0.00000000000000E+0
0.00000000000000E+0      0.00000000000000E+0
   BmDistLoadG              7     666      Z      1     2.31000000000000E+0
2.31000000000000E+0      0.00000000000000E+0      0.00000000000000E+0
0.00000000000000E+0      0.00000000000000E+0
   BmDistLoadG              7     667      Z      1     2.31000000000000E+0
2.31000000000000E+0      0.00000000000000E+0      0.00000000000000E+0
0.00000000000000E+0      0.00000000000000E+0
   BmDistLoadG              7     668      Z      1     2.31000000000000E+0
2.31000000000000E+0      0.00000000000000E+0      0.00000000000000E+0
0.00000000000000E+0      0.00000000000000E+0

/ ______________________________________________________________________________
/ BEAM GLOBAL DISTRIBUTED LOADS
/ Q02b - Carico Vento Y-
   BmDistLoadG              9      13      Z      1     1.15500000000000E+0
1.15500000000000E+0      0.00000000000000E+0      0.00000000000000E+0
0.00000000000000E+0      0.00000000000000E+0
   BmDistLoadG              9      14      Z      1     2.31000000000000E+0
2.31000000000000E+0      0.00000000000000E+0      0.00000000000000E+0
0.00000000000000E+0      0.00000000000000E+0
   BmDistLoadG              9      15      Z      1     2.31000000000000E+0
2.31000000000000E+0      0.00000000000000E+0      0.00000000000000E+0
0.00000000000000E+0      0.00000000000000E+0
   BmDistLoadG              9      16      Z      1     2.31000000000000E+0
2.31000000000000E+0      0.00000000000000E+0      0.00000000000000E+0
0.00000000000000E+0      0.00000000000000E+0
   BmDistLoadG              9      17      Z      1     2.31000000000000E+0
2.31000000000000E+0      0.00000000000000E+0      0.00000000000000E+0
0.00000000000000E+0      0.00000000000000E+0
   BmDistLoadG              9      18      Z      1     2.31000000000000E+0
2.31000000000000E+0      0.00000000000000E+0      0.00000000000000E+0
0.00000000000000E+0      0.00000000000000E+0
   BmDistLoadG              9      19      Z      1     2.31000000000000E+0
2.31000000000000E+0      0.00000000000000E+0      0.00000000000000E+0
0.00000000000000E+0      0.00000000000000E+0
   BmDistLoadG              9      20      Z      1     2.31000000000000E+0
2.31000000000000E+0      0.00000000000000E+0      0.00000000000000E+0
0.00000000000000E+0      0.00000000000000E+0
   BmDistLoadG              9      21      Z      1     2.31000000000000E+0
```

```
2.31000000000000E+0      0.00000000000000E+0      0.00000000000000E+0
0.00000000000000E+0      0.00000000000000E+0
   BmDistLoadG              9      22       Z      1     1.15500000000000E+0
1.15500000000000E+0      0.00000000000000E+0      0.00000000000000E+0
0.00000000000000E+0      0.00000000000000E+0
   BmDistLoadG              9      69       Y      1    -1.65000000000000E+0
-1.65000000000000E+0      0.00000000000000E+0      0.00000000000000E+0
0.00000000000000E+0      0.00000000000000E+0
   BmDistLoadG              9      70       Y      1    -1.65000000000000E+0
-1.65000000000000E+0      0.00000000000000E+0      0.00000000000000E+0
0.00000000000000E+0      0.00000000000000E+0
   BmDistLoadG              9      71       Y      1    -1.65000000000000E+0
-1.65000000000000E+0      0.00000000000000E+0      0.00000000000000E+0
0.00000000000000E+0      0.00000000000000E+0
   BmDistLoadG              9      72       Y      1    -1.65000000000000E+0
-1.65000000000000E+0      0.00000000000000E+0      0.00000000000000E+0
0.00000000000000E+0      0.00000000000000E+0
   BmDistLoadG              9      73       Y      1    -1.65000000000000E+0
-1.65000000000000E+0      0.00000000000000E+0      0.00000000000000E+0
0.00000000000000E+0      0.00000000000000E+0
   BmDistLoadG              9      74       Y      1    -3.30000000000000E+0
-3.30000000000000E+0      0.00000000000000E+0      0.00000000000000E+0
0.00000000000000E+0      0.00000000000000E+0
   BmDistLoadG              9      75       Y      1    -3.30000000000000E+0
-3.30000000000000E+0      0.00000000000000E+0      0.00000000000000E+0
0.00000000000000E+0      0.00000000000000E+0
   BmDistLoadG              9      76       Y      1    -3.30000000000000E+0
-3.30000000000000E+0      0.00000000000000E+0      0.00000000000000E+0
0.00000000000000E+0      0.00000000000000E+0
   BmDistLoadG              9      77       Y      1    -3.30000000000000E+0
-3.30000000000000E+0      0.00000000000000E+0      0.00000000000000E+0
0.00000000000000E+0      0.00000000000000E+0
   BmDistLoadG              9      78       Y      1    -3.30000000000000E+0
-3.30000000000000E+0      0.00000000000000E+0      0.00000000000000E+0
0.00000000000000E+0      0.00000000000000E+0
   BmDistLoadG              9      79       Y      1    -3.30000000000000E+0
-3.30000000000000E+0      0.00000000000000E+0      0.00000000000000E+0
0.00000000000000E+0      0.00000000000000E+0
   BmDistLoadG              9      80       Y      1    -3.30000000000000E+0
-3.30000000000000E+0      0.00000000000000E+0      0.00000000000000E+0
0.00000000000000E+0      0.00000000000000E+0
   BmDistLoadG              9      81       Y      1    -3.30000000000000E+0
-3.30000000000000E+0      0.00000000000000E+0      0.00000000000000E+0
0.00000000000000E+0      0.00000000000000E+0
   BmDistLoadG              9      82       Y      1    -3.30000000000000E+0
-3.30000000000000E+0      0.00000000000000E+0      0.00000000000000E+0
0.00000000000000E+0      0.00000000000000E+0
   BmDistLoadG              9      83       Y      1    -3.30000000000000E+0
-3.30000000000000E+0      0.00000000000000E+0      0.00000000000000E+0
0.00000000000000E+0      0.00000000000000E+0
   BmDistLoadG              9      84       Y      1    -3.30000000000000E+0
-3.30000000000000E+0      0.00000000000000E+0      0.00000000000000E+0
0.00000000000000E+0      0.00000000000000E+0
   BmDistLoadG              9      85       Y      1    -3.30000000000000E+0
```

-3.30000000000000E+0 0.00000000000000E+0 0.00000000000000E+0
0.00000000000000E+0 0.00000000000000E+0
BmDistLoadG 9 86 Y 1 -3.30000000000000E+0
-3.30000000000000E+0 0.00000000000000E+0 0.00000000000000E+0
0.00000000000000E+0 0.00000000000000E+0
BmDistLoadG 9 87 Y 1 -3.30000000000000E+0
-3.30000000000000E+0 0.00000000000000E+0 0.00000000000000E+0
0.00000000000000E+0 0.00000000000000E+0
BmDistLoadG 9 88 Y 1 -3.30000000000000E+0
-3.30000000000000E+0 0.00000000000000E+0 0.00000000000000E+0
0.00000000000000E+0 0.00000000000000E+0
BmDistLoadG 9 89 Y 1 -3.30000000000000E+0
-3.30000000000000E+0 0.00000000000000E+0 0.00000000000000E+0
0.00000000000000E+0 0.00000000000000E+0
BmDistLoadG 9 90 Y 1 -3.30000000000000E+0
-3.30000000000000E+0 0.00000000000000E+0 0.00000000000000E+0
0.00000000000000E+0 0.00000000000000E+0
BmDistLoadG 9 91 Y 1 -3.30000000000000E+0
-3.30000000000000E+0 0.00000000000000E+0 0.00000000000000E+0
0.00000000000000E+0 0.00000000000000E+0
BmDistLoadG 9 92 Y 1 -3.30000000000000E+0
-3.30000000000000E+0 0.00000000000000E+0 0.00000000000000E+0
0.00000000000000E+0 0.00000000000000E+0
BmDistLoadG 9 93 Y 1 -3.30000000000000E+0
-3.30000000000000E+0 0.00000000000000E+0 0.00000000000000E+0
0.00000000000000E+0 0.00000000000000E+0
BmDistLoadG 9 94 Y 1 -3.30000000000000E+0
-3.30000000000000E+0 0.00000000000000E+0 0.00000000000000E+0
0.00000000000000E+0 0.00000000000000E+0
BmDistLoadG 9 95 Y 1 -3.30000000000000E+0
-3.30000000000000E+0 0.00000000000000E+0 0.00000000000000E+0
0.00000000000000E+0 0.00000000000000E+0
BmDistLoadG 9 96 Y 1 -3.30000000000000E+0
-3.30000000000000E+0 0.00000000000000E+0 0.00000000000000E+0
0.00000000000000E+0 0.00000000000000E+0
BmDistLoadG 9 97 Y 1 -3.30000000000000E+0
-3.30000000000000E+0 0.00000000000000E+0 0.00000000000000E+0
0.00000000000000E+0 0.00000000000000E+0
BmDistLoadG 9 98 Y 1 -3.30000000000000E+0
-3.30000000000000E+0 0.00000000000000E+0 0.00000000000000E+0
0.00000000000000E+0 0.00000000000000E+0
BmDistLoadG 9 99 Y 1 -3.30000000000000E+0
-3.30000000000000E+0 0.00000000000000E+0 0.00000000000000E+0
0.00000000000000E+0 0.00000000000000E+0
BmDistLoadG 9 100 Y 1 -3.30000000000000E+0
-3.30000000000000E+0 0.00000000000000E+0 0.00000000000000E+0
0.00000000000000E+0 0.00000000000000E+0
BmDistLoadG 9 101 Y 1 -3.30000000000000E+0
-3.30000000000000E+0 0.00000000000000E+0 0.00000000000000E+0
0.00000000000000E+0 0.00000000000000E+0
BmDistLoadG 9 102 Y 1 -3.30000000000000E+0
-3.30000000000000E+0 0.00000000000000E+0 0.00000000000000E+0
0.00000000000000E+0 0.00000000000000E+0
BmDistLoadG 9 103 Y 1 -3.30000000000000E+0

-3.30000000000000E+0 0.00000000000000E+0 0.00000000000000E+0
0.00000000000000E+0 0.00000000000000E+0
BmDistLoadG 9 104 Y 1 -3.30000000000000E+0
-3.30000000000000E+0 0.00000000000000E+0 0.00000000000000E+0
0.00000000000000E+0 0.00000000000000E+0
BmDistLoadG 9 105 Y 1 -3.30000000000000E+0
-3.30000000000000E+0 0.00000000000000E+0 0.00000000000000E+0
0.00000000000000E+0 0.00000000000000E+0
BmDistLoadG 9 106 Y 1 -3.30000000000000E+0
-3.30000000000000E+0 0.00000000000000E+0 0.00000000000000E+0
0.00000000000000E+0 0.00000000000000E+0
BmDistLoadG 9 107 Y 1 -3.30000000000000E+0
-3.30000000000000E+0 0.00000000000000E+0 0.00000000000000E+0
0.00000000000000E+0 0.00000000000000E+0
BmDistLoadG 9 108 Y 1 -3.30000000000000E+0
-3.30000000000000E+0 0.00000000000000E+0 0.00000000000000E+0
0.00000000000000E+0 0.00000000000000E+0
BmDistLoadG 9 109 Y 1 -3.30000000000000E+0
-3.30000000000000E+0 0.00000000000000E+0 0.00000000000000E+0
0.00000000000000E+0 0.00000000000000E+0
BmDistLoadG 9 110 Y 1 -3.30000000000000E+0
-3.30000000000000E+0 0.00000000000000E+0 0.00000000000000E+0
0.00000000000000E+0 0.00000000000000E+0
BmDistLoadG 9 111 Y 1 -3.30000000000000E+0
-3.30000000000000E+0 0.00000000000000E+0 0.00000000000000E+0
0.00000000000000E+0 0.00000000000000E+0
BmDistLoadG 9 112 Y 1 -3.30000000000000E+0
-3.30000000000000E+0 0.00000000000000E+0 0.00000000000000E+0
0.00000000000000E+0 0.00000000000000E+0
BmDistLoadG 9 113 Y 1 -3.30000000000000E+0
-3.30000000000000E+0 0.00000000000000E+0 0.00000000000000E+0
0.00000000000000E+0 0.00000000000000E+0
BmDistLoadG 9 114 Y 1 -1.65000000000000E+0
-1.65000000000000E+0 0.00000000000000E+0 0.00000000000000E+0
0.00000000000000E+0 0.00000000000000E+0
BmDistLoadG 9 115 Y 1 -1.65000000000000E+0
-1.65000000000000E+0 0.00000000000000E+0 0.00000000000000E+0
0.00000000000000E+0 0.00000000000000E+0
BmDistLoadG 9 116 Y 1 -1.65000000000000E+0
-1.65000000000000E+0 0.00000000000000E+0 0.00000000000000E+0
0.00000000000000E+0 0.00000000000000E+0
BmDistLoadG 9 117 Y 1 -1.65000000000000E+0
-1.65000000000000E+0 0.00000000000000E+0 0.00000000000000E+0
0.00000000000000E+0 0.00000000000000E+0
BmDistLoadG 9 118 Y 1 -1.65000000000000E+0
-1.65000000000000E+0 0.00000000000000E+0 0.00000000000000E+0
0.00000000000000E+0 0.00000000000000E+0
BmDistLoadG 9 119 Y 1 -1.65000000000000E+0
-1.65000000000000E+0 0.00000000000000E+0 0.00000000000000E+0
0.00000000000000E+0 0.00000000000000E+0
BmDistLoadG 9 120 Y 1 -1.65000000000000E+0
-1.65000000000000E+0 0.00000000000000E+0 0.00000000000000E+0
0.00000000000000E+0 0.00000000000000E+0
BmDistLoadG 9 121 Y 1 -1.65000000000000E+0

-1.65000000000000E+0 0.00000000000000E+0 0.00000000000000E+0
0.00000000000000E+0 0.00000000000000E+0
BmDistLoadG 9 122 Y 1 -1.65000000000000E+0
-1.65000000000000E+0 0.00000000000000E+0 0.00000000000000E+0
0.00000000000000E+0 0.00000000000000E+0
BmDistLoadG 9 123 Y 1 -1.65000000000000E+0
-1.65000000000000E+0 0.00000000000000E+0 0.00000000000000E+0
0.00000000000000E+0 0.00000000000000E+0
BmDistLoadG 9 124 Y 1 -3.30000000000000E+0
-3.30000000000000E+0 0.00000000000000E+0 0.00000000000000E+0
0.00000000000000E+0 0.00000000000000E+0
BmDistLoadG 9 125 Y 1 -3.30000000000000E+0
-3.30000000000000E+0 0.00000000000000E+0 0.00000000000000E+0
0.00000000000000E+0 0.00000000000000E+0
BmDistLoadG 9 126 Y 1 -3.30000000000000E+0
-3.30000000000000E+0 0.00000000000000E+0 0.00000000000000E+0
0.00000000000000E+0 0.00000000000000E+0
BmDistLoadG 9 127 Y 1 -3.30000000000000E+0
-3.30000000000000E+0 0.00000000000000E+0 0.00000000000000E+0
0.00000000000000E+0 0.00000000000000E+0
BmDistLoadG 9 128 Y 1 -3.30000000000000E+0
-3.30000000000000E+0 0.00000000000000E+0 0.00000000000000E+0
0.00000000000000E+0 0.00000000000000E+0
BmDistLoadG 9 129 Y 1 -3.30000000000000E+0
-3.30000000000000E+0 0.00000000000000E+0 0.00000000000000E+0
0.00000000000000E+0 0.00000000000000E+0
BmDistLoadG 9 130 Y 1 -3.30000000000000E+0
-3.30000000000000E+0 0.00000000000000E+0 0.00000000000000E+0
0.00000000000000E+0 0.00000000000000E+0
BmDistLoadG 9 131 Y 1 -3.30000000000000E+0
-3.30000000000000E+0 0.00000000000000E+0 0.00000000000000E+0
0.00000000000000E+0 0.00000000000000E+0
BmDistLoadG 9 132 Y 1 -3.30000000000000E+0
-3.30000000000000E+0 0.00000000000000E+0 0.00000000000000E+0
0.00000000000000E+0 0.00000000000000E+0
BmDistLoadG 9 133 Y 1 -3.30000000000000E+0
-3.30000000000000E+0 0.00000000000000E+0 0.00000000000000E+0
0.00000000000000E+0 0.00000000000000E+0
BmDistLoadG 9 134 Y 1 -3.30000000000000E+0
-3.30000000000000E+0 0.00000000000000E+0 0.00000000000000E+0
0.00000000000000E+0 0.00000000000000E+0
BmDistLoadG 9 135 Y 1 -3.30000000000000E+0
-3.30000000000000E+0 0.00000000000000E+0 0.00000000000000E+0
0.00000000000000E+0 0.00000000000000E+0
BmDistLoadG 9 136 Y 1 -3.30000000000000E+0
-3.30000000000000E+0 0.00000000000000E+0 0.00000000000000E+0
0.00000000000000E+0 0.00000000000000E+0
BmDistLoadG 9 137 Y 1 -3.30000000000000E+0
-3.30000000000000E+0 0.00000000000000E+0 0.00000000000000E+0
0.00000000000000E+0 0.00000000000000E+0
BmDistLoadG 9 138 Y 1 -3.30000000000000E+0
-3.30000000000000E+0 0.00000000000000E+0 0.00000000000000E+0
0.00000000000000E+0 0.00000000000000E+0
BmDistLoadG 9 139 Y 1 -3.30000000000000E+0

-3.30000000000000E+0 0.00000000000000E+0 0.00000000000000E+0
0.00000000000000E+0 0.00000000000000E+0
BmDistLoadG 9 140 Y 1 -3.30000000000000E+0
-3.30000000000000E+0 0.00000000000000E+0 0.00000000000000E+0
0.00000000000000E+0 0.00000000000000E+0
BmDistLoadG 9 141 Y 1 -3.30000000000000E+0
-3.30000000000000E+0 0.00000000000000E+0 0.00000000000000E+0
0.00000000000000E+0 0.00000000000000E+0
BmDistLoadG 9 142 Y 1 -3.30000000000000E+0
-3.30000000000000E+0 0.00000000000000E+0 0.00000000000000E+0
0.00000000000000E+0 0.00000000000000E+0
BmDistLoadG 9 143 Y 1 -3.30000000000000E+0
-3.30000000000000E+0 0.00000000000000E+0 0.00000000000000E+0
0.00000000000000E+0 0.00000000000000E+0
BmDistLoadG 9 144 Y 1 -3.30000000000000E+0
-3.30000000000000E+0 0.00000000000000E+0 0.00000000000000E+0
0.00000000000000E+0 0.00000000000000E+0
BmDistLoadG 9 145 Y 1 -3.30000000000000E+0
-3.30000000000000E+0 0.00000000000000E+0 0.00000000000000E+0
0.00000000000000E+0 0.00000000000000E+0
BmDistLoadG 9 146 Y 1 -3.30000000000000E+0
-3.30000000000000E+0 0.00000000000000E+0 0.00000000000000E+0
0.00000000000000E+0 0.00000000000000E+0
BmDistLoadG 9 147 Y 1 -3.30000000000000E+0
-3.30000000000000E+0 0.00000000000000E+0 0.00000000000000E+0
0.00000000000000E+0 0.00000000000000E+0
BmDistLoadG 9 148 Y 1 -3.30000000000000E+0
-3.30000000000000E+0 0.00000000000000E+0 0.00000000000000E+0
0.00000000000000E+0 0.00000000000000E+0
BmDistLoadG 9 149 Y 1 -3.30000000000000E+0
-3.30000000000000E+0 0.00000000000000E+0 0.00000000000000E+0
0.00000000000000E+0 0.00000000000000E+0
BmDistLoadG 9 150 Y 1 -3.30000000000000E+0
-3.30000000000000E+0 0.00000000000000E+0 0.00000000000000E+0
0.00000000000000E+0 0.00000000000000E+0
BmDistLoadG 9 151 Y 1 -3.30000000000000E+0
-3.30000000000000E+0 0.00000000000000E+0 0.00000000000000E+0
0.00000000000000E+0 0.00000000000000E+0
BmDistLoadG 9 152 Y 1 -3.30000000000000E+0
-3.30000000000000E+0 0.00000000000000E+0 0.00000000000000E+0
0.00000000000000E+0 0.00000000000000E+0
BmDistLoadG 9 153 Y 1 -3.30000000000000E+0
-3.30000000000000E+0 0.00000000000000E+0 0.00000000000000E+0
0.00000000000000E+0 0.00000000000000E+0
BmDistLoadG 9 154 Y 1 -3.30000000000000E+0
-3.30000000000000E+0 0.00000000000000E+0 0.00000000000000E+0
0.00000000000000E+0 0.00000000000000E+0
BmDistLoadG 9 155 Y 1 -3.30000000000000E+0
-3.30000000000000E+0 0.00000000000000E+0 0.00000000000000E+0
0.00000000000000E+0 0.00000000000000E+0
BmDistLoadG 9 156 Y 1 -3.30000000000000E+0
-3.30000000000000E+0 0.00000000000000E+0 0.00000000000000E+0
0.00000000000000E+0 0.00000000000000E+0
BmDistLoadG 9 157 Y 1 -3.30000000000000E+0

-3.30000000000000E+0 0.00000000000000E+0 0.00000000000000E+0
0.00000000000000E+0 0.00000000000000E+0
BmDistLoadG 9 158 Y 1 -3.30000000000000E+0
-3.30000000000000E+0 0.00000000000000E+0 0.00000000000000E+0
0.00000000000000E+0 0.00000000000000E+0
BmDistLoadG 9 159 Y 1 -1.65000000000000E+0
-1.65000000000000E+0 0.00000000000000E+0 0.00000000000000E+0
0.00000000000000E+0 0.00000000000000E+0
BmDistLoadG 9 160 Y 1 -1.65000000000000E+0
-1.65000000000000E+0 0.00000000000000E+0 0.00000000000000E+0
0.00000000000000E+0 0.00000000000000E+0
BmDistLoadG 9 161 Y 1 -1.65000000000000E+0
-1.65000000000000E+0 0.00000000000000E+0 0.00000000000000E+0
0.00000000000000E+0 0.00000000000000E+0
BmDistLoadG 9 162 Y 1 -1.65000000000000E+0
-1.65000000000000E+0 0.00000000000000E+0 0.00000000000000E+0
0.00000000000000E+0 0.00000000000000E+0
BmDistLoadG 9 163 Y 1 -1.65000000000000E+0
-1.65000000000000E+0 0.00000000000000E+0 0.00000000000000E+0
0.00000000000000E+0 0.00000000000000E+0
BmDistLoadG 9 164 Z 1 1.15500000000000E+0
1.15500000000000E+0 0.00000000000000E+0 0.00000000000000E+0
0.00000000000000E+0 0.00000000000000E+0
BmDistLoadG 9 165 Z 1 1.15500000000000E+0
1.15500000000000E+0 0.00000000000000E+0 0.00000000000000E+0
0.00000000000000E+0 0.00000000000000E+0
BmDistLoadG 9 166 Z 1 1.15500000000000E+0
1.15500000000000E+0 0.00000000000000E+0 0.00000000000000E+0
0.00000000000000E+0 0.00000000000000E+0
BmDistLoadG 9 167 Z 1 1.15500000000000E+0
1.15500000000000E+0 0.00000000000000E+0 0.00000000000000E+0
0.00000000000000E+0 0.00000000000000E+0
BmDistLoadG 9 168 Z 1 1.15500000000000E+0
1.15500000000000E+0 0.00000000000000E+0 0.00000000000000E+0
0.00000000000000E+0 0.00000000000000E+0
BmDistLoadG 9 169 Z 1 1.15500000000000E+0
1.15500000000000E+0 0.00000000000000E+0 0.00000000000000E+0
0.00000000000000E+0 0.00000000000000E+0
BmDistLoadG 9 170 Z 1 1.15500000000000E+0
1.15500000000000E+0 0.00000000000000E+0 0.00000000000000E+0
0.00000000000000E+0 0.00000000000000E+0
BmDistLoadG 9 171 Z 1 1.15500000000000E+0
1.15500000000000E+0 0.00000000000000E+0 0.00000000000000E+0
0.00000000000000E+0 0.00000000000000E+0
BmDistLoadG 9 172 Z 1 1.15500000000000E+0
1.15500000000000E+0 0.00000000000000E+0 0.00000000000000E+0
0.00000000000000E+0 0.00000000000000E+0
BmDistLoadG 9 173 Z 1 1.15500000000000E+0
1.15500000000000E+0 0.00000000000000E+0 0.00000000000000E+0
0.00000000000000E+0 0.00000000000000E+0
BmDistLoadG 9 174 Z 1 1.15500000000000E+0
1.15500000000000E+0 0.00000000000000E+0 0.00000000000000E+0
0.00000000000000E+0 0.00000000000000E+0
BmDistLoadG 9 175 Z 1 1.15500000000000E+0

```
1.15500000000000E+0      0.00000000000000E+0      0.00000000000000E+0
0.00000000000000E+0      0.00000000000000E+0
   BmDistLoadG              9     176      Z      1     1.15500000000000E+0
1.15500000000000E+0      0.00000000000000E+0      0.00000000000000E+0
0.00000000000000E+0      0.00000000000000E+0
   BmDistLoadG              9     177      Z      1     1.15500000000000E+0
1.15500000000000E+0      0.00000000000000E+0      0.00000000000000E+0
0.00000000000000E+0      0.00000000000000E+0
   BmDistLoadG              9     178      Z      1     1.15500000000000E+0
1.15500000000000E+0      0.00000000000000E+0      0.00000000000000E+0
0.00000000000000E+0      0.00000000000000E+0
   BmDistLoadG              9     179      Z      1     1.15500000000000E+0
1.15500000000000E+0      0.00000000000000E+0      0.00000000000000E+0
0.00000000000000E+0      0.00000000000000E+0
   BmDistLoadG              9     180      Z      1     1.15500000000000E+0
1.15500000000000E+0      0.00000000000000E+0      0.00000000000000E+0
0.00000000000000E+0      0.00000000000000E+0
   BmDistLoadG              9     181      Z      1     1.15500000000000E+0
1.15500000000000E+0      0.00000000000000E+0      0.00000000000000E+0
0.00000000000000E+0      0.00000000000000E+0
   BmDistLoadG              9     182      Z      1     1.15500000000000E+0
1.15500000000000E+0      0.00000000000000E+0      0.00000000000000E+0
0.00000000000000E+0      0.00000000000000E+0
   BmDistLoadG              9     183      Z      1     1.15500000000000E+0
1.15500000000000E+0      0.00000000000000E+0      0.00000000000000E+0
0.00000000000000E+0      0.00000000000000E+0
   BmDistLoadG              9     184      Z      1     1.15500000000000E+0
1.15500000000000E+0      0.00000000000000E+0      0.00000000000000E+0
0.00000000000000E+0      0.00000000000000E+0
   BmDistLoadG              9     185      Z      1     1.15500000000000E+0
1.15500000000000E+0      0.00000000000000E+0      0.00000000000000E+0
0.00000000000000E+0      0.00000000000000E+0
   BmDistLoadG              9     186      Z      1     1.15500000000000E+0
1.15500000000000E+0      0.00000000000000E+0      0.00000000000000E+0
0.00000000000000E+0      0.00000000000000E+0
   BmDistLoadG              9     187      Z      1     1.15500000000000E+0
1.15500000000000E+0      0.00000000000000E+0      0.00000000000000E+0
0.00000000000000E+0      0.00000000000000E+0
   BmDistLoadG              9     188      Z      1     1.15500000000000E+0
1.15500000000000E+0      0.00000000000000E+0      0.00000000000000E+0
0.00000000000000E+0      0.00000000000000E+0
   BmDistLoadG              9     189      Z      1     1.15500000000000E+0
1.15500000000000E+0      0.00000000000000E+0      0.00000000000000E+0
0.00000000000000E+0      0.00000000000000E+0
   BmDistLoadG              9     190      Z      1     1.15500000000000E+0
1.15500000000000E+0      0.00000000000000E+0      0.00000000000000E+0
0.00000000000000E+0      0.00000000000000E+0
   BmDistLoadG              9     191      Z      1     1.15500000000000E+0
1.15500000000000E+0      0.00000000000000E+0      0.00000000000000E+0
0.00000000000000E+0      0.00000000000000E+0
   BmDistLoadG              9     192      Z      1     1.15500000000000E+0
1.15500000000000E+0      0.00000000000000E+0      0.00000000000000E+0
0.00000000000000E+0      0.00000000000000E+0
   BmDistLoadG              9     193      Z      1     1.15500000000000E+0
```

```
1.15500000000000E+0        0.00000000000000E+0        0.00000000000000E+0
0.00000000000000E+0        0.00000000000000E+0
   BmDistLoadG                9     194       Z        1      1.15500000000000E+0
1.15500000000000E+0        0.00000000000000E+0        0.00000000000000E+0
0.00000000000000E+0        0.00000000000000E+0
   BmDistLoadG                9     195       Z        1      1.15500000000000E+0
1.15500000000000E+0        0.00000000000000E+0        0.00000000000000E+0
0.00000000000000E+0        0.00000000000000E+0
   BmDistLoadG                9     196       Z        1      1.15500000000000E+0
1.15500000000000E+0        0.00000000000000E+0        0.00000000000000E+0
0.00000000000000E+0        0.00000000000000E+0
   BmDistLoadG                9     197       Z        1      1.15500000000000E+0
1.15500000000000E+0        0.00000000000000E+0        0.00000000000000E+0
0.00000000000000E+0        0.00000000000000E+0
   BmDistLoadG                9     198       Z        1      1.15500000000000E+0
1.15500000000000E+0        0.00000000000000E+0        0.00000000000000E+0
0.00000000000000E+0        0.00000000000000E+0
   BmDistLoadG                9     199       Z        1      1.15500000000000E+0
1.15500000000000E+0        0.00000000000000E+0        0.00000000000000E+0
0.00000000000000E+0        0.00000000000000E+0
   BmDistLoadG                9     200       Z        1      1.15500000000000E+0
1.15500000000000E+0        0.00000000000000E+0        0.00000000000000E+0
0.00000000000000E+0        0.00000000000000E+0
   BmDistLoadG                9     201       Z        1      1.15500000000000E+0
1.15500000000000E+0        0.00000000000000E+0        0.00000000000000E+0
0.00000000000000E+0        0.00000000000000E+0
   BmDistLoadG                9     202       Z        1      1.15500000000000E+0
1.15500000000000E+0        0.00000000000000E+0        0.00000000000000E+0
0.00000000000000E+0        0.00000000000000E+0
   BmDistLoadG                9     203       Z        1      1.15500000000000E+0
1.15500000000000E+0        0.00000000000000E+0        0.00000000000000E+0
0.00000000000000E+0        0.00000000000000E+0
   BmDistLoadG                9     204       Z        1      1.15500000000000E+0
1.15500000000000E+0        0.00000000000000E+0        0.00000000000000E+0
0.00000000000000E+0        0.00000000000000E+0
   BmDistLoadG                9     205       Z        1      1.15500000000000E+0
1.15500000000000E+0        0.00000000000000E+0        0.00000000000000E+0
0.00000000000000E+0        0.00000000000000E+0
   BmDistLoadG                9     206       Z        1      1.15500000000000E+0
1.15500000000000E+0        0.00000000000000E+0        0.00000000000000E+0
0.00000000000000E+0        0.00000000000000E+0
   BmDistLoadG                9     207       Z        1      1.15500000000000E+0
1.15500000000000E+0        0.00000000000000E+0        0.00000000000000E+0
0.00000000000000E+0        0.00000000000000E+0
   BmDistLoadG                9     208       Z        1      1.15500000000000E+0
1.15500000000000E+0        0.00000000000000E+0        0.00000000000000E+0
0.00000000000000E+0        0.00000000000000E+0
   BmDistLoadG                9     209       Z        1      1.15500000000000E+0
1.15500000000000E+0        0.00000000000000E+0        0.00000000000000E+0
0.00000000000000E+0        0.00000000000000E+0
   BmDistLoadG                9     210       Z        1      1.15500000000000E+0
1.15500000000000E+0        0.00000000000000E+0        0.00000000000000E+0
0.00000000000000E+0        0.00000000000000E+0
   BmDistLoadG                9     211       Z        1      1.15500000000000E+0
```

```
1.15500000000000E+0      0.00000000000000E+0      0.00000000000000E+0
0.00000000000000E+0      0.00000000000000E+0
   BmDistLoadG              9     212      Z      1     1.15500000000000E+0
1.15500000000000E+0      0.00000000000000E+0      0.00000000000000E+0
0.00000000000000E+0      0.00000000000000E+0
   BmDistLoadG              9     213      Z      1     1.15500000000000E+0
1.15500000000000E+0      0.00000000000000E+0      0.00000000000000E+0
0.00000000000000E+0      0.00000000000000E+0
   BmDistLoadG              9     214      Z      1     1.15500000000000E+0
1.15500000000000E+0      0.00000000000000E+0      0.00000000000000E+0
0.00000000000000E+0      0.00000000000000E+0
   BmDistLoadG              9     215      Z      1     1.15500000000000E+0
1.15500000000000E+0      0.00000000000000E+0      0.00000000000000E+0
0.00000000000000E+0      0.00000000000000E+0
   BmDistLoadG              9     216      Z      1     1.15500000000000E+0
1.15500000000000E+0      0.00000000000000E+0      0.00000000000000E+0
0.00000000000000E+0      0.00000000000000E+0
   BmDistLoadG              9     217      Z      1     1.15500000000000E+0
1.15500000000000E+0      0.00000000000000E+0      0.00000000000000E+0
0.00000000000000E+0      0.00000000000000E+0
   BmDistLoadG              9     218      Z      1     2.31000000000000E+0
2.31000000000000E+0      0.00000000000000E+0      0.00000000000000E+0
0.00000000000000E+0      0.00000000000000E+0
   BmDistLoadG              9     219      Z      1     2.31000000000000E+0
2.31000000000000E+0      0.00000000000000E+0      0.00000000000000E+0
0.00000000000000E+0      0.00000000000000E+0
   BmDistLoadG              9     220      Z      1     2.31000000000000E+0
2.31000000000000E+0      0.00000000000000E+0      0.00000000000000E+0
0.00000000000000E+0      0.00000000000000E+0
   BmDistLoadG              9     221      Z      1     2.31000000000000E+0
2.31000000000000E+0      0.00000000000000E+0      0.00000000000000E+0
0.00000000000000E+0      0.00000000000000E+0
   BmDistLoadG              9     222      Z      1     2.31000000000000E+0
2.31000000000000E+0      0.00000000000000E+0      0.00000000000000E+0
0.00000000000000E+0      0.00000000000000E+0
   BmDistLoadG              9     223      Z      1     2.31000000000000E+0
2.31000000000000E+0      0.00000000000000E+0      0.00000000000000E+0
0.00000000000000E+0      0.00000000000000E+0
   BmDistLoadG              9     224      Z      1     2.31000000000000E+0
2.31000000000000E+0      0.00000000000000E+0      0.00000000000000E+0
0.00000000000000E+0      0.00000000000000E+0
   BmDistLoadG              9     225      Z      1     2.31000000000000E+0
2.31000000000000E+0      0.00000000000000E+0      0.00000000000000E+0
0.00000000000000E+0      0.00000000000000E+0
   BmDistLoadG              9     226      Z      1     2.31000000000000E+0
2.31000000000000E+0      0.00000000000000E+0      0.00000000000000E+0
0.00000000000000E+0      0.00000000000000E+0
   BmDistLoadG              9     227      Z      1     2.31000000000000E+0
2.31000000000000E+0      0.00000000000000E+0      0.00000000000000E+0
0.00000000000000E+0      0.00000000000000E+0
   BmDistLoadG              9     228      Z      1     2.31000000000000E+0
2.31000000000000E+0      0.00000000000000E+0      0.00000000000000E+0
0.00000000000000E+0      0.00000000000000E+0
   BmDistLoadG              9     229      Z      1     2.31000000000000E+0
```

```
2.31000000000000E+0      0.00000000000000E+0      0.00000000000000E+0
0.00000000000000E+0      0.00000000000000E+0
   BmDistLoadG              9     230        Z      1     2.31000000000000E+0
2.31000000000000E+0      0.00000000000000E+0      0.00000000000000E+0
0.00000000000000E+0      0.00000000000000E+0
   BmDistLoadG              9     231        Z      1     2.31000000000000E+0
2.31000000000000E+0      0.00000000000000E+0      0.00000000000000E+0
0.00000000000000E+0      0.00000000000000E+0
   BmDistLoadG              9     232        Z      1     2.31000000000000E+0
2.31000000000000E+0      0.00000000000000E+0      0.00000000000000E+0
0.00000000000000E+0      0.00000000000000E+0
   BmDistLoadG              9     233        Z      1     2.31000000000000E+0
2.31000000000000E+0      0.00000000000000E+0      0.00000000000000E+0
0.00000000000000E+0      0.00000000000000E+0
   BmDistLoadG              9     234        Z      1     2.31000000000000E+0
2.31000000000000E+0      0.00000000000000E+0      0.00000000000000E+0
0.00000000000000E+0      0.00000000000000E+0
   BmDistLoadG              9     235        Z      1     2.31000000000000E+0
2.31000000000000E+0      0.00000000000000E+0      0.00000000000000E+0
0.00000000000000E+0      0.00000000000000E+0
   BmDistLoadG              9     236        Z      1     2.31000000000000E+0
2.31000000000000E+0      0.00000000000000E+0      0.00000000000000E+0
0.00000000000000E+0      0.00000000000000E+0
   BmDistLoadG              9     237        Z      1     2.31000000000000E+0
2.31000000000000E+0      0.00000000000000E+0      0.00000000000000E+0
0.00000000000000E+0      0.00000000000000E+0
   BmDistLoadG              9     238        Z      1     2.31000000000000E+0
2.31000000000000E+0      0.00000000000000E+0      0.00000000000000E+0
0.00000000000000E+0      0.00000000000000E+0
   BmDistLoadG              9     239        Z      1     2.31000000000000E+0
2.31000000000000E+0      0.00000000000000E+0      0.00000000000000E+0
0.00000000000000E+0      0.00000000000000E+0
   BmDistLoadG              9     240        Z      1     2.31000000000000E+0
2.31000000000000E+0      0.00000000000000E+0      0.00000000000000E+0
0.00000000000000E+0      0.00000000000000E+0
   BmDistLoadG              9     241        Z      1     2.31000000000000E+0
2.31000000000000E+0      0.00000000000000E+0      0.00000000000000E+0
0.00000000000000E+0      0.00000000000000E+0
   BmDistLoadG              9     242        Z      1     2.31000000000000E+0
2.31000000000000E+0      0.00000000000000E+0      0.00000000000000E+0
0.00000000000000E+0      0.00000000000000E+0
   BmDistLoadG              9     243        Z      1     2.31000000000000E+0
2.31000000000000E+0      0.00000000000000E+0      0.00000000000000E+0
0.00000000000000E+0      0.00000000000000E+0
   BmDistLoadG              9     244        Z      1     2.31000000000000E+0
2.31000000000000E+0      0.00000000000000E+0      0.00000000000000E+0
0.00000000000000E+0      0.00000000000000E+0
   BmDistLoadG              9     245        Z      1     2.31000000000000E+0
2.31000000000000E+0      0.00000000000000E+0      0.00000000000000E+0
0.00000000000000E+0      0.00000000000000E+0
   BmDistLoadG              9     246        Z      1     2.31000000000000E+0
2.31000000000000E+0      0.00000000000000E+0      0.00000000000000E+0
0.00000000000000E+0      0.00000000000000E+0
   BmDistLoadG              9     247        Z      1     2.31000000000000E+0
```

```
2.31000000000000E+0      0.00000000000000E+0      0.00000000000000E+0
0.00000000000000E+0      0.00000000000000E+0
   BmDistLoadG              9     248      Z      1     2.31000000000000E+0
2.31000000000000E+0      0.00000000000000E+0      0.00000000000000E+0
0.00000000000000E+0      0.00000000000000E+0
   BmDistLoadG              9     249      Z      1     2.31000000000000E+0
2.31000000000000E+0      0.00000000000000E+0      0.00000000000000E+0
0.00000000000000E+0      0.00000000000000E+0
   BmDistLoadG              9     250      Z      1     2.31000000000000E+0
2.31000000000000E+0      0.00000000000000E+0      0.00000000000000E+0
0.00000000000000E+0      0.00000000000000E+0
   BmDistLoadG              9     251      Z      1     2.31000000000000E+0
2.31000000000000E+0      0.00000000000000E+0      0.00000000000000E+0
0.00000000000000E+0      0.00000000000000E+0
   BmDistLoadG              9     252      Z      1     2.31000000000000E+0
2.31000000000000E+0      0.00000000000000E+0      0.00000000000000E+0
0.00000000000000E+0      0.00000000000000E+0
   BmDistLoadG              9     253      Z      1     2.31000000000000E+0
2.31000000000000E+0      0.00000000000000E+0      0.00000000000000E+0
0.00000000000000E+0      0.00000000000000E+0
   BmDistLoadG              9     254      Z      1     2.31000000000000E+0
2.31000000000000E+0      0.00000000000000E+0      0.00000000000000E+0
0.00000000000000E+0      0.00000000000000E+0
   BmDistLoadG              9     255      Z      1     2.31000000000000E+0
2.31000000000000E+0      0.00000000000000E+0      0.00000000000000E+0
0.00000000000000E+0      0.00000000000000E+0
   BmDistLoadG              9     256      Z      1     2.31000000000000E+0
2.31000000000000E+0      0.00000000000000E+0      0.00000000000000E+0
0.00000000000000E+0      0.00000000000000E+0
   BmDistLoadG              9     257      Z      1     2.31000000000000E+0
2.31000000000000E+0      0.00000000000000E+0      0.00000000000000E+0
0.00000000000000E+0      0.00000000000000E+0
   BmDistLoadG              9     258      Z      1     2.31000000000000E+0
2.31000000000000E+0      0.00000000000000E+0      0.00000000000000E+0
0.00000000000000E+0      0.00000000000000E+0
   BmDistLoadG              9     259      Z      1     2.31000000000000E+0
2.31000000000000E+0      0.00000000000000E+0      0.00000000000000E+0
0.00000000000000E+0      0.00000000000000E+0
   BmDistLoadG              9     260      Z      1     2.31000000000000E+0
2.31000000000000E+0      0.00000000000000E+0      0.00000000000000E+0
0.00000000000000E+0      0.00000000000000E+0
   BmDistLoadG              9     261      Z      1     2.31000000000000E+0
2.31000000000000E+0      0.00000000000000E+0      0.00000000000000E+0
0.00000000000000E+0      0.00000000000000E+0
   BmDistLoadG              9     262      Z      1     2.31000000000000E+0
2.31000000000000E+0      0.00000000000000E+0      0.00000000000000E+0
0.00000000000000E+0      0.00000000000000E+0
   BmDistLoadG              9     263      Z      1     2.31000000000000E+0
2.31000000000000E+0      0.00000000000000E+0      0.00000000000000E+0
0.00000000000000E+0      0.00000000000000E+0
   BmDistLoadG              9     264      Z      1     2.31000000000000E+0
2.31000000000000E+0      0.00000000000000E+0      0.00000000000000E+0
0.00000000000000E+0      0.00000000000000E+0
   BmDistLoadG              9     265      Z      1     2.31000000000000E+0
```

```
2.31000000000000E+0      0.00000000000000E+0      0.00000000000000E+0
0.00000000000000E+0      0.00000000000000E+0
   BmDistLoadG              9     266        Z      1     2.31000000000000E+0
2.31000000000000E+0      0.00000000000000E+0      0.00000000000000E+0
0.00000000000000E+0      0.00000000000000E+0
   BmDistLoadG              9     267        Z      1     2.31000000000000E+0
2.31000000000000E+0      0.00000000000000E+0      0.00000000000000E+0
0.00000000000000E+0      0.00000000000000E+0
   BmDistLoadG              9     268        Z      1     2.31000000000000E+0
2.31000000000000E+0      0.00000000000000E+0      0.00000000000000E+0
0.00000000000000E+0      0.00000000000000E+0
   BmDistLoadG              9     269        Z      1     2.31000000000000E+0
2.31000000000000E+0      0.00000000000000E+0      0.00000000000000E+0
0.00000000000000E+0      0.00000000000000E+0
   BmDistLoadG              9     270        Z      1     2.31000000000000E+0
2.31000000000000E+0      0.00000000000000E+0      0.00000000000000E+0
0.00000000000000E+0      0.00000000000000E+0
   BmDistLoadG              9     271        Z      1     2.31000000000000E+0
2.31000000000000E+0      0.00000000000000E+0      0.00000000000000E+0
0.00000000000000E+0      0.00000000000000E+0
   BmDistLoadG              9     272        Z      1     2.31000000000000E+0
2.31000000000000E+0      0.00000000000000E+0      0.00000000000000E+0
0.00000000000000E+0      0.00000000000000E+0
   BmDistLoadG              9     273        Z      1     2.31000000000000E+0
2.31000000000000E+0      0.00000000000000E+0      0.00000000000000E+0
0.00000000000000E+0      0.00000000000000E+0
   BmDistLoadG              9     274        Z      1     2.31000000000000E+0
2.31000000000000E+0      0.00000000000000E+0      0.00000000000000E+0
0.00000000000000E+0      0.00000000000000E+0
   BmDistLoadG              9     275        Z      1     2.31000000000000E+0
2.31000000000000E+0      0.00000000000000E+0      0.00000000000000E+0
0.00000000000000E+0      0.00000000000000E+0
   BmDistLoadG              9     276        Z      1     2.31000000000000E+0
2.31000000000000E+0      0.00000000000000E+0      0.00000000000000E+0
0.00000000000000E+0      0.00000000000000E+0
   BmDistLoadG              9     277        Z      1     2.31000000000000E+0
2.31000000000000E+0      0.00000000000000E+0      0.00000000000000E+0
0.00000000000000E+0      0.00000000000000E+0
   BmDistLoadG              9     278        Z      1     2.31000000000000E+0
2.31000000000000E+0      0.00000000000000E+0      0.00000000000000E+0
0.00000000000000E+0      0.00000000000000E+0
   BmDistLoadG              9     279        Z      1     2.31000000000000E+0
2.31000000000000E+0      0.00000000000000E+0      0.00000000000000E+0
0.00000000000000E+0      0.00000000000000E+0
   BmDistLoadG              9     280        Z      1     2.31000000000000E+0
2.31000000000000E+0      0.00000000000000E+0      0.00000000000000E+0
0.00000000000000E+0      0.00000000000000E+0
   BmDistLoadG              9     281        Z      1     2.31000000000000E+0
2.31000000000000E+0      0.00000000000000E+0      0.00000000000000E+0
0.00000000000000E+0      0.00000000000000E+0
   BmDistLoadG              9     282        Z      1     2.31000000000000E+0
2.31000000000000E+0      0.00000000000000E+0      0.00000000000000E+0
0.00000000000000E+0      0.00000000000000E+0
   BmDistLoadG              9     283        Z      1     2.31000000000000E+0
```

```
2.31000000000000E+0      0.00000000000000E+0      0.00000000000000E+0
0.00000000000000E+0      0.00000000000000E+0
   BmDistLoadG              9     284      Z      1     2.31000000000000E+0
2.31000000000000E+0      0.00000000000000E+0      0.00000000000000E+0
0.00000000000000E+0      0.00000000000000E+0
   BmDistLoadG              9     285      Z      1     2.31000000000000E+0
2.31000000000000E+0      0.00000000000000E+0      0.00000000000000E+0
0.00000000000000E+0      0.00000000000000E+0
   BmDistLoadG              9     286      Z      1     2.31000000000000E+0
2.31000000000000E+0      0.00000000000000E+0      0.00000000000000E+0
0.00000000000000E+0      0.00000000000000E+0
   BmDistLoadG              9     287      Z      1     2.31000000000000E+0
2.31000000000000E+0      0.00000000000000E+0      0.00000000000000E+0
0.00000000000000E+0      0.00000000000000E+0
   BmDistLoadG              9     288      Z      1     2.31000000000000E+0
2.31000000000000E+0      0.00000000000000E+0      0.00000000000000E+0
0.00000000000000E+0      0.00000000000000E+0
   BmDistLoadG              9     289      Z      1     2.31000000000000E+0
2.31000000000000E+0      0.00000000000000E+0      0.00000000000000E+0
0.00000000000000E+0      0.00000000000000E+0
   BmDistLoadG              9     290      Z      1     2.31000000000000E+0
2.31000000000000E+0      0.00000000000000E+0      0.00000000000000E+0
0.00000000000000E+0      0.00000000000000E+0
   BmDistLoadG              9     291      Z      1     2.31000000000000E+0
2.31000000000000E+0      0.00000000000000E+0      0.00000000000000E+0
0.00000000000000E+0      0.00000000000000E+0
   BmDistLoadG              9     292      Z      1     2.31000000000000E+0
2.31000000000000E+0      0.00000000000000E+0      0.00000000000000E+0
0.00000000000000E+0      0.00000000000000E+0
   BmDistLoadG              9     293      Z      1     2.31000000000000E+0
2.31000000000000E+0      0.00000000000000E+0      0.00000000000000E+0
0.00000000000000E+0      0.00000000000000E+0
   BmDistLoadG              9     294      Z      1     2.31000000000000E+0
2.31000000000000E+0      0.00000000000000E+0      0.00000000000000E+0
0.00000000000000E+0      0.00000000000000E+0
   BmDistLoadG              9     295      Z      1     2.31000000000000E+0
2.31000000000000E+0      0.00000000000000E+0      0.00000000000000E+0
0.00000000000000E+0      0.00000000000000E+0
   BmDistLoadG              9     296      Z      1     2.31000000000000E+0
2.31000000000000E+0      0.00000000000000E+0      0.00000000000000E+0
0.00000000000000E+0      0.00000000000000E+0
   BmDistLoadG              9     297      Z      1     2.31000000000000E+0
2.31000000000000E+0      0.00000000000000E+0      0.00000000000000E+0
0.00000000000000E+0      0.00000000000000E+0
   BmDistLoadG              9     298      Z      1     2.31000000000000E+0
2.31000000000000E+0      0.00000000000000E+0      0.00000000000000E+0
0.00000000000000E+0      0.00000000000000E+0
   BmDistLoadG              9     299      Z      1     2.31000000000000E+0
2.31000000000000E+0      0.00000000000000E+0      0.00000000000000E+0
0.00000000000000E+0      0.00000000000000E+0
   BmDistLoadG              9     300      Z      1     2.31000000000000E+0
2.31000000000000E+0      0.00000000000000E+0      0.00000000000000E+0
0.00000000000000E+0      0.00000000000000E+0
   BmDistLoadG              9     301      Z      1     2.31000000000000E+0
```

```
2.31000000000000E+0      0.00000000000000E+0      0.00000000000000E+0
0.00000000000000E+0      0.00000000000000E+0
   BmDistLoadG              9     302      Z      1     2.31000000000000E+0
2.31000000000000E+0      0.00000000000000E+0      0.00000000000000E+0
0.00000000000000E+0      0.00000000000000E+0
   BmDistLoadG              9     303      Z      1     2.31000000000000E+0
2.31000000000000E+0      0.00000000000000E+0      0.00000000000000E+0
0.00000000000000E+0      0.00000000000000E+0
   BmDistLoadG              9     304      Z      1     2.31000000000000E+0
2.31000000000000E+0      0.00000000000000E+0      0.00000000000000E+0
0.00000000000000E+0      0.00000000000000E+0
   BmDistLoadG              9     305      Z      1     2.31000000000000E+0
2.31000000000000E+0      0.00000000000000E+0      0.00000000000000E+0
0.00000000000000E+0      0.00000000000000E+0
   BmDistLoadG              9     306      Z      1     2.31000000000000E+0
2.31000000000000E+0      0.00000000000000E+0      0.00000000000000E+0
0.00000000000000E+0      0.00000000000000E+0
   BmDistLoadG              9     307      Z      1     2.31000000000000E+0
2.31000000000000E+0      0.00000000000000E+0      0.00000000000000E+0
0.00000000000000E+0      0.00000000000000E+0
   BmDistLoadG              9     308      Z      1     2.31000000000000E+0
2.31000000000000E+0      0.00000000000000E+0      0.00000000000000E+0
0.00000000000000E+0      0.00000000000000E+0
   BmDistLoadG              9     309      Z      1     2.31000000000000E+0
2.31000000000000E+0      0.00000000000000E+0      0.00000000000000E+0
0.00000000000000E+0      0.00000000000000E+0
   BmDistLoadG              9     310      Z      1     2.31000000000000E+0
2.31000000000000E+0      0.00000000000000E+0      0.00000000000000E+0
0.00000000000000E+0      0.00000000000000E+0
   BmDistLoadG              9     311      Z      1     2.31000000000000E+0
2.31000000000000E+0      0.00000000000000E+0      0.00000000000000E+0
0.00000000000000E+0      0.00000000000000E+0
   BmDistLoadG              9     312      Z      1     2.31000000000000E+0
2.31000000000000E+0      0.00000000000000E+0      0.00000000000000E+0
0.00000000000000E+0      0.00000000000000E+0
   BmDistLoadG              9     313      Z      1     2.31000000000000E+0
2.31000000000000E+0      0.00000000000000E+0      0.00000000000000E+0
0.00000000000000E+0      0.00000000000000E+0
   BmDistLoadG              9     314      Z      1     2.31000000000000E+0
2.31000000000000E+0      0.00000000000000E+0      0.00000000000000E+0
0.00000000000000E+0      0.00000000000000E+0
   BmDistLoadG              9     315      Z      1     2.31000000000000E+0
2.31000000000000E+0      0.00000000000000E+0      0.00000000000000E+0
0.00000000000000E+0      0.00000000000000E+0
   BmDistLoadG              9     316      Z      1     2.31000000000000E+0
2.31000000000000E+0      0.00000000000000E+0      0.00000000000000E+0
0.00000000000000E+0      0.00000000000000E+0
   BmDistLoadG              9     317      Z      1     2.31000000000000E+0
2.31000000000000E+0      0.00000000000000E+0      0.00000000000000E+0
0.00000000000000E+0      0.00000000000000E+0
   BmDistLoadG              9     318      Z      1     2.31000000000000E+0
2.31000000000000E+0      0.00000000000000E+0      0.00000000000000E+0
0.00000000000000E+0      0.00000000000000E+0
   BmDistLoadG              9     319      Z      1     2.31000000000000E+0
```

```
2.31000000000000E+0      0.00000000000000E+0      0.00000000000000E+0
0.00000000000000E+0      0.00000000000000E+0
   BmDistLoadG              9     320      Z      1     2.31000000000000E+0
2.31000000000000E+0      0.00000000000000E+0      0.00000000000000E+0
0.00000000000000E+0      0.00000000000000E+0
   BmDistLoadG              9     321      Z      1     2.31000000000000E+0
2.31000000000000E+0      0.00000000000000E+0      0.00000000000000E+0
0.00000000000000E+0      0.00000000000000E+0
   BmDistLoadG              9     322      Z      1     2.31000000000000E+0
2.31000000000000E+0      0.00000000000000E+0      0.00000000000000E+0
0.00000000000000E+0      0.00000000000000E+0
   BmDistLoadG              9     323      Z      1     2.31000000000000E+0
2.31000000000000E+0      0.00000000000000E+0      0.00000000000000E+0
0.00000000000000E+0      0.00000000000000E+0
   BmDistLoadG              9     324      Z      1     2.31000000000000E+0
2.31000000000000E+0      0.00000000000000E+0      0.00000000000000E+0
0.00000000000000E+0      0.00000000000000E+0
   BmDistLoadG              9     325      Z      1     2.31000000000000E+0
2.31000000000000E+0      0.00000000000000E+0      0.00000000000000E+0
0.00000000000000E+0      0.00000000000000E+0
   BmDistLoadG              9     326      Z      1     2.31000000000000E+0
2.31000000000000E+0      0.00000000000000E+0      0.00000000000000E+0
0.00000000000000E+0      0.00000000000000E+0
   BmDistLoadG              9     327      Z      1     2.31000000000000E+0
2.31000000000000E+0      0.00000000000000E+0      0.00000000000000E+0
0.00000000000000E+0      0.00000000000000E+0
   BmDistLoadG              9     328      Z      1     2.31000000000000E+0
2.31000000000000E+0      0.00000000000000E+0      0.00000000000000E+0
0.00000000000000E+0      0.00000000000000E+0
   BmDistLoadG              9     329      Z      1     2.31000000000000E+0
2.31000000000000E+0      0.00000000000000E+0      0.00000000000000E+0
0.00000000000000E+0      0.00000000000000E+0
   BmDistLoadG              9     330      Z      1     2.31000000000000E+0
2.31000000000000E+0      0.00000000000000E+0      0.00000000000000E+0
0.00000000000000E+0      0.00000000000000E+0
   BmDistLoadG              9     331      Z      1     2.31000000000000E+0
2.31000000000000E+0      0.00000000000000E+0      0.00000000000000E+0
0.00000000000000E+0      0.00000000000000E+0
   BmDistLoadG              9     332      Z      1     2.31000000000000E+0
2.31000000000000E+0      0.00000000000000E+0      0.00000000000000E+0
0.00000000000000E+0      0.00000000000000E+0
   BmDistLoadG              9     333      Z      1     2.31000000000000E+0
2.31000000000000E+0      0.00000000000000E+0      0.00000000000000E+0
0.00000000000000E+0      0.00000000000000E+0
   BmDistLoadG              9     334      Z      1     2.31000000000000E+0
2.31000000000000E+0      0.00000000000000E+0      0.00000000000000E+0
0.00000000000000E+0      0.00000000000000E+0
   BmDistLoadG              9     335      Z      1     2.31000000000000E+0
2.31000000000000E+0      0.00000000000000E+0      0.00000000000000E+0
0.00000000000000E+0      0.00000000000000E+0
   BmDistLoadG              9     336      Z      1     2.31000000000000E+0
2.31000000000000E+0      0.00000000000000E+0      0.00000000000000E+0
0.00000000000000E+0      0.00000000000000E+0
   BmDistLoadG              9     337      Z      1     2.31000000000000E+0
```

```
2.31000000000000E+0      0.00000000000000E+0      0.00000000000000E+0
0.00000000000000E+0      0.00000000000000E+0
   BmDistLoadG              9     338      Z      1     2.31000000000000E+0
2.31000000000000E+0      0.00000000000000E+0      0.00000000000000E+0
0.00000000000000E+0      0.00000000000000E+0
   BmDistLoadG              9     339      Z      1     2.31000000000000E+0
2.31000000000000E+0      0.00000000000000E+0      0.00000000000000E+0
0.00000000000000E+0      0.00000000000000E+0
   BmDistLoadG              9     340      Z      1     2.31000000000000E+0
2.31000000000000E+0      0.00000000000000E+0      0.00000000000000E+0
0.00000000000000E+0      0.00000000000000E+0
   BmDistLoadG              9     341      Z      1     2.31000000000000E+0
2.31000000000000E+0      0.00000000000000E+0      0.00000000000000E+0
0.00000000000000E+0      0.00000000000000E+0
   BmDistLoadG              9     342      Z      1     2.31000000000000E+0
2.31000000000000E+0      0.00000000000000E+0      0.00000000000000E+0
0.00000000000000E+0      0.00000000000000E+0
   BmDistLoadG              9     343      Z      1     2.31000000000000E+0
2.31000000000000E+0      0.00000000000000E+0      0.00000000000000E+0
0.00000000000000E+0      0.00000000000000E+0
   BmDistLoadG              9     344      Z      1     2.31000000000000E+0
2.31000000000000E+0      0.00000000000000E+0      0.00000000000000E+0
0.00000000000000E+0      0.00000000000000E+0
   BmDistLoadG              9     345      Z      1     2.31000000000000E+0
2.31000000000000E+0      0.00000000000000E+0      0.00000000000000E+0
0.00000000000000E+0      0.00000000000000E+0
   BmDistLoadG              9     346      Z      1     2.31000000000000E+0
2.31000000000000E+0      0.00000000000000E+0      0.00000000000000E+0
0.00000000000000E+0      0.00000000000000E+0
   BmDistLoadG              9     347      Z      1     2.31000000000000E+0
2.31000000000000E+0      0.00000000000000E+0      0.00000000000000E+0
0.00000000000000E+0      0.00000000000000E+0
   BmDistLoadG              9     348      Z      1     2.31000000000000E+0
2.31000000000000E+0      0.00000000000000E+0      0.00000000000000E+0
0.00000000000000E+0      0.00000000000000E+0
   BmDistLoadG              9     349      Z      1     2.31000000000000E+0
2.31000000000000E+0      0.00000000000000E+0      0.00000000000000E+0
0.00000000000000E+0      0.00000000000000E+0
   BmDistLoadG              9     350      Z      1     2.31000000000000E+0
2.31000000000000E+0      0.00000000000000E+0      0.00000000000000E+0
0.00000000000000E+0      0.00000000000000E+0
   BmDistLoadG              9     351      Z      1     2.31000000000000E+0
2.31000000000000E+0      0.00000000000000E+0      0.00000000000000E+0
0.00000000000000E+0      0.00000000000000E+0
   BmDistLoadG              9     352      Z      1     2.31000000000000E+0
2.31000000000000E+0      0.00000000000000E+0      0.00000000000000E+0
0.00000000000000E+0      0.00000000000000E+0
   BmDistLoadG              9     353      Z      1     2.31000000000000E+0
2.31000000000000E+0      0.00000000000000E+0      0.00000000000000E+0
0.00000000000000E+0      0.00000000000000E+0
   BmDistLoadG              9     354      Z      1     2.31000000000000E+0
2.31000000000000E+0      0.00000000000000E+0      0.00000000000000E+0
0.00000000000000E+0      0.00000000000000E+0
   BmDistLoadG              9     355      Z      1     2.31000000000000E+0
```

```
2.31000000000000E+0       0.00000000000000E+0       0.00000000000000E+0
0.00000000000000E+0       0.00000000000000E+0
   BmDistLoadG               9      356        Z        1      2.31000000000000E+0
2.31000000000000E+0       0.00000000000000E+0       0.00000000000000E+0
0.00000000000000E+0       0.00000000000000E+0
   BmDistLoadG               9      357        Z        1      2.31000000000000E+0
2.31000000000000E+0       0.00000000000000E+0       0.00000000000000E+0
0.00000000000000E+0       0.00000000000000E+0
   BmDistLoadG               9      358        Z        1      2.31000000000000E+0
2.31000000000000E+0       0.00000000000000E+0       0.00000000000000E+0
0.00000000000000E+0       0.00000000000000E+0
   BmDistLoadG               9      359        Z        1      2.31000000000000E+0
2.31000000000000E+0       0.00000000000000E+0       0.00000000000000E+0
0.00000000000000E+0       0.00000000000000E+0
   BmDistLoadG               9      360        Z        1      2.31000000000000E+0
2.31000000000000E+0       0.00000000000000E+0       0.00000000000000E+0
0.00000000000000E+0       0.00000000000000E+0
   BmDistLoadG               9      361        Z        1      2.31000000000000E+0
2.31000000000000E+0       0.00000000000000E+0       0.00000000000000E+0
0.00000000000000E+0       0.00000000000000E+0
   BmDistLoadG               9      362        Z        1      2.31000000000000E+0
2.31000000000000E+0       0.00000000000000E+0       0.00000000000000E+0
0.00000000000000E+0       0.00000000000000E+0
   BmDistLoadG               9      363        Z        1      2.31000000000000E+0
2.31000000000000E+0       0.00000000000000E+0       0.00000000000000E+0
0.00000000000000E+0       0.00000000000000E+0
   BmDistLoadG               9      364        Z        1      2.31000000000000E+0
2.31000000000000E+0       0.00000000000000E+0       0.00000000000000E+0
0.00000000000000E+0       0.00000000000000E+0
   BmDistLoadG               9      365        Z        1      2.31000000000000E+0
2.31000000000000E+0       0.00000000000000E+0       0.00000000000000E+0
0.00000000000000E+0       0.00000000000000E+0
   BmDistLoadG               9      366        Z        1      2.31000000000000E+0
2.31000000000000E+0       0.00000000000000E+0       0.00000000000000E+0
0.00000000000000E+0       0.00000000000000E+0
   BmDistLoadG               9      367        Z        1      2.31000000000000E+0
2.31000000000000E+0       0.00000000000000E+0       0.00000000000000E+0
0.00000000000000E+0       0.00000000000000E+0
   BmDistLoadG               9      368        Z        1      2.31000000000000E+0
2.31000000000000E+0       0.00000000000000E+0       0.00000000000000E+0
0.00000000000000E+0       0.00000000000000E+0
   BmDistLoadG               9      369        Z        1      2.31000000000000E+0
2.31000000000000E+0       0.00000000000000E+0       0.00000000000000E+0
0.00000000000000E+0       0.00000000000000E+0
   BmDistLoadG               9      370        Z        1      2.31000000000000E+0
2.31000000000000E+0       0.00000000000000E+0       0.00000000000000E+0
0.00000000000000E+0       0.00000000000000E+0
   BmDistLoadG               9      371        Z        1      2.31000000000000E+0
2.31000000000000E+0       0.00000000000000E+0       0.00000000000000E+0
0.00000000000000E+0       0.00000000000000E+0
   BmDistLoadG               9      372        Z        1      2.31000000000000E+0
2.31000000000000E+0       0.00000000000000E+0       0.00000000000000E+0
0.00000000000000E+0       0.00000000000000E+0
   BmDistLoadG               9      373        Z        1      2.31000000000000E+0
```

```
2.31000000000000E+0      0.00000000000000E+0      0.00000000000000E+0
0.00000000000000E+0      0.00000000000000E+0
   BmDistLoadG              9     374        Z      1     2.31000000000000E+0
2.31000000000000E+0      0.00000000000000E+0      0.00000000000000E+0
0.00000000000000E+0      0.00000000000000E+0
   BmDistLoadG              9     375        Z      1     2.31000000000000E+0
2.31000000000000E+0      0.00000000000000E+0      0.00000000000000E+0
0.00000000000000E+0      0.00000000000000E+0
   BmDistLoadG              9     376        Z      1     2.31000000000000E+0
2.31000000000000E+0      0.00000000000000E+0      0.00000000000000E+0
0.00000000000000E+0      0.00000000000000E+0
   BmDistLoadG              9     377        Z      1     2.31000000000000E+0
2.31000000000000E+0      0.00000000000000E+0      0.00000000000000E+0
0.00000000000000E+0      0.00000000000000E+0
   BmDistLoadG              9     378        Z      1     2.31000000000000E+0
2.31000000000000E+0      0.00000000000000E+0      0.00000000000000E+0
0.00000000000000E+0      0.00000000000000E+0
   BmDistLoadG              9     379        Z      1     2.31000000000000E+0
2.31000000000000E+0      0.00000000000000E+0      0.00000000000000E+0
0.00000000000000E+0      0.00000000000000E+0
   BmDistLoadG              9     380        Z      1     2.31000000000000E+0
2.31000000000000E+0      0.00000000000000E+0      0.00000000000000E+0
0.00000000000000E+0      0.00000000000000E+0
   BmDistLoadG              9     381        Z      1     2.31000000000000E+0
2.31000000000000E+0      0.00000000000000E+0      0.00000000000000E+0
0.00000000000000E+0      0.00000000000000E+0
   BmDistLoadG              9     382        Z      1     2.31000000000000E+0
2.31000000000000E+0      0.00000000000000E+0      0.00000000000000E+0
0.00000000000000E+0      0.00000000000000E+0
   BmDistLoadG              9     383        Z      1     2.31000000000000E+0
2.31000000000000E+0      0.00000000000000E+0      0.00000000000000E+0
0.00000000000000E+0      0.00000000000000E+0
   BmDistLoadG              9     384        Z      1     2.31000000000000E+0
2.31000000000000E+0      0.00000000000000E+0      0.00000000000000E+0
0.00000000000000E+0      0.00000000000000E+0
   BmDistLoadG              9     385        Z      1     2.31000000000000E+0
2.31000000000000E+0      0.00000000000000E+0      0.00000000000000E+0
0.00000000000000E+0      0.00000000000000E+0
   BmDistLoadG              9     386        Z      1     2.31000000000000E+0
2.31000000000000E+0      0.00000000000000E+0      0.00000000000000E+0
0.00000000000000E+0      0.00000000000000E+0
   BmDistLoadG              9     387        Z      1     2.31000000000000E+0
2.31000000000000E+0      0.00000000000000E+0      0.00000000000000E+0
0.00000000000000E+0      0.00000000000000E+0
   BmDistLoadG              9     388        Z      1     2.31000000000000E+0
2.31000000000000E+0      0.00000000000000E+0      0.00000000000000E+0
0.00000000000000E+0      0.00000000000000E+0
   BmDistLoadG              9     389        Z      1     2.31000000000000E+0
2.31000000000000E+0      0.00000000000000E+0      0.00000000000000E+0
0.00000000000000E+0      0.00000000000000E+0
   BmDistLoadG              9     390        Z      1     2.31000000000000E+0
2.31000000000000E+0      0.00000000000000E+0      0.00000000000000E+0
0.00000000000000E+0      0.00000000000000E+0
   BmDistLoadG              9     391        Z      1     2.31000000000000E+0
```

```
2.31000000000000E+0      0.00000000000000E+0      0.00000000000000E+0
0.00000000000000E+0      0.00000000000000E+0
   BmDistLoadG              9     392      Z      1    2.31000000000000E+0
2.31000000000000E+0      0.00000000000000E+0      0.00000000000000E+0
0.00000000000000E+0      0.00000000000000E+0
   BmDistLoadG              9     393      Z      1    2.31000000000000E+0
2.31000000000000E+0      0.00000000000000E+0      0.00000000000000E+0
0.00000000000000E+0      0.00000000000000E+0
   BmDistLoadG              9     394      Z      1    2.31000000000000E+0
2.31000000000000E+0      0.00000000000000E+0      0.00000000000000E+0
0.00000000000000E+0      0.00000000000000E+0
   BmDistLoadG              9     395      Z      1    2.31000000000000E+0
2.31000000000000E+0      0.00000000000000E+0      0.00000000000000E+0
0.00000000000000E+0      0.00000000000000E+0
   BmDistLoadG              9     396      Z      1    2.31000000000000E+0
2.31000000000000E+0      0.00000000000000E+0      0.00000000000000E+0
0.00000000000000E+0      0.00000000000000E+0
   BmDistLoadG              9     397      Z      1    2.31000000000000E+0
2.31000000000000E+0      0.00000000000000E+0      0.00000000000000E+0
0.00000000000000E+0      0.00000000000000E+0
   BmDistLoadG              9     398      Z      1    2.31000000000000E+0
2.31000000000000E+0      0.00000000000000E+0      0.00000000000000E+0
0.00000000000000E+0      0.00000000000000E+0
   BmDistLoadG              9     399      Z      1    2.31000000000000E+0
2.31000000000000E+0      0.00000000000000E+0      0.00000000000000E+0
0.00000000000000E+0      0.00000000000000E+0
   BmDistLoadG              9     400      Z      1    2.31000000000000E+0
2.31000000000000E+0      0.00000000000000E+0      0.00000000000000E+0
0.00000000000000E+0      0.00000000000000E+0
   BmDistLoadG              9     401      Z      1    2.31000000000000E+0
2.31000000000000E+0      0.00000000000000E+0      0.00000000000000E+0
0.00000000000000E+0      0.00000000000000E+0
   BmDistLoadG              9     402      Z      1    2.31000000000000E+0
2.31000000000000E+0      0.00000000000000E+0      0.00000000000000E+0
0.00000000000000E+0      0.00000000000000E+0
   BmDistLoadG              9     403      Z      1    2.31000000000000E+0
2.31000000000000E+0      0.00000000000000E+0      0.00000000000000E+0
0.00000000000000E+0      0.00000000000000E+0
   BmDistLoadG              9     404      Z      1    2.31000000000000E+0
2.31000000000000E+0      0.00000000000000E+0      0.00000000000000E+0
0.00000000000000E+0      0.00000000000000E+0
   BmDistLoadG              9     405      Z      1    2.31000000000000E+0
2.31000000000000E+0      0.00000000000000E+0      0.00000000000000E+0
0.00000000000000E+0      0.00000000000000E+0
   BmDistLoadG              9     406      Z      1    2.31000000000000E+0
2.31000000000000E+0      0.00000000000000E+0      0.00000000000000E+0
0.00000000000000E+0      0.00000000000000E+0
   BmDistLoadG              9     407      Z      1    2.31000000000000E+0
2.31000000000000E+0      0.00000000000000E+0      0.00000000000000E+0
0.00000000000000E+0      0.00000000000000E+0
   BmDistLoadG              9     408      Z      1    2.31000000000000E+0
2.31000000000000E+0      0.00000000000000E+0      0.00000000000000E+0
0.00000000000000E+0      0.00000000000000E+0
   BmDistLoadG              9     409      Z      1    2.31000000000000E+0
```

```
2.31000000000000E+0      0.00000000000000E+0      0.00000000000000E+0
0.00000000000000E+0      0.00000000000000E+0
   BmDistLoadG              9     410       Z       1     2.31000000000000E+0
2.31000000000000E+0      0.00000000000000E+0      0.00000000000000E+0
0.00000000000000E+0      0.00000000000000E+0
   BmDistLoadG              9     411       Z       1     2.31000000000000E+0
2.31000000000000E+0      0.00000000000000E+0      0.00000000000000E+0
0.00000000000000E+0      0.00000000000000E+0
   BmDistLoadG              9     412       Z       1     2.31000000000000E+0
2.31000000000000E+0      0.00000000000000E+0      0.00000000000000E+0
0.00000000000000E+0      0.00000000000000E+0
   BmDistLoadG              9     413       Z       1     2.31000000000000E+0
2.31000000000000E+0      0.00000000000000E+0      0.00000000000000E+0
0.00000000000000E+0      0.00000000000000E+0
   BmDistLoadG              9     414       Z       1     2.31000000000000E+0
2.31000000000000E+0      0.00000000000000E+0      0.00000000000000E+0
0.00000000000000E+0      0.00000000000000E+0
   BmDistLoadG              9     415       Z       1     2.31000000000000E+0
2.31000000000000E+0      0.00000000000000E+0      0.00000000000000E+0
0.00000000000000E+0      0.00000000000000E+0
   BmDistLoadG              9     416       Z       1     2.31000000000000E+0
2.31000000000000E+0      0.00000000000000E+0      0.00000000000000E+0
0.00000000000000E+0      0.00000000000000E+0
   BmDistLoadG              9     417       Z       1     2.31000000000000E+0
2.31000000000000E+0      0.00000000000000E+0      0.00000000000000E+0
0.00000000000000E+0      0.00000000000000E+0
   BmDistLoadG              9     418       Z       1     2.31000000000000E+0
2.31000000000000E+0      0.00000000000000E+0      0.00000000000000E+0
0.00000000000000E+0      0.00000000000000E+0
   BmDistLoadG              9     419       Z       1     2.31000000000000E+0
2.31000000000000E+0      0.00000000000000E+0      0.00000000000000E+0
0.00000000000000E+0      0.00000000000000E+0
   BmDistLoadG              9     420       Z       1     2.31000000000000E+0
2.31000000000000E+0      0.00000000000000E+0      0.00000000000000E+0
0.00000000000000E+0      0.00000000000000E+0
   BmDistLoadG              9     421       Z       1     2.31000000000000E+0
2.31000000000000E+0      0.00000000000000E+0      0.00000000000000E+0
0.00000000000000E+0      0.00000000000000E+0
   BmDistLoadG              9     422       Z       1     2.31000000000000E+0
2.31000000000000E+0      0.00000000000000E+0      0.00000000000000E+0
0.00000000000000E+0      0.00000000000000E+0
   BmDistLoadG              9     423       Z       1     2.31000000000000E+0
2.31000000000000E+0      0.00000000000000E+0      0.00000000000000E+0
0.00000000000000E+0      0.00000000000000E+0
   BmDistLoadG              9     424       Z       1     2.31000000000000E+0
2.31000000000000E+0      0.00000000000000E+0      0.00000000000000E+0
0.00000000000000E+0      0.00000000000000E+0
   BmDistLoadG              9     425       Z       1     2.31000000000000E+0
2.31000000000000E+0      0.00000000000000E+0      0.00000000000000E+0
0.00000000000000E+0      0.00000000000000E+0
   BmDistLoadG              9     426       Z       1     2.31000000000000E+0
2.31000000000000E+0      0.00000000000000E+0      0.00000000000000E+0
0.00000000000000E+0      0.00000000000000E+0
   BmDistLoadG              9     427       Z       1     2.31000000000000E+0
```

2.31000000000000E+0 0.00000000000000E+0 0.00000000000000E+0
0.00000000000000E+0 0.00000000000000E+0
BmDistLoadG 9 428 Z 1 2.31000000000000E+0
2.31000000000000E+0 0.00000000000000E+0 0.00000000000000E+0
0.00000000000000E+0 0.00000000000000E+0
BmDistLoadG 9 429 Z 1 2.31000000000000E+0
2.31000000000000E+0 0.00000000000000E+0 0.00000000000000E+0
0.00000000000000E+0 0.00000000000000E+0
BmDistLoadG 9 430 Z 1 2.31000000000000E+0
2.31000000000000E+0 0.00000000000000E+0 0.00000000000000E+0
0.00000000000000E+0 0.00000000000000E+0
BmDistLoadG 9 431 Z 1 2.31000000000000E+0
2.31000000000000E+0 0.00000000000000E+0 0.00000000000000E+0
0.00000000000000E+0 0.00000000000000E+0
BmDistLoadG 9 432 Z 1 2.31000000000000E+0
2.31000000000000E+0 0.00000000000000E+0 0.00000000000000E+0
0.00000000000000E+0 0.00000000000000E+0
BmDistLoadG 9 433 Z 1 2.31000000000000E+0
2.31000000000000E+0 0.00000000000000E+0 0.00000000000000E+0
0.00000000000000E+0 0.00000000000000E+0
BmDistLoadG 9 434 Y 1 -3.30000000000000E+0
-3.30000000000000E+0 0.00000000000000E+0 0.00000000000000E+0
0.00000000000000E+0 0.00000000000000E+0
BmDistLoadG 9 435 Y 1 -3.30000000000000E+0
-3.30000000000000E+0 0.00000000000000E+0 0.00000000000000E+0
0.00000000000000E+0 0.00000000000000E+0
BmDistLoadG 9 436 Y 1 -3.30000000000000E+0
-3.30000000000000E+0 0.00000000000000E+0 0.00000000000000E+0
0.00000000000000E+0 0.00000000000000E+0
BmDistLoadG 9 437 Y 1 -3.30000000000000E+0
-3.30000000000000E+0 0.00000000000000E+0 0.00000000000000E+0
0.00000000000000E+0 0.00000000000000E+0
BmDistLoadG 9 438 Y 1 -3.30000000000000E+0
-3.30000000000000E+0 0.00000000000000E+0 0.00000000000000E+0
0.00000000000000E+0 0.00000000000000E+0
BmDistLoadG 9 449 Y 1 -1.76000000000000E+0
-1.76000000000000E+0 0.00000000000000E+0 0.00000000000000E+0
0.00000000000000E+0 0.00000000000000E+0
BmDistLoadG 9 450 Y 1 -1.76000000000000E+0
-1.76000000000000E+0 0.00000000000000E+0 0.00000000000000E+0
0.00000000000000E+0 0.00000000000000E+0
BmDistLoadG 9 451 Y 1 -1.76000000000000E+0
-1.76000000000000E+0 0.00000000000000E+0 0.00000000000000E+0
0.00000000000000E+0 0.00000000000000E+0
BmDistLoadG 9 452 Y 1 -1.76000000000000E+0
-1.76000000000000E+0 0.00000000000000E+0 0.00000000000000E+0
0.00000000000000E+0 0.00000000000000E+0
BmDistLoadG 9 453 Y 1 -1.76000000000000E+0
-1.76000000000000E+0 0.00000000000000E+0 0.00000000000000E+0
0.00000000000000E+0 0.00000000000000E+0
BmDistLoadG 9 454 Y 1 -1.76000000000000E+0
-1.76000000000000E+0 0.00000000000000E+0 0.00000000000000E+0
0.00000000000000E+0 0.00000000000000E+0
BmDistLoadG 9 455 Y 1 -1.76000000000000E+0

-1.76000000000000E+0 0.00000000000000E+0 0.00000000000000E+0
0.00000000000000E+0 0.00000000000000E+0
BmDistLoadG 9 456 Y 1 -1.76000000000000E+0
-1.76000000000000E+0 0.00000000000000E+0 0.00000000000000E+0
0.00000000000000E+0 0.00000000000000E+0
BmDistLoadG 9 457 Y 1 -1.76000000000000E+0
-1.76000000000000E+0 0.00000000000000E+0 0.00000000000000E+0
0.00000000000000E+0 0.00000000000000E+0
BmDistLoadG 9 458 Y 1 -1.76000000000000E+0
-1.76000000000000E+0 0.00000000000000E+0 0.00000000000000E+0
0.00000000000000E+0 0.00000000000000E+0
BmDistLoadG 9 459 Y 1 -1.76000000000000E+0
-1.76000000000000E+0 0.00000000000000E+0 0.00000000000000E+0
0.00000000000000E+0 0.00000000000000E+0
BmDistLoadG 9 460 Y 1 -1.76000000000000E+0
-1.76000000000000E+0 0.00000000000000E+0 0.00000000000000E+0
0.00000000000000E+0 0.00000000000000E+0
BmDistLoadG 9 461 Y 1 -1.76000000000000E+0
-1.76000000000000E+0 0.00000000000000E+0 0.00000000000000E+0
0.00000000000000E+0 0.00000000000000E+0
BmDistLoadG 9 462 Y 1 -1.76000000000000E+0
-1.76000000000000E+0 0.00000000000000E+0 0.00000000000000E+0
0.00000000000000E+0 0.00000000000000E+0
BmDistLoadG 9 463 Y 1 -1.76000000000000E+0
-1.76000000000000E+0 0.00000000000000E+0 0.00000000000000E+0
0.00000000000000E+0 0.00000000000000E+0
BmDistLoadG 9 464 Y 1 -1.76000000000000E+0
-1.76000000000000E+0 0.00000000000000E+0 0.00000000000000E+0
0.00000000000000E+0 0.00000000000000E+0
BmDistLoadG 9 465 Y 1 -1.76000000000000E+0
-1.76000000000000E+0 0.00000000000000E+0 0.00000000000000E+0
0.00000000000000E+0 0.00000000000000E+0
BmDistLoadG 9 466 Y 1 -1.76000000000000E+0
-1.76000000000000E+0 0.00000000000000E+0 0.00000000000000E+0
0.00000000000000E+0 0.00000000000000E+0
BmDistLoadG 9 467 Y 1 -1.76000000000000E+0
-1.76000000000000E+0 0.00000000000000E+0 0.00000000000000E+0
0.00000000000000E+0 0.00000000000000E+0
BmDistLoadG 9 468 Y 1 -1.76000000000000E+0
-1.76000000000000E+0 0.00000000000000E+0 0.00000000000000E+0
0.00000000000000E+0 0.00000000000000E+0
BmDistLoadG 9 469 Y 1 -1.76000000000000E+0
-1.76000000000000E+0 0.00000000000000E+0 0.00000000000000E+0
0.00000000000000E+0 0.00000000000000E+0
BmDistLoadG 9 470 Y 1 -1.76000000000000E+0
-1.76000000000000E+0 0.00000000000000E+0 0.00000000000000E+0
0.00000000000000E+0 0.00000000000000E+0
BmDistLoadG 9 471 Y 1 -1.76000000000000E+0
-1.76000000000000E+0 0.00000000000000E+0 0.00000000000000E+0
0.00000000000000E+0 0.00000000000000E+0
BmDistLoadG 9 472 Y 1 -1.76000000000000E+0
-1.76000000000000E+0 0.00000000000000E+0 0.00000000000000E+0
0.00000000000000E+0 0.00000000000000E+0
BmDistLoadG 9 473 Y 1 -1.76000000000000E+0

-1.76000000000000E+0 0.00000000000000E+0 0.00000000000000E+0
0.00000000000000E+0 0.00000000000000E+0
BmDistLoadG 9 474 Y 1 -1.76000000000000E+0
-1.76000000000000E+0 0.00000000000000E+0 0.00000000000000E+0
0.00000000000000E+0 0.00000000000000E+0
BmDistLoadG 9 475 Y 1 -1.76000000000000E+0
-1.76000000000000E+0 0.00000000000000E+0 0.00000000000000E+0
0.00000000000000E+0 0.00000000000000E+0
BmDistLoadG 9 476 Y 1 -1.76000000000000E+0
-1.76000000000000E+0 0.00000000000000E+0 0.00000000000000E+0
0.00000000000000E+0 0.00000000000000E+0
BmDistLoadG 9 477 Y 1 -1.76000000000000E+0
-1.76000000000000E+0 0.00000000000000E+0 0.00000000000000E+0
0.00000000000000E+0 0.00000000000000E+0
BmDistLoadG 9 478 Y 1 -1.76000000000000E+0
-1.76000000000000E+0 0.00000000000000E+0 0.00000000000000E+0
0.00000000000000E+0 0.00000000000000E+0
BmDistLoadG 9 479 Y 1 -1.76000000000000E+0
-1.76000000000000E+0 0.00000000000000E+0 0.00000000000000E+0
0.00000000000000E+0 0.00000000000000E+0
BmDistLoadG 9 480 Y 1 -1.76000000000000E+0
-1.76000000000000E+0 0.00000000000000E+0 0.00000000000000E+0
0.00000000000000E+0 0.00000000000000E+0
BmDistLoadG 9 481 Y 1 -1.76000000000000E+0
-1.76000000000000E+0 0.00000000000000E+0 0.00000000000000E+0
0.00000000000000E+0 0.00000000000000E+0
BmDistLoadG 9 482 Y 1 -1.76000000000000E+0
-1.76000000000000E+0 0.00000000000000E+0 0.00000000000000E+0
0.00000000000000E+0 0.00000000000000E+0
BmDistLoadG 9 483 Y 1 -1.76000000000000E+0
-1.76000000000000E+0 0.00000000000000E+0 0.00000000000000E+0
0.00000000000000E+0 0.00000000000000E+0
BmDistLoadG 9 484 Y 1 -1.76000000000000E+0
-1.76000000000000E+0 0.00000000000000E+0 0.00000000000000E+0
0.00000000000000E+0 0.00000000000000E+0
BmDistLoadG 9 485 Y 1 -1.76000000000000E+0
-1.76000000000000E+0 0.00000000000000E+0 0.00000000000000E+0
0.00000000000000E+0 0.00000000000000E+0
BmDistLoadG 9 486 Y 1 -1.76000000000000E+0
-1.76000000000000E+0 0.00000000000000E+0 0.00000000000000E+0
0.00000000000000E+0 0.00000000000000E+0
BmDistLoadG 9 487 Y 1 -1.76000000000000E+0
-1.76000000000000E+0 0.00000000000000E+0 0.00000000000000E+0
0.00000000000000E+0 0.00000000000000E+0
BmDistLoadG 9 488 Y 1 -1.76000000000000E+0
-1.76000000000000E+0 0.00000000000000E+0 0.00000000000000E+0
0.00000000000000E+0 0.00000000000000E+0
BmDistLoadG 9 489 Y 1 -1.76000000000000E+0
-1.76000000000000E+0 0.00000000000000E+0 0.00000000000000E+0
0.00000000000000E+0 0.00000000000000E+0
BmDistLoadG 9 490 Y 1 -1.76000000000000E+0
-1.76000000000000E+0 0.00000000000000E+0 0.00000000000000E+0
0.00000000000000E+0 0.00000000000000E+0
BmDistLoadG 9 491 Y 1 -1.76000000000000E+0

-1.76000000000000E+0 0.00000000000000E+0 0.00000000000000E+0
0.00000000000000E+0 0.00000000000000E+0
BmDistLoadG 9 492 Y 1 -1.76000000000000E+0
-1.76000000000000E+0 0.00000000000000E+0 0.00000000000000E+0
0.00000000000000E+0 0.00000000000000E+0
BmDistLoadG 9 493 Y 1 -1.76000000000000E+0
-1.76000000000000E+0 0.00000000000000E+0 0.00000000000000E+0
0.00000000000000E+0 0.00000000000000E+0
BmDistLoadG 9 494 Y 1 -1.76000000000000E+0
-1.76000000000000E+0 0.00000000000000E+0 0.00000000000000E+0
0.00000000000000E+0 0.00000000000000E+0
BmDistLoadG 9 495 Y 1 -1.76000000000000E+0
-1.76000000000000E+0 0.00000000000000E+0 0.00000000000000E+0
0.00000000000000E+0 0.00000000000000E+0
BmDistLoadG 9 496 Y 1 -1.76000000000000E+0
-1.76000000000000E+0 0.00000000000000E+0 0.00000000000000E+0
0.00000000000000E+0 0.00000000000000E+0
BmDistLoadG 9 497 Y 1 -1.76000000000000E+0
-1.76000000000000E+0 0.00000000000000E+0 0.00000000000000E+0
0.00000000000000E+0 0.00000000000000E+0
BmDistLoadG 9 498 Y 1 -1.76000000000000E+0
-1.76000000000000E+0 0.00000000000000E+0 0.00000000000000E+0
0.00000000000000E+0 0.00000000000000E+0
BmDistLoadG 9 499 Y 1 -1.76000000000000E+0
-1.76000000000000E+0 0.00000000000000E+0 0.00000000000000E+0
0.00000000000000E+0 0.00000000000000E+0
BmDistLoadG 9 500 Y 1 -1.76000000000000E+0
-1.76000000000000E+0 0.00000000000000E+0 0.00000000000000E+0
0.00000000000000E+0 0.00000000000000E+0
BmDistLoadG 9 501 Y 1 -1.76000000000000E+0
-1.76000000000000E+0 0.00000000000000E+0 0.00000000000000E+0
0.00000000000000E+0 0.00000000000000E+0
BmDistLoadG 9 502 Y 1 -1.76000000000000E+0
-1.76000000000000E+0 0.00000000000000E+0 0.00000000000000E+0
0.00000000000000E+0 0.00000000000000E+0
BmDistLoadG 9 503 Y 1 -1.76000000000000E+0
-1.76000000000000E+0 0.00000000000000E+0 0.00000000000000E+0
0.00000000000000E+0 0.00000000000000E+0
BmDistLoadG 9 504 Y 1 -1.76000000000000E+0
-1.76000000000000E+0 0.00000000000000E+0 0.00000000000000E+0
0.00000000000000E+0 0.00000000000000E+0
BmDistLoadG 9 505 Y 1 -1.76000000000000E+0
-1.76000000000000E+0 0.00000000000000E+0 0.00000000000000E+0
0.00000000000000E+0 0.00000000000000E+0
BmDistLoadG 9 506 Y 1 -1.76000000000000E+0
-1.76000000000000E+0 0.00000000000000E+0 0.00000000000000E+0
0.00000000000000E+0 0.00000000000000E+0
BmDistLoadG 9 507 Y 1 -1.76000000000000E+0
-1.76000000000000E+0 0.00000000000000E+0 0.00000000000000E+0
0.00000000000000E+0 0.00000000000000E+0
BmDistLoadG 9 508 Y 1 -1.76000000000000E+0
-1.76000000000000E+0 0.00000000000000E+0 0.00000000000000E+0
0.00000000000000E+0 0.00000000000000E+0
BmDistLoadG 9 509 Y 1 -1.76000000000000E+0

-1.76000000000000E+0 0.00000000000000E+0 0.00000000000000E+0
0.00000000000000E+0 0.00000000000000E+0
BmDistLoadG 9 510 Y 1 -1.76000000000000E+0
-1.76000000000000E+0 0.00000000000000E+0 0.00000000000000E+0
0.00000000000000E+0 0.00000000000000E+0
BmDistLoadG 9 511 Y 1 -1.76000000000000E+0
-1.76000000000000E+0 0.00000000000000E+0 0.00000000000000E+0
0.00000000000000E+0 0.00000000000000E+0
BmDistLoadG 9 512 Y 1 -1.76000000000000E+0
-1.76000000000000E+0 0.00000000000000E+0 0.00000000000000E+0
0.00000000000000E+0 0.00000000000000E+0
BmDistLoadG 9 513 Y 1 -1.76000000000000E+0
-1.76000000000000E+0 0.00000000000000E+0 0.00000000000000E+0
0.00000000000000E+0 0.00000000000000E+0
BmDistLoadG 9 514 Y 1 -1.76000000000000E+0
-1.76000000000000E+0 0.00000000000000E+0 0.00000000000000E+0
0.00000000000000E+0 0.00000000000000E+0
BmDistLoadG 9 515 Y 1 -1.76000000000000E+0
-1.76000000000000E+0 0.00000000000000E+0 0.00000000000000E+0
0.00000000000000E+0 0.00000000000000E+0
BmDistLoadG 9 516 Y 1 -1.76000000000000E+0
-1.76000000000000E+0 0.00000000000000E+0 0.00000000000000E+0
0.00000000000000E+0 0.00000000000000E+0
BmDistLoadG 9 517 Y 1 -1.76000000000000E+0
-1.76000000000000E+0 0.00000000000000E+0 0.00000000000000E+0
0.00000000000000E+0 0.00000000000000E+0
BmDistLoadG 9 518 Y 1 -1.76000000000000E+0
-1.76000000000000E+0 0.00000000000000E+0 0.00000000000000E+0
0.00000000000000E+0 0.00000000000000E+0
BmDistLoadG 9 519 Y 1 -1.76000000000000E+0
-1.76000000000000E+0 0.00000000000000E+0 0.00000000000000E+0
0.00000000000000E+0 0.00000000000000E+0
BmDistLoadG 9 520 Y 1 -1.76000000000000E+0
-1.76000000000000E+0 0.00000000000000E+0 0.00000000000000E+0
0.00000000000000E+0 0.00000000000000E+0
BmDistLoadG 9 521 Y 1 -1.76000000000000E+0
-1.76000000000000E+0 0.00000000000000E+0 0.00000000000000E+0
0.00000000000000E+0 0.00000000000000E+0
BmDistLoadG 9 522 Y 1 -1.76000000000000E+0
-1.76000000000000E+0 0.00000000000000E+0 0.00000000000000E+0
0.00000000000000E+0 0.00000000000000E+0
BmDistLoadG 9 523 Y 1 -1.76000000000000E+0
-1.76000000000000E+0 0.00000000000000E+0 0.00000000000000E+0
0.00000000000000E+0 0.00000000000000E+0
BmDistLoadG 9 524 Y 1 -1.76000000000000E+0
-1.76000000000000E+0 0.00000000000000E+0 0.00000000000000E+0
0.00000000000000E+0 0.00000000000000E+0
BmDistLoadG 9 525 Y 1 -1.76000000000000E+0
-1.76000000000000E+0 0.00000000000000E+0 0.00000000000000E+0
0.00000000000000E+0 0.00000000000000E+0
BmDistLoadG 9 526 Y 1 -1.76000000000000E+0
-1.76000000000000E+0 0.00000000000000E+0 0.00000000000000E+0
0.00000000000000E+0 0.00000000000000E+0
BmDistLoadG 9 527 Y 1 -1.76000000000000E+0

-1.76000000000000E+0 0.00000000000000E+0 0.00000000000000E+0
0.00000000000000E+0 0.00000000000000E+0
BmDistLoadG 9 528 Y 1 -1.76000000000000E+0
-1.76000000000000E+0 0.00000000000000E+0 0.00000000000000E+0
0.00000000000000E+0 0.00000000000000E+0
BmDistLoadG 9 529 Y 1 -1.76000000000000E+0
-1.76000000000000E+0 0.00000000000000E+0 0.00000000000000E+0
0.00000000000000E+0 0.00000000000000E+0
BmDistLoadG 9 530 Y 1 -1.76000000000000E+0
-1.76000000000000E+0 0.00000000000000E+0 0.00000000000000E+0
0.00000000000000E+0 0.00000000000000E+0
BmDistLoadG 9 531 Y 1 -1.76000000000000E+0
-1.76000000000000E+0 0.00000000000000E+0 0.00000000000000E+0
0.00000000000000E+0 0.00000000000000E+0
BmDistLoadG 9 532 Y 1 -1.76000000000000E+0
-1.76000000000000E+0 0.00000000000000E+0 0.00000000000000E+0
0.00000000000000E+0 0.00000000000000E+0
BmDistLoadG 9 533 Y 1 -1.76000000000000E+0
-1.76000000000000E+0 0.00000000000000E+0 0.00000000000000E+0
0.00000000000000E+0 0.00000000000000E+0
BmDistLoadG 9 534 Y 1 -1.76000000000000E+0
-1.76000000000000E+0 0.00000000000000E+0 0.00000000000000E+0
0.00000000000000E+0 0.00000000000000E+0
BmDistLoadG 9 535 Y 1 -1.76000000000000E+0
-1.76000000000000E+0 0.00000000000000E+0 0.00000000000000E+0
0.00000000000000E+0 0.00000000000000E+0
BmDistLoadG 9 536 Y 1 -1.76000000000000E+0
-1.76000000000000E+0 0.00000000000000E+0 0.00000000000000E+0
0.00000000000000E+0 0.00000000000000E+0
BmDistLoadG 9 537 Y 1 -1.76000000000000E+0
-1.76000000000000E+0 0.00000000000000E+0 0.00000000000000E+0
0.00000000000000E+0 0.00000000000000E+0
BmDistLoadG 9 538 Y 1 -1.76000000000000E+0
-1.76000000000000E+0 0.00000000000000E+0 0.00000000000000E+0
0.00000000000000E+0 0.00000000000000E+0
BmDistLoadG 9 539 Y 1 -1.76000000000000E+0
-1.76000000000000E+0 0.00000000000000E+0 0.00000000000000E+0
0.00000000000000E+0 0.00000000000000E+0
BmDistLoadG 9 540 Y 1 -1.76000000000000E+0
-1.76000000000000E+0 0.00000000000000E+0 0.00000000000000E+0
0.00000000000000E+0 0.00000000000000E+0
BmDistLoadG 9 541 Y 1 -1.76000000000000E+0
-1.76000000000000E+0 0.00000000000000E+0 0.00000000000000E+0
0.00000000000000E+0 0.00000000000000E+0
BmDistLoadG 9 542 Y 1 -1.76000000000000E+0
-1.76000000000000E+0 0.00000000000000E+0 0.00000000000000E+0
0.00000000000000E+0 0.00000000000000E+0
BmDistLoadG 9 543 Y 1 -1.76000000000000E+0
-1.76000000000000E+0 0.00000000000000E+0 0.00000000000000E+0
0.00000000000000E+0 0.00000000000000E+0
BmDistLoadG 9 544 Y 1 -1.76000000000000E+0
-1.76000000000000E+0 0.00000000000000E+0 0.00000000000000E+0
0.00000000000000E+0 0.00000000000000E+0
BmDistLoadG 9 545 Y 1 -1.76000000000000E+0

-1.76000000000000E+0 0.00000000000000E+0 0.00000000000000E+0
0.00000000000000E+0 0.00000000000000E+0
BmDistLoadG 9 546 Y 1 -1.76000000000000E+0
-1.76000000000000E+0 0.00000000000000E+0 0.00000000000000E+0
0.00000000000000E+0 0.00000000000000E+0
BmDistLoadG 9 547 Y 1 -1.76000000000000E+0
-1.76000000000000E+0 0.00000000000000E+0 0.00000000000000E+0
0.00000000000000E+0 0.00000000000000E+0
BmDistLoadG 9 548 Y 1 -1.76000000000000E+0
-1.76000000000000E+0 0.00000000000000E+0 0.00000000000000E+0
0.00000000000000E+0 0.00000000000000E+0
BmDistLoadG 9 549 Y 1 -1.76000000000000E+0
-1.76000000000000E+0 0.00000000000000E+0 0.00000000000000E+0
0.00000000000000E+0 0.00000000000000E+0
BmDistLoadG 9 550 Y 1 -1.76000000000000E+0
-1.76000000000000E+0 0.00000000000000E+0 0.00000000000000E+0
0.00000000000000E+0 0.00000000000000E+0
BmDistLoadG 9 551 Y 1 -1.76000000000000E+0
-1.76000000000000E+0 0.00000000000000E+0 0.00000000000000E+0
0.00000000000000E+0 0.00000000000000E+0
BmDistLoadG 9 552 Y 1 -1.76000000000000E+0
-1.76000000000000E+0 0.00000000000000E+0 0.00000000000000E+0
0.00000000000000E+0 0.00000000000000E+0
BmDistLoadG 9 553 Y 1 -1.76000000000000E+0
-1.76000000000000E+0 0.00000000000000E+0 0.00000000000000E+0
0.00000000000000E+0 0.00000000000000E+0
BmDistLoadG 9 554 Y 1 -1.76000000000000E+0
-1.76000000000000E+0 0.00000000000000E+0 0.00000000000000E+0
0.00000000000000E+0 0.00000000000000E+0
BmDistLoadG 9 555 Y 1 -1.76000000000000E+0
-1.76000000000000E+0 0.00000000000000E+0 0.00000000000000E+0
0.00000000000000E+0 0.00000000000000E+0
BmDistLoadG 9 556 Y 1 -1.76000000000000E+0
-1.76000000000000E+0 0.00000000000000E+0 0.00000000000000E+0
0.00000000000000E+0 0.00000000000000E+0
BmDistLoadG 9 557 Y 1 -1.76000000000000E+0
-1.76000000000000E+0 0.00000000000000E+0 0.00000000000000E+0
0.00000000000000E+0 0.00000000000000E+0
BmDistLoadG 9 558 Y 1 -1.76000000000000E+0
-1.76000000000000E+0 0.00000000000000E+0 0.00000000000000E+0
0.00000000000000E+0 0.00000000000000E+0
BmDistLoadG 9 635 Y 1 -1.76000000000000E+0
-1.76000000000000E+0 0.00000000000000E+0 0.00000000000000E+0
0.00000000000000E+0 0.00000000000000E+0
BmDistLoadG 9 636 Y 1 -1.76000000000000E+0
-1.76000000000000E+0 0.00000000000000E+0 0.00000000000000E+0
0.00000000000000E+0 0.00000000000000E+0
BmDistLoadG 9 649 Z 1 1.15500000000000E+0
1.15500000000000E+0 0.00000000000000E+0 0.00000000000000E+0
0.00000000000000E+0 0.00000000000000E+0
BmDistLoadG 9 650 Z 1 1.15500000000000E+0
1.15500000000000E+0 0.00000000000000E+0 0.00000000000000E+0
0.00000000000000E+0 0.00000000000000E+0
BmDistLoadG 9 651 Z 1 1.15500000000000E+0

```
1.15500000000000E+0      0.00000000000000E+0      0.00000000000000E+0
0.00000000000000E+0      0.00000000000000E+0
   BmDistLoadG             9     652     Z      1     1.15500000000000E+0
1.15500000000000E+0      0.00000000000000E+0      0.00000000000000E+0
0.00000000000000E+0      0.00000000000000E+0
   BmDistLoadG             9     653     Z      1     2.31000000000000E+0
2.31000000000000E+0      0.00000000000000E+0      0.00000000000000E+0
0.00000000000000E+0      0.00000000000000E+0
   BmDistLoadG             9     654     Z      1     2.31000000000000E+0
2.31000000000000E+0      0.00000000000000E+0      0.00000000000000E+0
0.00000000000000E+0      0.00000000000000E+0
   BmDistLoadG             9     655     Z      1     2.31000000000000E+0
2.31000000000000E+0      0.00000000000000E+0      0.00000000000000E+0
0.00000000000000E+0      0.00000000000000E+0
   BmDistLoadG             9     656     Z      1     2.31000000000000E+0
2.31000000000000E+0      0.00000000000000E+0      0.00000000000000E+0
0.00000000000000E+0      0.00000000000000E+0
   BmDistLoadG             9     657     Z      1     2.31000000000000E+0
2.31000000000000E+0      0.00000000000000E+0      0.00000000000000E+0
0.00000000000000E+0      0.00000000000000E+0
   BmDistLoadG             9     658     Z      1     2.31000000000000E+0
2.31000000000000E+0      0.00000000000000E+0      0.00000000000000E+0
0.00000000000000E+0      0.00000000000000E+0
   BmDistLoadG             9     659     Z      1     2.31000000000000E+0
2.31000000000000E+0      0.00000000000000E+0      0.00000000000000E+0
0.00000000000000E+0      0.00000000000000E+0
   BmDistLoadG             9     660     Z      1     2.31000000000000E+0
2.31000000000000E+0      0.00000000000000E+0      0.00000000000000E+0
0.00000000000000E+0      0.00000000000000E+0
   BmDistLoadG             9     661     Z      1     2.31000000000000E+0
2.31000000000000E+0      0.00000000000000E+0      0.00000000000000E+0
0.00000000000000E+0      0.00000000000000E+0
   BmDistLoadG             9     662     Z      1     2.31000000000000E+0
2.31000000000000E+0      0.00000000000000E+0      0.00000000000000E+0
0.00000000000000E+0      0.00000000000000E+0
   BmDistLoadG             9     663     Z      1     2.31000000000000E+0
2.31000000000000E+0      0.00000000000000E+0      0.00000000000000E+0
0.00000000000000E+0      0.00000000000000E+0
   BmDistLoadG             9     664     Z      1     2.31000000000000E+0
2.31000000000000E+0      0.00000000000000E+0      0.00000000000000E+0
0.00000000000000E+0      0.00000000000000E+0
   BmDistLoadG             9     665     Z      1     2.31000000000000E+0
2.31000000000000E+0      0.00000000000000E+0      0.00000000000000E+0
0.00000000000000E+0      0.00000000000000E+0
   BmDistLoadG             9     666     Z      1     2.31000000000000E+0
2.31000000000000E+0      0.00000000000000E+0      0.00000000000000E+0
0.00000000000000E+0      0.00000000000000E+0
   BmDistLoadG             9     667     Z      1     2.31000000000000E+0
2.31000000000000E+0      0.00000000000000E+0      0.00000000000000E+0
0.00000000000000E+0      0.00000000000000E+0
   BmDistLoadG             9     668     Z      1     2.31000000000000E+0
2.31000000000000E+0      0.00000000000000E+0      0.00000000000000E+0
0.00000000000000E+0      0.00000000000000E+0
```

```
/ ____________________________________________________________________________
/ BEAM GLOBAL DISTRIBUTED LOADS
/ Q03a - Effetti Aerodinamici Convogli Y+
   BmDistLoadG              8      13      Z      1     1.32000000000000E+0
1.32000000000000E+0      0.00000000000000E+0      0.00000000000000E+0
0.00000000000000E+0      0.00000000000000E+0
   BmDistLoadG              8      14      Z      1     2.64000000000000E+0
2.64000000000000E+0      0.00000000000000E+0      0.00000000000000E+0
0.00000000000000E+0      0.00000000000000E+0
   BmDistLoadG              8      15      Z      1     2.64000000000000E+0
2.64000000000000E+0      0.00000000000000E+0      0.00000000000000E+0
0.00000000000000E+0      0.00000000000000E+0
   BmDistLoadG              8      16      Z      1     2.64000000000000E+0
2.64000000000000E+0      0.00000000000000E+0      0.00000000000000E+0
0.00000000000000E+0      0.00000000000000E+0
   BmDistLoadG              8      17      Z      1     2.64000000000000E+0
2.64000000000000E+0      0.00000000000000E+0      0.00000000000000E+0
0.00000000000000E+0      0.00000000000000E+0
   BmDistLoadG              8      18      Z      1     2.64000000000000E+0
2.64000000000000E+0      0.00000000000000E+0      0.00000000000000E+0
0.00000000000000E+0      0.00000000000000E+0
   BmDistLoadG              8      19      Z      1     2.64000000000000E+0
2.64000000000000E+0      0.00000000000000E+0      0.00000000000000E+0
0.00000000000000E+0      0.00000000000000E+0
   BmDistLoadG              8      20      Z      1     2.64000000000000E+0
2.64000000000000E+0      0.00000000000000E+0      0.00000000000000E+0
0.00000000000000E+0      0.00000000000000E+0
   BmDistLoadG              8      21      Z      1     2.64000000000000E+0
2.64000000000000E+0      0.00000000000000E+0      0.00000000000000E+0
0.00000000000000E+0      0.00000000000000E+0
   BmDistLoadG              8      22      Z      1     1.32000000000000E+0
1.32000000000000E+0      0.00000000000000E+0      0.00000000000000E+0
0.00000000000000E+0      0.00000000000000E+0
   BmDistLoadG              8      69      Y      1     6.00000000000000E-1
6.00000000000000E-1      0.00000000000000E+0      0.00000000000000E+0
0.00000000000000E+0      0.00000000000000E+0
   BmDistLoadG              8      70      Y      1     6.00000000000000E-1
6.00000000000000E-1      0.00000000000000E+0      0.00000000000000E+0
0.00000000000000E+0      0.00000000000000E+0
   BmDistLoadG              8      71      Y      1     6.00000000000000E-1
6.00000000000000E-1      0.00000000000000E+0      0.00000000000000E+0
0.00000000000000E+0      0.00000000000000E+0
   BmDistLoadG              8      72      Y      1     6.00000000000000E-1
6.00000000000000E-1      0.00000000000000E+0      0.00000000000000E+0
0.00000000000000E+0      0.00000000000000E+0
   BmDistLoadG              8      73      Y      1     6.00000000000000E-1
6.00000000000000E-1      0.00000000000000E+0      0.00000000000000E+0
0.00000000000000E+0      0.00000000000000E+0
   BmDistLoadG              8      74      Y      1     1.20000000000000E+0
1.20000000000000E+0      0.00000000000000E+0      0.00000000000000E+0
0.00000000000000E+0      0.00000000000000E+0
   BmDistLoadG              8      75      Y      1     1.20000000000000E+0
1.20000000000000E+0      0.00000000000000E+0      0.00000000000000E+0
0.00000000000000E+0      0.00000000000000E+0
```

```
   BmDistLoadG              8      76      Y      1     1.20000000000000E+0
1.20000000000000E+0      0.00000000000000E+0      0.00000000000000E+0
0.00000000000000E+0      0.00000000000000E+0
   BmDistLoadG              8      77      Y      1     1.20000000000000E+0
1.20000000000000E+0      0.00000000000000E+0      0.00000000000000E+0
0.00000000000000E+0      0.00000000000000E+0
   BmDistLoadG              8      78      Y      1     1.20000000000000E+0
1.20000000000000E+0      0.00000000000000E+0      0.00000000000000E+0
0.00000000000000E+0      0.00000000000000E+0
   BmDistLoadG              8      79      Y      1     1.20000000000000E+0
1.20000000000000E+0      0.00000000000000E+0      0.00000000000000E+0
0.00000000000000E+0      0.00000000000000E+0
   BmDistLoadG              8      80      Y      1     1.20000000000000E+0
1.20000000000000E+0      0.00000000000000E+0      0.00000000000000E+0
0.00000000000000E+0      0.00000000000000E+0
   BmDistLoadG              8      81      Y      1     1.20000000000000E+0
1.20000000000000E+0      0.00000000000000E+0      0.00000000000000E+0
0.00000000000000E+0      0.00000000000000E+0
   BmDistLoadG              8      82      Y      1     1.20000000000000E+0
1.20000000000000E+0      0.00000000000000E+0      0.00000000000000E+0
0.00000000000000E+0      0.00000000000000E+0
   BmDistLoadG              8      83      Y      1     1.20000000000000E+0
1.20000000000000E+0      0.00000000000000E+0      0.00000000000000E+0
0.00000000000000E+0      0.00000000000000E+0
   BmDistLoadG              8      84      Y      1     1.20000000000000E+0
1.20000000000000E+0      0.00000000000000E+0      0.00000000000000E+0
0.00000000000000E+0      0.00000000000000E+0
   BmDistLoadG              8      85      Y      1     1.20000000000000E+0
1.20000000000000E+0      0.00000000000000E+0      0.00000000000000E+0
0.00000000000000E+0      0.00000000000000E+0
   BmDistLoadG              8      86      Y      1     1.20000000000000E+0
1.20000000000000E+0      0.00000000000000E+0      0.00000000000000E+0
0.00000000000000E+0      0.00000000000000E+0
   BmDistLoadG              8      87      Y      1     1.20000000000000E+0
1.20000000000000E+0      0.00000000000000E+0      0.00000000000000E+0
0.00000000000000E+0      0.00000000000000E+0
   BmDistLoadG              8      88      Y      1     1.20000000000000E+0
1.20000000000000E+0      0.00000000000000E+0      0.00000000000000E+0
0.00000000000000E+0      0.00000000000000E+0
   BmDistLoadG              8      89      Y      1     1.20000000000000E+0
1.20000000000000E+0      0.00000000000000E+0      0.00000000000000E+0
0.00000000000000E+0      0.00000000000000E+0
   BmDistLoadG              8      90      Y      1     1.20000000000000E+0
1.20000000000000E+0      0.00000000000000E+0      0.00000000000000E+0
0.00000000000000E+0      0.00000000000000E+0
   BmDistLoadG              8      91      Y      1     1.20000000000000E+0
1.20000000000000E+0      0.00000000000000E+0      0.00000000000000E+0
0.00000000000000E+0      0.00000000000000E+0
   BmDistLoadG              8      92      Y      1     1.20000000000000E+0
1.20000000000000E+0      0.00000000000000E+0      0.00000000000000E+0
0.00000000000000E+0      0.00000000000000E+0
   BmDistLoadG              8      93      Y      1     1.20000000000000E+0
1.20000000000000E+0      0.00000000000000E+0      0.00000000000000E+0
0.00000000000000E+0      0.00000000000000E+0
```

```
   BmDistLoadG              8      94       Y      1     1.20000000000000E+0
1.20000000000000E+0      0.00000000000000E+0      0.00000000000000E+0
0.00000000000000E+0      0.00000000000000E+0
   BmDistLoadG              8      95       Y      1     1.20000000000000E+0
1.20000000000000E+0      0.00000000000000E+0      0.00000000000000E+0
0.00000000000000E+0      0.00000000000000E+0
   BmDistLoadG              8      96       Y      1     1.20000000000000E+0
1.20000000000000E+0      0.00000000000000E+0      0.00000000000000E+0
0.00000000000000E+0      0.00000000000000E+0
   BmDistLoadG              8      97       Y      1     1.20000000000000E+0
1.20000000000000E+0      0.00000000000000E+0      0.00000000000000E+0
0.00000000000000E+0      0.00000000000000E+0
   BmDistLoadG              8      98       Y      1     1.20000000000000E+0
1.20000000000000E+0      0.00000000000000E+0      0.00000000000000E+0
0.00000000000000E+0      0.00000000000000E+0
   BmDistLoadG              8      99       Y      1     1.20000000000000E+0
1.20000000000000E+0      0.00000000000000E+0      0.00000000000000E+0
0.00000000000000E+0      0.00000000000000E+0
   BmDistLoadG              8     100       Y      1     1.20000000000000E+0
1.20000000000000E+0      0.00000000000000E+0      0.00000000000000E+0
0.00000000000000E+0      0.00000000000000E+0
   BmDistLoadG              8     101       Y      1     1.20000000000000E+0
1.20000000000000E+0      0.00000000000000E+0      0.00000000000000E+0
0.00000000000000E+0      0.00000000000000E+0
   BmDistLoadG              8     102       Y      1     1.20000000000000E+0
1.20000000000000E+0      0.00000000000000E+0      0.00000000000000E+0
0.00000000000000E+0      0.00000000000000E+0
   BmDistLoadG              8     103       Y      1     1.20000000000000E+0
1.20000000000000E+0      0.00000000000000E+0      0.00000000000000E+0
0.00000000000000E+0      0.00000000000000E+0
   BmDistLoadG              8     104       Y      1     1.20000000000000E+0
1.20000000000000E+0      0.00000000000000E+0      0.00000000000000E+0
0.00000000000000E+0      0.00000000000000E+0
   BmDistLoadG              8     105       Y      1     1.20000000000000E+0
1.20000000000000E+0      0.00000000000000E+0      0.00000000000000E+0
0.00000000000000E+0      0.00000000000000E+0
   BmDistLoadG              8     106       Y      1     1.20000000000000E+0
1.20000000000000E+0      0.00000000000000E+0      0.00000000000000E+0
0.00000000000000E+0      0.00000000000000E+0
   BmDistLoadG              8     107       Y      1     1.20000000000000E+0
1.20000000000000E+0      0.00000000000000E+0      0.00000000000000E+0
0.00000000000000E+0      0.00000000000000E+0
   BmDistLoadG              8     108       Y      1     1.20000000000000E+0
1.20000000000000E+0      0.00000000000000E+0      0.00000000000000E+0
0.00000000000000E+0      0.00000000000000E+0
   BmDistLoadG              8     109       Y      1     1.20000000000000E+0
1.20000000000000E+0      0.00000000000000E+0      0.00000000000000E+0
0.00000000000000E+0      0.00000000000000E+0
   BmDistLoadG              8     110       Y      1     1.20000000000000E+0
1.20000000000000E+0      0.00000000000000E+0      0.00000000000000E+0
0.00000000000000E+0      0.00000000000000E+0
   BmDistLoadG              8     111       Y      1     1.20000000000000E+0
1.20000000000000E+0      0.00000000000000E+0      0.00000000000000E+0
0.00000000000000E+0      0.00000000000000E+0
```

```
   BmDistLoadG           8      112       Y       1      1.20000000000000E+0
1.20000000000000E+0    0.00000000000000E+0    0.00000000000000E+0
0.00000000000000E+0    0.00000000000000E+0
   BmDistLoadG           8      113       Y       1      1.20000000000000E+0
1.20000000000000E+0    0.00000000000000E+0    0.00000000000000E+0
0.00000000000000E+0    0.00000000000000E+0
   BmDistLoadG           8      114       Y       1      6.00000000000000E-1
6.00000000000000E-1    0.00000000000000E+0    0.00000000000000E+0
0.00000000000000E+0    0.00000000000000E+0
   BmDistLoadG           8      115       Y       1      6.00000000000000E-1
6.00000000000000E-1    0.00000000000000E+0    0.00000000000000E+0
0.00000000000000E+0    0.00000000000000E+0
   BmDistLoadG           8      116       Y       1      6.00000000000000E-1
6.00000000000000E-1    0.00000000000000E+0    0.00000000000000E+0
0.00000000000000E+0    0.00000000000000E+0
   BmDistLoadG           8      117       Y       1      6.00000000000000E-1
6.00000000000000E-1    0.00000000000000E+0    0.00000000000000E+0
0.00000000000000E+0    0.00000000000000E+0
   BmDistLoadG           8      118       Y       1      6.00000000000000E-1
6.00000000000000E-1    0.00000000000000E+0    0.00000000000000E+0
0.00000000000000E+0    0.00000000000000E+0
   BmDistLoadG           8      119       Y       1      6.00000000000000E-1
6.00000000000000E-1    0.00000000000000E+0    0.00000000000000E+0
0.00000000000000E+0    0.00000000000000E+0
   BmDistLoadG           8      120       Y       1      6.00000000000000E-1
6.00000000000000E-1    0.00000000000000E+0    0.00000000000000E+0
0.00000000000000E+0    0.00000000000000E+0
   BmDistLoadG           8      121       Y       1      6.00000000000000E-1
6.00000000000000E-1    0.00000000000000E+0    0.00000000000000E+0
0.00000000000000E+0    0.00000000000000E+0
   BmDistLoadG           8      122       Y       1      6.00000000000000E-1
6.00000000000000E-1    0.00000000000000E+0    0.00000000000000E+0
0.00000000000000E+0    0.00000000000000E+0
   BmDistLoadG           8      123       Y       1      6.00000000000000E-1
6.00000000000000E-1    0.00000000000000E+0    0.00000000000000E+0
0.00000000000000E+0    0.00000000000000E+0
   BmDistLoadG           8      124       Y       1      1.20000000000000E+0
1.20000000000000E+0    0.00000000000000E+0    0.00000000000000E+0
0.00000000000000E+0    0.00000000000000E+0
   BmDistLoadG           8      125       Y       1      1.20000000000000E+0
1.20000000000000E+0    0.00000000000000E+0    0.00000000000000E+0
0.00000000000000E+0    0.00000000000000E+0
   BmDistLoadG           8      126       Y       1      1.20000000000000E+0
1.20000000000000E+0    0.00000000000000E+0    0.00000000000000E+0
0.00000000000000E+0    0.00000000000000E+0
   BmDistLoadG           8      127       Y       1      1.20000000000000E+0
1.20000000000000E+0    0.00000000000000E+0    0.00000000000000E+0
0.00000000000000E+0    0.00000000000000E+0
   BmDistLoadG           8      128       Y       1      1.20000000000000E+0
1.20000000000000E+0    0.00000000000000E+0    0.00000000000000E+0
0.00000000000000E+0    0.00000000000000E+0
   BmDistLoadG           8      129       Y       1      1.20000000000000E+0
1.20000000000000E+0    0.00000000000000E+0    0.00000000000000E+0
0.00000000000000E+0    0.00000000000000E+0
```

```
   BmDistLoadG              8      130       Y        1      1.20000000000000E+0
1.20000000000000E+0      0.00000000000000E+0      0.00000000000000E+0
0.00000000000000E+0      0.00000000000000E+0
   BmDistLoadG              8      131       Y        1      1.20000000000000E+0
1.20000000000000E+0      0.00000000000000E+0      0.00000000000000E+0
0.00000000000000E+0      0.00000000000000E+0
   BmDistLoadG              8      132       Y        1      1.20000000000000E+0
1.20000000000000E+0      0.00000000000000E+0      0.00000000000000E+0
0.00000000000000E+0      0.00000000000000E+0
   BmDistLoadG              8      133       Y        1      1.20000000000000E+0
1.20000000000000E+0      0.00000000000000E+0      0.00000000000000E+0
0.00000000000000E+0      0.00000000000000E+0
   BmDistLoadG              8      134       Y        1      1.20000000000000E+0
1.20000000000000E+0      0.00000000000000E+0      0.00000000000000E+0
0.00000000000000E+0      0.00000000000000E+0
   BmDistLoadG              8      135       Y        1      1.20000000000000E+0
1.20000000000000E+0      0.00000000000000E+0      0.00000000000000E+0
0.00000000000000E+0      0.00000000000000E+0
   BmDistLoadG              8      136       Y        1      1.20000000000000E+0
1.20000000000000E+0      0.00000000000000E+0      0.00000000000000E+0
0.00000000000000E+0      0.00000000000000E+0
   BmDistLoadG              8      137       Y        1      1.20000000000000E+0
1.20000000000000E+0      0.00000000000000E+0      0.00000000000000E+0
0.00000000000000E+0      0.00000000000000E+0
   BmDistLoadG              8      138       Y        1      1.20000000000000E+0
1.20000000000000E+0      0.00000000000000E+0      0.00000000000000E+0
0.00000000000000E+0      0.00000000000000E+0
   BmDistLoadG              8      139       Y        1      1.20000000000000E+0
1.20000000000000E+0      0.00000000000000E+0      0.00000000000000E+0
0.00000000000000E+0      0.00000000000000E+0
   BmDistLoadG              8      140       Y        1      1.20000000000000E+0
1.20000000000000E+0      0.00000000000000E+0      0.00000000000000E+0
0.00000000000000E+0      0.00000000000000E+0
   BmDistLoadG              8      141       Y        1      1.20000000000000E+0
1.20000000000000E+0      0.00000000000000E+0      0.00000000000000E+0
0.00000000000000E+0      0.00000000000000E+0
   BmDistLoadG              8      142       Y        1      1.20000000000000E+0
1.20000000000000E+0      0.00000000000000E+0      0.00000000000000E+0
0.00000000000000E+0      0.00000000000000E+0
   BmDistLoadG              8      143       Y        1      1.20000000000000E+0
1.20000000000000E+0      0.00000000000000E+0      0.00000000000000E+0
0.00000000000000E+0      0.00000000000000E+0
   BmDistLoadG              8      144       Y        1      1.20000000000000E+0
1.20000000000000E+0      0.00000000000000E+0      0.00000000000000E+0
0.00000000000000E+0      0.00000000000000E+0
   BmDistLoadG              8      145       Y        1      1.20000000000000E+0
1.20000000000000E+0      0.00000000000000E+0      0.00000000000000E+0
0.00000000000000E+0      0.00000000000000E+0
   BmDistLoadG              8      146       Y        1      1.20000000000000E+0
1.20000000000000E+0      0.00000000000000E+0      0.00000000000000E+0
0.00000000000000E+0      0.00000000000000E+0
   BmDistLoadG              8      147       Y        1      1.20000000000000E+0
1.20000000000000E+0      0.00000000000000E+0      0.00000000000000E+0
0.00000000000000E+0      0.00000000000000E+0
```

```
   BmDistLoadG              8     148       Y       1     1.20000000000000E+0
1.20000000000000E+0      0.00000000000000E+0      0.00000000000000E+0
0.00000000000000E+0      0.00000000000000E+0
   BmDistLoadG              8     149       Y       1     1.20000000000000E+0
1.20000000000000E+0      0.00000000000000E+0      0.00000000000000E+0
0.00000000000000E+0      0.00000000000000E+0
   BmDistLoadG              8     150       Y       1     1.20000000000000E+0
1.20000000000000E+0      0.00000000000000E+0      0.00000000000000E+0
0.00000000000000E+0      0.00000000000000E+0
   BmDistLoadG              8     151       Y       1     1.20000000000000E+0
1.20000000000000E+0      0.00000000000000E+0      0.00000000000000E+0
0.00000000000000E+0      0.00000000000000E+0
   BmDistLoadG              8     152       Y       1     1.20000000000000E+0
1.20000000000000E+0      0.00000000000000E+0      0.00000000000000E+0
0.00000000000000E+0      0.00000000000000E+0
   BmDistLoadG              8     153       Y       1     1.20000000000000E+0
1.20000000000000E+0      0.00000000000000E+0      0.00000000000000E+0
0.00000000000000E+0      0.00000000000000E+0
   BmDistLoadG              8     154       Y       1     1.20000000000000E+0
1.20000000000000E+0      0.00000000000000E+0      0.00000000000000E+0
0.00000000000000E+0      0.00000000000000E+0
   BmDistLoadG              8     155       Y       1     1.20000000000000E+0
1.20000000000000E+0      0.00000000000000E+0      0.00000000000000E+0
0.00000000000000E+0      0.00000000000000E+0
   BmDistLoadG              8     156       Y       1     1.20000000000000E+0
1.20000000000000E+0      0.00000000000000E+0      0.00000000000000E+0
0.00000000000000E+0      0.00000000000000E+0
   BmDistLoadG              8     157       Y       1     1.20000000000000E+0
1.20000000000000E+0      0.00000000000000E+0      0.00000000000000E+0
0.00000000000000E+0      0.00000000000000E+0
   BmDistLoadG              8     158       Y       1     1.20000000000000E+0
1.20000000000000E+0      0.00000000000000E+0      0.00000000000000E+0
0.00000000000000E+0      0.00000000000000E+0
   BmDistLoadG              8     159       Y       1     6.00000000000000E-1
6.00000000000000E-1      0.00000000000000E+0      0.00000000000000E+0
0.00000000000000E+0      0.00000000000000E+0
   BmDistLoadG              8     160       Y       1     6.00000000000000E-1
6.00000000000000E-1      0.00000000000000E+0      0.00000000000000E+0
0.00000000000000E+0      0.00000000000000E+0
   BmDistLoadG              8     161       Y       1     6.00000000000000E-1
6.00000000000000E-1      0.00000000000000E+0      0.00000000000000E+0
0.00000000000000E+0      0.00000000000000E+0
   BmDistLoadG              8     162       Y       1     6.00000000000000E-1
6.00000000000000E-1      0.00000000000000E+0      0.00000000000000E+0
0.00000000000000E+0      0.00000000000000E+0
   BmDistLoadG              8     163       Y       1     6.00000000000000E-1
6.00000000000000E-1      0.00000000000000E+0      0.00000000000000E+0
0.00000000000000E+0      0.00000000000000E+0
   BmDistLoadG              8     164       Z       1     1.32000000000000E+0
1.32000000000000E+0      0.00000000000000E+0      0.00000000000000E+0
0.00000000000000E+0      0.00000000000000E+0
   BmDistLoadG              8     165       Z       1     1.32000000000000E+0
1.32000000000000E+0      0.00000000000000E+0      0.00000000000000E+0
0.00000000000000E+0      0.00000000000000E+0
```

```
   BmDistLoadG              8     166      Z      1     1.32000000000000E+0
1.32000000000000E+0      0.00000000000000E+0      0.00000000000000E+0
0.00000000000000E+0      0.00000000000000E+0
   BmDistLoadG              8     167      Z      1     1.32000000000000E+0
1.32000000000000E+0      0.00000000000000E+0      0.00000000000000E+0
0.00000000000000E+0      0.00000000000000E+0
   BmDistLoadG              8     168      Z      1     1.32000000000000E+0
1.32000000000000E+0      0.00000000000000E+0      0.00000000000000E+0
0.00000000000000E+0      0.00000000000000E+0
   BmDistLoadG              8     169      Z      1     1.32000000000000E+0
1.32000000000000E+0      0.00000000000000E+0      0.00000000000000E+0
0.00000000000000E+0      0.00000000000000E+0
   BmDistLoadG              8     170      Z      1     1.32000000000000E+0
1.32000000000000E+0      0.00000000000000E+0      0.00000000000000E+0
0.00000000000000E+0      0.00000000000000E+0
   BmDistLoadG              8     171      Z      1     1.32000000000000E+0
1.32000000000000E+0      0.00000000000000E+0      0.00000000000000E+0
0.00000000000000E+0      0.00000000000000E+0
   BmDistLoadG              8     172      Z      1     1.32000000000000E+0
1.32000000000000E+0      0.00000000000000E+0      0.00000000000000E+0
0.00000000000000E+0      0.00000000000000E+0
   BmDistLoadG              8     173      Z      1     1.32000000000000E+0
1.32000000000000E+0      0.00000000000000E+0      0.00000000000000E+0
0.00000000000000E+0      0.00000000000000E+0
   BmDistLoadG              8     174      Z      1     1.32000000000000E+0
1.32000000000000E+0      0.00000000000000E+0      0.00000000000000E+0
0.00000000000000E+0      0.00000000000000E+0
   BmDistLoadG              8     175      Z      1     1.32000000000000E+0
1.32000000000000E+0      0.00000000000000E+0      0.00000000000000E+0
0.00000000000000E+0      0.00000000000000E+0
   BmDistLoadG              8     176      Z      1     1.32000000000000E+0
1.32000000000000E+0      0.00000000000000E+0      0.00000000000000E+0
0.00000000000000E+0      0.00000000000000E+0
   BmDistLoadG              8     177      Z      1     1.32000000000000E+0
1.32000000000000E+0      0.00000000000000E+0      0.00000000000000E+0
0.00000000000000E+0      0.00000000000000E+0
   BmDistLoadG              8     178      Z      1     1.32000000000000E+0
1.32000000000000E+0      0.00000000000000E+0      0.00000000000000E+0
0.00000000000000E+0      0.00000000000000E+0
   BmDistLoadG              8     179      Z      1     1.32000000000000E+0
1.32000000000000E+0      0.00000000000000E+0      0.00000000000000E+0
0.00000000000000E+0      0.00000000000000E+0
   BmDistLoadG              8     180      Z      1     1.32000000000000E+0
1.32000000000000E+0      0.00000000000000E+0      0.00000000000000E+0
0.00000000000000E+0      0.00000000000000E+0
   BmDistLoadG              8     181      Z      1     1.32000000000000E+0
1.32000000000000E+0      0.00000000000000E+0      0.00000000000000E+0
0.00000000000000E+0      0.00000000000000E+0
   BmDistLoadG              8     182      Z      1     1.32000000000000E+0
1.32000000000000E+0      0.00000000000000E+0      0.00000000000000E+0
0.00000000000000E+0      0.00000000000000E+0
   BmDistLoadG              8     183      Z      1     1.32000000000000E+0
1.32000000000000E+0      0.00000000000000E+0      0.00000000000000E+0
0.00000000000000E+0      0.00000000000000E+0
```

```
   BmDistLoadG              8      184       Z        1      1.32000000000000E+0
1.32000000000000E+0       0.00000000000000E+0       0.00000000000000E+0
0.00000000000000E+0       0.00000000000000E+0
   BmDistLoadG              8      185       Z        1      1.32000000000000E+0
1.32000000000000E+0       0.00000000000000E+0       0.00000000000000E+0
0.00000000000000E+0       0.00000000000000E+0
   BmDistLoadG              8      186       Z        1      1.32000000000000E+0
1.32000000000000E+0       0.00000000000000E+0       0.00000000000000E+0
0.00000000000000E+0       0.00000000000000E+0
   BmDistLoadG              8      187       Z        1      1.32000000000000E+0
1.32000000000000E+0       0.00000000000000E+0       0.00000000000000E+0
0.00000000000000E+0       0.00000000000000E+0
   BmDistLoadG              8      188       Z        1      1.32000000000000E+0
1.32000000000000E+0       0.00000000000000E+0       0.00000000000000E+0
0.00000000000000E+0       0.00000000000000E+0
   BmDistLoadG              8      189       Z        1      1.32000000000000E+0
1.32000000000000E+0       0.00000000000000E+0       0.00000000000000E+0
0.00000000000000E+0       0.00000000000000E+0
   BmDistLoadG              8      190       Z        1      1.32000000000000E+0
1.32000000000000E+0       0.00000000000000E+0       0.00000000000000E+0
0.00000000000000E+0       0.00000000000000E+0
   BmDistLoadG              8      191       Z        1      1.32000000000000E+0
1.32000000000000E+0       0.00000000000000E+0       0.00000000000000E+0
0.00000000000000E+0       0.00000000000000E+0
   BmDistLoadG              8      192       Z        1      1.32000000000000E+0
1.32000000000000E+0       0.00000000000000E+0       0.00000000000000E+0
0.00000000000000E+0       0.00000000000000E+0
   BmDistLoadG              8      193       Z        1      1.32000000000000E+0
1.32000000000000E+0       0.00000000000000E+0       0.00000000000000E+0
0.00000000000000E+0       0.00000000000000E+0
   BmDistLoadG              8      194       Z        1      1.32000000000000E+0
1.32000000000000E+0       0.00000000000000E+0       0.00000000000000E+0
0.00000000000000E+0       0.00000000000000E+0
   BmDistLoadG              8      195       Z        1      1.32000000000000E+0
1.32000000000000E+0       0.00000000000000E+0       0.00000000000000E+0
0.00000000000000E+0       0.00000000000000E+0
   BmDistLoadG              8      196       Z        1      1.32000000000000E+0
1.32000000000000E+0       0.00000000000000E+0       0.00000000000000E+0
0.00000000000000E+0       0.00000000000000E+0
   BmDistLoadG              8      197       Z        1      1.32000000000000E+0
1.32000000000000E+0       0.00000000000000E+0       0.00000000000000E+0
0.00000000000000E+0       0.00000000000000E+0
   BmDistLoadG              8      198       Z        1      1.32000000000000E+0
1.32000000000000E+0       0.00000000000000E+0       0.00000000000000E+0
0.00000000000000E+0       0.00000000000000E+0
   BmDistLoadG              8      199       Z        1      1.32000000000000E+0
1.32000000000000E+0       0.00000000000000E+0       0.00000000000000E+0
0.00000000000000E+0       0.00000000000000E+0
   BmDistLoadG              8      200       Z        1      1.32000000000000E+0
1.32000000000000E+0       0.00000000000000E+0       0.00000000000000E+0
0.00000000000000E+0       0.00000000000000E+0
   BmDistLoadG              8      201       Z        1      1.32000000000000E+0
1.32000000000000E+0       0.00000000000000E+0       0.00000000000000E+0
0.00000000000000E+0       0.00000000000000E+0
```

```
   BmDistLoadG              8     202      Z      1     1.32000000000000E+0
1.32000000000000E+0      0.00000000000000E+0      0.00000000000000E+0
0.00000000000000E+0      0.00000000000000E+0
   BmDistLoadG              8     203      Z      1     1.32000000000000E+0
1.32000000000000E+0      0.00000000000000E+0      0.00000000000000E+0
0.00000000000000E+0      0.00000000000000E+0
   BmDistLoadG              8     204      Z      1     1.32000000000000E+0
1.32000000000000E+0      0.00000000000000E+0      0.00000000000000E+0
0.00000000000000E+0      0.00000000000000E+0
   BmDistLoadG              8     205      Z      1     1.32000000000000E+0
1.32000000000000E+0      0.00000000000000E+0      0.00000000000000E+0
0.00000000000000E+0      0.00000000000000E+0
   BmDistLoadG              8     206      Z      1     1.32000000000000E+0
1.32000000000000E+0      0.00000000000000E+0      0.00000000000000E+0
0.00000000000000E+0      0.00000000000000E+0
   BmDistLoadG              8     207      Z      1     1.32000000000000E+0
1.32000000000000E+0      0.00000000000000E+0      0.00000000000000E+0
0.00000000000000E+0      0.00000000000000E+0
   BmDistLoadG              8     208      Z      1     1.32000000000000E+0
1.32000000000000E+0      0.00000000000000E+0      0.00000000000000E+0
0.00000000000000E+0      0.00000000000000E+0
   BmDistLoadG              8     209      Z      1     1.32000000000000E+0
1.32000000000000E+0      0.00000000000000E+0      0.00000000000000E+0
0.00000000000000E+0      0.00000000000000E+0
   BmDistLoadG              8     210      Z      1     1.32000000000000E+0
1.32000000000000E+0      0.00000000000000E+0      0.00000000000000E+0
0.00000000000000E+0      0.00000000000000E+0
   BmDistLoadG              8     211      Z      1     1.32000000000000E+0
1.32000000000000E+0      0.00000000000000E+0      0.00000000000000E+0
0.00000000000000E+0      0.00000000000000E+0
   BmDistLoadG              8     212      Z      1     1.32000000000000E+0
1.32000000000000E+0      0.00000000000000E+0      0.00000000000000E+0
0.00000000000000E+0      0.00000000000000E+0
   BmDistLoadG              8     213      Z      1     1.32000000000000E+0
1.32000000000000E+0      0.00000000000000E+0      0.00000000000000E+0
0.00000000000000E+0      0.00000000000000E+0
   BmDistLoadG              8     214      Z      1     1.32000000000000E+0
1.32000000000000E+0      0.00000000000000E+0      0.00000000000000E+0
0.00000000000000E+0      0.00000000000000E+0
   BmDistLoadG              8     215      Z      1     1.32000000000000E+0
1.32000000000000E+0      0.00000000000000E+0      0.00000000000000E+0
0.00000000000000E+0      0.00000000000000E+0
   BmDistLoadG              8     216      Z      1     1.32000000000000E+0
1.32000000000000E+0      0.00000000000000E+0      0.00000000000000E+0
0.00000000000000E+0      0.00000000000000E+0
   BmDistLoadG              8     217      Z      1     1.32000000000000E+0
1.32000000000000E+0      0.00000000000000E+0      0.00000000000000E+0
0.00000000000000E+0      0.00000000000000E+0
   BmDistLoadG              8     218      Z      1     2.64000000000000E+0
2.64000000000000E+0      0.00000000000000E+0      0.00000000000000E+0
0.00000000000000E+0      0.00000000000000E+0
   BmDistLoadG              8     219      Z      1     2.64000000000000E+0
2.64000000000000E+0      0.00000000000000E+0      0.00000000000000E+0
0.00000000000000E+0      0.00000000000000E+0
```

```
   BmDistLoadG              8     220      Z      1     2.64000000000000E+0
2.64000000000000E+0      0.00000000000000E+0      0.00000000000000E+0
0.00000000000000E+0      0.00000000000000E+0
   BmDistLoadG              8     221      Z      1     2.64000000000000E+0
2.64000000000000E+0      0.00000000000000E+0      0.00000000000000E+0
0.00000000000000E+0      0.00000000000000E+0
   BmDistLoadG              8     222      Z      1     2.64000000000000E+0
2.64000000000000E+0      0.00000000000000E+0      0.00000000000000E+0
0.00000000000000E+0      0.00000000000000E+0
   BmDistLoadG              8     223      Z      1     2.64000000000000E+0
2.64000000000000E+0      0.00000000000000E+0      0.00000000000000E+0
0.00000000000000E+0      0.00000000000000E+0
   BmDistLoadG              8     224      Z      1     2.64000000000000E+0
2.64000000000000E+0      0.00000000000000E+0      0.00000000000000E+0
0.00000000000000E+0      0.00000000000000E+0
   BmDistLoadG              8     225      Z      1     2.64000000000000E+0
2.64000000000000E+0      0.00000000000000E+0      0.00000000000000E+0
0.00000000000000E+0      0.00000000000000E+0
   BmDistLoadG              8     226      Z      1     2.64000000000000E+0
2.64000000000000E+0      0.00000000000000E+0      0.00000000000000E+0
0.00000000000000E+0      0.00000000000000E+0
   BmDistLoadG              8     227      Z      1     2.64000000000000E+0
2.64000000000000E+0      0.00000000000000E+0      0.00000000000000E+0
0.00000000000000E+0      0.00000000000000E+0
   BmDistLoadG              8     228      Z      1     2.64000000000000E+0
2.64000000000000E+0      0.00000000000000E+0      0.00000000000000E+0
0.00000000000000E+0      0.00000000000000E+0
   BmDistLoadG              8     229      Z      1     2.64000000000000E+0
2.64000000000000E+0      0.00000000000000E+0      0.00000000000000E+0
0.00000000000000E+0      0.00000000000000E+0
   BmDistLoadG              8     230      Z      1     2.64000000000000E+0
2.64000000000000E+0      0.00000000000000E+0      0.00000000000000E+0
0.00000000000000E+0      0.00000000000000E+0
   BmDistLoadG              8     231      Z      1     2.64000000000000E+0
2.64000000000000E+0      0.00000000000000E+0      0.00000000000000E+0
0.00000000000000E+0      0.00000000000000E+0
   BmDistLoadG              8     232      Z      1     2.64000000000000E+0
2.64000000000000E+0      0.00000000000000E+0      0.00000000000000E+0
0.00000000000000E+0      0.00000000000000E+0
   BmDistLoadG              8     233      Z      1     2.64000000000000E+0
2.64000000000000E+0      0.00000000000000E+0      0.00000000000000E+0
0.00000000000000E+0      0.00000000000000E+0
   BmDistLoadG              8     234      Z      1     2.64000000000000E+0
2.64000000000000E+0      0.00000000000000E+0      0.00000000000000E+0
0.00000000000000E+0      0.00000000000000E+0
   BmDistLoadG              8     235      Z      1     2.64000000000000E+0
2.64000000000000E+0      0.00000000000000E+0      0.00000000000000E+0
0.00000000000000E+0      0.00000000000000E+0
   BmDistLoadG              8     236      Z      1     2.64000000000000E+0
2.64000000000000E+0      0.00000000000000E+0      0.00000000000000E+0
0.00000000000000E+0      0.00000000000000E+0
   BmDistLoadG              8     237      Z      1     2.64000000000000E+0
2.64000000000000E+0      0.00000000000000E+0      0.00000000000000E+0
0.00000000000000E+0      0.00000000000000E+0
```

```
   BmDistLoadG              8     238      Z      1     2.64000000000000E+0
2.64000000000000E+0      0.00000000000000E+0      0.00000000000000E+0
0.00000000000000E+0      0.00000000000000E+0
   BmDistLoadG              8     239      Z      1     2.64000000000000E+0
2.64000000000000E+0      0.00000000000000E+0      0.00000000000000E+0
0.00000000000000E+0      0.00000000000000E+0
   BmDistLoadG              8     240      Z      1     2.64000000000000E+0
2.64000000000000E+0      0.00000000000000E+0      0.00000000000000E+0
0.00000000000000E+0      0.00000000000000E+0
   BmDistLoadG              8     241      Z      1     2.64000000000000E+0
2.64000000000000E+0      0.00000000000000E+0      0.00000000000000E+0
0.00000000000000E+0      0.00000000000000E+0
   BmDistLoadG              8     242      Z      1     2.64000000000000E+0
2.64000000000000E+0      0.00000000000000E+0      0.00000000000000E+0
0.00000000000000E+0      0.00000000000000E+0
   BmDistLoadG              8     243      Z      1     2.64000000000000E+0
2.64000000000000E+0      0.00000000000000E+0      0.00000000000000E+0
0.00000000000000E+0      0.00000000000000E+0
   BmDistLoadG              8     244      Z      1     2.64000000000000E+0
2.64000000000000E+0      0.00000000000000E+0      0.00000000000000E+0
0.00000000000000E+0      0.00000000000000E+0
   BmDistLoadG              8     245      Z      1     2.64000000000000E+0
2.64000000000000E+0      0.00000000000000E+0      0.00000000000000E+0
0.00000000000000E+0      0.00000000000000E+0
   BmDistLoadG              8     246      Z      1     2.64000000000000E+0
2.64000000000000E+0      0.00000000000000E+0      0.00000000000000E+0
0.00000000000000E+0      0.00000000000000E+0
   BmDistLoadG              8     247      Z      1     2.64000000000000E+0
2.64000000000000E+0      0.00000000000000E+0      0.00000000000000E+0
0.00000000000000E+0      0.00000000000000E+0
   BmDistLoadG              8     248      Z      1     2.64000000000000E+0
2.64000000000000E+0      0.00000000000000E+0      0.00000000000000E+0
0.00000000000000E+0      0.00000000000000E+0
   BmDistLoadG              8     249      Z      1     2.64000000000000E+0
2.64000000000000E+0      0.00000000000000E+0      0.00000000000000E+0
0.00000000000000E+0      0.00000000000000E+0
   BmDistLoadG              8     250      Z      1     2.64000000000000E+0
2.64000000000000E+0      0.00000000000000E+0      0.00000000000000E+0
0.00000000000000E+0      0.00000000000000E+0
   BmDistLoadG              8     251      Z      1     2.64000000000000E+0
2.64000000000000E+0      0.00000000000000E+0      0.00000000000000E+0
0.00000000000000E+0      0.00000000000000E+0
   BmDistLoadG              8     252      Z      1     2.64000000000000E+0
2.64000000000000E+0      0.00000000000000E+0      0.00000000000000E+0
0.00000000000000E+0      0.00000000000000E+0
   BmDistLoadG              8     253      Z      1     2.64000000000000E+0
2.64000000000000E+0      0.00000000000000E+0      0.00000000000000E+0
0.00000000000000E+0      0.00000000000000E+0
   BmDistLoadG              8     254      Z      1     2.64000000000000E+0
2.64000000000000E+0      0.00000000000000E+0      0.00000000000000E+0
0.00000000000000E+0      0.00000000000000E+0
   BmDistLoadG              8     255      Z      1     2.64000000000000E+0
2.64000000000000E+0      0.00000000000000E+0      0.00000000000000E+0
0.00000000000000E+0      0.00000000000000E+0
```

```
   BmDistLoadG            8      256       Z        1      2.64000000000000E+0
2.64000000000000E+0    0.00000000000000E+0    0.00000000000000E+0
0.00000000000000E+0    0.00000000000000E+0
   BmDistLoadG            8      257       Z        1      2.64000000000000E+0
2.64000000000000E+0    0.00000000000000E+0    0.00000000000000E+0
0.00000000000000E+0    0.00000000000000E+0
   BmDistLoadG            8      258       Z        1      2.64000000000000E+0
2.64000000000000E+0    0.00000000000000E+0    0.00000000000000E+0
0.00000000000000E+0    0.00000000000000E+0
   BmDistLoadG            8      259       Z        1      2.64000000000000E+0
2.64000000000000E+0    0.00000000000000E+0    0.00000000000000E+0
0.00000000000000E+0    0.00000000000000E+0
   BmDistLoadG            8      260       Z        1      2.64000000000000E+0
2.64000000000000E+0    0.00000000000000E+0    0.00000000000000E+0
0.00000000000000E+0    0.00000000000000E+0
   BmDistLoadG            8      261       Z        1      2.64000000000000E+0
2.64000000000000E+0    0.00000000000000E+0    0.00000000000000E+0
0.00000000000000E+0    0.00000000000000E+0
   BmDistLoadG            8      262       Z        1      2.64000000000000E+0
2.64000000000000E+0    0.00000000000000E+0    0.00000000000000E+0
0.00000000000000E+0    0.00000000000000E+0
   BmDistLoadG            8      263       Z        1      2.64000000000000E+0
2.64000000000000E+0    0.00000000000000E+0    0.00000000000000E+0
0.00000000000000E+0    0.00000000000000E+0
   BmDistLoadG            8      264       Z        1      2.64000000000000E+0
2.64000000000000E+0    0.00000000000000E+0    0.00000000000000E+0
0.00000000000000E+0    0.00000000000000E+0
   BmDistLoadG            8      265       Z        1      2.64000000000000E+0
2.64000000000000E+0    0.00000000000000E+0    0.00000000000000E+0
0.00000000000000E+0    0.00000000000000E+0
   BmDistLoadG            8      266       Z        1      2.64000000000000E+0
2.64000000000000E+0    0.00000000000000E+0    0.00000000000000E+0
0.00000000000000E+0    0.00000000000000E+0
   BmDistLoadG            8      267       Z        1      2.64000000000000E+0
2.64000000000000E+0    0.00000000000000E+0    0.00000000000000E+0
0.00000000000000E+0    0.00000000000000E+0
   BmDistLoadG            8      268       Z        1      2.64000000000000E+0
2.64000000000000E+0    0.00000000000000E+0    0.00000000000000E+0
0.00000000000000E+0    0.00000000000000E+0
   BmDistLoadG            8      269       Z        1      2.64000000000000E+0
2.64000000000000E+0    0.00000000000000E+0    0.00000000000000E+0
0.00000000000000E+0    0.00000000000000E+0
   BmDistLoadG            8      270       Z        1      2.64000000000000E+0
2.64000000000000E+0    0.00000000000000E+0    0.00000000000000E+0
0.00000000000000E+0    0.00000000000000E+0
   BmDistLoadG            8      271       Z        1      2.64000000000000E+0
2.64000000000000E+0    0.00000000000000E+0    0.00000000000000E+0
0.00000000000000E+0    0.00000000000000E+0
   BmDistLoadG            8      272       Z        1      2.64000000000000E+0
2.64000000000000E+0    0.00000000000000E+0    0.00000000000000E+0
0.00000000000000E+0    0.00000000000000E+0
   BmDistLoadG            8      273       Z        1      2.64000000000000E+0
2.64000000000000E+0    0.00000000000000E+0    0.00000000000000E+0
0.00000000000000E+0    0.00000000000000E+0
```

```
   BmDistLoadG              8     274       Z        1     2.64000000000000E+0
2.64000000000000E+0     0.00000000000000E+0     0.00000000000000E+0
0.00000000000000E+0     0.00000000000000E+0
   BmDistLoadG              8     275       Z        1     2.64000000000000E+0
2.64000000000000E+0     0.00000000000000E+0     0.00000000000000E+0
0.00000000000000E+0     0.00000000000000E+0
   BmDistLoadG              8     276       Z        1     2.64000000000000E+0
2.64000000000000E+0     0.00000000000000E+0     0.00000000000000E+0
0.00000000000000E+0     0.00000000000000E+0
   BmDistLoadG              8     277       Z        1     2.64000000000000E+0
2.64000000000000E+0     0.00000000000000E+0     0.00000000000000E+0
0.00000000000000E+0     0.00000000000000E+0
   BmDistLoadG              8     278       Z        1     2.64000000000000E+0
2.64000000000000E+0     0.00000000000000E+0     0.00000000000000E+0
0.00000000000000E+0     0.00000000000000E+0
   BmDistLoadG              8     279       Z        1     2.64000000000000E+0
2.64000000000000E+0     0.00000000000000E+0     0.00000000000000E+0
0.00000000000000E+0     0.00000000000000E+0
   BmDistLoadG              8     280       Z        1     2.64000000000000E+0
2.64000000000000E+0     0.00000000000000E+0     0.00000000000000E+0
0.00000000000000E+0     0.00000000000000E+0
   BmDistLoadG              8     281       Z        1     2.64000000000000E+0
2.64000000000000E+0     0.00000000000000E+0     0.00000000000000E+0
0.00000000000000E+0     0.00000000000000E+0
   BmDistLoadG              8     282       Z        1     2.64000000000000E+0
2.64000000000000E+0     0.00000000000000E+0     0.00000000000000E+0
0.00000000000000E+0     0.00000000000000E+0
   BmDistLoadG              8     283       Z        1     2.64000000000000E+0
2.64000000000000E+0     0.00000000000000E+0     0.00000000000000E+0
0.00000000000000E+0     0.00000000000000E+0
   BmDistLoadG              8     284       Z        1     2.64000000000000E+0
2.64000000000000E+0     0.00000000000000E+0     0.00000000000000E+0
0.00000000000000E+0     0.00000000000000E+0
   BmDistLoadG              8     285       Z        1     2.64000000000000E+0
2.64000000000000E+0     0.00000000000000E+0     0.00000000000000E+0
0.00000000000000E+0     0.00000000000000E+0
   BmDistLoadG              8     286       Z        1     2.64000000000000E+0
2.64000000000000E+0     0.00000000000000E+0     0.00000000000000E+0
0.00000000000000E+0     0.00000000000000E+0
   BmDistLoadG              8     287       Z        1     2.64000000000000E+0
2.64000000000000E+0     0.00000000000000E+0     0.00000000000000E+0
0.00000000000000E+0     0.00000000000000E+0
   BmDistLoadG              8     288       Z        1     2.64000000000000E+0
2.64000000000000E+0     0.00000000000000E+0     0.00000000000000E+0
0.00000000000000E+0     0.00000000000000E+0
   BmDistLoadG              8     289       Z        1     2.64000000000000E+0
2.64000000000000E+0     0.00000000000000E+0     0.00000000000000E+0
0.00000000000000E+0     0.00000000000000E+0
   BmDistLoadG              8     290       Z        1     2.64000000000000E+0
2.64000000000000E+0     0.00000000000000E+0     0.00000000000000E+0
0.00000000000000E+0     0.00000000000000E+0
   BmDistLoadG              8     291       Z        1     2.64000000000000E+0
2.64000000000000E+0     0.00000000000000E+0     0.00000000000000E+0
0.00000000000000E+0     0.00000000000000E+0
```

```
   BmDistLoadG              8     292      Z      1     2.64000000000000E+0
2.64000000000000E+0      0.00000000000000E+0      0.00000000000000E+0
0.00000000000000E+0      0.00000000000000E+0
   BmDistLoadG              8     293      Z      1     2.64000000000000E+0
2.64000000000000E+0      0.00000000000000E+0      0.00000000000000E+0
0.00000000000000E+0      0.00000000000000E+0
   BmDistLoadG              8     294      Z      1     2.64000000000000E+0
2.64000000000000E+0      0.00000000000000E+0      0.00000000000000E+0
0.00000000000000E+0      0.00000000000000E+0
   BmDistLoadG              8     295      Z      1     2.64000000000000E+0
2.64000000000000E+0      0.00000000000000E+0      0.00000000000000E+0
0.00000000000000E+0      0.00000000000000E+0
   BmDistLoadG              8     296      Z      1     2.64000000000000E+0
2.64000000000000E+0      0.00000000000000E+0      0.00000000000000E+0
0.00000000000000E+0      0.00000000000000E+0
   BmDistLoadG              8     297      Z      1     2.64000000000000E+0
2.64000000000000E+0      0.00000000000000E+0      0.00000000000000E+0
0.00000000000000E+0      0.00000000000000E+0
   BmDistLoadG              8     298      Z      1     2.64000000000000E+0
2.64000000000000E+0      0.00000000000000E+0      0.00000000000000E+0
0.00000000000000E+0      0.00000000000000E+0
   BmDistLoadG              8     299      Z      1     2.64000000000000E+0
2.64000000000000E+0      0.00000000000000E+0      0.00000000000000E+0
0.00000000000000E+0      0.00000000000000E+0
   BmDistLoadG              8     300      Z      1     2.64000000000000E+0
2.64000000000000E+0      0.00000000000000E+0      0.00000000000000E+0
0.00000000000000E+0      0.00000000000000E+0
   BmDistLoadG              8     301      Z      1     2.64000000000000E+0
2.64000000000000E+0      0.00000000000000E+0      0.00000000000000E+0
0.00000000000000E+0      0.00000000000000E+0
   BmDistLoadG              8     302      Z      1     2.64000000000000E+0
2.64000000000000E+0      0.00000000000000E+0      0.00000000000000E+0
0.00000000000000E+0      0.00000000000000E+0
   BmDistLoadG              8     303      Z      1     2.64000000000000E+0
2.64000000000000E+0      0.00000000000000E+0      0.00000000000000E+0
0.00000000000000E+0      0.00000000000000E+0
   BmDistLoadG              8     304      Z      1     2.64000000000000E+0
2.64000000000000E+0      0.00000000000000E+0      0.00000000000000E+0
0.00000000000000E+0      0.00000000000000E+0
   BmDistLoadG              8     305      Z      1     2.64000000000000E+0
2.64000000000000E+0      0.00000000000000E+0      0.00000000000000E+0
0.00000000000000E+0      0.00000000000000E+0
   BmDistLoadG              8     306      Z      1     2.64000000000000E+0
2.64000000000000E+0      0.00000000000000E+0      0.00000000000000E+0
0.00000000000000E+0      0.00000000000000E+0
   BmDistLoadG              8     307      Z      1     2.64000000000000E+0
2.64000000000000E+0      0.00000000000000E+0      0.00000000000000E+0
0.00000000000000E+0      0.00000000000000E+0
   BmDistLoadG              8     308      Z      1     2.64000000000000E+0
2.64000000000000E+0      0.00000000000000E+0      0.00000000000000E+0
0.00000000000000E+0      0.00000000000000E+0
   BmDistLoadG              8     309      Z      1     2.64000000000000E+0
2.64000000000000E+0      0.00000000000000E+0      0.00000000000000E+0
0.00000000000000E+0      0.00000000000000E+0
```

```
   BmDistLoadG              8      310        Z        1      2.64000000000000E+0
2.64000000000000E+0      0.00000000000000E+0      0.00000000000000E+0
0.00000000000000E+0      0.00000000000000E+0
   BmDistLoadG              8      311        Z        1      2.64000000000000E+0
2.64000000000000E+0      0.00000000000000E+0      0.00000000000000E+0
0.00000000000000E+0      0.00000000000000E+0
   BmDistLoadG              8      312        Z        1      2.64000000000000E+0
2.64000000000000E+0      0.00000000000000E+0      0.00000000000000E+0
0.00000000000000E+0      0.00000000000000E+0
   BmDistLoadG              8      313        Z        1      2.64000000000000E+0
2.64000000000000E+0      0.00000000000000E+0      0.00000000000000E+0
0.00000000000000E+0      0.00000000000000E+0
   BmDistLoadG              8      314        Z        1      2.64000000000000E+0
2.64000000000000E+0      0.00000000000000E+0      0.00000000000000E+0
0.00000000000000E+0      0.00000000000000E+0
   BmDistLoadG              8      315        Z        1      2.64000000000000E+0
2.64000000000000E+0      0.00000000000000E+0      0.00000000000000E+0
0.00000000000000E+0      0.00000000000000E+0
   BmDistLoadG              8      316        Z        1      2.64000000000000E+0
2.64000000000000E+0      0.00000000000000E+0      0.00000000000000E+0
0.00000000000000E+0      0.00000000000000E+0
   BmDistLoadG              8      317        Z        1      2.64000000000000E+0
2.64000000000000E+0      0.00000000000000E+0      0.00000000000000E+0
0.00000000000000E+0      0.00000000000000E+0
   BmDistLoadG              8      318        Z        1      2.64000000000000E+0
2.64000000000000E+0      0.00000000000000E+0      0.00000000000000E+0
0.00000000000000E+0      0.00000000000000E+0
   BmDistLoadG              8      319        Z        1      2.64000000000000E+0
2.64000000000000E+0      0.00000000000000E+0      0.00000000000000E+0
0.00000000000000E+0      0.00000000000000E+0
   BmDistLoadG              8      320        Z        1      2.64000000000000E+0
2.64000000000000E+0      0.00000000000000E+0      0.00000000000000E+0
0.00000000000000E+0      0.00000000000000E+0
   BmDistLoadG              8      321        Z        1      2.64000000000000E+0
2.64000000000000E+0      0.00000000000000E+0      0.00000000000000E+0
0.00000000000000E+0      0.00000000000000E+0
   BmDistLoadG              8      322        Z        1      2.64000000000000E+0
2.64000000000000E+0      0.00000000000000E+0      0.00000000000000E+0
0.00000000000000E+0      0.00000000000000E+0
   BmDistLoadG              8      323        Z        1      2.64000000000000E+0
2.64000000000000E+0      0.00000000000000E+0      0.00000000000000E+0
0.00000000000000E+0      0.00000000000000E+0
   BmDistLoadG              8      324        Z        1      2.64000000000000E+0
2.64000000000000E+0      0.00000000000000E+0      0.00000000000000E+0
0.00000000000000E+0      0.00000000000000E+0
   BmDistLoadG              8      325        Z        1      2.64000000000000E+0
2.64000000000000E+0      0.00000000000000E+0      0.00000000000000E+0
0.00000000000000E+0      0.00000000000000E+0
   BmDistLoadG              8      326        Z        1      2.64000000000000E+0
2.64000000000000E+0      0.00000000000000E+0      0.00000000000000E+0
0.00000000000000E+0      0.00000000000000E+0
   BmDistLoadG              8      327        Z        1      2.64000000000000E+0
2.64000000000000E+0      0.00000000000000E+0      0.00000000000000E+0
0.00000000000000E+0      0.00000000000000E+0
```

```
   BmDistLoadG            8     328      Z       1     2.64000000000000E+0
2.64000000000000E+0     0.00000000000000E+0     0.00000000000000E+0
0.00000000000000E+0     0.00000000000000E+0
   BmDistLoadG            8     329      Z       1     2.64000000000000E+0
2.64000000000000E+0     0.00000000000000E+0     0.00000000000000E+0
0.00000000000000E+0     0.00000000000000E+0
   BmDistLoadG            8     330      Z       1     2.64000000000000E+0
2.64000000000000E+0     0.00000000000000E+0     0.00000000000000E+0
0.00000000000000E+0     0.00000000000000E+0
   BmDistLoadG            8     331      Z       1     2.64000000000000E+0
2.64000000000000E+0     0.00000000000000E+0     0.00000000000000E+0
0.00000000000000E+0     0.00000000000000E+0
   BmDistLoadG            8     332      Z       1     2.64000000000000E+0
2.64000000000000E+0     0.00000000000000E+0     0.00000000000000E+0
0.00000000000000E+0     0.00000000000000E+0
   BmDistLoadG            8     333      Z       1     2.64000000000000E+0
2.64000000000000E+0     0.00000000000000E+0     0.00000000000000E+0
0.00000000000000E+0     0.00000000000000E+0
   BmDistLoadG            8     334      Z       1     2.64000000000000E+0
2.64000000000000E+0     0.00000000000000E+0     0.00000000000000E+0
0.00000000000000E+0     0.00000000000000E+0
   BmDistLoadG            8     335      Z       1     2.64000000000000E+0
2.64000000000000E+0     0.00000000000000E+0     0.00000000000000E+0
0.00000000000000E+0     0.00000000000000E+0
   BmDistLoadG            8     336      Z       1     2.64000000000000E+0
2.64000000000000E+0     0.00000000000000E+0     0.00000000000000E+0
0.00000000000000E+0     0.00000000000000E+0
   BmDistLoadG            8     337      Z       1     2.64000000000000E+0
2.64000000000000E+0     0.00000000000000E+0     0.00000000000000E+0
0.00000000000000E+0     0.00000000000000E+0
   BmDistLoadG            8     338      Z       1     2.64000000000000E+0
2.64000000000000E+0     0.00000000000000E+0     0.00000000000000E+0
0.00000000000000E+0     0.00000000000000E+0
   BmDistLoadG            8     339      Z       1     2.64000000000000E+0
2.64000000000000E+0     0.00000000000000E+0     0.00000000000000E+0
0.00000000000000E+0     0.00000000000000E+0
   BmDistLoadG            8     340      Z       1     2.64000000000000E+0
2.64000000000000E+0     0.00000000000000E+0     0.00000000000000E+0
0.00000000000000E+0     0.00000000000000E+0
   BmDistLoadG            8     341      Z       1     2.64000000000000E+0
2.64000000000000E+0     0.00000000000000E+0     0.00000000000000E+0
0.00000000000000E+0     0.00000000000000E+0
   BmDistLoadG            8     342      Z       1     2.64000000000000E+0
2.64000000000000E+0     0.00000000000000E+0     0.00000000000000E+0
0.00000000000000E+0     0.00000000000000E+0
   BmDistLoadG            8     343      Z       1     2.64000000000000E+0
2.64000000000000E+0     0.00000000000000E+0     0.00000000000000E+0
0.00000000000000E+0     0.00000000000000E+0
   BmDistLoadG            8     344      Z       1     2.64000000000000E+0
2.64000000000000E+0     0.00000000000000E+0     0.00000000000000E+0
0.00000000000000E+0     0.00000000000000E+0
   BmDistLoadG            8     345      Z       1     2.64000000000000E+0
2.64000000000000E+0     0.00000000000000E+0     0.00000000000000E+0
0.00000000000000E+0     0.00000000000000E+0
```

```
   BmDistLoadG            8     346       Z        1     2.64000000000000E+0
2.64000000000000E+0     0.00000000000000E+0     0.00000000000000E+0
0.00000000000000E+0     0.00000000000000E+0
   BmDistLoadG            8     347       Z        1     2.64000000000000E+0
2.64000000000000E+0     0.00000000000000E+0     0.00000000000000E+0
0.00000000000000E+0     0.00000000000000E+0
   BmDistLoadG            8     348       Z        1     2.64000000000000E+0
2.64000000000000E+0     0.00000000000000E+0     0.00000000000000E+0
0.00000000000000E+0     0.00000000000000E+0
   BmDistLoadG            8     349       Z        1     2.64000000000000E+0
2.64000000000000E+0     0.00000000000000E+0     0.00000000000000E+0
0.00000000000000E+0     0.00000000000000E+0
   BmDistLoadG            8     350       Z        1     2.64000000000000E+0
2.64000000000000E+0     0.00000000000000E+0     0.00000000000000E+0
0.00000000000000E+0     0.00000000000000E+0
   BmDistLoadG            8     351       Z        1     2.64000000000000E+0
2.64000000000000E+0     0.00000000000000E+0     0.00000000000000E+0
0.00000000000000E+0     0.00000000000000E+0
   BmDistLoadG            8     352       Z        1     2.64000000000000E+0
2.64000000000000E+0     0.00000000000000E+0     0.00000000000000E+0
0.00000000000000E+0     0.00000000000000E+0
   BmDistLoadG            8     353       Z        1     2.64000000000000E+0
2.64000000000000E+0     0.00000000000000E+0     0.00000000000000E+0
0.00000000000000E+0     0.00000000000000E+0
   BmDistLoadG            8     354       Z        1     2.64000000000000E+0
2.64000000000000E+0     0.00000000000000E+0     0.00000000000000E+0
0.00000000000000E+0     0.00000000000000E+0
   BmDistLoadG            8     355       Z        1     2.64000000000000E+0
2.64000000000000E+0     0.00000000000000E+0     0.00000000000000E+0
0.00000000000000E+0     0.00000000000000E+0
   BmDistLoadG            8     356       Z        1     2.64000000000000E+0
2.64000000000000E+0     0.00000000000000E+0     0.00000000000000E+0
0.00000000000000E+0     0.00000000000000E+0
   BmDistLoadG            8     357       Z        1     2.64000000000000E+0
2.64000000000000E+0     0.00000000000000E+0     0.00000000000000E+0
0.00000000000000E+0     0.00000000000000E+0
   BmDistLoadG            8     358       Z        1     2.64000000000000E+0
2.64000000000000E+0     0.00000000000000E+0     0.00000000000000E+0
0.00000000000000E+0     0.00000000000000E+0
   BmDistLoadG            8     359       Z        1     2.64000000000000E+0
2.64000000000000E+0     0.00000000000000E+0     0.00000000000000E+0
0.00000000000000E+0     0.00000000000000E+0
   BmDistLoadG            8     360       Z        1     2.64000000000000E+0
2.64000000000000E+0     0.00000000000000E+0     0.00000000000000E+0
0.00000000000000E+0     0.00000000000000E+0
   BmDistLoadG            8     361       Z        1     2.64000000000000E+0
2.64000000000000E+0     0.00000000000000E+0     0.00000000000000E+0
0.00000000000000E+0     0.00000000000000E+0
   BmDistLoadG            8     362       Z        1     2.64000000000000E+0
2.64000000000000E+0     0.00000000000000E+0     0.00000000000000E+0
0.00000000000000E+0     0.00000000000000E+0
   BmDistLoadG            8     363       Z        1     2.64000000000000E+0
2.64000000000000E+0     0.00000000000000E+0     0.00000000000000E+0
0.00000000000000E+0     0.00000000000000E+0
```

```
   BmDistLoadG              8     364      Z      1     2.64000000000000E+0
2.64000000000000E+0      0.00000000000000E+0      0.00000000000000E+0
0.00000000000000E+0      0.00000000000000E+0
   BmDistLoadG              8     365      Z      1     2.64000000000000E+0
2.64000000000000E+0      0.00000000000000E+0      0.00000000000000E+0
0.00000000000000E+0      0.00000000000000E+0
   BmDistLoadG              8     366      Z      1     2.64000000000000E+0
2.64000000000000E+0      0.00000000000000E+0      0.00000000000000E+0
0.00000000000000E+0      0.00000000000000E+0
   BmDistLoadG              8     367      Z      1     2.64000000000000E+0
2.64000000000000E+0      0.00000000000000E+0      0.00000000000000E+0
0.00000000000000E+0      0.00000000000000E+0
   BmDistLoadG              8     368      Z      1     2.64000000000000E+0
2.64000000000000E+0      0.00000000000000E+0      0.00000000000000E+0
0.00000000000000E+0      0.00000000000000E+0
   BmDistLoadG              8     369      Z      1     2.64000000000000E+0
2.64000000000000E+0      0.00000000000000E+0      0.00000000000000E+0
0.00000000000000E+0      0.00000000000000E+0
   BmDistLoadG              8     370      Z      1     2.64000000000000E+0
2.64000000000000E+0      0.00000000000000E+0      0.00000000000000E+0
0.00000000000000E+0      0.00000000000000E+0
   BmDistLoadG              8     371      Z      1     2.64000000000000E+0
2.64000000000000E+0      0.00000000000000E+0      0.00000000000000E+0
0.00000000000000E+0      0.00000000000000E+0
   BmDistLoadG              8     372      Z      1     2.64000000000000E+0
2.64000000000000E+0      0.00000000000000E+0      0.00000000000000E+0
0.00000000000000E+0      0.00000000000000E+0
   BmDistLoadG              8     373      Z      1     2.64000000000000E+0
2.64000000000000E+0      0.00000000000000E+0      0.00000000000000E+0
0.00000000000000E+0      0.00000000000000E+0
   BmDistLoadG              8     374      Z      1     2.64000000000000E+0
2.64000000000000E+0      0.00000000000000E+0      0.00000000000000E+0
0.00000000000000E+0      0.00000000000000E+0
   BmDistLoadG              8     375      Z      1     2.64000000000000E+0
2.64000000000000E+0      0.00000000000000E+0      0.00000000000000E+0
0.00000000000000E+0      0.00000000000000E+0
   BmDistLoadG              8     376      Z      1     2.64000000000000E+0
2.64000000000000E+0      0.00000000000000E+0      0.00000000000000E+0
0.00000000000000E+0      0.00000000000000E+0
   BmDistLoadG              8     377      Z      1     2.64000000000000E+0
2.64000000000000E+0      0.00000000000000E+0      0.00000000000000E+0
0.00000000000000E+0      0.00000000000000E+0
   BmDistLoadG              8     378      Z      1     2.64000000000000E+0
2.64000000000000E+0      0.00000000000000E+0      0.00000000000000E+0
0.00000000000000E+0      0.00000000000000E+0
   BmDistLoadG              8     379      Z      1     2.64000000000000E+0
2.64000000000000E+0      0.00000000000000E+0      0.00000000000000E+0
0.00000000000000E+0      0.00000000000000E+0
   BmDistLoadG              8     380      Z      1     2.64000000000000E+0
2.64000000000000E+0      0.00000000000000E+0      0.00000000000000E+0
0.00000000000000E+0      0.00000000000000E+0
   BmDistLoadG              8     381      Z      1     2.64000000000000E+0
2.64000000000000E+0      0.00000000000000E+0      0.00000000000000E+0
0.00000000000000E+0      0.00000000000000E+0
```

```
   BmDistLoadG              8      382       Z        1      2.64000000000000E+0
2.64000000000000E+0      0.00000000000000E+0      0.00000000000000E+0
0.00000000000000E+0      0.00000000000000E+0
   BmDistLoadG              8      383       Z        1      2.64000000000000E+0
2.64000000000000E+0      0.00000000000000E+0      0.00000000000000E+0
0.00000000000000E+0      0.00000000000000E+0
   BmDistLoadG              8      384       Z        1      2.64000000000000E+0
2.64000000000000E+0      0.00000000000000E+0      0.00000000000000E+0
0.00000000000000E+0      0.00000000000000E+0
   BmDistLoadG              8      385       Z        1      2.64000000000000E+0
2.64000000000000E+0      0.00000000000000E+0      0.00000000000000E+0
0.00000000000000E+0      0.00000000000000E+0
   BmDistLoadG              8      386       Z        1      2.64000000000000E+0
2.64000000000000E+0      0.00000000000000E+0      0.00000000000000E+0
0.00000000000000E+0      0.00000000000000E+0
   BmDistLoadG              8      387       Z        1      2.64000000000000E+0
2.64000000000000E+0      0.00000000000000E+0      0.00000000000000E+0
0.00000000000000E+0      0.00000000000000E+0
   BmDistLoadG              8      388       Z        1      2.64000000000000E+0
2.64000000000000E+0      0.00000000000000E+0      0.00000000000000E+0
0.00000000000000E+0      0.00000000000000E+0
   BmDistLoadG              8      389       Z        1      2.64000000000000E+0
2.64000000000000E+0      0.00000000000000E+0      0.00000000000000E+0
0.00000000000000E+0      0.00000000000000E+0
   BmDistLoadG              8      390       Z        1      2.64000000000000E+0
2.64000000000000E+0      0.00000000000000E+0      0.00000000000000E+0
0.00000000000000E+0      0.00000000000000E+0
   BmDistLoadG              8      391       Z        1      2.64000000000000E+0
2.64000000000000E+0      0.00000000000000E+0      0.00000000000000E+0
0.00000000000000E+0      0.00000000000000E+0
   BmDistLoadG              8      392       Z        1      2.64000000000000E+0
2.64000000000000E+0      0.00000000000000E+0      0.00000000000000E+0
0.00000000000000E+0      0.00000000000000E+0
   BmDistLoadG              8      393       Z        1      2.64000000000000E+0
2.64000000000000E+0      0.00000000000000E+0      0.00000000000000E+0
0.00000000000000E+0      0.00000000000000E+0
   BmDistLoadG              8      394       Z        1      2.64000000000000E+0
2.64000000000000E+0      0.00000000000000E+0      0.00000000000000E+0
0.00000000000000E+0      0.00000000000000E+0
   BmDistLoadG              8      395       Z        1      2.64000000000000E+0
2.64000000000000E+0      0.00000000000000E+0      0.00000000000000E+0
0.00000000000000E+0      0.00000000000000E+0
   BmDistLoadG              8      396       Z        1      2.64000000000000E+0
2.64000000000000E+0      0.00000000000000E+0      0.00000000000000E+0
0.00000000000000E+0      0.00000000000000E+0
   BmDistLoadG              8      397       Z        1      2.64000000000000E+0
2.64000000000000E+0      0.00000000000000E+0      0.00000000000000E+0
0.00000000000000E+0      0.00000000000000E+0
   BmDistLoadG              8      398       Z        1      2.64000000000000E+0
2.64000000000000E+0      0.00000000000000E+0      0.00000000000000E+0
0.00000000000000E+0      0.00000000000000E+0
   BmDistLoadG              8      399       Z        1      2.64000000000000E+0
2.64000000000000E+0      0.00000000000000E+0      0.00000000000000E+0
0.00000000000000E+0      0.00000000000000E+0
```

```
   BmDistLoadG              8     400      Z      1     2.64000000000000E+0
2.64000000000000E+0      0.00000000000000E+0      0.00000000000000E+0
0.00000000000000E+0      0.00000000000000E+0
   BmDistLoadG              8     401      Z      1     2.64000000000000E+0
2.64000000000000E+0      0.00000000000000E+0      0.00000000000000E+0
0.00000000000000E+0      0.00000000000000E+0
   BmDistLoadG              8     402      Z      1     2.64000000000000E+0
2.64000000000000E+0      0.00000000000000E+0      0.00000000000000E+0
0.00000000000000E+0      0.00000000000000E+0
   BmDistLoadG              8     403      Z      1     2.64000000000000E+0
2.64000000000000E+0      0.00000000000000E+0      0.00000000000000E+0
0.00000000000000E+0      0.00000000000000E+0
   BmDistLoadG              8     404      Z      1     2.64000000000000E+0
2.64000000000000E+0      0.00000000000000E+0      0.00000000000000E+0
0.00000000000000E+0      0.00000000000000E+0
   BmDistLoadG              8     405      Z      1     2.64000000000000E+0
2.64000000000000E+0      0.00000000000000E+0      0.00000000000000E+0
0.00000000000000E+0      0.00000000000000E+0
   BmDistLoadG              8     406      Z      1     2.64000000000000E+0
2.64000000000000E+0      0.00000000000000E+0      0.00000000000000E+0
0.00000000000000E+0      0.00000000000000E+0
   BmDistLoadG              8     407      Z      1     2.64000000000000E+0
2.64000000000000E+0      0.00000000000000E+0      0.00000000000000E+0
0.00000000000000E+0      0.00000000000000E+0
   BmDistLoadG              8     408      Z      1     2.64000000000000E+0
2.64000000000000E+0      0.00000000000000E+0      0.00000000000000E+0
0.00000000000000E+0      0.00000000000000E+0
   BmDistLoadG              8     409      Z      1     2.64000000000000E+0
2.64000000000000E+0      0.00000000000000E+0      0.00000000000000E+0
0.00000000000000E+0      0.00000000000000E+0
   BmDistLoadG              8     410      Z      1     2.64000000000000E+0
2.64000000000000E+0      0.00000000000000E+0      0.00000000000000E+0
0.00000000000000E+0      0.00000000000000E+0
   BmDistLoadG              8     411      Z      1     2.64000000000000E+0
2.64000000000000E+0      0.00000000000000E+0      0.00000000000000E+0
0.00000000000000E+0      0.00000000000000E+0
   BmDistLoadG              8     412      Z      1     2.64000000000000E+0
2.64000000000000E+0      0.00000000000000E+0      0.00000000000000E+0
0.00000000000000E+0      0.00000000000000E+0
   BmDistLoadG              8     413      Z      1     2.64000000000000E+0
2.64000000000000E+0      0.00000000000000E+0      0.00000000000000E+0
0.00000000000000E+0      0.00000000000000E+0
   BmDistLoadG              8     414      Z      1     2.64000000000000E+0
2.64000000000000E+0      0.00000000000000E+0      0.00000000000000E+0
0.00000000000000E+0      0.00000000000000E+0
   BmDistLoadG              8     415      Z      1     2.64000000000000E+0
2.64000000000000E+0      0.00000000000000E+0      0.00000000000000E+0
0.00000000000000E+0      0.00000000000000E+0
   BmDistLoadG              8     416      Z      1     2.64000000000000E+0
2.64000000000000E+0      0.00000000000000E+0      0.00000000000000E+0
0.00000000000000E+0      0.00000000000000E+0
   BmDistLoadG              8     417      Z      1     2.64000000000000E+0
2.64000000000000E+0      0.00000000000000E+0      0.00000000000000E+0
0.00000000000000E+0      0.00000000000000E+0
```

```
   BmDistLoadG              8     418      Z      1     2.64000000000000E+0
2.64000000000000E+0      0.00000000000000E+0      0.00000000000000E+0
0.00000000000000E+0      0.00000000000000E+0
   BmDistLoadG              8     419      Z      1     2.64000000000000E+0
2.64000000000000E+0      0.00000000000000E+0      0.00000000000000E+0
0.00000000000000E+0      0.00000000000000E+0
   BmDistLoadG              8     420      Z      1     2.64000000000000E+0
2.64000000000000E+0      0.00000000000000E+0      0.00000000000000E+0
0.00000000000000E+0      0.00000000000000E+0
   BmDistLoadG              8     421      Z      1     2.64000000000000E+0
2.64000000000000E+0      0.00000000000000E+0      0.00000000000000E+0
0.00000000000000E+0      0.00000000000000E+0
   BmDistLoadG              8     422      Z      1     2.64000000000000E+0
2.64000000000000E+0      0.00000000000000E+0      0.00000000000000E+0
0.00000000000000E+0      0.00000000000000E+0
   BmDistLoadG              8     423      Z      1     2.64000000000000E+0
2.64000000000000E+0      0.00000000000000E+0      0.00000000000000E+0
0.00000000000000E+0      0.00000000000000E+0
   BmDistLoadG              8     424      Z      1     2.64000000000000E+0
2.64000000000000E+0      0.00000000000000E+0      0.00000000000000E+0
0.00000000000000E+0      0.00000000000000E+0
   BmDistLoadG              8     425      Z      1     2.64000000000000E+0
2.64000000000000E+0      0.00000000000000E+0      0.00000000000000E+0
0.00000000000000E+0      0.00000000000000E+0
   BmDistLoadG              8     426      Z      1     2.64000000000000E+0
2.64000000000000E+0      0.00000000000000E+0      0.00000000000000E+0
0.00000000000000E+0      0.00000000000000E+0
   BmDistLoadG              8     427      Z      1     2.64000000000000E+0
2.64000000000000E+0      0.00000000000000E+0      0.00000000000000E+0
0.00000000000000E+0      0.00000000000000E+0
   BmDistLoadG              8     428      Z      1     2.64000000000000E+0
2.64000000000000E+0      0.00000000000000E+0      0.00000000000000E+0
0.00000000000000E+0      0.00000000000000E+0
   BmDistLoadG              8     429      Z      1     2.64000000000000E+0
2.64000000000000E+0      0.00000000000000E+0      0.00000000000000E+0
0.00000000000000E+0      0.00000000000000E+0
   BmDistLoadG              8     430      Z      1     2.64000000000000E+0
2.64000000000000E+0      0.00000000000000E+0      0.00000000000000E+0
0.00000000000000E+0      0.00000000000000E+0
   BmDistLoadG              8     431      Z      1     2.64000000000000E+0
2.64000000000000E+0      0.00000000000000E+0      0.00000000000000E+0
0.00000000000000E+0      0.00000000000000E+0
   BmDistLoadG              8     432      Z      1     2.64000000000000E+0
2.64000000000000E+0      0.00000000000000E+0      0.00000000000000E+0
0.00000000000000E+0      0.00000000000000E+0
   BmDistLoadG              8     433      Z      1     2.64000000000000E+0
2.64000000000000E+0      0.00000000000000E+0      0.00000000000000E+0
0.00000000000000E+0      0.00000000000000E+0
   BmDistLoadG              8     434      Y      1     1.20000000000000E+0
1.20000000000000E+0      0.00000000000000E+0      0.00000000000000E+0
0.00000000000000E+0      0.00000000000000E+0
   BmDistLoadG              8     435      Y      1     1.20000000000000E+0
1.20000000000000E+0      0.00000000000000E+0      0.00000000000000E+0
0.00000000000000E+0      0.00000000000000E+0
```

```
   BmDistLoadG              8     436      Y      1     1.20000000000000E+0
1.20000000000000E+0      0.00000000000000E+0      0.00000000000000E+0
0.00000000000000E+0      0.00000000000000E+0
   BmDistLoadG              8     437      Y      1     1.20000000000000E+0
1.20000000000000E+0      0.00000000000000E+0      0.00000000000000E+0
0.00000000000000E+0      0.00000000000000E+0
   BmDistLoadG              8     438      Y      1     1.20000000000000E+0
1.20000000000000E+0      0.00000000000000E+0      0.00000000000000E+0
0.00000000000000E+0      0.00000000000000E+0
   BmDistLoadG              8     649      Z      1     1.32000000000000E+0
1.32000000000000E+0      0.00000000000000E+0      0.00000000000000E+0
0.00000000000000E+0      0.00000000000000E+0
   BmDistLoadG              8     650      Z      1     1.32000000000000E+0
1.32000000000000E+0      0.00000000000000E+0      0.00000000000000E+0
0.00000000000000E+0      0.00000000000000E+0
   BmDistLoadG              8     651      Z      1     1.32000000000000E+0
1.32000000000000E+0      0.00000000000000E+0      0.00000000000000E+0
0.00000000000000E+0      0.00000000000000E+0
   BmDistLoadG              8     652      Z      1     1.32000000000000E+0
1.32000000000000E+0      0.00000000000000E+0      0.00000000000000E+0
0.00000000000000E+0      0.00000000000000E+0
   BmDistLoadG              8     653      Z      1     2.64000000000000E+0
2.64000000000000E+0      0.00000000000000E+0      0.00000000000000E+0
0.00000000000000E+0      0.00000000000000E+0
   BmDistLoadG              8     654      Z      1     2.64000000000000E+0
2.64000000000000E+0      0.00000000000000E+0      0.00000000000000E+0
0.00000000000000E+0      0.00000000000000E+0
   BmDistLoadG              8     655      Z      1     2.64000000000000E+0
2.64000000000000E+0      0.00000000000000E+0      0.00000000000000E+0
0.00000000000000E+0      0.00000000000000E+0
   BmDistLoadG              8     656      Z      1     2.64000000000000E+0
2.64000000000000E+0      0.00000000000000E+0      0.00000000000000E+0
0.00000000000000E+0      0.00000000000000E+0
   BmDistLoadG              8     657      Z      1     2.64000000000000E+0
2.64000000000000E+0      0.00000000000000E+0      0.00000000000000E+0
0.00000000000000E+0      0.00000000000000E+0
   BmDistLoadG              8     658      Z      1     2.64000000000000E+0
2.64000000000000E+0      0.00000000000000E+0      0.00000000000000E+0
0.00000000000000E+0      0.00000000000000E+0
   BmDistLoadG              8     659      Z      1     2.64000000000000E+0
2.64000000000000E+0      0.00000000000000E+0      0.00000000000000E+0
0.00000000000000E+0      0.00000000000000E+0
   BmDistLoadG              8     660      Z      1     2.64000000000000E+0
2.64000000000000E+0      0.00000000000000E+0      0.00000000000000E+0
0.00000000000000E+0      0.00000000000000E+0
   BmDistLoadG              8     661      Z      1     2.64000000000000E+0
2.64000000000000E+0      0.00000000000000E+0      0.00000000000000E+0
0.00000000000000E+0      0.00000000000000E+0
   BmDistLoadG              8     662      Z      1     2.64000000000000E+0
2.64000000000000E+0      0.00000000000000E+0      0.00000000000000E+0
0.00000000000000E+0      0.00000000000000E+0
   BmDistLoadG              8     663      Z      1     2.64000000000000E+0
2.64000000000000E+0      0.00000000000000E+0      0.00000000000000E+0
0.00000000000000E+0      0.00000000000000E+0
```

```
   BmDistLoadG              8     664      Z      1     2.64000000000000E+0
2.64000000000000E+0      0.00000000000000E+0      0.00000000000000E+0
0.00000000000000E+0      0.00000000000000E+0
   BmDistLoadG              8     665      Z      1     2.64000000000000E+0
2.64000000000000E+0      0.00000000000000E+0      0.00000000000000E+0
0.00000000000000E+0      0.00000000000000E+0
   BmDistLoadG              8     666      Z      1     2.64000000000000E+0
2.64000000000000E+0      0.00000000000000E+0      0.00000000000000E+0
0.00000000000000E+0      0.00000000000000E+0
   BmDistLoadG              8     667      Z      1     2.64000000000000E+0
2.64000000000000E+0      0.00000000000000E+0      0.00000000000000E+0
0.00000000000000E+0      0.00000000000000E+0
   BmDistLoadG              8     668      Z      1     2.64000000000000E+0
2.64000000000000E+0      0.00000000000000E+0      0.00000000000000E+0
0.00000000000000E+0      0.00000000000000E+0

/ ____________________________________________________________________________
/ BEAM GLOBAL DISTRIBUTED LOADS
/ Q03b - Effetti Aerodinamici Convogli Y-
   BmDistLoadG             10      13      Z      1     1.32000000000000E+0
1.32000000000000E+0      0.00000000000000E+0      0.00000000000000E+0
0.00000000000000E+0      0.00000000000000E+0
   BmDistLoadG             10      14      Z      1     2.64000000000000E+0
2.64000000000000E+0      0.00000000000000E+0      0.00000000000000E+0
0.00000000000000E+0      0.00000000000000E+0
   BmDistLoadG             10      15      Z      1     2.64000000000000E+0
2.64000000000000E+0      0.00000000000000E+0      0.00000000000000E+0
0.00000000000000E+0      0.00000000000000E+0
   BmDistLoadG             10      16      Z      1     2.64000000000000E+0
2.64000000000000E+0      0.00000000000000E+0      0.00000000000000E+0
0.00000000000000E+0      0.00000000000000E+0
   BmDistLoadG             10      17      Z      1     2.64000000000000E+0
2.64000000000000E+0      0.00000000000000E+0      0.00000000000000E+0
0.00000000000000E+0      0.00000000000000E+0
   BmDistLoadG             10      18      Z      1     2.64000000000000E+0
2.64000000000000E+0      0.00000000000000E+0      0.00000000000000E+0
0.00000000000000E+0      0.00000000000000E+0
   BmDistLoadG             10      19      Z      1     2.64000000000000E+0
2.64000000000000E+0      0.00000000000000E+0      0.00000000000000E+0
0.00000000000000E+0      0.00000000000000E+0
   BmDistLoadG             10      20      Z      1     2.64000000000000E+0
2.64000000000000E+0      0.00000000000000E+0      0.00000000000000E+0
0.00000000000000E+0      0.00000000000000E+0
   BmDistLoadG             10      21      Z      1     2.64000000000000E+0
2.64000000000000E+0      0.00000000000000E+0      0.00000000000000E+0
0.00000000000000E+0      0.00000000000000E+0
   BmDistLoadG             10      22      Z      1     1.32000000000000E+0
1.32000000000000E+0      0.00000000000000E+0      0.00000000000000E+0
0.00000000000000E+0      0.00000000000000E+0
   BmDistLoadG             10      69      Y      1    -6.00000000000000E-1
-6.00000000000000E-1      0.00000000000000E+0      0.00000000000000E+0
0.00000000000000E+0      0.00000000000000E+0
   BmDistLoadG             10      70      Y      1    -6.00000000000000E-1
-6.00000000000000E-1      0.00000000000000E+0      0.00000000000000E+0
```

```
0.00000000000000E+0      0.00000000000000E+0
   BmDistLoadG            10       71       Y       1    -6.00000000000000E-1
-6.00000000000000E-1      0.00000000000000E+0      0.00000000000000E+0
0.00000000000000E+0      0.00000000000000E+0
   BmDistLoadG            10       72       Y       1    -6.00000000000000E-1
-6.00000000000000E-1      0.00000000000000E+0      0.00000000000000E+0
0.00000000000000E+0      0.00000000000000E+0
   BmDistLoadG            10       73       Y       1    -6.00000000000000E-1
-6.00000000000000E-1      0.00000000000000E+0      0.00000000000000E+0
0.00000000000000E+0      0.00000000000000E+0
   BmDistLoadG            10       74       Y       1    -1.20000000000000E+0
-1.20000000000000E+0      0.00000000000000E+0      0.00000000000000E+0
0.00000000000000E+0      0.00000000000000E+0
   BmDistLoadG            10       75       Y       1    -1.20000000000000E+0
-1.20000000000000E+0      0.00000000000000E+0      0.00000000000000E+0
0.00000000000000E+0      0.00000000000000E+0
   BmDistLoadG            10       76       Y       1    -1.20000000000000E+0
-1.20000000000000E+0      0.00000000000000E+0      0.00000000000000E+0
0.00000000000000E+0      0.00000000000000E+0
   BmDistLoadG            10       77       Y       1    -1.20000000000000E+0
-1.20000000000000E+0      0.00000000000000E+0      0.00000000000000E+0
0.00000000000000E+0      0.00000000000000E+0
   BmDistLoadG            10       78       Y       1    -1.20000000000000E+0
-1.20000000000000E+0      0.00000000000000E+0      0.00000000000000E+0
0.00000000000000E+0      0.00000000000000E+0
   BmDistLoadG            10       79       Y       1    -1.20000000000000E+0
-1.20000000000000E+0      0.00000000000000E+0      0.00000000000000E+0
0.00000000000000E+0      0.00000000000000E+0
   BmDistLoadG            10       80       Y       1    -1.20000000000000E+0
-1.20000000000000E+0      0.00000000000000E+0      0.00000000000000E+0
0.00000000000000E+0      0.00000000000000E+0
   BmDistLoadG            10       81       Y       1    -1.20000000000000E+0
-1.20000000000000E+0      0.00000000000000E+0      0.00000000000000E+0
0.00000000000000E+0      0.00000000000000E+0
   BmDistLoadG            10       82       Y       1    -1.20000000000000E+0
-1.20000000000000E+0      0.00000000000000E+0      0.00000000000000E+0
0.00000000000000E+0      0.00000000000000E+0
   BmDistLoadG            10       83       Y       1    -1.20000000000000E+0
-1.20000000000000E+0      0.00000000000000E+0      0.00000000000000E+0
0.00000000000000E+0      0.00000000000000E+0
   BmDistLoadG            10       84       Y       1    -1.20000000000000E+0
-1.20000000000000E+0      0.00000000000000E+0      0.00000000000000E+0
0.00000000000000E+0      0.00000000000000E+0
   BmDistLoadG            10       85       Y       1    -1.20000000000000E+0
-1.20000000000000E+0      0.00000000000000E+0      0.00000000000000E+0
0.00000000000000E+0      0.00000000000000E+0
   BmDistLoadG            10       86       Y       1    -1.20000000000000E+0
-1.20000000000000E+0      0.00000000000000E+0      0.00000000000000E+0
0.00000000000000E+0      0.00000000000000E+0
   BmDistLoadG            10       87       Y       1    -1.20000000000000E+0
-1.20000000000000E+0      0.00000000000000E+0      0.00000000000000E+0
0.00000000000000E+0      0.00000000000000E+0
   BmDistLoadG            10       88       Y       1    -1.20000000000000E+0
-1.20000000000000E+0      0.00000000000000E+0      0.00000000000000E+0
```

```
0.00000000000000E+0      0.00000000000000E+0
   BmDistLoadG             10     89     Y      1    -1.20000000000000E+0
-1.20000000000000E+0      0.00000000000000E+0      0.00000000000000E+0
0.00000000000000E+0      0.00000000000000E+0
   BmDistLoadG             10     90     Y      1    -1.20000000000000E+0
-1.20000000000000E+0      0.00000000000000E+0      0.00000000000000E+0
0.00000000000000E+0      0.00000000000000E+0
   BmDistLoadG             10     91     Y      1    -1.20000000000000E+0
-1.20000000000000E+0      0.00000000000000E+0      0.00000000000000E+0
0.00000000000000E+0      0.00000000000000E+0
   BmDistLoadG             10     92     Y      1    -1.20000000000000E+0
-1.20000000000000E+0      0.00000000000000E+0      0.00000000000000E+0
0.00000000000000E+0      0.00000000000000E+0
   BmDistLoadG             10     93     Y      1    -1.20000000000000E+0
-1.20000000000000E+0      0.00000000000000E+0      0.00000000000000E+0
0.00000000000000E+0      0.00000000000000E+0
   BmDistLoadG             10     94     Y      1    -1.20000000000000E+0
-1.20000000000000E+0      0.00000000000000E+0      0.00000000000000E+0
0.00000000000000E+0      0.00000000000000E+0
   BmDistLoadG             10     95     Y      1    -1.20000000000000E+0
-1.20000000000000E+0      0.00000000000000E+0      0.00000000000000E+0
0.00000000000000E+0      0.00000000000000E+0
   BmDistLoadG             10     96     Y      1    -1.20000000000000E+0
-1.20000000000000E+0      0.00000000000000E+0      0.00000000000000E+0
0.00000000000000E+0      0.00000000000000E+0
   BmDistLoadG             10     97     Y      1    -1.20000000000000E+0
-1.20000000000000E+0      0.00000000000000E+0      0.00000000000000E+0
0.00000000000000E+0      0.00000000000000E+0
   BmDistLoadG             10     98     Y      1    -1.20000000000000E+0
-1.20000000000000E+0      0.00000000000000E+0      0.00000000000000E+0
0.00000000000000E+0      0.00000000000000E+0
   BmDistLoadG             10     99     Y      1    -1.20000000000000E+0
-1.20000000000000E+0      0.00000000000000E+0      0.00000000000000E+0
0.00000000000000E+0      0.00000000000000E+0
   BmDistLoadG             10    100     Y      1    -1.20000000000000E+0
-1.20000000000000E+0      0.00000000000000E+0      0.00000000000000E+0
0.00000000000000E+0      0.00000000000000E+0
   BmDistLoadG             10    101     Y      1    -1.20000000000000E+0
-1.20000000000000E+0      0.00000000000000E+0      0.00000000000000E+0
0.00000000000000E+0      0.00000000000000E+0
   BmDistLoadG             10    102     Y      1    -1.20000000000000E+0
-1.20000000000000E+0      0.00000000000000E+0      0.00000000000000E+0
0.00000000000000E+0      0.00000000000000E+0
   BmDistLoadG             10    103     Y      1    -1.20000000000000E+0
-1.20000000000000E+0      0.00000000000000E+0      0.00000000000000E+0
0.00000000000000E+0      0.00000000000000E+0
   BmDistLoadG             10    104     Y      1    -1.20000000000000E+0
-1.20000000000000E+0      0.00000000000000E+0      0.00000000000000E+0
0.00000000000000E+0      0.00000000000000E+0
   BmDistLoadG             10    105     Y      1    -1.20000000000000E+0
-1.20000000000000E+0      0.00000000000000E+0      0.00000000000000E+0
0.00000000000000E+0      0.00000000000000E+0
   BmDistLoadG             10    106     Y      1    -1.20000000000000E+0
-1.20000000000000E+0      0.00000000000000E+0      0.00000000000000E+0
```

```
0.00000000000000E+0       0.00000000000000E+0
   BmDistLoadG              10      107       Y       1    -1.20000000000000E+0
-1.20000000000000E+0       0.00000000000000E+0       0.00000000000000E+0
0.00000000000000E+0       0.00000000000000E+0
   BmDistLoadG              10      108       Y       1    -1.20000000000000E+0
-1.20000000000000E+0       0.00000000000000E+0       0.00000000000000E+0
0.00000000000000E+0       0.00000000000000E+0
   BmDistLoadG              10      109       Y       1    -1.20000000000000E+0
-1.20000000000000E+0       0.00000000000000E+0       0.00000000000000E+0
0.00000000000000E+0       0.00000000000000E+0
   BmDistLoadG              10      110       Y       1    -1.20000000000000E+0
-1.20000000000000E+0       0.00000000000000E+0       0.00000000000000E+0
0.00000000000000E+0       0.00000000000000E+0
   BmDistLoadG              10      111       Y       1    -1.20000000000000E+0
-1.20000000000000E+0       0.00000000000000E+0       0.00000000000000E+0
0.00000000000000E+0       0.00000000000000E+0
   BmDistLoadG              10      112       Y       1    -1.20000000000000E+0
-1.20000000000000E+0       0.00000000000000E+0       0.00000000000000E+0
0.00000000000000E+0       0.00000000000000E+0
   BmDistLoadG              10      113       Y       1    -1.20000000000000E+0
-1.20000000000000E+0       0.00000000000000E+0       0.00000000000000E+0
0.00000000000000E+0       0.00000000000000E+0
   BmDistLoadG              10      114       Y       1    -6.00000000000000E-1
-6.00000000000000E-1       0.00000000000000E+0       0.00000000000000E+0
0.00000000000000E+0       0.00000000000000E+0
   BmDistLoadG              10      115       Y       1    -6.00000000000000E-1
-6.00000000000000E-1       0.00000000000000E+0       0.00000000000000E+0
0.00000000000000E+0       0.00000000000000E+0
   BmDistLoadG              10      116       Y       1    -6.00000000000000E-1
-6.00000000000000E-1       0.00000000000000E+0       0.00000000000000E+0
0.00000000000000E+0       0.00000000000000E+0
   BmDistLoadG              10      117       Y       1    -6.00000000000000E-1
-6.00000000000000E-1       0.00000000000000E+0       0.00000000000000E+0
0.00000000000000E+0       0.00000000000000E+0
   BmDistLoadG              10      118       Y       1    -6.00000000000000E-1
-6.00000000000000E-1       0.00000000000000E+0       0.00000000000000E+0
0.00000000000000E+0       0.00000000000000E+0
   BmDistLoadG              10      119       Y       1    -6.00000000000000E-1
-6.00000000000000E-1       0.00000000000000E+0       0.00000000000000E+0
0.00000000000000E+0       0.00000000000000E+0
   BmDistLoadG              10      120       Y       1    -6.00000000000000E-1
-6.00000000000000E-1       0.00000000000000E+0       0.00000000000000E+0
0.00000000000000E+0       0.00000000000000E+0
   BmDistLoadG              10      121       Y       1    -6.00000000000000E-1
-6.00000000000000E-1       0.00000000000000E+0       0.00000000000000E+0
0.00000000000000E+0       0.00000000000000E+0
   BmDistLoadG              10      122       Y       1    -6.00000000000000E-1
-6.00000000000000E-1       0.00000000000000E+0       0.00000000000000E+0
0.00000000000000E+0       0.00000000000000E+0
   BmDistLoadG              10      123       Y       1    -6.00000000000000E-1
-6.00000000000000E-1       0.00000000000000E+0       0.00000000000000E+0
0.00000000000000E+0       0.00000000000000E+0
   BmDistLoadG              10      124       Y       1    -1.20000000000000E+0
-1.20000000000000E+0       0.00000000000000E+0       0.00000000000000E+0
```

```
0.00000000000000E+0      0.00000000000000E+0
   BmDistLoadG             10     125      Y      1    -1.20000000000000E+0
-1.20000000000000E+0      0.00000000000000E+0      0.00000000000000E+0
0.00000000000000E+0      0.00000000000000E+0
   BmDistLoadG             10     126      Y      1    -1.20000000000000E+0
-1.20000000000000E+0      0.00000000000000E+0      0.00000000000000E+0
0.00000000000000E+0      0.00000000000000E+0
   BmDistLoadG             10     127      Y      1    -1.20000000000000E+0
-1.20000000000000E+0      0.00000000000000E+0      0.00000000000000E+0
0.00000000000000E+0      0.00000000000000E+0
   BmDistLoadG             10     128      Y      1    -1.20000000000000E+0
-1.20000000000000E+0      0.00000000000000E+0      0.00000000000000E+0
0.00000000000000E+0      0.00000000000000E+0
   BmDistLoadG             10     129      Y      1    -1.20000000000000E+0
-1.20000000000000E+0      0.00000000000000E+0      0.00000000000000E+0
0.00000000000000E+0      0.00000000000000E+0
   BmDistLoadG             10     130      Y      1    -1.20000000000000E+0
-1.20000000000000E+0      0.00000000000000E+0      0.00000000000000E+0
0.00000000000000E+0      0.00000000000000E+0
   BmDistLoadG             10     131      Y      1    -1.20000000000000E+0
-1.20000000000000E+0      0.00000000000000E+0      0.00000000000000E+0
0.00000000000000E+0      0.00000000000000E+0
   BmDistLoadG             10     132      Y      1    -1.20000000000000E+0
-1.20000000000000E+0      0.00000000000000E+0      0.00000000000000E+0
0.00000000000000E+0      0.00000000000000E+0
   BmDistLoadG             10     133      Y      1    -1.20000000000000E+0
-1.20000000000000E+0      0.00000000000000E+0      0.00000000000000E+0
0.00000000000000E+0      0.00000000000000E+0
   BmDistLoadG             10     134      Y      1    -1.20000000000000E+0
-1.20000000000000E+0      0.00000000000000E+0      0.00000000000000E+0
0.00000000000000E+0      0.00000000000000E+0
   BmDistLoadG             10     135      Y      1    -1.20000000000000E+0
-1.20000000000000E+0      0.00000000000000E+0      0.00000000000000E+0
0.00000000000000E+0      0.00000000000000E+0
   BmDistLoadG             10     136      Y      1    -1.20000000000000E+0
-1.20000000000000E+0      0.00000000000000E+0      0.00000000000000E+0
0.00000000000000E+0      0.00000000000000E+0
   BmDistLoadG             10     137      Y      1    -1.20000000000000E+0
-1.20000000000000E+0      0.00000000000000E+0      0.00000000000000E+0
0.00000000000000E+0      0.00000000000000E+0
   BmDistLoadG             10     138      Y      1    -1.20000000000000E+0
-1.20000000000000E+0      0.00000000000000E+0      0.00000000000000E+0
0.00000000000000E+0      0.00000000000000E+0
   BmDistLoadG             10     139      Y      1    -1.20000000000000E+0
-1.20000000000000E+0      0.00000000000000E+0      0.00000000000000E+0
0.00000000000000E+0      0.00000000000000E+0
   BmDistLoadG             10     140      Y      1    -1.20000000000000E+0
-1.20000000000000E+0      0.00000000000000E+0      0.00000000000000E+0
0.00000000000000E+0      0.00000000000000E+0
   BmDistLoadG             10     141      Y      1    -1.20000000000000E+0
-1.20000000000000E+0      0.00000000000000E+0      0.00000000000000E+0
0.00000000000000E+0      0.00000000000000E+0
   BmDistLoadG             10     142      Y      1    -1.20000000000000E+0
-1.20000000000000E+0      0.00000000000000E+0      0.00000000000000E+0
```

```
0.00000000000000E+0      0.00000000000000E+0
   BmDistLoadG             10      143       Y       1    -1.20000000000000E+0
-1.20000000000000E+0      0.00000000000000E+0      0.00000000000000E+0
0.00000000000000E+0      0.00000000000000E+0
   BmDistLoadG             10      144       Y       1    -1.20000000000000E+0
-1.20000000000000E+0      0.00000000000000E+0      0.00000000000000E+0
0.00000000000000E+0      0.00000000000000E+0
   BmDistLoadG             10      145       Y       1    -1.20000000000000E+0
-1.20000000000000E+0      0.00000000000000E+0      0.00000000000000E+0
0.00000000000000E+0      0.00000000000000E+0
   BmDistLoadG             10      146       Y       1    -1.20000000000000E+0
-1.20000000000000E+0      0.00000000000000E+0      0.00000000000000E+0
0.00000000000000E+0      0.00000000000000E+0
   BmDistLoadG             10      147       Y       1    -1.20000000000000E+0
-1.20000000000000E+0      0.00000000000000E+0      0.00000000000000E+0
0.00000000000000E+0      0.00000000000000E+0
   BmDistLoadG             10      148       Y       1    -1.20000000000000E+0
-1.20000000000000E+0      0.00000000000000E+0      0.00000000000000E+0
0.00000000000000E+0      0.00000000000000E+0
   BmDistLoadG             10      149       Y       1    -1.20000000000000E+0
-1.20000000000000E+0      0.00000000000000E+0      0.00000000000000E+0
0.00000000000000E+0      0.00000000000000E+0
   BmDistLoadG             10      150       Y       1    -1.20000000000000E+0
-1.20000000000000E+0      0.00000000000000E+0      0.00000000000000E+0
0.00000000000000E+0      0.00000000000000E+0
   BmDistLoadG             10      151       Y       1    -1.20000000000000E+0
-1.20000000000000E+0      0.00000000000000E+0      0.00000000000000E+0
0.00000000000000E+0      0.00000000000000E+0
   BmDistLoadG             10      152       Y       1    -1.20000000000000E+0
-1.20000000000000E+0      0.00000000000000E+0      0.00000000000000E+0
0.00000000000000E+0      0.00000000000000E+0
   BmDistLoadG             10      153       Y       1    -1.20000000000000E+0
-1.20000000000000E+0      0.00000000000000E+0      0.00000000000000E+0
0.00000000000000E+0      0.00000000000000E+0
   BmDistLoadG             10      154       Y       1    -1.20000000000000E+0
-1.20000000000000E+0      0.00000000000000E+0      0.00000000000000E+0
0.00000000000000E+0      0.00000000000000E+0
   BmDistLoadG             10      155       Y       1    -1.20000000000000E+0
-1.20000000000000E+0      0.00000000000000E+0      0.00000000000000E+0
0.00000000000000E+0      0.00000000000000E+0
   BmDistLoadG             10      156       Y       1    -1.20000000000000E+0
-1.20000000000000E+0      0.00000000000000E+0      0.00000000000000E+0
0.00000000000000E+0      0.00000000000000E+0
   BmDistLoadG             10      157       Y       1    -1.20000000000000E+0
-1.20000000000000E+0      0.00000000000000E+0      0.00000000000000E+0
0.00000000000000E+0      0.00000000000000E+0
   BmDistLoadG             10      158       Y       1    -1.20000000000000E+0
-1.20000000000000E+0      0.00000000000000E+0      0.00000000000000E+0
0.00000000000000E+0      0.00000000000000E+0
   BmDistLoadG             10      159       Y       1    -6.00000000000000E-1
-6.00000000000000E-1      0.00000000000000E+0      0.00000000000000E+0
0.00000000000000E+0      0.00000000000000E+0
   BmDistLoadG             10      160       Y       1    -6.00000000000000E-1
-6.00000000000000E-1      0.00000000000000E+0      0.00000000000000E+0
```

```
0.00000000000000E+0      0.00000000000000E+0
   BmDistLoadG             10     161      Y      1    -6.00000000000000E-1
-6.00000000000000E-1      0.00000000000000E+0      0.00000000000000E+0
0.00000000000000E+0      0.00000000000000E+0
   BmDistLoadG             10     162      Y      1    -6.00000000000000E-1
-6.00000000000000E-1      0.00000000000000E+0      0.00000000000000E+0
0.00000000000000E+0      0.00000000000000E+0
   BmDistLoadG             10     163      Y      1    -6.00000000000000E-1
-6.00000000000000E-1      0.00000000000000E+0      0.00000000000000E+0
0.00000000000000E+0      0.00000000000000E+0
   BmDistLoadG             10     164      Z      1     1.32000000000000E+0
1.32000000000000E+0      0.00000000000000E+0      0.00000000000000E+0
0.00000000000000E+0      0.00000000000000E+0
   BmDistLoadG             10     165      Z      1     1.32000000000000E+0
1.32000000000000E+0      0.00000000000000E+0      0.00000000000000E+0
0.00000000000000E+0      0.00000000000000E+0
   BmDistLoadG             10     166      Z      1     1.32000000000000E+0
1.32000000000000E+0      0.00000000000000E+0      0.00000000000000E+0
0.00000000000000E+0      0.00000000000000E+0
   BmDistLoadG             10     167      Z      1     1.32000000000000E+0
1.32000000000000E+0      0.00000000000000E+0      0.00000000000000E+0
0.00000000000000E+0      0.00000000000000E+0
   BmDistLoadG             10     168      Z      1     1.32000000000000E+0
1.32000000000000E+0      0.00000000000000E+0      0.00000000000000E+0
0.00000000000000E+0      0.00000000000000E+0
   BmDistLoadG             10     169      Z      1     1.32000000000000E+0
1.32000000000000E+0      0.00000000000000E+0      0.00000000000000E+0
0.00000000000000E+0      0.00000000000000E+0
   BmDistLoadG             10     170      Z      1     1.32000000000000E+0
1.32000000000000E+0      0.00000000000000E+0      0.00000000000000E+0
0.00000000000000E+0      0.00000000000000E+0
   BmDistLoadG             10     171      Z      1     1.32000000000000E+0
1.32000000000000E+0      0.00000000000000E+0      0.00000000000000E+0
0.00000000000000E+0      0.00000000000000E+0
   BmDistLoadG             10     172      Z      1     1.32000000000000E+0
1.32000000000000E+0      0.00000000000000E+0      0.00000000000000E+0
0.00000000000000E+0      0.00000000000000E+0
   BmDistLoadG             10     173      Z      1     1.32000000000000E+0
1.32000000000000E+0      0.00000000000000E+0      0.00000000000000E+0
0.00000000000000E+0      0.00000000000000E+0
   BmDistLoadG             10     174      Z      1     1.32000000000000E+0
1.32000000000000E+0      0.00000000000000E+0      0.00000000000000E+0
0.00000000000000E+0      0.00000000000000E+0
   BmDistLoadG             10     175      Z      1     1.32000000000000E+0
1.32000000000000E+0      0.00000000000000E+0      0.00000000000000E+0
0.00000000000000E+0      0.00000000000000E+0
   BmDistLoadG             10     176      Z      1     1.32000000000000E+0
1.32000000000000E+0      0.00000000000000E+0      0.00000000000000E+0
0.00000000000000E+0      0.00000000000000E+0
   BmDistLoadG             10     177      Z      1     1.32000000000000E+0
1.32000000000000E+0      0.00000000000000E+0      0.00000000000000E+0
0.00000000000000E+0      0.00000000000000E+0
   BmDistLoadG             10     178      Z      1     1.32000000000000E+0
1.32000000000000E+0      0.00000000000000E+0      0.00000000000000E+0
```

```
0.00000000000000E+0      0.00000000000000E+0
   BmDistLoadG             10      179       Z        1      1.32000000000000E+0
1.32000000000000E+0      0.00000000000000E+0      0.00000000000000E+0
0.00000000000000E+0      0.00000000000000E+0
   BmDistLoadG             10      180       Z        1      1.32000000000000E+0
1.32000000000000E+0      0.00000000000000E+0      0.00000000000000E+0
0.00000000000000E+0      0.00000000000000E+0
   BmDistLoadG             10      181       Z        1      1.32000000000000E+0
1.32000000000000E+0      0.00000000000000E+0      0.00000000000000E+0
0.00000000000000E+0      0.00000000000000E+0
   BmDistLoadG             10      182       Z        1      1.32000000000000E+0
1.32000000000000E+0      0.00000000000000E+0      0.00000000000000E+0
0.00000000000000E+0      0.00000000000000E+0
   BmDistLoadG             10      183       Z        1      1.32000000000000E+0
1.32000000000000E+0      0.00000000000000E+0      0.00000000000000E+0
0.00000000000000E+0      0.00000000000000E+0
   BmDistLoadG             10      184       Z        1      1.32000000000000E+0
1.32000000000000E+0      0.00000000000000E+0      0.00000000000000E+0
0.00000000000000E+0      0.00000000000000E+0
   BmDistLoadG             10      185       Z        1      1.32000000000000E+0
1.32000000000000E+0      0.00000000000000E+0      0.00000000000000E+0
0.00000000000000E+0      0.00000000000000E+0
   BmDistLoadG             10      186       Z        1      1.32000000000000E+0
1.32000000000000E+0      0.00000000000000E+0      0.00000000000000E+0
0.00000000000000E+0      0.00000000000000E+0
   BmDistLoadG             10      187       Z        1      1.32000000000000E+0
1.32000000000000E+0      0.00000000000000E+0      0.00000000000000E+0
0.00000000000000E+0      0.00000000000000E+0
   BmDistLoadG             10      188       Z        1      1.32000000000000E+0
1.32000000000000E+0      0.00000000000000E+0      0.00000000000000E+0
0.00000000000000E+0      0.00000000000000E+0
   BmDistLoadG             10      189       Z        1      1.32000000000000E+0
1.32000000000000E+0      0.00000000000000E+0      0.00000000000000E+0
0.00000000000000E+0      0.00000000000000E+0
   BmDistLoadG             10      190       Z        1      1.32000000000000E+0
1.32000000000000E+0      0.00000000000000E+0      0.00000000000000E+0
0.00000000000000E+0      0.00000000000000E+0
   BmDistLoadG             10      191       Z        1      1.32000000000000E+0
1.32000000000000E+0      0.00000000000000E+0      0.00000000000000E+0
0.00000000000000E+0      0.00000000000000E+0
   BmDistLoadG             10      192       Z        1      1.32000000000000E+0
1.32000000000000E+0      0.00000000000000E+0      0.00000000000000E+0
0.00000000000000E+0      0.00000000000000E+0
   BmDistLoadG             10      193       Z        1      1.32000000000000E+0
1.32000000000000E+0      0.00000000000000E+0      0.00000000000000E+0
0.00000000000000E+0      0.00000000000000E+0
   BmDistLoadG             10      194       Z        1      1.32000000000000E+0
1.32000000000000E+0      0.00000000000000E+0      0.00000000000000E+0
0.00000000000000E+0      0.00000000000000E+0
   BmDistLoadG             10      195       Z        1      1.32000000000000E+0
1.32000000000000E+0      0.00000000000000E+0      0.00000000000000E+0
0.00000000000000E+0      0.00000000000000E+0
   BmDistLoadG             10      196       Z        1      1.32000000000000E+0
1.32000000000000E+0      0.00000000000000E+0      0.00000000000000E+0
```

```
0.00000000000000E+0     0.00000000000000E+0
   BmDistLoadG            10     197      Z     1     1.32000000000000E+0
1.32000000000000E+0     0.00000000000000E+0     0.00000000000000E+0
0.00000000000000E+0     0.00000000000000E+0
   BmDistLoadG            10     198      Z     1     1.32000000000000E+0
1.32000000000000E+0     0.00000000000000E+0     0.00000000000000E+0
0.00000000000000E+0     0.00000000000000E+0
   BmDistLoadG            10     199      Z     1     1.32000000000000E+0
1.32000000000000E+0     0.00000000000000E+0     0.00000000000000E+0
0.00000000000000E+0     0.00000000000000E+0
   BmDistLoadG            10     200      Z     1     1.32000000000000E+0
1.32000000000000E+0     0.00000000000000E+0     0.00000000000000E+0
0.00000000000000E+0     0.00000000000000E+0
   BmDistLoadG            10     201      Z     1     1.32000000000000E+0
1.32000000000000E+0     0.00000000000000E+0     0.00000000000000E+0
0.00000000000000E+0     0.00000000000000E+0
   BmDistLoadG            10     202      Z     1     1.32000000000000E+0
1.32000000000000E+0     0.00000000000000E+0     0.00000000000000E+0
0.00000000000000E+0     0.00000000000000E+0
   BmDistLoadG            10     203      Z     1     1.32000000000000E+0
1.32000000000000E+0     0.00000000000000E+0     0.00000000000000E+0
0.00000000000000E+0     0.00000000000000E+0
   BmDistLoadG            10     204      Z     1     1.32000000000000E+0
1.32000000000000E+0     0.00000000000000E+0     0.00000000000000E+0
0.00000000000000E+0     0.00000000000000E+0
   BmDistLoadG            10     205      Z     1     1.32000000000000E+0
1.32000000000000E+0     0.00000000000000E+0     0.00000000000000E+0
0.00000000000000E+0     0.00000000000000E+0
   BmDistLoadG            10     206      Z     1     1.32000000000000E+0
1.32000000000000E+0     0.00000000000000E+0     0.00000000000000E+0
0.00000000000000E+0     0.00000000000000E+0
   BmDistLoadG            10     207      Z     1     1.32000000000000E+0
1.32000000000000E+0     0.00000000000000E+0     0.00000000000000E+0
0.00000000000000E+0     0.00000000000000E+0
   BmDistLoadG            10     208      Z     1     1.32000000000000E+0
1.32000000000000E+0     0.00000000000000E+0     0.00000000000000E+0
0.00000000000000E+0     0.00000000000000E+0
   BmDistLoadG            10     209      Z     1     1.32000000000000E+0
1.32000000000000E+0     0.00000000000000E+0     0.00000000000000E+0
0.00000000000000E+0     0.00000000000000E+0
   BmDistLoadG            10     210      Z     1     1.32000000000000E+0
1.32000000000000E+0     0.00000000000000E+0     0.00000000000000E+0
0.00000000000000E+0     0.00000000000000E+0
   BmDistLoadG            10     211      Z     1     1.32000000000000E+0
1.32000000000000E+0     0.00000000000000E+0     0.00000000000000E+0
0.00000000000000E+0     0.00000000000000E+0
   BmDistLoadG            10     212      Z     1     1.32000000000000E+0
1.32000000000000E+0     0.00000000000000E+0     0.00000000000000E+0
0.00000000000000E+0     0.00000000000000E+0
   BmDistLoadG            10     213      Z     1     1.32000000000000E+0
1.32000000000000E+0     0.00000000000000E+0     0.00000000000000E+0
0.00000000000000E+0     0.00000000000000E+0
   BmDistLoadG            10     214      Z     1     1.32000000000000E+0
1.32000000000000E+0     0.00000000000000E+0     0.00000000000000E+0
```

```
0.00000000000000E+0      0.00000000000000E+0
   BmDistLoadG             10     215      Z      1     1.32000000000000E+0
1.32000000000000E+0      0.00000000000000E+0      0.00000000000000E+0
0.00000000000000E+0      0.00000000000000E+0
   BmDistLoadG             10     216      Z      1     1.32000000000000E+0
1.32000000000000E+0      0.00000000000000E+0      0.00000000000000E+0
0.00000000000000E+0      0.00000000000000E+0
   BmDistLoadG             10     217      Z      1     1.32000000000000E+0
1.32000000000000E+0      0.00000000000000E+0      0.00000000000000E+0
0.00000000000000E+0      0.00000000000000E+0
   BmDistLoadG             10     218      Z      1     2.64000000000000E+0
2.64000000000000E+0      0.00000000000000E+0      0.00000000000000E+0
0.00000000000000E+0      0.00000000000000E+0
   BmDistLoadG             10     219      Z      1     2.64000000000000E+0
2.64000000000000E+0      0.00000000000000E+0      0.00000000000000E+0
0.00000000000000E+0      0.00000000000000E+0
   BmDistLoadG             10     220      Z      1     2.64000000000000E+0
2.64000000000000E+0      0.00000000000000E+0      0.00000000000000E+0
0.00000000000000E+0      0.00000000000000E+0
   BmDistLoadG             10     221      Z      1     2.64000000000000E+0
2.64000000000000E+0      0.00000000000000E+0      0.00000000000000E+0
0.00000000000000E+0      0.00000000000000E+0
   BmDistLoadG             10     222      Z      1     2.64000000000000E+0
2.64000000000000E+0      0.00000000000000E+0      0.00000000000000E+0
0.00000000000000E+0      0.00000000000000E+0
   BmDistLoadG             10     223      Z      1     2.64000000000000E+0
2.64000000000000E+0      0.00000000000000E+0      0.00000000000000E+0
0.00000000000000E+0      0.00000000000000E+0
   BmDistLoadG             10     224      Z      1     2.64000000000000E+0
2.64000000000000E+0      0.00000000000000E+0      0.00000000000000E+0
0.00000000000000E+0      0.00000000000000E+0
   BmDistLoadG             10     225      Z      1     2.64000000000000E+0
2.64000000000000E+0      0.00000000000000E+0      0.00000000000000E+0
0.00000000000000E+0      0.00000000000000E+0
   BmDistLoadG             10     226      Z      1     2.64000000000000E+0
2.64000000000000E+0      0.00000000000000E+0      0.00000000000000E+0
0.00000000000000E+0      0.00000000000000E+0
   BmDistLoadG             10     227      Z      1     2.64000000000000E+0
2.64000000000000E+0      0.00000000000000E+0      0.00000000000000E+0
0.00000000000000E+0      0.00000000000000E+0
   BmDistLoadG             10     228      Z      1     2.64000000000000E+0
2.64000000000000E+0      0.00000000000000E+0      0.00000000000000E+0
0.00000000000000E+0      0.00000000000000E+0
   BmDistLoadG             10     229      Z      1     2.64000000000000E+0
2.64000000000000E+0      0.00000000000000E+0      0.00000000000000E+0
0.00000000000000E+0      0.00000000000000E+0
   BmDistLoadG             10     230      Z      1     2.64000000000000E+0
2.64000000000000E+0      0.00000000000000E+0      0.00000000000000E+0
0.00000000000000E+0      0.00000000000000E+0
   BmDistLoadG             10     231      Z      1     2.64000000000000E+0
2.64000000000000E+0      0.00000000000000E+0      0.00000000000000E+0
0.00000000000000E+0      0.00000000000000E+0
   BmDistLoadG             10     232      Z      1     2.64000000000000E+0
2.64000000000000E+0      0.00000000000000E+0      0.00000000000000E+0
```

```
0.00000000000000E+0      0.00000000000000E+0
   BmDistLoadG             10      233       Z        1      2.64000000000000E+0
2.64000000000000E+0      0.00000000000000E+0      0.00000000000000E+0
0.00000000000000E+0      0.00000000000000E+0
   BmDistLoadG             10      234       Z        1      2.64000000000000E+0
2.64000000000000E+0      0.00000000000000E+0      0.00000000000000E+0
0.00000000000000E+0      0.00000000000000E+0
   BmDistLoadG             10      235       Z        1      2.64000000000000E+0
2.64000000000000E+0      0.00000000000000E+0      0.00000000000000E+0
0.00000000000000E+0      0.00000000000000E+0
   BmDistLoadG             10      236       Z        1      2.64000000000000E+0
2.64000000000000E+0      0.00000000000000E+0      0.00000000000000E+0
0.00000000000000E+0      0.00000000000000E+0
   BmDistLoadG             10      237       Z        1      2.64000000000000E+0
2.64000000000000E+0      0.00000000000000E+0      0.00000000000000E+0
0.00000000000000E+0      0.00000000000000E+0
   BmDistLoadG             10      238       Z        1      2.64000000000000E+0
2.64000000000000E+0      0.00000000000000E+0      0.00000000000000E+0
0.00000000000000E+0      0.00000000000000E+0
   BmDistLoadG             10      239       Z        1      2.64000000000000E+0
2.64000000000000E+0      0.00000000000000E+0      0.00000000000000E+0
0.00000000000000E+0      0.00000000000000E+0
   BmDistLoadG             10      240       Z        1      2.64000000000000E+0
2.64000000000000E+0      0.00000000000000E+0      0.00000000000000E+0
0.00000000000000E+0      0.00000000000000E+0
   BmDistLoadG             10      241       Z        1      2.64000000000000E+0
2.64000000000000E+0      0.00000000000000E+0      0.00000000000000E+0
0.00000000000000E+0      0.00000000000000E+0
   BmDistLoadG             10      242       Z        1      2.64000000000000E+0
2.64000000000000E+0      0.00000000000000E+0      0.00000000000000E+0
0.00000000000000E+0      0.00000000000000E+0
   BmDistLoadG             10      243       Z        1      2.64000000000000E+0
2.64000000000000E+0      0.00000000000000E+0      0.00000000000000E+0
0.00000000000000E+0      0.00000000000000E+0
   BmDistLoadG             10      244       Z        1      2.64000000000000E+0
2.64000000000000E+0      0.00000000000000E+0      0.00000000000000E+0
0.00000000000000E+0      0.00000000000000E+0
   BmDistLoadG             10      245       Z        1      2.64000000000000E+0
2.64000000000000E+0      0.00000000000000E+0      0.00000000000000E+0
0.00000000000000E+0      0.00000000000000E+0
   BmDistLoadG             10      246       Z        1      2.64000000000000E+0
2.64000000000000E+0      0.00000000000000E+0      0.00000000000000E+0
0.00000000000000E+0      0.00000000000000E+0
   BmDistLoadG             10      247       Z        1      2.64000000000000E+0
2.64000000000000E+0      0.00000000000000E+0      0.00000000000000E+0
0.00000000000000E+0      0.00000000000000E+0
   BmDistLoadG             10      248       Z        1      2.64000000000000E+0
2.64000000000000E+0      0.00000000000000E+0      0.00000000000000E+0
0.00000000000000E+0      0.00000000000000E+0
   BmDistLoadG             10      249       Z        1      2.64000000000000E+0
2.64000000000000E+0      0.00000000000000E+0      0.00000000000000E+0
0.00000000000000E+0      0.00000000000000E+0
   BmDistLoadG             10      250       Z        1      2.64000000000000E+0
2.64000000000000E+0      0.00000000000000E+0      0.00000000000000E+0
```

```
0.00000000000000E+0      0.00000000000000E+0
   BmDistLoadG             10     251      Z      1     2.64000000000000E+0
2.64000000000000E+0      0.00000000000000E+0      0.00000000000000E+0
0.00000000000000E+0      0.00000000000000E+0
   BmDistLoadG             10     252      Z      1     2.64000000000000E+0
2.64000000000000E+0      0.00000000000000E+0      0.00000000000000E+0
0.00000000000000E+0      0.00000000000000E+0
   BmDistLoadG             10     253      Z      1     2.64000000000000E+0
2.64000000000000E+0      0.00000000000000E+0      0.00000000000000E+0
0.00000000000000E+0      0.00000000000000E+0
   BmDistLoadG             10     254      Z      1     2.64000000000000E+0
2.64000000000000E+0      0.00000000000000E+0      0.00000000000000E+0
0.00000000000000E+0      0.00000000000000E+0
   BmDistLoadG             10     255      Z      1     2.64000000000000E+0
2.64000000000000E+0      0.00000000000000E+0      0.00000000000000E+0
0.00000000000000E+0      0.00000000000000E+0
   BmDistLoadG             10     256      Z      1     2.64000000000000E+0
2.64000000000000E+0      0.00000000000000E+0      0.00000000000000E+0
0.00000000000000E+0      0.00000000000000E+0
   BmDistLoadG             10     257      Z      1     2.64000000000000E+0
2.64000000000000E+0      0.00000000000000E+0      0.00000000000000E+0
0.00000000000000E+0      0.00000000000000E+0
   BmDistLoadG             10     258      Z      1     2.64000000000000E+0
2.64000000000000E+0      0.00000000000000E+0      0.00000000000000E+0
0.00000000000000E+0      0.00000000000000E+0
   BmDistLoadG             10     259      Z      1     2.64000000000000E+0
2.64000000000000E+0      0.00000000000000E+0      0.00000000000000E+0
0.00000000000000E+0      0.00000000000000E+0
   BmDistLoadG             10     260      Z      1     2.64000000000000E+0
2.64000000000000E+0      0.00000000000000E+0      0.00000000000000E+0
0.00000000000000E+0      0.00000000000000E+0
   BmDistLoadG             10     261      Z      1     2.64000000000000E+0
2.64000000000000E+0      0.00000000000000E+0      0.00000000000000E+0
0.00000000000000E+0      0.00000000000000E+0
   BmDistLoadG             10     262      Z      1     2.64000000000000E+0
2.64000000000000E+0      0.00000000000000E+0      0.00000000000000E+0
0.00000000000000E+0      0.00000000000000E+0
   BmDistLoadG             10     263      Z      1     2.64000000000000E+0
2.64000000000000E+0      0.00000000000000E+0      0.00000000000000E+0
0.00000000000000E+0      0.00000000000000E+0
   BmDistLoadG             10     264      Z      1     2.64000000000000E+0
2.64000000000000E+0      0.00000000000000E+0      0.00000000000000E+0
0.00000000000000E+0      0.00000000000000E+0
   BmDistLoadG             10     265      Z      1     2.64000000000000E+0
2.64000000000000E+0      0.00000000000000E+0      0.00000000000000E+0
0.00000000000000E+0      0.00000000000000E+0
   BmDistLoadG             10     266      Z      1     2.64000000000000E+0
2.64000000000000E+0      0.00000000000000E+0      0.00000000000000E+0
0.00000000000000E+0      0.00000000000000E+0
   BmDistLoadG             10     267      Z      1     2.64000000000000E+0
2.64000000000000E+0      0.00000000000000E+0      0.00000000000000E+0
0.00000000000000E+0      0.00000000000000E+0
   BmDistLoadG             10     268      Z      1     2.64000000000000E+0
2.64000000000000E+0      0.00000000000000E+0      0.00000000000000E+0
```

```
0.00000000000000E+0      0.00000000000000E+0
   BmDistLoadG             10     269      Z      1     2.64000000000000E+0
2.64000000000000E+0      0.00000000000000E+0      0.00000000000000E+0
0.00000000000000E+0      0.00000000000000E+0
   BmDistLoadG             10     270      Z      1     2.64000000000000E+0
2.64000000000000E+0      0.00000000000000E+0      0.00000000000000E+0
0.00000000000000E+0      0.00000000000000E+0
   BmDistLoadG             10     271      Z      1     2.64000000000000E+0
2.64000000000000E+0      0.00000000000000E+0      0.00000000000000E+0
0.00000000000000E+0      0.00000000000000E+0
   BmDistLoadG             10     272      Z      1     2.64000000000000E+0
2.64000000000000E+0      0.00000000000000E+0      0.00000000000000E+0
0.00000000000000E+0      0.00000000000000E+0
   BmDistLoadG             10     273      Z      1     2.64000000000000E+0
2.64000000000000E+0      0.00000000000000E+0      0.00000000000000E+0
0.00000000000000E+0      0.00000000000000E+0
   BmDistLoadG             10     274      Z      1     2.64000000000000E+0
2.64000000000000E+0      0.00000000000000E+0      0.00000000000000E+0
0.00000000000000E+0      0.00000000000000E+0
   BmDistLoadG             10     275      Z      1     2.64000000000000E+0
2.64000000000000E+0      0.00000000000000E+0      0.00000000000000E+0
0.00000000000000E+0      0.00000000000000E+0
   BmDistLoadG             10     276      Z      1     2.64000000000000E+0
2.64000000000000E+0      0.00000000000000E+0      0.00000000000000E+0
0.00000000000000E+0      0.00000000000000E+0
   BmDistLoadG             10     277      Z      1     2.64000000000000E+0
2.64000000000000E+0      0.00000000000000E+0      0.00000000000000E+0
0.00000000000000E+0      0.00000000000000E+0
   BmDistLoadG             10     278      Z      1     2.64000000000000E+0
2.64000000000000E+0      0.00000000000000E+0      0.00000000000000E+0
0.00000000000000E+0      0.00000000000000E+0
   BmDistLoadG             10     279      Z      1     2.64000000000000E+0
2.64000000000000E+0      0.00000000000000E+0      0.00000000000000E+0
0.00000000000000E+0      0.00000000000000E+0
   BmDistLoadG             10     280      Z      1     2.64000000000000E+0
2.64000000000000E+0      0.00000000000000E+0      0.00000000000000E+0
0.00000000000000E+0      0.00000000000000E+0
   BmDistLoadG             10     281      Z      1     2.64000000000000E+0
2.64000000000000E+0      0.00000000000000E+0      0.00000000000000E+0
0.00000000000000E+0      0.00000000000000E+0
   BmDistLoadG             10     282      Z      1     2.64000000000000E+0
2.64000000000000E+0      0.00000000000000E+0      0.00000000000000E+0
0.00000000000000E+0      0.00000000000000E+0
   BmDistLoadG             10     283      Z      1     2.64000000000000E+0
2.64000000000000E+0      0.00000000000000E+0      0.00000000000000E+0
0.00000000000000E+0      0.00000000000000E+0
   BmDistLoadG             10     284      Z      1     2.64000000000000E+0
2.64000000000000E+0      0.00000000000000E+0      0.00000000000000E+0
0.00000000000000E+0      0.00000000000000E+0
   BmDistLoadG             10     285      Z      1     2.64000000000000E+0
2.64000000000000E+0      0.00000000000000E+0      0.00000000000000E+0
0.00000000000000E+0      0.00000000000000E+0
   BmDistLoadG             10     286      Z      1     2.64000000000000E+0
2.64000000000000E+0      0.00000000000000E+0      0.00000000000000E+0
```

```
0.00000000000000E+0      0.00000000000000E+0
   BmDistLoadG             10     287       Z       1     2.64000000000000E+0
2.64000000000000E+0      0.00000000000000E+0      0.00000000000000E+0
0.00000000000000E+0      0.00000000000000E+0
   BmDistLoadG             10     288       Z       1     2.64000000000000E+0
2.64000000000000E+0      0.00000000000000E+0      0.00000000000000E+0
0.00000000000000E+0      0.00000000000000E+0
   BmDistLoadG             10     289       Z       1     2.64000000000000E+0
2.64000000000000E+0      0.00000000000000E+0      0.00000000000000E+0
0.00000000000000E+0      0.00000000000000E+0
   BmDistLoadG             10     290       Z       1     2.64000000000000E+0
2.64000000000000E+0      0.00000000000000E+0      0.00000000000000E+0
0.00000000000000E+0      0.00000000000000E+0
   BmDistLoadG             10     291       Z       1     2.64000000000000E+0
2.64000000000000E+0      0.00000000000000E+0      0.00000000000000E+0
0.00000000000000E+0      0.00000000000000E+0
   BmDistLoadG             10     292       Z       1     2.64000000000000E+0
2.64000000000000E+0      0.00000000000000E+0      0.00000000000000E+0
0.00000000000000E+0      0.00000000000000E+0
   BmDistLoadG             10     293       Z       1     2.64000000000000E+0
2.64000000000000E+0      0.00000000000000E+0      0.00000000000000E+0
0.00000000000000E+0      0.00000000000000E+0
   BmDistLoadG             10     294       Z       1     2.64000000000000E+0
2.64000000000000E+0      0.00000000000000E+0      0.00000000000000E+0
0.00000000000000E+0      0.00000000000000E+0
   BmDistLoadG             10     295       Z       1     2.64000000000000E+0
2.64000000000000E+0      0.00000000000000E+0      0.00000000000000E+0
0.00000000000000E+0      0.00000000000000E+0
   BmDistLoadG             10     296       Z       1     2.64000000000000E+0
2.64000000000000E+0      0.00000000000000E+0      0.00000000000000E+0
0.00000000000000E+0      0.00000000000000E+0
   BmDistLoadG             10     297       Z       1     2.64000000000000E+0
2.64000000000000E+0      0.00000000000000E+0      0.00000000000000E+0
0.00000000000000E+0      0.00000000000000E+0
   BmDistLoadG             10     298       Z       1     2.64000000000000E+0
2.64000000000000E+0      0.00000000000000E+0      0.00000000000000E+0
0.00000000000000E+0      0.00000000000000E+0
   BmDistLoadG             10     299       Z       1     2.64000000000000E+0
2.64000000000000E+0      0.00000000000000E+0      0.00000000000000E+0
0.00000000000000E+0      0.00000000000000E+0
   BmDistLoadG             10     300       Z       1     2.64000000000000E+0
2.64000000000000E+0      0.00000000000000E+0      0.00000000000000E+0
0.00000000000000E+0      0.00000000000000E+0
   BmDistLoadG             10     301       Z       1     2.64000000000000E+0
2.64000000000000E+0      0.00000000000000E+0      0.00000000000000E+0
0.00000000000000E+0      0.00000000000000E+0
   BmDistLoadG             10     302       Z       1     2.64000000000000E+0
2.64000000000000E+0      0.00000000000000E+0      0.00000000000000E+0
0.00000000000000E+0      0.00000000000000E+0
   BmDistLoadG             10     303       Z       1     2.64000000000000E+0
2.64000000000000E+0      0.00000000000000E+0      0.00000000000000E+0
0.00000000000000E+0      0.00000000000000E+0
   BmDistLoadG             10     304       Z       1     2.64000000000000E+0
2.64000000000000E+0      0.00000000000000E+0      0.00000000000000E+0
```

```
0.00000000000000E+0       0.00000000000000E+0
   BmDistLoadG              10      305       Z       1      2.64000000000000E+0
2.64000000000000E+0       0.00000000000000E+0       0.00000000000000E+0
0.00000000000000E+0       0.00000000000000E+0
   BmDistLoadG              10      306       Z       1      2.64000000000000E+0
2.64000000000000E+0       0.00000000000000E+0       0.00000000000000E+0
0.00000000000000E+0       0.00000000000000E+0
   BmDistLoadG              10      307       Z       1      2.64000000000000E+0
2.64000000000000E+0       0.00000000000000E+0       0.00000000000000E+0
0.00000000000000E+0       0.00000000000000E+0
   BmDistLoadG              10      308       Z       1      2.64000000000000E+0
2.64000000000000E+0       0.00000000000000E+0       0.00000000000000E+0
0.00000000000000E+0       0.00000000000000E+0
   BmDistLoadG              10      309       Z       1      2.64000000000000E+0
2.64000000000000E+0       0.00000000000000E+0       0.00000000000000E+0
0.00000000000000E+0       0.00000000000000E+0
   BmDistLoadG              10      310       Z       1      2.64000000000000E+0
2.64000000000000E+0       0.00000000000000E+0       0.00000000000000E+0
0.00000000000000E+0       0.00000000000000E+0
   BmDistLoadG              10      311       Z       1      2.64000000000000E+0
2.64000000000000E+0       0.00000000000000E+0       0.00000000000000E+0
0.00000000000000E+0       0.00000000000000E+0
   BmDistLoadG              10      312       Z       1      2.64000000000000E+0
2.64000000000000E+0       0.00000000000000E+0       0.00000000000000E+0
0.00000000000000E+0       0.00000000000000E+0
   BmDistLoadG              10      313       Z       1      2.64000000000000E+0
2.64000000000000E+0       0.00000000000000E+0       0.00000000000000E+0
0.00000000000000E+0       0.00000000000000E+0
   BmDistLoadG              10      314       Z       1      2.64000000000000E+0
2.64000000000000E+0       0.00000000000000E+0       0.00000000000000E+0
0.00000000000000E+0       0.00000000000000E+0
   BmDistLoadG              10      315       Z       1      2.64000000000000E+0
2.64000000000000E+0       0.00000000000000E+0       0.00000000000000E+0
0.00000000000000E+0       0.00000000000000E+0
   BmDistLoadG              10      316       Z       1      2.64000000000000E+0
2.64000000000000E+0       0.00000000000000E+0       0.00000000000000E+0
0.00000000000000E+0       0.00000000000000E+0
   BmDistLoadG              10      317       Z       1      2.64000000000000E+0
2.64000000000000E+0       0.00000000000000E+0       0.00000000000000E+0
0.00000000000000E+0       0.00000000000000E+0
   BmDistLoadG              10      318       Z       1      2.64000000000000E+0
2.64000000000000E+0       0.00000000000000E+0       0.00000000000000E+0
0.00000000000000E+0       0.00000000000000E+0
   BmDistLoadG              10      319       Z       1      2.64000000000000E+0
2.64000000000000E+0       0.00000000000000E+0       0.00000000000000E+0
0.00000000000000E+0       0.00000000000000E+0
   BmDistLoadG              10      320       Z       1      2.64000000000000E+0
2.64000000000000E+0       0.00000000000000E+0       0.00000000000000E+0
0.00000000000000E+0       0.00000000000000E+0
   BmDistLoadG              10      321       Z       1      2.64000000000000E+0
2.64000000000000E+0       0.00000000000000E+0       0.00000000000000E+0
0.00000000000000E+0       0.00000000000000E+0
   BmDistLoadG              10      322       Z       1      2.64000000000000E+0
2.64000000000000E+0       0.00000000000000E+0       0.00000000000000E+0
```

```
0.00000000000000E+0      0.00000000000000E+0
   BmDistLoadG             10     323      Z      1     2.64000000000000E+0
2.64000000000000E+0      0.00000000000000E+0      0.00000000000000E+0
0.00000000000000E+0      0.00000000000000E+0
   BmDistLoadG             10     324      Z      1     2.64000000000000E+0
2.64000000000000E+0      0.00000000000000E+0      0.00000000000000E+0
0.00000000000000E+0      0.00000000000000E+0
   BmDistLoadG             10     325      Z      1     2.64000000000000E+0
2.64000000000000E+0      0.00000000000000E+0      0.00000000000000E+0
0.00000000000000E+0      0.00000000000000E+0
   BmDistLoadG             10     326      Z      1     2.64000000000000E+0
2.64000000000000E+0      0.00000000000000E+0      0.00000000000000E+0
0.00000000000000E+0      0.00000000000000E+0
   BmDistLoadG             10     327      Z      1     2.64000000000000E+0
2.64000000000000E+0      0.00000000000000E+0      0.00000000000000E+0
0.00000000000000E+0      0.00000000000000E+0
   BmDistLoadG             10     328      Z      1     2.64000000000000E+0
2.64000000000000E+0      0.00000000000000E+0      0.00000000000000E+0
0.00000000000000E+0      0.00000000000000E+0
   BmDistLoadG             10     329      Z      1     2.64000000000000E+0
2.64000000000000E+0      0.00000000000000E+0      0.00000000000000E+0
0.00000000000000E+0      0.00000000000000E+0
   BmDistLoadG             10     330      Z      1     2.64000000000000E+0
2.64000000000000E+0      0.00000000000000E+0      0.00000000000000E+0
0.00000000000000E+0      0.00000000000000E+0
   BmDistLoadG             10     331      Z      1     2.64000000000000E+0
2.64000000000000E+0      0.00000000000000E+0      0.00000000000000E+0
0.00000000000000E+0      0.00000000000000E+0
   BmDistLoadG             10     332      Z      1     2.64000000000000E+0
2.64000000000000E+0      0.00000000000000E+0      0.00000000000000E+0
0.00000000000000E+0      0.00000000000000E+0
   BmDistLoadG             10     333      Z      1     2.64000000000000E+0
2.64000000000000E+0      0.00000000000000E+0      0.00000000000000E+0
0.00000000000000E+0      0.00000000000000E+0
   BmDistLoadG             10     334      Z      1     2.64000000000000E+0
2.64000000000000E+0      0.00000000000000E+0      0.00000000000000E+0
0.00000000000000E+0      0.00000000000000E+0
   BmDistLoadG             10     335      Z      1     2.64000000000000E+0
2.64000000000000E+0      0.00000000000000E+0      0.00000000000000E+0
0.00000000000000E+0      0.00000000000000E+0
   BmDistLoadG             10     336      Z      1     2.64000000000000E+0
2.64000000000000E+0      0.00000000000000E+0      0.00000000000000E+0
0.00000000000000E+0      0.00000000000000E+0
   BmDistLoadG             10     337      Z      1     2.64000000000000E+0
2.64000000000000E+0      0.00000000000000E+0      0.00000000000000E+0
0.00000000000000E+0      0.00000000000000E+0
   BmDistLoadG             10     338      Z      1     2.64000000000000E+0
2.64000000000000E+0      0.00000000000000E+0      0.00000000000000E+0
0.00000000000000E+0      0.00000000000000E+0
   BmDistLoadG             10     339      Z      1     2.64000000000000E+0
2.64000000000000E+0      0.00000000000000E+0      0.00000000000000E+0
0.00000000000000E+0      0.00000000000000E+0
   BmDistLoadG             10     340      Z      1     2.64000000000000E+0
2.64000000000000E+0      0.00000000000000E+0      0.00000000000000E+0
```

```
0.00000000000000E+0      0.00000000000000E+0
   BmDistLoadG             10     341       Z       1     2.64000000000000E+0
2.64000000000000E+0      0.00000000000000E+0      0.00000000000000E+0
0.00000000000000E+0      0.00000000000000E+0
   BmDistLoadG             10     342       Z       1     2.64000000000000E+0
2.64000000000000E+0      0.00000000000000E+0      0.00000000000000E+0
0.00000000000000E+0      0.00000000000000E+0
   BmDistLoadG             10     343       Z       1     2.64000000000000E+0
2.64000000000000E+0      0.00000000000000E+0      0.00000000000000E+0
0.00000000000000E+0      0.00000000000000E+0
   BmDistLoadG             10     344       Z       1     2.64000000000000E+0
2.64000000000000E+0      0.00000000000000E+0      0.00000000000000E+0
0.00000000000000E+0      0.00000000000000E+0
   BmDistLoadG             10     345       Z       1     2.64000000000000E+0
2.64000000000000E+0      0.00000000000000E+0      0.00000000000000E+0
0.00000000000000E+0      0.00000000000000E+0
   BmDistLoadG             10     346       Z       1     2.64000000000000E+0
2.64000000000000E+0      0.00000000000000E+0      0.00000000000000E+0
0.00000000000000E+0      0.00000000000000E+0
   BmDistLoadG             10     347       Z       1     2.64000000000000E+0
2.64000000000000E+0      0.00000000000000E+0      0.00000000000000E+0
0.00000000000000E+0      0.00000000000000E+0
   BmDistLoadG             10     348       Z       1     2.64000000000000E+0
2.64000000000000E+0      0.00000000000000E+0      0.00000000000000E+0
0.00000000000000E+0      0.00000000000000E+0
   BmDistLoadG             10     349       Z       1     2.64000000000000E+0
2.64000000000000E+0      0.00000000000000E+0      0.00000000000000E+0
0.00000000000000E+0      0.00000000000000E+0
   BmDistLoadG             10     350       Z       1     2.64000000000000E+0
2.64000000000000E+0      0.00000000000000E+0      0.00000000000000E+0
0.00000000000000E+0      0.00000000000000E+0
   BmDistLoadG             10     351       Z       1     2.64000000000000E+0
2.64000000000000E+0      0.00000000000000E+0      0.00000000000000E+0
0.00000000000000E+0      0.00000000000000E+0
   BmDistLoadG             10     352       Z       1     2.64000000000000E+0
2.64000000000000E+0      0.00000000000000E+0      0.00000000000000E+0
0.00000000000000E+0      0.00000000000000E+0
   BmDistLoadG             10     353       Z       1     2.64000000000000E+0
2.64000000000000E+0      0.00000000000000E+0      0.00000000000000E+0
0.00000000000000E+0      0.00000000000000E+0
   BmDistLoadG             10     354       Z       1     2.64000000000000E+0
2.64000000000000E+0      0.00000000000000E+0      0.00000000000000E+0
0.00000000000000E+0      0.00000000000000E+0
   BmDistLoadG             10     355       Z       1     2.64000000000000E+0
2.64000000000000E+0      0.00000000000000E+0      0.00000000000000E+0
0.00000000000000E+0      0.00000000000000E+0
   BmDistLoadG             10     356       Z       1     2.64000000000000E+0
2.64000000000000E+0      0.00000000000000E+0      0.00000000000000E+0
0.00000000000000E+0      0.00000000000000E+0
   BmDistLoadG             10     357       Z       1     2.64000000000000E+0
2.64000000000000E+0      0.00000000000000E+0      0.00000000000000E+0
0.00000000000000E+0      0.00000000000000E+0
   BmDistLoadG             10     358       Z       1     2.64000000000000E+0
2.64000000000000E+0      0.00000000000000E+0      0.00000000000000E+0
```

```
0.00000000000000E+0      0.00000000000000E+0
   BmDistLoadG             10     359      Z      1     2.64000000000000E+0
2.64000000000000E+0      0.00000000000000E+0      0.00000000000000E+0
0.00000000000000E+0      0.00000000000000E+0
   BmDistLoadG             10     360      Z      1     2.64000000000000E+0
2.64000000000000E+0      0.00000000000000E+0      0.00000000000000E+0
0.00000000000000E+0      0.00000000000000E+0
   BmDistLoadG             10     361      Z      1     2.64000000000000E+0
2.64000000000000E+0      0.00000000000000E+0      0.00000000000000E+0
0.00000000000000E+0      0.00000000000000E+0
   BmDistLoadG             10     362      Z      1     2.64000000000000E+0
2.64000000000000E+0      0.00000000000000E+0      0.00000000000000E+0
0.00000000000000E+0      0.00000000000000E+0
   BmDistLoadG             10     363      Z      1     2.64000000000000E+0
2.64000000000000E+0      0.00000000000000E+0      0.00000000000000E+0
0.00000000000000E+0      0.00000000000000E+0
   BmDistLoadG             10     364      Z      1     2.64000000000000E+0
2.64000000000000E+0      0.00000000000000E+0      0.00000000000000E+0
0.00000000000000E+0      0.00000000000000E+0
   BmDistLoadG             10     365      Z      1     2.64000000000000E+0
2.64000000000000E+0      0.00000000000000E+0      0.00000000000000E+0
0.00000000000000E+0      0.00000000000000E+0
   BmDistLoadG             10     366      Z      1     2.64000000000000E+0
2.64000000000000E+0      0.00000000000000E+0      0.00000000000000E+0
0.00000000000000E+0      0.00000000000000E+0
   BmDistLoadG             10     367      Z      1     2.64000000000000E+0
2.64000000000000E+0      0.00000000000000E+0      0.00000000000000E+0
0.00000000000000E+0      0.00000000000000E+0
   BmDistLoadG             10     368      Z      1     2.64000000000000E+0
2.64000000000000E+0      0.00000000000000E+0      0.00000000000000E+0
0.00000000000000E+0      0.00000000000000E+0
   BmDistLoadG             10     369      Z      1     2.64000000000000E+0
2.64000000000000E+0      0.00000000000000E+0      0.00000000000000E+0
0.00000000000000E+0      0.00000000000000E+0
   BmDistLoadG             10     370      Z      1     2.64000000000000E+0
2.64000000000000E+0      0.00000000000000E+0      0.00000000000000E+0
0.00000000000000E+0      0.00000000000000E+0
   BmDistLoadG             10     371      Z      1     2.64000000000000E+0
2.64000000000000E+0      0.00000000000000E+0      0.00000000000000E+0
0.00000000000000E+0      0.00000000000000E+0
   BmDistLoadG             10     372      Z      1     2.64000000000000E+0
2.64000000000000E+0      0.00000000000000E+0      0.00000000000000E+0
0.00000000000000E+0      0.00000000000000E+0
   BmDistLoadG             10     373      Z      1     2.64000000000000E+0
2.64000000000000E+0      0.00000000000000E+0      0.00000000000000E+0
0.00000000000000E+0      0.00000000000000E+0
   BmDistLoadG             10     374      Z      1     2.64000000000000E+0
2.64000000000000E+0      0.00000000000000E+0      0.00000000000000E+0
0.00000000000000E+0      0.00000000000000E+0
   BmDistLoadG             10     375      Z      1     2.64000000000000E+0
2.64000000000000E+0      0.00000000000000E+0      0.00000000000000E+0
0.00000000000000E+0      0.00000000000000E+0
   BmDistLoadG             10     376      Z      1     2.64000000000000E+0
2.64000000000000E+0      0.00000000000000E+0      0.00000000000000E+0
```

```
0.00000000000000E+0      0.00000000000000E+0
   BmDistLoadG             10      377       Z      1     2.64000000000000E+0
2.64000000000000E+0      0.00000000000000E+0      0.00000000000000E+0
0.00000000000000E+0      0.00000000000000E+0
   BmDistLoadG             10      378       Z      1     2.64000000000000E+0
2.64000000000000E+0      0.00000000000000E+0      0.00000000000000E+0
0.00000000000000E+0      0.00000000000000E+0
   BmDistLoadG             10      379       Z      1     2.64000000000000E+0
2.64000000000000E+0      0.00000000000000E+0      0.00000000000000E+0
0.00000000000000E+0      0.00000000000000E+0
   BmDistLoadG             10      380       Z      1     2.64000000000000E+0
2.64000000000000E+0      0.00000000000000E+0      0.00000000000000E+0
0.00000000000000E+0      0.00000000000000E+0
   BmDistLoadG             10      381       Z      1     2.64000000000000E+0
2.64000000000000E+0      0.00000000000000E+0      0.00000000000000E+0
0.00000000000000E+0      0.00000000000000E+0
   BmDistLoadG             10      382       Z      1     2.64000000000000E+0
2.64000000000000E+0      0.00000000000000E+0      0.00000000000000E+0
0.00000000000000E+0      0.00000000000000E+0
   BmDistLoadG             10      383       Z      1     2.64000000000000E+0
2.64000000000000E+0      0.00000000000000E+0      0.00000000000000E+0
0.00000000000000E+0      0.00000000000000E+0
   BmDistLoadG             10      384       Z      1     2.64000000000000E+0
2.64000000000000E+0      0.00000000000000E+0      0.00000000000000E+0
0.00000000000000E+0      0.00000000000000E+0
   BmDistLoadG             10      385       Z      1     2.64000000000000E+0
2.64000000000000E+0      0.00000000000000E+0      0.00000000000000E+0
0.00000000000000E+0      0.00000000000000E+0
   BmDistLoadG             10      386       Z      1     2.64000000000000E+0
2.64000000000000E+0      0.00000000000000E+0      0.00000000000000E+0
0.00000000000000E+0      0.00000000000000E+0
   BmDistLoadG             10      387       Z      1     2.64000000000000E+0
2.64000000000000E+0      0.00000000000000E+0      0.00000000000000E+0
0.00000000000000E+0      0.00000000000000E+0
   BmDistLoadG             10      388       Z      1     2.64000000000000E+0
2.64000000000000E+0      0.00000000000000E+0      0.00000000000000E+0
0.00000000000000E+0      0.00000000000000E+0
   BmDistLoadG             10      389       Z      1     2.64000000000000E+0
2.64000000000000E+0      0.00000000000000E+0      0.00000000000000E+0
0.00000000000000E+0      0.00000000000000E+0
   BmDistLoadG             10      390       Z      1     2.64000000000000E+0
2.64000000000000E+0      0.00000000000000E+0      0.00000000000000E+0
0.00000000000000E+0      0.00000000000000E+0
   BmDistLoadG             10      391       Z      1     2.64000000000000E+0
2.64000000000000E+0      0.00000000000000E+0      0.00000000000000E+0
0.00000000000000E+0      0.00000000000000E+0
   BmDistLoadG             10      392       Z      1     2.64000000000000E+0
2.64000000000000E+0      0.00000000000000E+0      0.00000000000000E+0
0.00000000000000E+0      0.00000000000000E+0
   BmDistLoadG             10      393       Z      1     2.64000000000000E+0
2.64000000000000E+0      0.00000000000000E+0      0.00000000000000E+0
0.00000000000000E+0      0.00000000000000E+0
   BmDistLoadG             10      394       Z      1     2.64000000000000E+0
2.64000000000000E+0      0.00000000000000E+0      0.00000000000000E+0
```

```
0.00000000000000E+0      0.00000000000000E+0
   BmDistLoadG             10     395       Z        1      2.64000000000000E+0
2.64000000000000E+0      0.00000000000000E+0      0.00000000000000E+0
0.00000000000000E+0      0.00000000000000E+0
   BmDistLoadG             10     396       Z        1      2.64000000000000E+0
2.64000000000000E+0      0.00000000000000E+0      0.00000000000000E+0
0.00000000000000E+0      0.00000000000000E+0
   BmDistLoadG             10     397       Z        1      2.64000000000000E+0
2.64000000000000E+0      0.00000000000000E+0      0.00000000000000E+0
0.00000000000000E+0      0.00000000000000E+0
   BmDistLoadG             10     398       Z        1      2.64000000000000E+0
2.64000000000000E+0      0.00000000000000E+0      0.00000000000000E+0
0.00000000000000E+0      0.00000000000000E+0
   BmDistLoadG             10     399       Z        1      2.64000000000000E+0
2.64000000000000E+0      0.00000000000000E+0      0.00000000000000E+0
0.00000000000000E+0      0.00000000000000E+0
   BmDistLoadG             10     400       Z        1      2.64000000000000E+0
2.64000000000000E+0      0.00000000000000E+0      0.00000000000000E+0
0.00000000000000E+0      0.00000000000000E+0
   BmDistLoadG             10     401       Z        1      2.64000000000000E+0
2.64000000000000E+0      0.00000000000000E+0      0.00000000000000E+0
0.00000000000000E+0      0.00000000000000E+0
   BmDistLoadG             10     402       Z        1      2.64000000000000E+0
2.64000000000000E+0      0.00000000000000E+0      0.00000000000000E+0
0.00000000000000E+0      0.00000000000000E+0
   BmDistLoadG             10     403       Z        1      2.64000000000000E+0
2.64000000000000E+0      0.00000000000000E+0      0.00000000000000E+0
0.00000000000000E+0      0.00000000000000E+0
   BmDistLoadG             10     404       Z        1      2.64000000000000E+0
2.64000000000000E+0      0.00000000000000E+0      0.00000000000000E+0
0.00000000000000E+0      0.00000000000000E+0
   BmDistLoadG             10     405       Z        1      2.64000000000000E+0
2.64000000000000E+0      0.00000000000000E+0      0.00000000000000E+0
0.00000000000000E+0      0.00000000000000E+0
   BmDistLoadG             10     406       Z        1      2.64000000000000E+0
2.64000000000000E+0      0.00000000000000E+0      0.00000000000000E+0
0.00000000000000E+0      0.00000000000000E+0
   BmDistLoadG             10     407       Z        1      2.64000000000000E+0
2.64000000000000E+0      0.00000000000000E+0      0.00000000000000E+0
0.00000000000000E+0      0.00000000000000E+0
   BmDistLoadG             10     408       Z        1      2.64000000000000E+0
2.64000000000000E+0      0.00000000000000E+0      0.00000000000000E+0
0.00000000000000E+0      0.00000000000000E+0
   BmDistLoadG             10     409       Z        1      2.64000000000000E+0
2.64000000000000E+0      0.00000000000000E+0      0.00000000000000E+0
0.00000000000000E+0      0.00000000000000E+0
   BmDistLoadG             10     410       Z        1      2.64000000000000E+0
2.64000000000000E+0      0.00000000000000E+0      0.00000000000000E+0
0.00000000000000E+0      0.00000000000000E+0
   BmDistLoadG             10     411       Z        1      2.64000000000000E+0
2.64000000000000E+0      0.00000000000000E+0      0.00000000000000E+0
0.00000000000000E+0      0.00000000000000E+0
   BmDistLoadG             10     412       Z        1      2.64000000000000E+0
2.64000000000000E+0      0.00000000000000E+0      0.00000000000000E+0
```

```
0.00000000000000E+0      0.00000000000000E+0
   BmDistLoadG             10     413      Z      1     2.64000000000000E+0
2.64000000000000E+0      0.00000000000000E+0      0.00000000000000E+0
0.00000000000000E+0      0.00000000000000E+0
   BmDistLoadG             10     414      Z      1     2.64000000000000E+0
2.64000000000000E+0      0.00000000000000E+0      0.00000000000000E+0
0.00000000000000E+0      0.00000000000000E+0
   BmDistLoadG             10     415      Z      1     2.64000000000000E+0
2.64000000000000E+0      0.00000000000000E+0      0.00000000000000E+0
0.00000000000000E+0      0.00000000000000E+0
   BmDistLoadG             10     416      Z      1     2.64000000000000E+0
2.64000000000000E+0      0.00000000000000E+0      0.00000000000000E+0
0.00000000000000E+0      0.00000000000000E+0
   BmDistLoadG             10     417      Z      1     2.64000000000000E+0
2.64000000000000E+0      0.00000000000000E+0      0.00000000000000E+0
0.00000000000000E+0      0.00000000000000E+0
   BmDistLoadG             10     418      Z      1     2.64000000000000E+0
2.64000000000000E+0      0.00000000000000E+0      0.00000000000000E+0
0.00000000000000E+0      0.00000000000000E+0
   BmDistLoadG             10     419      Z      1     2.64000000000000E+0
2.64000000000000E+0      0.00000000000000E+0      0.00000000000000E+0
0.00000000000000E+0      0.00000000000000E+0
   BmDistLoadG             10     420      Z      1     2.64000000000000E+0
2.64000000000000E+0      0.00000000000000E+0      0.00000000000000E+0
0.00000000000000E+0      0.00000000000000E+0
   BmDistLoadG             10     421      Z      1     2.64000000000000E+0
2.64000000000000E+0      0.00000000000000E+0      0.00000000000000E+0
0.00000000000000E+0      0.00000000000000E+0
   BmDistLoadG             10     422      Z      1     2.64000000000000E+0
2.64000000000000E+0      0.00000000000000E+0      0.00000000000000E+0
0.00000000000000E+0      0.00000000000000E+0
   BmDistLoadG             10     423      Z      1     2.64000000000000E+0
2.64000000000000E+0      0.00000000000000E+0      0.00000000000000E+0
0.00000000000000E+0      0.00000000000000E+0
   BmDistLoadG             10     424      Z      1     2.64000000000000E+0
2.64000000000000E+0      0.00000000000000E+0      0.00000000000000E+0
0.00000000000000E+0      0.00000000000000E+0
   BmDistLoadG             10     425      Z      1     2.64000000000000E+0
2.64000000000000E+0      0.00000000000000E+0      0.00000000000000E+0
0.00000000000000E+0      0.00000000000000E+0
   BmDistLoadG             10     426      Z      1     2.64000000000000E+0
2.64000000000000E+0      0.00000000000000E+0      0.00000000000000E+0
0.00000000000000E+0      0.00000000000000E+0
   BmDistLoadG             10     427      Z      1     2.64000000000000E+0
2.64000000000000E+0      0.00000000000000E+0      0.00000000000000E+0
0.00000000000000E+0      0.00000000000000E+0
   BmDistLoadG             10     428      Z      1     2.64000000000000E+0
2.64000000000000E+0      0.00000000000000E+0      0.00000000000000E+0
0.00000000000000E+0      0.00000000000000E+0
   BmDistLoadG             10     429      Z      1     2.64000000000000E+0
2.64000000000000E+0      0.00000000000000E+0      0.00000000000000E+0
0.00000000000000E+0      0.00000000000000E+0
   BmDistLoadG             10     430      Z      1     2.64000000000000E+0
2.64000000000000E+0      0.00000000000000E+0      0.00000000000000E+0
```

```
0.00000000000000E+0      0.00000000000000E+0
   BmDistLoadG             10     431       Z       1      2.64000000000000E+0
2.64000000000000E+0      0.00000000000000E+0      0.00000000000000E+0
0.00000000000000E+0      0.00000000000000E+0
   BmDistLoadG             10     432       Z       1      2.64000000000000E+0
2.64000000000000E+0      0.00000000000000E+0      0.00000000000000E+0
0.00000000000000E+0      0.00000000000000E+0
   BmDistLoadG             10     433       Z       1      2.64000000000000E+0
2.64000000000000E+0      0.00000000000000E+0      0.00000000000000E+0
0.00000000000000E+0      0.00000000000000E+0
   BmDistLoadG             10     434       Y       1    -1.20000000000000E+0
-1.20000000000000E+0      0.00000000000000E+0      0.00000000000000E+0
0.00000000000000E+0      0.00000000000000E+0
   BmDistLoadG             10     435       Y       1    -1.20000000000000E+0
-1.20000000000000E+0      0.00000000000000E+0      0.00000000000000E+0
0.00000000000000E+0      0.00000000000000E+0
   BmDistLoadG             10     436       Y       1    -1.20000000000000E+0
-1.20000000000000E+0      0.00000000000000E+0      0.00000000000000E+0
0.00000000000000E+0      0.00000000000000E+0
   BmDistLoadG             10     437       Y       1    -1.20000000000000E+0
-1.20000000000000E+0      0.00000000000000E+0      0.00000000000000E+0
0.00000000000000E+0      0.00000000000000E+0
   BmDistLoadG             10     438       Y       1    -1.20000000000000E+0
-1.20000000000000E+0      0.00000000000000E+0      0.00000000000000E+0
0.00000000000000E+0      0.00000000000000E+0
   BmDistLoadG             10     649       Z       1      1.32000000000000E+0
1.32000000000000E+0      0.00000000000000E+0      0.00000000000000E+0
0.00000000000000E+0      0.00000000000000E+0
   BmDistLoadG             10     650       Z       1      1.32000000000000E+0
1.32000000000000E+0      0.00000000000000E+0      0.00000000000000E+0
0.00000000000000E+0      0.00000000000000E+0
   BmDistLoadG             10     651       Z       1      1.32000000000000E+0
1.32000000000000E+0      0.00000000000000E+0      0.00000000000000E+0
0.00000000000000E+0      0.00000000000000E+0
   BmDistLoadG             10     652       Z       1      1.32000000000000E+0
1.32000000000000E+0      0.00000000000000E+0      0.00000000000000E+0
0.00000000000000E+0      0.00000000000000E+0
   BmDistLoadG             10     653       Z       1      2.64000000000000E+0
2.64000000000000E+0      0.00000000000000E+0      0.00000000000000E+0
0.00000000000000E+0      0.00000000000000E+0
   BmDistLoadG             10     654       Z       1      2.64000000000000E+0
2.64000000000000E+0      0.00000000000000E+0      0.00000000000000E+0
0.00000000000000E+0      0.00000000000000E+0
   BmDistLoadG             10     655       Z       1      2.64000000000000E+0
2.64000000000000E+0      0.00000000000000E+0      0.00000000000000E+0
0.00000000000000E+0      0.00000000000000E+0
   BmDistLoadG             10     656       Z       1      2.64000000000000E+0
2.64000000000000E+0      0.00000000000000E+0      0.00000000000000E+0
0.00000000000000E+0      0.00000000000000E+0
   BmDistLoadG             10     657       Z       1      2.64000000000000E+0
2.64000000000000E+0      0.00000000000000E+0      0.00000000000000E+0
0.00000000000000E+0      0.00000000000000E+0
   BmDistLoadG             10     658       Z       1      2.64000000000000E+0
2.64000000000000E+0      0.00000000000000E+0      0.00000000000000E+0
```

```
0.00000000000000E+0      0.00000000000000E+0
   BmDistLoadG             10     659      Z      1     2.64000000000000E+0
2.64000000000000E+0      0.00000000000000E+0      0.00000000000000E+0
0.00000000000000E+0      0.00000000000000E+0
   BmDistLoadG             10     660      Z      1     2.64000000000000E+0
2.64000000000000E+0      0.00000000000000E+0      0.00000000000000E+0
0.00000000000000E+0      0.00000000000000E+0
   BmDistLoadG             10     661      Z      1     2.64000000000000E+0
2.64000000000000E+0      0.00000000000000E+0      0.00000000000000E+0
0.00000000000000E+0      0.00000000000000E+0
   BmDistLoadG             10     662      Z      1     2.64000000000000E+0
2.64000000000000E+0      0.00000000000000E+0      0.00000000000000E+0
0.00000000000000E+0      0.00000000000000E+0
   BmDistLoadG             10     663      Z      1     2.64000000000000E+0
2.64000000000000E+0      0.00000000000000E+0      0.00000000000000E+0
0.00000000000000E+0      0.00000000000000E+0
   BmDistLoadG             10     664      Z      1     2.64000000000000E+0
2.64000000000000E+0      0.00000000000000E+0      0.00000000000000E+0
0.00000000000000E+0      0.00000000000000E+0
   BmDistLoadG             10     665      Z      1     2.64000000000000E+0
2.64000000000000E+0      0.00000000000000E+0      0.00000000000000E+0
0.00000000000000E+0      0.00000000000000E+0
   BmDistLoadG             10     666      Z      1     2.64000000000000E+0
2.64000000000000E+0      0.00000000000000E+0      0.00000000000000E+0
0.00000000000000E+0      0.00000000000000E+0
   BmDistLoadG             10     667      Z      1     2.64000000000000E+0
2.64000000000000E+0      0.00000000000000E+0      0.00000000000000E+0
0.00000000000000E+0      0.00000000000000E+0
   BmDistLoadG             10     668      Z      1     2.64000000000000E+0
2.64000000000000E+0      0.00000000000000E+0      0.00000000000000E+0
0.00000000000000E+0      0.00000000000000E+0

/ ____________________________________________________________________________
/ NODE TEMPERATURES
/ T00 - DTu = +25°C
   NdTemp                  11       1      Fixed        0
2.50000000000000E+1
   NdTemp                  11       2      Fixed        0
2.50000000000000E+1
   NdTemp                  11       3      Fixed        0
2.50000000000000E+1
   NdTemp                  11       4      Fixed        0
2.50000000000000E+1
   NdTemp                  11       5      Fixed        0
2.50000000000000E+1
   NdTemp                  11       6      Fixed        0
2.50000000000000E+1
   NdTemp                  11       7      Fixed        0
2.50000000000000E+1
   NdTemp                  11       8      Fixed        0
2.50000000000000E+1
   NdTemp                  11       9      Fixed        0
2.50000000000000E+1
   NdTemp                  11      10      Fixed        0
```

2.50000000000000E+1
NdTemp 11 11 Fixed 0
2.50000000000000E+1
NdTemp 11 12 Fixed 0
2.50000000000000E+1
NdTemp 11 13 Fixed 0
2.50000000000000E+1
NdTemp 11 14 Fixed 0
2.50000000000000E+1
NdTemp 11 15 Fixed 0
2.50000000000000E+1
NdTemp 11 16 Fixed 0
2.50000000000000E+1
NdTemp 11 17 Fixed 0
2.50000000000000E+1
NdTemp 11 18 Fixed 0
2.50000000000000E+1
NdTemp 11 19 Fixed 0
2.50000000000000E+1
NdTemp 11 20 Fixed 0
2.50000000000000E+1
NdTemp 11 21 Fixed 0
2.50000000000000E+1
NdTemp 11 22 Fixed 0
2.50000000000000E+1
NdTemp 11 23 Fixed 0
2.50000000000000E+1
NdTemp 11 24 Fixed 0
2.50000000000000E+1
NdTemp 11 25 Fixed 0
2.50000000000000E+1
NdTemp 11 26 Fixed 0
2.50000000000000E+1
NdTemp 11 27 Fixed 0
2.50000000000000E+1
NdTemp 11 28 Fixed 0
2.50000000000000E+1
NdTemp 11 29 Fixed 0
2.50000000000000E+1
NdTemp 11 30 Fixed 0
2.50000000000000E+1
NdTemp 11 31 Fixed 0
2.50000000000000E+1
NdTemp 11 32 Fixed 0
2.50000000000000E+1
NdTemp 11 33 Fixed 0
2.50000000000000E+1
NdTemp 11 34 Fixed 0
2.50000000000000E+1
NdTemp 11 35 Fixed 0
2.50000000000000E+1
NdTemp 11 36 Fixed 0
2.50000000000000E+1
NdTemp 11 37 Fixed 0

2.50000000000000E+1
NdTemp 11 38 Fixed 0
2.50000000000000E+1
NdTemp 11 39 Fixed 0
2.50000000000000E+1
NdTemp 11 40 Fixed 0
2.50000000000000E+1
NdTemp 11 41 Fixed 0
2.50000000000000E+1
NdTemp 11 42 Fixed 0
2.50000000000000E+1
NdTemp 11 43 Fixed 0
2.50000000000000E+1
NdTemp 11 44 Fixed 0
2.50000000000000E+1
NdTemp 11 45 Fixed 0
2.50000000000000E+1
NdTemp 11 46 Fixed 0
2.50000000000000E+1
NdTemp 11 47 Fixed 0
2.50000000000000E+1
NdTemp 11 48 Fixed 0
2.50000000000000E+1
NdTemp 11 49 Fixed 0
2.50000000000000E+1
NdTemp 11 50 Fixed 0
2.50000000000000E+1
NdTemp 11 51 Fixed 0
2.50000000000000E+1
NdTemp 11 52 Fixed 0
2.50000000000000E+1
NdTemp 11 53 Fixed 0
2.50000000000000E+1
NdTemp 11 54 Fixed 0
2.50000000000000E+1
NdTemp 11 55 Fixed 0
2.50000000000000E+1
NdTemp 11 56 Fixed 0
2.50000000000000E+1
NdTemp 11 57 Fixed 0
2.50000000000000E+1
NdTemp 11 58 Fixed 0
2.50000000000000E+1
NdTemp 11 59 Fixed 0
2.50000000000000E+1
NdTemp 11 60 Fixed 0
2.50000000000000E+1
NdTemp 11 61 Fixed 0
2.50000000000000E+1
NdTemp 11 62 Fixed 0
2.50000000000000E+1
NdTemp 11 63 Fixed 0
2.50000000000000E+1
NdTemp 11 64 Fixed 0

2.50000000000000E+1				
NdTemp	11	65	Fixed	0
2.50000000000000E+1				
NdTemp	11	66	Fixed	0
2.50000000000000E+1				
NdTemp	11	67	Fixed	0
2.50000000000000E+1				
NdTemp	11	68	Fixed	0
2.50000000000000E+1				
NdTemp	11	69	Fixed	0
2.50000000000000E+1				
NdTemp	11	70	Fixed	0
2.50000000000000E+1				
NdTemp	11	71	Fixed	0
2.50000000000000E+1				
NdTemp	11	72	Fixed	0
2.50000000000000E+1				
NdTemp	11	73	Fixed	0
2.50000000000000E+1				
NdTemp	11	74	Fixed	0
2.50000000000000E+1				
NdTemp	11	75	Fixed	0
2.50000000000000E+1				
NdTemp	11	76	Fixed	0
2.50000000000000E+1				
NdTemp	11	77	Fixed	0
2.50000000000000E+1				
NdTemp	11	78	Fixed	0
2.50000000000000E+1				
NdTemp	11	79	Fixed	0
2.50000000000000E+1				
NdTemp	11	80	Fixed	0
2.50000000000000E+1				
NdTemp	11	81	Fixed	0
2.50000000000000E+1				
NdTemp	11	82	Fixed	0
2.50000000000000E+1				
NdTemp	11	83	Fixed	0
2.50000000000000E+1				
NdTemp	11	84	Fixed	0
2.50000000000000E+1				
NdTemp	11	85	Fixed	0
2.50000000000000E+1				
NdTemp	11	86	Fixed	0
2.50000000000000E+1				
NdTemp	11	87	Fixed	0
2.50000000000000E+1				
NdTemp	11	88	Fixed	0
2.50000000000000E+1				
NdTemp	11	89	Fixed	0
2.50000000000000E+1				
NdTemp	11	90	Fixed	0
2.50000000000000E+1				
NdTemp	11	91	Fixed	0

2.50000000000000E+1
NdTemp 11 92 Fixed 0
2.50000000000000E+1
NdTemp 11 93 Fixed 0
2.50000000000000E+1
NdTemp 11 94 Fixed 0
2.50000000000000E+1
NdTemp 11 95 Fixed 0
2.50000000000000E+1
NdTemp 11 96 Fixed 0
2.50000000000000E+1
NdTemp 11 97 Fixed 0
2.50000000000000E+1
NdTemp 11 98 Fixed 0
2.50000000000000E+1
NdTemp 11 99 Fixed 0
2.50000000000000E+1
NdTemp 11 100 Fixed 0
2.50000000000000E+1
NdTemp 11 101 Fixed 0
2.50000000000000E+1
NdTemp 11 102 Fixed 0
2.50000000000000E+1
NdTemp 11 103 Fixed 0
2.50000000000000E+1
NdTemp 11 104 Fixed 0
2.50000000000000E+1
NdTemp 11 105 Fixed 0
2.50000000000000E+1
NdTemp 11 106 Fixed 0
2.50000000000000E+1
NdTemp 11 107 Fixed 0
2.50000000000000E+1
NdTemp 11 108 Fixed 0
2.50000000000000E+1
NdTemp 11 109 Fixed 0
2.50000000000000E+1
NdTemp 11 110 Fixed 0
2.50000000000000E+1
NdTemp 11 111 Fixed 0
2.50000000000000E+1
NdTemp 11 112 Fixed 0
2.50000000000000E+1
NdTemp 11 113 Fixed 0
2.50000000000000E+1
NdTemp 11 114 Fixed 0
2.50000000000000E+1
NdTemp 11 115 Fixed 0
2.50000000000000E+1
NdTemp 11 116 Fixed 0
2.50000000000000E+1
NdTemp 11 117 Fixed 0
2.50000000000000E+1
NdTemp 11 118 Fixed 0

2.50000000000000E+1
NdTemp 11 119 Fixed 0
2.50000000000000E+1
NdTemp 11 120 Fixed 0
2.50000000000000E+1
NdTemp 11 121 Fixed 0
2.50000000000000E+1
NdTemp 11 122 Fixed 0
2.50000000000000E+1
NdTemp 11 123 Fixed 0
2.50000000000000E+1
NdTemp 11 124 Fixed 0
2.50000000000000E+1
NdTemp 11 125 Fixed 0
2.50000000000000E+1
NdTemp 11 126 Fixed 0
2.50000000000000E+1
NdTemp 11 127 Fixed 0
2.50000000000000E+1
NdTemp 11 128 Fixed 0
2.50000000000000E+1
NdTemp 11 129 Fixed 0
2.50000000000000E+1
NdTemp 11 130 Fixed 0
2.50000000000000E+1
NdTemp 11 131 Fixed 0
2.50000000000000E+1
NdTemp 11 132 Fixed 0
2.50000000000000E+1
NdTemp 11 133 Fixed 0
2.50000000000000E+1
NdTemp 11 134 Fixed 0
2.50000000000000E+1
NdTemp 11 135 Fixed 0
2.50000000000000E+1
NdTemp 11 136 Fixed 0
2.50000000000000E+1
NdTemp 11 137 Fixed 0
2.50000000000000E+1
NdTemp 11 138 Fixed 0
2.50000000000000E+1
NdTemp 11 139 Fixed 0
2.50000000000000E+1
NdTemp 11 140 Fixed 0
2.50000000000000E+1
NdTemp 11 141 Fixed 0
2.50000000000000E+1
NdTemp 11 142 Fixed 0
2.50000000000000E+1
NdTemp 11 143 Fixed 0
2.50000000000000E+1
NdTemp 11 144 Fixed 0
2.50000000000000E+1
NdTemp 11 145 Fixed 0

2.50000000000000E+1
NdTemp 11 146 Fixed 0
2.50000000000000E+1
NdTemp 11 147 Fixed 0
2.50000000000000E+1
NdTemp 11 148 Fixed 0
2.50000000000000E+1
NdTemp 11 149 Fixed 0
2.50000000000000E+1
NdTemp 11 150 Fixed 0
2.50000000000000E+1
NdTemp 11 151 Fixed 0
2.50000000000000E+1
NdTemp 11 152 Fixed 0
2.50000000000000E+1
NdTemp 11 153 Fixed 0
2.50000000000000E+1
NdTemp 11 154 Fixed 0
2.50000000000000E+1
NdTemp 11 155 Fixed 0
2.50000000000000E+1
NdTemp 11 156 Fixed 0
2.50000000000000E+1
NdTemp 11 157 Fixed 0
2.50000000000000E+1
NdTemp 11 158 Fixed 0
2.50000000000000E+1
NdTemp 11 159 Fixed 0
2.50000000000000E+1
NdTemp 11 160 Fixed 0
2.50000000000000E+1
NdTemp 11 161 Fixed 0
2.50000000000000E+1
NdTemp 11 162 Fixed 0
2.50000000000000E+1
NdTemp 11 163 Fixed 0
2.50000000000000E+1
NdTemp 11 164 Fixed 0
2.50000000000000E+1
NdTemp 11 165 Fixed 0
2.50000000000000E+1
NdTemp 11 166 Fixed 0
2.50000000000000E+1
NdTemp 11 167 Fixed 0
2.50000000000000E+1
NdTemp 11 168 Fixed 0
2.50000000000000E+1
NdTemp 11 169 Fixed 0
2.50000000000000E+1
NdTemp 11 170 Fixed 0
2.50000000000000E+1
NdTemp 11 171 Fixed 0
2.50000000000000E+1
NdTemp 11 172 Fixed 0

2.50000000000000E+1
NdTemp 11 173 Fixed 0
2.50000000000000E+1
NdTemp 11 174 Fixed 0
2.50000000000000E+1
NdTemp 11 175 Fixed 0
2.50000000000000E+1
NdTemp 11 176 Fixed 0
2.50000000000000E+1
NdTemp 11 177 Fixed 0
2.50000000000000E+1
NdTemp 11 178 Fixed 0
2.50000000000000E+1
NdTemp 11 179 Fixed 0
2.50000000000000E+1
NdTemp 11 180 Fixed 0
2.50000000000000E+1
NdTemp 11 181 Fixed 0
2.50000000000000E+1
NdTemp 11 182 Fixed 0
2.50000000000000E+1
NdTemp 11 183 Fixed 0
2.50000000000000E+1
NdTemp 11 184 Fixed 0
2.50000000000000E+1
NdTemp 11 185 Fixed 0
2.50000000000000E+1
NdTemp 11 186 Fixed 0
2.50000000000000E+1
NdTemp 11 187 Fixed 0
2.50000000000000E+1
NdTemp 11 188 Fixed 0
2.50000000000000E+1
NdTemp 11 189 Fixed 0
2.50000000000000E+1
NdTemp 11 190 Fixed 0
2.50000000000000E+1
NdTemp 11 191 Fixed 0
2.50000000000000E+1
NdTemp 11 192 Fixed 0
2.50000000000000E+1
NdTemp 11 193 Fixed 0
2.50000000000000E+1
NdTemp 11 194 Fixed 0
2.50000000000000E+1
NdTemp 11 195 Fixed 0
2.50000000000000E+1
NdTemp 11 196 Fixed 0
2.50000000000000E+1
NdTemp 11 197 Fixed 0
2.50000000000000E+1
NdTemp 11 198 Fixed 0
2.50000000000000E+1
NdTemp 11 199 Fixed 0

2.50000000000000E+1
NdTemp 11 200 Fixed 0
2.50000000000000E+1
NdTemp 11 201 Fixed 0
2.50000000000000E+1
NdTemp 11 202 Fixed 0
2.50000000000000E+1
NdTemp 11 203 Fixed 0
2.50000000000000E+1
NdTemp 11 204 Fixed 0
2.50000000000000E+1
NdTemp 11 205 Fixed 0
2.50000000000000E+1
NdTemp 11 206 Fixed 0
2.50000000000000E+1
NdTemp 11 207 Fixed 0
2.50000000000000E+1
NdTemp 11 208 Fixed 0
2.50000000000000E+1
NdTemp 11 209 Fixed 0
2.50000000000000E+1
NdTemp 11 210 Fixed 0
2.50000000000000E+1
NdTemp 11 211 Fixed 0
2.50000000000000E+1
NdTemp 11 212 Fixed 0
2.50000000000000E+1
NdTemp 11 213 Fixed 0
2.50000000000000E+1
NdTemp 11 214 Fixed 0
2.50000000000000E+1
NdTemp 11 215 Fixed 0
2.50000000000000E+1
NdTemp 11 216 Fixed 0
2.50000000000000E+1
NdTemp 11 217 Fixed 0
2.50000000000000E+1
NdTemp 11 218 Fixed 0
2.50000000000000E+1
NdTemp 11 219 Fixed 0
2.50000000000000E+1
NdTemp 11 220 Fixed 0
2.50000000000000E+1
NdTemp 11 221 Fixed 0
2.50000000000000E+1
NdTemp 11 222 Fixed 0
2.50000000000000E+1
NdTemp 11 223 Fixed 0
2.50000000000000E+1
NdTemp 11 224 Fixed 0
2.50000000000000E+1
NdTemp 11 225 Fixed 0
2.50000000000000E+1
NdTemp 11 226 Fixed 0

2.50000000000000E+1
NdTemp 11 227 Fixed 0
2.50000000000000E+1
NdTemp 11 228 Fixed 0
2.50000000000000E+1
NdTemp 11 229 Fixed 0
2.50000000000000E+1
NdTemp 11 230 Fixed 0
2.50000000000000E+1
NdTemp 11 231 Fixed 0
2.50000000000000E+1
NdTemp 11 232 Fixed 0
2.50000000000000E+1
NdTemp 11 233 Fixed 0
2.50000000000000E+1
NdTemp 11 234 Fixed 0
2.50000000000000E+1
NdTemp 11 235 Fixed 0
2.50000000000000E+1
NdTemp 11 236 Fixed 0
2.50000000000000E+1
NdTemp 11 237 Fixed 0
2.50000000000000E+1
NdTemp 11 238 Fixed 0
2.50000000000000E+1
NdTemp 11 239 Fixed 0
2.50000000000000E+1
NdTemp 11 240 Fixed 0
2.50000000000000E+1
NdTemp 11 241 Fixed 0
2.50000000000000E+1
NdTemp 11 242 Fixed 0
2.50000000000000E+1
NdTemp 11 243 Fixed 0
2.50000000000000E+1
NdTemp 11 244 Fixed 0
2.50000000000000E+1
NdTemp 11 245 Fixed 0
2.50000000000000E+1
NdTemp 11 246 Fixed 0
2.50000000000000E+1
NdTemp 11 247 Fixed 0
2.50000000000000E+1
NdTemp 11 248 Fixed 0
2.50000000000000E+1
NdTemp 11 249 Fixed 0
2.50000000000000E+1
NdTemp 11 250 Fixed 0
2.50000000000000E+1
NdTemp 11 251 Fixed 0
2.50000000000000E+1
NdTemp 11 252 Fixed 0
2.50000000000000E+1
NdTemp 11 253 Fixed 0

2.50000000000000E+1				
NdTemp	11	254	Fixed	0
2.50000000000000E+1				
NdTemp	11	255	Fixed	0
2.50000000000000E+1				
NdTemp	11	256	Fixed	0
2.50000000000000E+1				
NdTemp	11	257	Fixed	0
2.50000000000000E+1				
NdTemp	11	258	Fixed	0
2.50000000000000E+1				
NdTemp	11	259	Fixed	0
2.50000000000000E+1				
NdTemp	11	260	Fixed	0
2.50000000000000E+1				
NdTemp	11	261	Fixed	0
2.50000000000000E+1				
NdTemp	11	262	Fixed	0
2.50000000000000E+1				
NdTemp	11	263	Fixed	0
2.50000000000000E+1				
NdTemp	11	264	Fixed	0
2.50000000000000E+1				
NdTemp	11	265	Fixed	0
2.50000000000000E+1				
NdTemp	11	266	Fixed	0
2.50000000000000E+1				
NdTemp	11	267	Fixed	0
2.50000000000000E+1				
NdTemp	11	268	Fixed	0
2.50000000000000E+1				
NdTemp	11	269	Fixed	0
2.50000000000000E+1				
NdTemp	11	270	Fixed	0
2.50000000000000E+1				
NdTemp	11	271	Fixed	0
2.50000000000000E+1				
NdTemp	11	272	Fixed	0
2.50000000000000E+1				
NdTemp	11	273	Fixed	0
2.50000000000000E+1				
NdTemp	11	274	Fixed	0
2.50000000000000E+1				
NdTemp	11	275	Fixed	0
2.50000000000000E+1				
NdTemp	11	276	Fixed	0
2.50000000000000E+1				
NdTemp	11	277	Fixed	0
2.50000000000000E+1				
NdTemp	11	278	Fixed	0
2.50000000000000E+1				
NdTemp	11	279	Fixed	0
2.50000000000000E+1				
NdTemp	11	280	Fixed	0

2.50000000000000E+1
NdTemp 11 281 Fixed 0
2.50000000000000E+1
NdTemp 11 282 Fixed 0
2.50000000000000E+1
NdTemp 11 283 Fixed 0
2.50000000000000E+1
NdTemp 11 284 Fixed 0
2.50000000000000E+1
NdTemp 11 285 Fixed 0
2.50000000000000E+1
NdTemp 11 286 Fixed 0
2.50000000000000E+1
NdTemp 11 287 Fixed 0
2.50000000000000E+1
NdTemp 11 288 Fixed 0
2.50000000000000E+1
NdTemp 11 289 Fixed 0
2.50000000000000E+1
NdTemp 11 290 Fixed 0
2.50000000000000E+1
NdTemp 11 291 Fixed 0
2.50000000000000E+1
NdTemp 11 292 Fixed 0
2.50000000000000E+1
NdTemp 11 293 Fixed 0
2.50000000000000E+1
NdTemp 11 294 Fixed 0
2.50000000000000E+1
NdTemp 11 295 Fixed 0
2.50000000000000E+1
NdTemp 11 296 Fixed 0
2.50000000000000E+1
NdTemp 11 297 Fixed 0
2.50000000000000E+1
NdTemp 11 298 Fixed 0
2.50000000000000E+1
NdTemp 11 299 Fixed 0
2.50000000000000E+1
NdTemp 11 300 Fixed 0
2.50000000000000E+1
NdTemp 11 301 Fixed 0
2.50000000000000E+1
NdTemp 11 302 Fixed 0
2.50000000000000E+1
NdTemp 11 303 Fixed 0
2.50000000000000E+1
NdTemp 11 304 Fixed 0
2.50000000000000E+1
NdTemp 11 305 Fixed 0
2.50000000000000E+1
NdTemp 11 306 Fixed 0
2.50000000000000E+1
NdTemp 11 307 Fixed 0

2.50000000000000E+1
NdTemp 11 308 Fixed 0
2.50000000000000E+1
NdTemp 11 309 Fixed 0
2.50000000000000E+1
NdTemp 11 310 Fixed 0
2.50000000000000E+1
NdTemp 11 311 Fixed 0
2.50000000000000E+1
NdTemp 11 312 Fixed 0
2.50000000000000E+1
NdTemp 11 313 Fixed 0
2.50000000000000E+1
NdTemp 11 314 Fixed 0
2.50000000000000E+1
NdTemp 11 315 Fixed 0
2.50000000000000E+1
NdTemp 11 316 Fixed 0
2.50000000000000E+1
NdTemp 11 317 Fixed 0
2.50000000000000E+1
NdTemp 11 318 Fixed 0
2.50000000000000E+1
NdTemp 11 319 Fixed 0
2.50000000000000E+1
NdTemp 11 320 Fixed 0
2.50000000000000E+1
NdTemp 11 321 Fixed 0
2.50000000000000E+1
NdTemp 11 322 Fixed 0
2.50000000000000E+1
NdTemp 11 323 Fixed 0
2.50000000000000E+1
NdTemp 11 324 Fixed 0
2.50000000000000E+1
NdTemp 11 325 Fixed 0
2.50000000000000E+1
NdTemp 11 326 Fixed 0
2.50000000000000E+1
NdTemp 11 327 Fixed 0
2.50000000000000E+1
NdTemp 11 328 Fixed 0
2.50000000000000E+1
NdTemp 11 329 Fixed 0
2.50000000000000E+1
NdTemp 11 330 Fixed 0
2.50000000000000E+1
NdTemp 11 331 Fixed 0
2.50000000000000E+1
NdTemp 11 332 Fixed 0
2.50000000000000E+1
NdTemp 11 333 Fixed 0
2.50000000000000E+1
NdTemp 11 334 Fixed 0

2.50000000000000E+1
NdTemp 11 335 Fixed 0
2.50000000000000E+1
NdTemp 11 336 Fixed 0
2.50000000000000E+1
NdTemp 11 337 Fixed 0
2.50000000000000E+1
NdTemp 11 338 Fixed 0
2.50000000000000E+1
NdTemp 11 339 Fixed 0
2.50000000000000E+1
NdTemp 11 340 Fixed 0
2.50000000000000E+1
NdTemp 11 341 Fixed 0
2.50000000000000E+1
NdTemp 11 342 Fixed 0
2.50000000000000E+1
NdTemp 11 343 Fixed 0
2.50000000000000E+1
NdTemp 11 344 Fixed 0
2.50000000000000E+1
NdTemp 11 345 Fixed 0
2.50000000000000E+1
NdTemp 11 346 Fixed 0
2.50000000000000E+1
NdTemp 11 347 Fixed 0
2.50000000000000E+1
NdTemp 11 348 Fixed 0
2.50000000000000E+1
NdTemp 11 349 Fixed 0
2.50000000000000E+1
NdTemp 11 350 Fixed 0
2.50000000000000E+1
NdTemp 11 351 Fixed 0
2.50000000000000E+1
NdTemp 11 352 Fixed 0
2.50000000000000E+1
NdTemp 11 353 Fixed 0
2.50000000000000E+1
NdTemp 11 354 Fixed 0
2.50000000000000E+1
NdTemp 11 355 Fixed 0
2.50000000000000E+1
NdTemp 11 356 Fixed 0
2.50000000000000E+1
NdTemp 11 357 Fixed 0
2.50000000000000E+1
NdTemp 11 358 Fixed 0
2.50000000000000E+1
NdTemp 11 359 Fixed 0
2.50000000000000E+1
NdTemp 11 360 Fixed 0
2.50000000000000E+1
NdTemp 11 361 Fixed 0

2.50000000000000E+1
NdTemp 11 362 Fixed 0
2.50000000000000E+1
NdTemp 11 363 Fixed 0
2.50000000000000E+1
NdTemp 11 364 Fixed 0
2.50000000000000E+1
NdTemp 11 365 Fixed 0
2.50000000000000E+1
NdTemp 11 366 Fixed 0
2.50000000000000E+1
NdTemp 11 367 Fixed 0
2.50000000000000E+1
NdTemp 11 368 Fixed 0
2.50000000000000E+1
NdTemp 11 369 Fixed 0
2.50000000000000E+1
NdTemp 11 370 Fixed 0
2.50000000000000E+1
NdTemp 11 371 Fixed 0
2.50000000000000E+1
NdTemp 11 372 Fixed 0
2.50000000000000E+1
NdTemp 11 373 Fixed 0
2.50000000000000E+1
NdTemp 11 374 Fixed 0
2.50000000000000E+1
NdTemp 11 375 Fixed 0
2.50000000000000E+1
NdTemp 11 376 Fixed 0
2.50000000000000E+1
NdTemp 11 377 Fixed 0
2.50000000000000E+1
NdTemp 11 378 Fixed 0
2.50000000000000E+1
NdTemp 11 379 Fixed 0
2.50000000000000E+1
NdTemp 11 380 Fixed 0
2.50000000000000E+1
NdTemp 11 381 Fixed 0
2.50000000000000E+1
NdTemp 11 382 Fixed 0
2.50000000000000E+1
NdTemp 11 383 Fixed 0
2.50000000000000E+1
NdTemp 11 384 Fixed 0
2.50000000000000E+1
NdTemp 11 385 Fixed 0
2.50000000000000E+1
NdTemp 11 386 Fixed 0
2.50000000000000E+1
NdTemp 11 387 Fixed 0
2.50000000000000E+1
NdTemp 11 388 Fixed 0

2.50000000000000E+1
NdTemp 11 389 Fixed 0
2.50000000000000E+1
NdTemp 11 390 Fixed 0
2.50000000000000E+1
NdTemp 11 391 Fixed 0
2.50000000000000E+1
NdTemp 11 392 Fixed 0
2.50000000000000E+1
NdTemp 11 393 Fixed 0
2.50000000000000E+1
NdTemp 11 394 Fixed 0
2.50000000000000E+1
NdTemp 11 395 Fixed 0
2.50000000000000E+1
NdTemp 11 396 Fixed 0
2.50000000000000E+1
NdTemp 11 397 Fixed 0
2.50000000000000E+1
NdTemp 11 398 Fixed 0
2.50000000000000E+1
NdTemp 11 399 Fixed 0
2.50000000000000E+1
NdTemp 11 400 Fixed 0
2.50000000000000E+1
NdTemp 11 401 Fixed 0
2.50000000000000E+1
NdTemp 11 402 Fixed 0
2.50000000000000E+1
NdTemp 11 403 Fixed 0
2.50000000000000E+1
NdTemp 11 404 Fixed 0
2.50000000000000E+1
NdTemp 11 405 Fixed 0
2.50000000000000E+1
NdTemp 11 406 Fixed 0
2.50000000000000E+1
NdTemp 11 407 Fixed 0
2.50000000000000E+1
NdTemp 11 408 Fixed 0
2.50000000000000E+1
NdTemp 11 409 Fixed 0
2.50000000000000E+1
NdTemp 11 410 Fixed 0
2.50000000000000E+1
NdTemp 11 411 Fixed 0
2.50000000000000E+1
NdTemp 11 412 Fixed 0
2.50000000000000E+1
NdTemp 11 413 Fixed 0
2.50000000000000E+1
NdTemp 11 414 Fixed 0
2.50000000000000E+1
NdTemp 11 415 Fixed 0

2.50000000000000E+1
NdTemp 11 416 Fixed 0
2.50000000000000E+1
NdTemp 11 417 Fixed 0
2.50000000000000E+1
NdTemp 11 418 Fixed 0
2.50000000000000E+1
NdTemp 11 419 Fixed 0
2.50000000000000E+1
NdTemp 11 420 Fixed 0
2.50000000000000E+1
NdTemp 11 421 Fixed 0
2.50000000000000E+1
NdTemp 11 422 Fixed 0
2.50000000000000E+1
NdTemp 11 423 Fixed 0
2.50000000000000E+1
NdTemp 11 424 Fixed 0
2.50000000000000E+1
NdTemp 11 425 Fixed 0
2.50000000000000E+1
NdTemp 11 426 Fixed 0
2.50000000000000E+1
NdTemp 11 427 Fixed 0
2.50000000000000E+1
NdTemp 11 428 Fixed 0
2.50000000000000E+1
NdTemp 11 429 Fixed 0
2.50000000000000E+1
NdTemp 11 430 Fixed 0
2.50000000000000E+1
NdTemp 11 431 Fixed 0
2.50000000000000E+1
NdTemp 11 432 Fixed 0
2.50000000000000E+1
NdTemp 11 433 Fixed 0
2.50000000000000E+1
NdTemp 11 434 Fixed 0
2.50000000000000E+1
NdTemp 11 435 Fixed 0
2.50000000000000E+1
NdTemp 11 436 Fixed 0
2.50000000000000E+1
NdTemp 11 437 Fixed 0
2.50000000000000E+1
NdTemp 11 438 Fixed 0
2.50000000000000E+1
NdTemp 11 439 Fixed 0
2.50000000000000E+1
NdTemp 11 440 Fixed 0
2.50000000000000E+1
NdTemp 11 441 Fixed 0
2.50000000000000E+1
NdTemp 11 442 Fixed 0

2.50000000000000E+1
NdTemp 11 443 Fixed 0
2.50000000000000E+1
NdTemp 11 444 Fixed 0
2.50000000000000E+1
NdTemp 11 445 Fixed 0
2.50000000000000E+1
NdTemp 11 446 Fixed 0
2.50000000000000E+1
NdTemp 11 447 Fixed 0
2.50000000000000E+1
NdTemp 11 448 Fixed 0
2.50000000000000E+1
NdTemp 11 449 Fixed 0
2.50000000000000E+1
NdTemp 11 450 Fixed 0
2.50000000000000E+1
NdTemp 11 451 Fixed 0
2.50000000000000E+1
NdTemp 11 452 Fixed 0
2.50000000000000E+1
NdTemp 11 453 Fixed 0
2.50000000000000E+1
NdTemp 11 454 Fixed 0
2.50000000000000E+1
NdTemp 11 455 Fixed 0
2.50000000000000E+1
NdTemp 11 456 Fixed 0
2.50000000000000E+1
NdTemp 11 457 Fixed 0
2.50000000000000E+1
NdTemp 11 458 Fixed 0
2.50000000000000E+1
NdTemp 11 459 Fixed 0
2.50000000000000E+1
NdTemp 11 460 Fixed 0
2.50000000000000E+1
NdTemp 11 461 Fixed 0
2.50000000000000E+1
NdTemp 11 462 Fixed 0
2.50000000000000E+1
NdTemp 11 463 Fixed 0
2.50000000000000E+1
NdTemp 11 464 Fixed 0
2.50000000000000E+1
NdTemp 11 465 Fixed 0
2.50000000000000E+1
NdTemp 11 466 Fixed 0
2.50000000000000E+1
NdTemp 11 467 Fixed 0
2.50000000000000E+1
NdTemp 11 468 Fixed 0
2.50000000000000E+1
NdTemp 11 469 Fixed 0

2.50000000000000E+1
NdTemp 11 470 Fixed 0
2.50000000000000E+1
NdTemp 11 471 Fixed 0
2.50000000000000E+1
NdTemp 11 472 Fixed 0
2.50000000000000E+1
NdTemp 11 473 Fixed 0
2.50000000000000E+1
NdTemp 11 474 Fixed 0
2.50000000000000E+1
NdTemp 11 475 Fixed 0
2.50000000000000E+1
NdTemp 11 476 Fixed 0
2.50000000000000E+1
NdTemp 11 477 Fixed 0
2.50000000000000E+1
NdTemp 11 478 Fixed 0
2.50000000000000E+1
NdTemp 11 479 Fixed 0
2.50000000000000E+1
NdTemp 11 480 Fixed 0
2.50000000000000E+1
NdTemp 11 481 Fixed 0
2.50000000000000E+1
NdTemp 11 482 Fixed 0
2.50000000000000E+1
NdTemp 11 483 Fixed 0
2.50000000000000E+1
NdTemp 11 484 Fixed 0
2.50000000000000E+1
NdTemp 11 485 Fixed 0
2.50000000000000E+1
NdTemp 11 486 Fixed 0
2.50000000000000E+1
NdTemp 11 487 Fixed 0
2.50000000000000E+1
NdTemp 11 488 Fixed 0
2.50000000000000E+1
NdTemp 11 489 Fixed 0
2.50000000000000E+1
NdTemp 11 490 Fixed 0
2.50000000000000E+1
NdTemp 11 491 Fixed 0
2.50000000000000E+1
NdTemp 11 492 Fixed 0
2.50000000000000E+1
NdTemp 11 493 Fixed 0
2.50000000000000E+1
NdTemp 11 494 Fixed 0
2.50000000000000E+1
NdTemp 11 495 Fixed 0
2.50000000000000E+1
NdTemp 11 496 Fixed 0

2.50000000000000E+1
NdTemp 11 497 Fixed 0
2.50000000000000E+1
NdTemp 11 498 Fixed 0
2.50000000000000E+1
NdTemp 11 499 Fixed 0
2.50000000000000E+1
NdTemp 11 500 Fixed 0
2.50000000000000E+1
NdTemp 11 501 Fixed 0
2.50000000000000E+1
NdTemp 11 502 Fixed 0
2.50000000000000E+1
NdTemp 11 503 Fixed 0
2.50000000000000E+1
NdTemp 11 504 Fixed 0
2.50000000000000E+1
NdTemp 11 505 Fixed 0
2.50000000000000E+1
NdTemp 11 506 Fixed 0
2.50000000000000E+1
NdTemp 11 507 Fixed 0
2.50000000000000E+1
NdTemp 11 508 Fixed 0
2.50000000000000E+1
NdTemp 11 509 Fixed 0
2.50000000000000E+1
NdTemp 11 510 Fixed 0
2.50000000000000E+1
NdTemp 11 511 Fixed 0
2.50000000000000E+1
NdTemp 11 512 Fixed 0
2.50000000000000E+1
NdTemp 11 513 Fixed 0
2.50000000000000E+1
NdTemp 11 514 Fixed 0
2.50000000000000E+1
NdTemp 11 515 Fixed 0
2.50000000000000E+1
NdTemp 11 516 Fixed 0
2.50000000000000E+1
NdTemp 11 517 Fixed 0
2.50000000000000E+1
NdTemp 11 518 Fixed 0
2.50000000000000E+1
NdTemp 11 519 Fixed 0
2.50000000000000E+1
NdTemp 11 520 Fixed 0
2.50000000000000E+1
NdTemp 11 521 Fixed 0
2.50000000000000E+1
NdTemp 11 522 Fixed 0
2.50000000000000E+1
NdTemp 11 523 Fixed 0

2.50000000000000E+1
NdTemp 11 524 Fixed 0
2.50000000000000E+1
NdTemp 11 525 Fixed 0
2.50000000000000E+1
NdTemp 11 526 Fixed 0
2.50000000000000E+1
NdTemp 11 527 Fixed 0
2.50000000000000E+1
NdTemp 11 528 Fixed 0
2.50000000000000E+1
NdTemp 11 529 Fixed 0
2.50000000000000E+1
NdTemp 11 530 Fixed 0
2.50000000000000E+1
NdTemp 11 531 Fixed 0
2.50000000000000E+1
NdTemp 11 532 Fixed 0
2.50000000000000E+1
NdTemp 11 533 Fixed 0
2.50000000000000E+1
NdTemp 11 534 Fixed 0
2.50000000000000E+1
NdTemp 11 535 Fixed 0
2.50000000000000E+1
NdTemp 11 536 Fixed 0
2.50000000000000E+1
NdTemp 11 537 Fixed 0
2.50000000000000E+1
NdTemp 11 538 Fixed 0
2.50000000000000E+1
NdTemp 11 539 Fixed 0
2.50000000000000E+1
NdTemp 11 540 Fixed 0
2.50000000000000E+1
NdTemp 11 541 Fixed 0
2.50000000000000E+1
NdTemp 11 542 Fixed 0
2.50000000000000E+1
NdTemp 11 543 Fixed 0
2.50000000000000E+1
NdTemp 11 544 Fixed 0
2.50000000000000E+1
NdTemp 11 545 Fixed 0
2.50000000000000E+1
NdTemp 11 546 Fixed 0
2.50000000000000E+1
NdTemp 11 547 Fixed 0
2.50000000000000E+1
NdTemp 11 548 Fixed 0
2.50000000000000E+1
NdTemp 11 549 Fixed 0
2.50000000000000E+1
NdTemp 11 550 Fixed 0

2.50000000000000E+1
NdTemp 11 551 Fixed 0
2.50000000000000E+1
NdTemp 11 552 Fixed 0
2.50000000000000E+1
NdTemp 11 553 Fixed 0
2.50000000000000E+1
NdTemp 11 554 Fixed 0
2.50000000000000E+1
NdTemp 11 555 Fixed 0
2.50000000000000E+1
NdTemp 11 556 Fixed 0
2.50000000000000E+1
NdTemp 11 557 Fixed 0
2.50000000000000E+1
NdTemp 11 558 Fixed 0
2.50000000000000E+1
NdTemp 11 559 Fixed 0
2.50000000000000E+1
NdTemp 11 560 Fixed 0
2.50000000000000E+1
NdTemp 11 561 Fixed 0
2.50000000000000E+1
NdTemp 11 562 Fixed 0
2.50000000000000E+1
NdTemp 11 563 Fixed 0
2.50000000000000E+1
NdTemp 11 564 Fixed 0
2.50000000000000E+1
NdTemp 11 565 Fixed 0
2.50000000000000E+1
NdTemp 11 566 Fixed 0
2.50000000000000E+1
NdTemp 11 567 Fixed 0
2.50000000000000E+1
NdTemp 11 568 Fixed 0
2.50000000000000E+1
NdTemp 11 569 Fixed 0
2.50000000000000E+1
NdTemp 11 570 Fixed 0
2.50000000000000E+1
NdTemp 11 571 Fixed 0
2.50000000000000E+1
NdTemp 11 572 Fixed 0
2.50000000000000E+1
NdTemp 11 573 Fixed 0
2.50000000000000E+1
NdTemp 11 574 Fixed 0
2.50000000000000E+1
NdTemp 11 575 Fixed 0
2.50000000000000E+1
NdTemp 11 576 Fixed 0
2.50000000000000E+1
NdTemp 11 577 Fixed 0

2.50000000000000E+1
NdTemp 11 578 Fixed 0
2.50000000000000E+1
NdTemp 11 579 Fixed 0
2.50000000000000E+1
NdTemp 11 580 Fixed 0
2.50000000000000E+1
NdTemp 11 581 Fixed 0
2.50000000000000E+1
NdTemp 11 582 Fixed 0
2.50000000000000E+1
NdTemp 11 583 Fixed 0
2.50000000000000E+1
NdTemp 11 584 Fixed 0
2.50000000000000E+1
NdTemp 11 585 Fixed 0
2.50000000000000E+1
NdTemp 11 586 Fixed 0
2.50000000000000E+1
NdTemp 11 587 Fixed 0
2.50000000000000E+1
NdTemp 11 588 Fixed 0
2.50000000000000E+1
NdTemp 11 589 Fixed 0
2.50000000000000E+1
NdTemp 11 590 Fixed 0
2.50000000000000E+1
NdTemp 11 591 Fixed 0
2.50000000000000E+1
NdTemp 11 592 Fixed 0
2.50000000000000E+1
NdTemp 11 593 Fixed 0
2.50000000000000E+1
NdTemp 11 594 Fixed 0
2.50000000000000E+1
NdTemp 11 595 Fixed 0
2.50000000000000E+1
NdTemp 11 596 Fixed 0
2.50000000000000E+1
NdTemp 11 597 Fixed 0
2.50000000000000E+1
NdTemp 11 598 Fixed 0
2.50000000000000E+1
NdTemp 11 599 Fixed 0
2.50000000000000E+1
NdTemp 11 600 Fixed 0
2.50000000000000E+1
NdTemp 11 601 Fixed 0
2.50000000000000E+1
NdTemp 11 602 Fixed 0
2.50000000000000E+1
NdTemp 11 603 Fixed 0
2.50000000000000E+1
NdTemp 11 604 Fixed 0

2.50000000000000E+1
NdTemp 11 605 Fixed 0
2.50000000000000E+1
NdTemp 11 606 Fixed 0
2.50000000000000E+1
NdTemp 11 607 Fixed 0
2.50000000000000E+1
NdTemp 11 608 Fixed 0
2.50000000000000E+1
NdTemp 11 609 Fixed 0
2.50000000000000E+1
NdTemp 11 610 Fixed 0
2.50000000000000E+1
NdTemp 11 611 Fixed 0
2.50000000000000E+1
NdTemp 11 612 Fixed 0
2.50000000000000E+1
NdTemp 11 613 Fixed 0
2.50000000000000E+1
NdTemp 11 614 Fixed 0
2.50000000000000E+1
NdTemp 11 615 Fixed 0
2.50000000000000E+1
NdTemp 11 616 Fixed 0
2.50000000000000E+1
NdTemp 11 617 Fixed 0
2.50000000000000E+1
NdTemp 11 618 Fixed 0
2.50000000000000E+1
NdTemp 11 619 Fixed 0
2.50000000000000E+1
NdTemp 11 620 Fixed 0
2.50000000000000E+1
NdTemp 11 621 Fixed 0
2.50000000000000E+1
NdTemp 11 622 Fixed 0
2.50000000000000E+1
NdTemp 11 623 Fixed 0
2.50000000000000E+1
NdTemp 11 624 Fixed 0
2.50000000000000E+1
NdTemp 11 625 Fixed 0
2.50000000000000E+1
NdTemp 11 626 Fixed 0
2.50000000000000E+1
NdTemp 11 627 Fixed 0
2.50000000000000E+1
NdTemp 11 628 Fixed 0
2.50000000000000E+1
NdTemp 11 629 Fixed 0
2.50000000000000E+1
NdTemp 11 630 Fixed 0
2.50000000000000E+1
NdTemp 11 631 Fixed 0

2.50000000000000E+1
NdTemp 11 632 Fixed 0
2.50000000000000E+1
NdTemp 11 633 Fixed 0
2.50000000000000E+1
NdTemp 11 634 Fixed 0
2.50000000000000E+1
NdTemp 11 635 Fixed 0
2.50000000000000E+1
NdTemp 11 636 Fixed 0
2.50000000000000E+1
NdTemp 11 637 Fixed 0
2.50000000000000E+1
NdTemp 11 638 Fixed 0
2.50000000000000E+1
NdTemp 11 639 Fixed 0
2.50000000000000E+1
NdTemp 11 640 Fixed 0
2.50000000000000E+1
NdTemp 11 641 Fixed 0
2.50000000000000E+1
NdTemp 11 642 Fixed 0
2.50000000000000E+1
NdTemp 11 643 Fixed 0
2.50000000000000E+1
NdTemp 11 644 Fixed 0
2.50000000000000E+1
NdTemp 11 645 Fixed 0
2.50000000000000E+1
NdTemp 11 646 Fixed 0
2.50000000000000E+1
NdTemp 11 647 Fixed 0
2.50000000000000E+1
NdTemp 11 648 Fixed 0
2.50000000000000E+1
NdTemp 11 649 Fixed 0
2.50000000000000E+1
NdTemp 11 650 Fixed 0
2.50000000000000E+1
NdTemp 11 651 Fixed 0
2.50000000000000E+1
NdTemp 11 652 Fixed 0
2.50000000000000E+1
NdTemp 11 653 Fixed 0
2.50000000000000E+1
NdTemp 11 654 Fixed 0
2.50000000000000E+1
NdTemp 11 655 Fixed 0
2.50000000000000E+1
NdTemp 11 656 Fixed 0
2.50000000000000E+1
NdTemp 11 657 Fixed 0
2.50000000000000E+1
NdTemp 11 658 Fixed 0

2.50000000000000E+1				
NdTemp	11	659	Fixed	0
2.50000000000000E+1				
NdTemp	11	660	Fixed	0
2.50000000000000E+1				
NdTemp	11	661	Fixed	0
2.50000000000000E+1				
NdTemp	11	662	Fixed	0
2.50000000000000E+1				
NdTemp	11	663	Fixed	0
2.50000000000000E+1				
NdTemp	11	664	Fixed	0
2.50000000000000E+1				
NdTemp	11	665	Fixed	0
2.50000000000000E+1				
NdTemp	11	666	Fixed	0
2.50000000000000E+1				
NdTemp	11	667	Fixed	0
2.50000000000000E+1				
NdTemp	11	668	Fixed	0
2.50000000000000E+1				
NdTemp	11	669	Fixed	0
2.50000000000000E+1				
NdTemp	11	670	Fixed	0
2.50000000000000E+1				
NdTemp	11	671	Fixed	0
2.50000000000000E+1				
NdTemp	11	672	Fixed	0
2.50000000000000E+1				
NdTemp	11	673	Fixed	0
2.50000000000000E+1				
NdTemp	11	674	Fixed	0
2.50000000000000E+1				
NdTemp	11	675	Fixed	0
2.50000000000000E+1				
NdTemp	11	676	Fixed	0
2.50000000000000E+1				
NdTemp	11	677	Fixed	0
2.50000000000000E+1				
NdTemp	11	678	Fixed	0
2.50000000000000E+1				
NdTemp	11	679	Fixed	0
2.50000000000000E+1				
NdTemp	11	680	Fixed	0
2.50000000000000E+1				
NdTemp	11	681	Fixed	0
2.50000000000000E+1				
NdTemp	11	682	Fixed	0
2.50000000000000E+1				
NdTemp	11	683	Fixed	0
2.50000000000000E+1				
NdTemp	11	684	Fixed	0
2.50000000000000E+1				
NdTemp	11	685	Fixed	0

2.50000000000000E+1				
NdTemp	11	686	Fixed	0
2.50000000000000E+1				
NdTemp	11	687	Fixed	0
2.50000000000000E+1				
NdTemp	11	688	Fixed	0
2.50000000000000E+1				
NdTemp	11	689	Fixed	0
2.50000000000000E+1				
NdTemp	11	690	Fixed	0
2.50000000000000E+1				
NdTemp	11	691	Fixed	0
2.50000000000000E+1				
NdTemp	11	692	Fixed	0
2.50000000000000E+1				
NdTemp	11	693	Fixed	0
2.50000000000000E+1				
NdTemp	11	694	Fixed	0
2.50000000000000E+1				
NdTemp	11	695	Fixed	0
2.50000000000000E+1				
NdTemp	11	696	Fixed	0
2.50000000000000E+1				
NdTemp	11	697	Fixed	0
2.50000000000000E+1				
NdTemp	11	698	Fixed	0
2.50000000000000E+1				
NdTemp	11	699	Fixed	0
2.50000000000000E+1				
NdTemp	11	700	Fixed	0
2.50000000000000E+1				
NdTemp	11	701	Fixed	0
2.50000000000000E+1				
NdTemp	11	702	Fixed	0
2.50000000000000E+1				
NdTemp	11	703	Fixed	0
2.50000000000000E+1				
NdTemp	11	704	Fixed	0
2.50000000000000E+1				
NdTemp	11	705	Fixed	0
2.50000000000000E+1				
NdTemp	11	706	Fixed	0
2.50000000000000E+1				
NdTemp	11	707	Fixed	0
2.50000000000000E+1				
NdTemp	11	708	Fixed	0
2.50000000000000E+1				
NdTemp	11	709	Fixed	0
2.50000000000000E+1				
NdTemp	11	710	Fixed	0
2.50000000000000E+1				
NdTemp	11	711	Fixed	0
2.50000000000000E+1				
NdTemp	11	712	Fixed	0

2.50000000000000E+1
NdTemp 11 713 Fixed 0
2.50000000000000E+1
NdTemp 11 714 Fixed 0
2.50000000000000E+1
NdTemp 11 715 Fixed 0
2.50000000000000E+1
NdTemp 11 716 Fixed 0
2.50000000000000E+1
NdTemp 11 717 Fixed 0
2.50000000000000E+1
NdTemp 11 718 Fixed 0
2.50000000000000E+1
NdTemp 11 719 Fixed 0
2.50000000000000E+1
NdTemp 11 720 Fixed 0
2.50000000000000E+1
NdTemp 11 721 Fixed 0
2.50000000000000E+1
NdTemp 11 722 Fixed 0
2.50000000000000E+1
NdTemp 11 723 Fixed 0
2.50000000000000E+1
NdTemp 11 724 Fixed 0
2.50000000000000E+1
NdTemp 11 725 Fixed 0
2.50000000000000E+1
NdTemp 11 726 Fixed 0
2.50000000000000E+1
NdTemp 11 727 Fixed 0
2.50000000000000E+1
NdTemp 11 728 Fixed 0
2.50000000000000E+1
NdTemp 11 729 Fixed 0
2.50000000000000E+1
NdTemp 11 730 Fixed 0
2.50000000000000E+1
NdTemp 11 731 Fixed 0
2.50000000000000E+1
NdTemp 11 732 Fixed 0
2.50000000000000E+1
NdTemp 11 733 Fixed 0
2.50000000000000E+1
NdTemp 11 734 Fixed 0
2.50000000000000E+1
NdTemp 11 735 Fixed 0
2.50000000000000E+1
NdTemp 11 736 Fixed 0
2.50000000000000E+1
NdTemp 11 737 Fixed 0
2.50000000000000E+1
NdTemp 11 738 Fixed 0
2.50000000000000E+1
NdTemp 11 739 Fixed 0

2.50000000000000E+1				
NdTemp	11	740	Fixed	0
2.50000000000000E+1				
NdTemp	11	741	Fixed	0
2.50000000000000E+1				
NdTemp	11	742	Fixed	0
2.50000000000000E+1				
NdTemp	11	743	Fixed	0
2.50000000000000E+1				
NdTemp	11	744	Fixed	0
2.50000000000000E+1				
NdTemp	11	745	Fixed	0
2.50000000000000E+1				
NdTemp	11	746	Fixed	0
2.50000000000000E+1				
NdTemp	11	747	Fixed	0
2.50000000000000E+1				
NdTemp	11	748	Fixed	0
2.50000000000000E+1				
NdTemp	11	749	Fixed	0
2.50000000000000E+1				
NdTemp	11	750	Fixed	0
2.50000000000000E+1				
NdTemp	11	751	Fixed	0
2.50000000000000E+1				
NdTemp	11	752	Fixed	0
2.50000000000000E+1				
NdTemp	11	753	Fixed	0
2.50000000000000E+1				
NdTemp	11	754	Fixed	0
2.50000000000000E+1				
NdTemp	11	755	Fixed	0
2.50000000000000E+1				
NdTemp	11	756	Fixed	0
2.50000000000000E+1				
NdTemp	11	757	Fixed	0
2.50000000000000E+1				
NdTemp	11	758	Fixed	0
2.50000000000000E+1				
NdTemp	11	759	Fixed	0
2.50000000000000E+1				
NdTemp	11	760	Fixed	0
2.50000000000000E+1				
NdTemp	11	761	Fixed	0
2.50000000000000E+1				
NdTemp	11	762	Fixed	0
2.50000000000000E+1				
NdTemp	11	763	Fixed	0
2.50000000000000E+1				
NdTemp	11	764	Fixed	0
2.50000000000000E+1				
NdTemp	11	765	Fixed	0
2.50000000000000E+1				
NdTemp	11	766	Fixed	0

2.50000000000000E+1				
NdTemp	11	767	Fixed	0
2.50000000000000E+1				
NdTemp	11	768	Fixed	0
2.50000000000000E+1				
NdTemp	11	769	Fixed	0
2.50000000000000E+1				
NdTemp	11	770	Fixed	0
2.50000000000000E+1				
NdTemp	11	771	Fixed	0
2.50000000000000E+1				
NdTemp	11	772	Fixed	0
2.50000000000000E+1				
NdTemp	11	773	Fixed	0
2.50000000000000E+1				
NdTemp	11	774	Fixed	0
2.50000000000000E+1				
NdTemp	11	775	Fixed	0
2.50000000000000E+1				
NdTemp	11	776	Fixed	0
2.50000000000000E+1				
NdTemp	11	777	Fixed	0
2.50000000000000E+1				
NdTemp	11	778	Fixed	0
2.50000000000000E+1				
NdTemp	11	779	Fixed	0
2.50000000000000E+1				
NdTemp	11	780	Fixed	0
2.50000000000000E+1				
NdTemp	11	781	Fixed	0
2.50000000000000E+1				
NdTemp	11	782	Fixed	0
2.50000000000000E+1				
NdTemp	11	783	Fixed	0
2.50000000000000E+1				
NdTemp	11	784	Fixed	0
2.50000000000000E+1				
NdTemp	11	785	Fixed	0
2.50000000000000E+1				
NdTemp	11	786	Fixed	0
2.50000000000000E+1				
NdTemp	11	787	Fixed	0
2.50000000000000E+1				
NdTemp	11	788	Fixed	0
2.50000000000000E+1				
NdTemp	11	789	Fixed	0
2.50000000000000E+1				
NdTemp	11	790	Fixed	0
2.50000000000000E+1				
NdTemp	11	791	Fixed	0
2.50000000000000E+1				
NdTemp	11	792	Fixed	0
2.50000000000000E+1				
NdTemp	11	793	Fixed	0

```
2.50000000000000E+1
   NdTemp                  11     794      Fixed        0
2.50000000000000E+1
   NdTemp                  11     795      Fixed        0
2.50000000000000E+1
   NdTemp                  11     796      Fixed        0
2.50000000000000E+1
   NdTemp                  11     797      Fixed        0
2.50000000000000E+1
   NdTemp                  11     798      Fixed        0
2.50000000000000E+1
   NdTemp                  11     799      Fixed        0
2.50000000000000E+1
   NdTemp                  11     800      Fixed        0
2.50000000000000E+1
   NdTemp                  11     801      Fixed        0
2.50000000000000E+1
   NdTemp                  11     802      Fixed        0
2.50000000000000E+1
   NdTemp                  11     803      Fixed        0
2.50000000000000E+1
   NdTemp                  11     804      Fixed        0
2.50000000000000E+1
   NdTemp                  11     805      Fixed        0
2.50000000000000E+1
   NdTemp                  11     806      Fixed        0
2.50000000000000E+1
   NdTemp                  11     807      Fixed        0
2.50000000000000E+1
   NdTemp                  11     808      Fixed        0
2.50000000000000E+1
   NdTemp                  11     809      Fixed        0
2.50000000000000E+1
   NdTemp                  11     810      Fixed        0
2.50000000000000E+1
   NdTemp                  11     811      Fixed        0
2.50000000000000E+1
   NdTemp                  11     812      Fixed        0
2.50000000000000E+1
   NdTemp                  11     813      Fixed        0
2.50000000000000E+1
   NdTemp                  11     814      Fixed        0
2.50000000000000E+1
   NdTemp                  11     815      Fixed        0
2.50000000000000E+1
   NdTemp                  11     816      Fixed        0
2.50000000000000E+1
   NdTemp                  11     817      Fixed        0
2.50000000000000E+1
   NdTemp                  11     818      Fixed        0
2.50000000000000E+1

/ ____________________________________________________________________________
/ NODE TEMPERATURES
```

```
/ T01 - DTu = -25°C
   NdTemp                  12       1      Fixed        0
-2.50000000000000E+1
   NdTemp                  12       2      Fixed        0
-2.50000000000000E+1
   NdTemp                  12       3      Fixed        0
-2.50000000000000E+1
   NdTemp                  12       4      Fixed        0
-2.50000000000000E+1
   NdTemp                  12       5      Fixed        0
-2.50000000000000E+1
   NdTemp                  12       6      Fixed        0
-2.50000000000000E+1
   NdTemp                  12       7      Fixed        0
-2.50000000000000E+1
   NdTemp                  12       8      Fixed        0
-2.50000000000000E+1
   NdTemp                  12       9      Fixed        0
-2.50000000000000E+1
   NdTemp                  12      10      Fixed        0
-2.50000000000000E+1
   NdTemp                  12      11      Fixed        0
-2.50000000000000E+1
   NdTemp                  12      12      Fixed        0
-2.50000000000000E+1
   NdTemp                  12      13      Fixed        0
-2.50000000000000E+1
   NdTemp                  12      14      Fixed        0
-2.50000000000000E+1
   NdTemp                  12      15      Fixed        0
-2.50000000000000E+1
   NdTemp                  12      16      Fixed        0
-2.50000000000000E+1
   NdTemp                  12      17      Fixed        0
-2.50000000000000E+1
   NdTemp                  12      18      Fixed        0
-2.50000000000000E+1
   NdTemp                  12      19      Fixed        0
-2.50000000000000E+1
   NdTemp                  12      20      Fixed        0
-2.50000000000000E+1
   NdTemp                  12      21      Fixed        0
-2.50000000000000E+1
   NdTemp                  12      22      Fixed        0
-2.50000000000000E+1
   NdTemp                  12      23      Fixed        0
-2.50000000000000E+1
   NdTemp                  12      24      Fixed        0
-2.50000000000000E+1
   NdTemp                  12      25      Fixed        0
-2.50000000000000E+1
   NdTemp                  12      26      Fixed        0
-2.50000000000000E+1
   NdTemp                  12      27      Fixed        0
```

-2.50000000000000E+1
NdTemp 12 28 Fixed 0
-2.50000000000000E+1
NdTemp 12 29 Fixed 0
-2.50000000000000E+1
NdTemp 12 30 Fixed 0
-2.50000000000000E+1
NdTemp 12 31 Fixed 0
-2.50000000000000E+1
NdTemp 12 32 Fixed 0
-2.50000000000000E+1
NdTemp 12 33 Fixed 0
-2.50000000000000E+1
NdTemp 12 34 Fixed 0
-2.50000000000000E+1
NdTemp 12 35 Fixed 0
-2.50000000000000E+1
NdTemp 12 36 Fixed 0
-2.50000000000000E+1
NdTemp 12 37 Fixed 0
-2.50000000000000E+1
NdTemp 12 38 Fixed 0
-2.50000000000000E+1
NdTemp 12 39 Fixed 0
-2.50000000000000E+1
NdTemp 12 40 Fixed 0
-2.50000000000000E+1
NdTemp 12 41 Fixed 0
-2.50000000000000E+1
NdTemp 12 42 Fixed 0
-2.50000000000000E+1
NdTemp 12 43 Fixed 0
-2.50000000000000E+1
NdTemp 12 44 Fixed 0
-2.50000000000000E+1
NdTemp 12 45 Fixed 0
-2.50000000000000E+1
NdTemp 12 46 Fixed 0
-2.50000000000000E+1
NdTemp 12 47 Fixed 0
-2.50000000000000E+1
NdTemp 12 48 Fixed 0
-2.50000000000000E+1
NdTemp 12 49 Fixed 0
-2.50000000000000E+1
NdTemp 12 50 Fixed 0
-2.50000000000000E+1
NdTemp 12 51 Fixed 0
-2.50000000000000E+1
NdTemp 12 52 Fixed 0
-2.50000000000000E+1
NdTemp 12 53 Fixed 0
-2.50000000000000E+1
NdTemp 12 54 Fixed 0

-2.50000000000000E+1
NdTemp 12 55 Fixed 0
-2.50000000000000E+1
NdTemp 12 56 Fixed 0
-2.50000000000000E+1
NdTemp 12 57 Fixed 0
-2.50000000000000E+1
NdTemp 12 58 Fixed 0
-2.50000000000000E+1
NdTemp 12 59 Fixed 0
-2.50000000000000E+1
NdTemp 12 60 Fixed 0
-2.50000000000000E+1
NdTemp 12 61 Fixed 0
-2.50000000000000E+1
NdTemp 12 62 Fixed 0
-2.50000000000000E+1
NdTemp 12 63 Fixed 0
-2.50000000000000E+1
NdTemp 12 64 Fixed 0
-2.50000000000000E+1
NdTemp 12 65 Fixed 0
-2.50000000000000E+1
NdTemp 12 66 Fixed 0
-2.50000000000000E+1
NdTemp 12 67 Fixed 0
-2.50000000000000E+1
NdTemp 12 68 Fixed 0
-2.50000000000000E+1
NdTemp 12 69 Fixed 0
-2.50000000000000E+1
NdTemp 12 70 Fixed 0
-2.50000000000000E+1
NdTemp 12 71 Fixed 0
-2.50000000000000E+1
NdTemp 12 72 Fixed 0
-2.50000000000000E+1
NdTemp 12 73 Fixed 0
-2.50000000000000E+1
NdTemp 12 74 Fixed 0
-2.50000000000000E+1
NdTemp 12 75 Fixed 0
-2.50000000000000E+1
NdTemp 12 76 Fixed 0
-2.50000000000000E+1
NdTemp 12 77 Fixed 0
-2.50000000000000E+1
NdTemp 12 78 Fixed 0
-2.50000000000000E+1
NdTemp 12 79 Fixed 0
-2.50000000000000E+1
NdTemp 12 80 Fixed 0
-2.50000000000000E+1
NdTemp 12 81 Fixed 0

```
-2.50000000000000E+1
   NdTemp                  12      82      Fixed        0
-2.50000000000000E+1
   NdTemp                  12      83      Fixed        0
-2.50000000000000E+1
   NdTemp                  12      84      Fixed        0
-2.50000000000000E+1
   NdTemp                  12      85      Fixed        0
-2.50000000000000E+1
   NdTemp                  12      86      Fixed        0
-2.50000000000000E+1
   NdTemp                  12      87      Fixed        0
-2.50000000000000E+1
   NdTemp                  12      88      Fixed        0
-2.50000000000000E+1
   NdTemp                  12      89      Fixed        0
-2.50000000000000E+1
   NdTemp                  12      90      Fixed        0
-2.50000000000000E+1
   NdTemp                  12      91      Fixed        0
-2.50000000000000E+1
   NdTemp                  12      92      Fixed        0
-2.50000000000000E+1
   NdTemp                  12      93      Fixed        0
-2.50000000000000E+1
   NdTemp                  12      94      Fixed        0
-2.50000000000000E+1
   NdTemp                  12      95      Fixed        0
-2.50000000000000E+1
   NdTemp                  12      96      Fixed        0
-2.50000000000000E+1
   NdTemp                  12      97      Fixed        0
-2.50000000000000E+1
   NdTemp                  12      98      Fixed        0
-2.50000000000000E+1
   NdTemp                  12      99      Fixed        0
-2.50000000000000E+1
   NdTemp                  12     100      Fixed        0
-2.50000000000000E+1
   NdTemp                  12     101      Fixed        0
-2.50000000000000E+1
   NdTemp                  12     102      Fixed        0
-2.50000000000000E+1
   NdTemp                  12     103      Fixed        0
-2.50000000000000E+1
   NdTemp                  12     104      Fixed        0
-2.50000000000000E+1
   NdTemp                  12     105      Fixed        0
-2.50000000000000E+1
   NdTemp                  12     106      Fixed        0
-2.50000000000000E+1
   NdTemp                  12     107      Fixed        0
-2.50000000000000E+1
   NdTemp                  12     108      Fixed        0
```

-2.50000000000000E+1
NdTemp 12 109 Fixed 0
-2.50000000000000E+1
NdTemp 12 110 Fixed 0
-2.50000000000000E+1
NdTemp 12 111 Fixed 0
-2.50000000000000E+1
NdTemp 12 112 Fixed 0
-2.50000000000000E+1
NdTemp 12 113 Fixed 0
-2.50000000000000E+1
NdTemp 12 114 Fixed 0
-2.50000000000000E+1
NdTemp 12 115 Fixed 0
-2.50000000000000E+1
NdTemp 12 116 Fixed 0
-2.50000000000000E+1
NdTemp 12 117 Fixed 0
-2.50000000000000E+1
NdTemp 12 118 Fixed 0
-2.50000000000000E+1
NdTemp 12 119 Fixed 0
-2.50000000000000E+1
NdTemp 12 120 Fixed 0
-2.50000000000000E+1
NdTemp 12 121 Fixed 0
-2.50000000000000E+1
NdTemp 12 122 Fixed 0
-2.50000000000000E+1
NdTemp 12 123 Fixed 0
-2.50000000000000E+1
NdTemp 12 124 Fixed 0
-2.50000000000000E+1
NdTemp 12 125 Fixed 0
-2.50000000000000E+1
NdTemp 12 126 Fixed 0
-2.50000000000000E+1
NdTemp 12 127 Fixed 0
-2.50000000000000E+1
NdTemp 12 128 Fixed 0
-2.50000000000000E+1
NdTemp 12 129 Fixed 0
-2.50000000000000E+1
NdTemp 12 130 Fixed 0
-2.50000000000000E+1
NdTemp 12 131 Fixed 0
-2.50000000000000E+1
NdTemp 12 132 Fixed 0
-2.50000000000000E+1
NdTemp 12 133 Fixed 0
-2.50000000000000E+1
NdTemp 12 134 Fixed 0
-2.50000000000000E+1
NdTemp 12 135 Fixed 0

-2.50000000000000E+1
NdTemp 12 136 Fixed 0
-2.50000000000000E+1
NdTemp 12 137 Fixed 0
-2.50000000000000E+1
NdTemp 12 138 Fixed 0
-2.50000000000000E+1
NdTemp 12 139 Fixed 0
-2.50000000000000E+1
NdTemp 12 140 Fixed 0
-2.50000000000000E+1
NdTemp 12 141 Fixed 0
-2.50000000000000E+1
NdTemp 12 142 Fixed 0
-2.50000000000000E+1
NdTemp 12 143 Fixed 0
-2.50000000000000E+1
NdTemp 12 144 Fixed 0
-2.50000000000000E+1
NdTemp 12 145 Fixed 0
-2.50000000000000E+1
NdTemp 12 146 Fixed 0
-2.50000000000000E+1
NdTemp 12 147 Fixed 0
-2.50000000000000E+1
NdTemp 12 148 Fixed 0
-2.50000000000000E+1
NdTemp 12 149 Fixed 0
-2.50000000000000E+1
NdTemp 12 150 Fixed 0
-2.50000000000000E+1
NdTemp 12 151 Fixed 0
-2.50000000000000E+1
NdTemp 12 152 Fixed 0
-2.50000000000000E+1
NdTemp 12 153 Fixed 0
-2.50000000000000E+1
NdTemp 12 154 Fixed 0
-2.50000000000000E+1
NdTemp 12 155 Fixed 0
-2.50000000000000E+1
NdTemp 12 156 Fixed 0
-2.50000000000000E+1
NdTemp 12 157 Fixed 0
-2.50000000000000E+1
NdTemp 12 158 Fixed 0
-2.50000000000000E+1
NdTemp 12 159 Fixed 0
-2.50000000000000E+1
NdTemp 12 160 Fixed 0
-2.50000000000000E+1
NdTemp 12 161 Fixed 0
-2.50000000000000E+1
NdTemp 12 162 Fixed 0

-2.50000000000000E+1
NdTemp 12 163 Fixed 0
-2.50000000000000E+1
NdTemp 12 164 Fixed 0
-2.50000000000000E+1
NdTemp 12 165 Fixed 0
-2.50000000000000E+1
NdTemp 12 166 Fixed 0
-2.50000000000000E+1
NdTemp 12 167 Fixed 0
-2.50000000000000E+1
NdTemp 12 168 Fixed 0
-2.50000000000000E+1
NdTemp 12 169 Fixed 0
-2.50000000000000E+1
NdTemp 12 170 Fixed 0
-2.50000000000000E+1
NdTemp 12 171 Fixed 0
-2.50000000000000E+1
NdTemp 12 172 Fixed 0
-2.50000000000000E+1
NdTemp 12 173 Fixed 0
-2.50000000000000E+1
NdTemp 12 174 Fixed 0
-2.50000000000000E+1
NdTemp 12 175 Fixed 0
-2.50000000000000E+1
NdTemp 12 176 Fixed 0
-2.50000000000000E+1
NdTemp 12 177 Fixed 0
-2.50000000000000E+1
NdTemp 12 178 Fixed 0
-2.50000000000000E+1
NdTemp 12 179 Fixed 0
-2.50000000000000E+1
NdTemp 12 180 Fixed 0
-2.50000000000000E+1
NdTemp 12 181 Fixed 0
-2.50000000000000E+1
NdTemp 12 182 Fixed 0
-2.50000000000000E+1
NdTemp 12 183 Fixed 0
-2.50000000000000E+1
NdTemp 12 184 Fixed 0
-2.50000000000000E+1
NdTemp 12 185 Fixed 0
-2.50000000000000E+1
NdTemp 12 186 Fixed 0
-2.50000000000000E+1
NdTemp 12 187 Fixed 0
-2.50000000000000E+1
NdTemp 12 188 Fixed 0
-2.50000000000000E+1
NdTemp 12 189 Fixed 0

-2.50000000000000E+1
NdTemp 12 190 Fixed 0
-2.50000000000000E+1
NdTemp 12 191 Fixed 0
-2.50000000000000E+1
NdTemp 12 192 Fixed 0
-2.50000000000000E+1
NdTemp 12 193 Fixed 0
-2.50000000000000E+1
NdTemp 12 194 Fixed 0
-2.50000000000000E+1
NdTemp 12 195 Fixed 0
-2.50000000000000E+1
NdTemp 12 196 Fixed 0
-2.50000000000000E+1
NdTemp 12 197 Fixed 0
-2.50000000000000E+1
NdTemp 12 198 Fixed 0
-2.50000000000000E+1
NdTemp 12 199 Fixed 0
-2.50000000000000E+1
NdTemp 12 200 Fixed 0
-2.50000000000000E+1
NdTemp 12 201 Fixed 0
-2.50000000000000E+1
NdTemp 12 202 Fixed 0
-2.50000000000000E+1
NdTemp 12 203 Fixed 0
-2.50000000000000E+1
NdTemp 12 204 Fixed 0
-2.50000000000000E+1
NdTemp 12 205 Fixed 0
-2.50000000000000E+1
NdTemp 12 206 Fixed 0
-2.50000000000000E+1
NdTemp 12 207 Fixed 0
-2.50000000000000E+1
NdTemp 12 208 Fixed 0
-2.50000000000000E+1
NdTemp 12 209 Fixed 0
-2.50000000000000E+1
NdTemp 12 210 Fixed 0
-2.50000000000000E+1
NdTemp 12 211 Fixed 0
-2.50000000000000E+1
NdTemp 12 212 Fixed 0
-2.50000000000000E+1
NdTemp 12 213 Fixed 0
-2.50000000000000E+1
NdTemp 12 214 Fixed 0
-2.50000000000000E+1
NdTemp 12 215 Fixed 0
-2.50000000000000E+1
NdTemp 12 216 Fixed 0

-2.50000000000000E+1
NdTemp 12 217 Fixed 0
-2.50000000000000E+1
NdTemp 12 218 Fixed 0
-2.50000000000000E+1
NdTemp 12 219 Fixed 0
-2.50000000000000E+1
NdTemp 12 220 Fixed 0
-2.50000000000000E+1
NdTemp 12 221 Fixed 0
-2.50000000000000E+1
NdTemp 12 222 Fixed 0
-2.50000000000000E+1
NdTemp 12 223 Fixed 0
-2.50000000000000E+1
NdTemp 12 224 Fixed 0
-2.50000000000000E+1
NdTemp 12 225 Fixed 0
-2.50000000000000E+1
NdTemp 12 226 Fixed 0
-2.50000000000000E+1
NdTemp 12 227 Fixed 0
-2.50000000000000E+1
NdTemp 12 228 Fixed 0
-2.50000000000000E+1
NdTemp 12 229 Fixed 0
-2.50000000000000E+1
NdTemp 12 230 Fixed 0
-2.50000000000000E+1
NdTemp 12 231 Fixed 0
-2.50000000000000E+1
NdTemp 12 232 Fixed 0
-2.50000000000000E+1
NdTemp 12 233 Fixed 0
-2.50000000000000E+1
NdTemp 12 234 Fixed 0
-2.50000000000000E+1
NdTemp 12 235 Fixed 0
-2.50000000000000E+1
NdTemp 12 236 Fixed 0
-2.50000000000000E+1
NdTemp 12 237 Fixed 0
-2.50000000000000E+1
NdTemp 12 238 Fixed 0
-2.50000000000000E+1
NdTemp 12 239 Fixed 0
-2.50000000000000E+1
NdTemp 12 240 Fixed 0
-2.50000000000000E+1
NdTemp 12 241 Fixed 0
-2.50000000000000E+1
NdTemp 12 242 Fixed 0
-2.50000000000000E+1
NdTemp 12 243 Fixed 0

-2.50000000000000E+1
NdTemp 12 244 Fixed 0
-2.50000000000000E+1
NdTemp 12 245 Fixed 0
-2.50000000000000E+1
NdTemp 12 246 Fixed 0
-2.50000000000000E+1
NdTemp 12 247 Fixed 0
-2.50000000000000E+1
NdTemp 12 248 Fixed 0
-2.50000000000000E+1
NdTemp 12 249 Fixed 0
-2.50000000000000E+1
NdTemp 12 250 Fixed 0
-2.50000000000000E+1
NdTemp 12 251 Fixed 0
-2.50000000000000E+1
NdTemp 12 252 Fixed 0
-2.50000000000000E+1
NdTemp 12 253 Fixed 0
-2.50000000000000E+1
NdTemp 12 254 Fixed 0
-2.50000000000000E+1
NdTemp 12 255 Fixed 0
-2.50000000000000E+1
NdTemp 12 256 Fixed 0
-2.50000000000000E+1
NdTemp 12 257 Fixed 0
-2.50000000000000E+1
NdTemp 12 258 Fixed 0
-2.50000000000000E+1
NdTemp 12 259 Fixed 0
-2.50000000000000E+1
NdTemp 12 260 Fixed 0
-2.50000000000000E+1
NdTemp 12 261 Fixed 0
-2.50000000000000E+1
NdTemp 12 262 Fixed 0
-2.50000000000000E+1
NdTemp 12 263 Fixed 0
-2.50000000000000E+1
NdTemp 12 264 Fixed 0
-2.50000000000000E+1
NdTemp 12 265 Fixed 0
-2.50000000000000E+1
NdTemp 12 266 Fixed 0
-2.50000000000000E+1
NdTemp 12 267 Fixed 0
-2.50000000000000E+1
NdTemp 12 268 Fixed 0
-2.50000000000000E+1
NdTemp 12 269 Fixed 0
-2.50000000000000E+1
NdTemp 12 270 Fixed 0

-2.50000000000000E+1
NdTemp 12 271 Fixed 0
-2.50000000000000E+1
NdTemp 12 272 Fixed 0
-2.50000000000000E+1
NdTemp 12 273 Fixed 0
-2.50000000000000E+1
NdTemp 12 274 Fixed 0
-2.50000000000000E+1
NdTemp 12 275 Fixed 0
-2.50000000000000E+1
NdTemp 12 276 Fixed 0
-2.50000000000000E+1
NdTemp 12 277 Fixed 0
-2.50000000000000E+1
NdTemp 12 278 Fixed 0
-2.50000000000000E+1
NdTemp 12 279 Fixed 0
-2.50000000000000E+1
NdTemp 12 280 Fixed 0
-2.50000000000000E+1
NdTemp 12 281 Fixed 0
-2.50000000000000E+1
NdTemp 12 282 Fixed 0
-2.50000000000000E+1
NdTemp 12 283 Fixed 0
-2.50000000000000E+1
NdTemp 12 284 Fixed 0
-2.50000000000000E+1
NdTemp 12 285 Fixed 0
-2.50000000000000E+1
NdTemp 12 286 Fixed 0
-2.50000000000000E+1
NdTemp 12 287 Fixed 0
-2.50000000000000E+1
NdTemp 12 288 Fixed 0
-2.50000000000000E+1
NdTemp 12 289 Fixed 0
-2.50000000000000E+1
NdTemp 12 290 Fixed 0
-2.50000000000000E+1
NdTemp 12 291 Fixed 0
-2.50000000000000E+1
NdTemp 12 292 Fixed 0
-2.50000000000000E+1
NdTemp 12 293 Fixed 0
-2.50000000000000E+1
NdTemp 12 294 Fixed 0
-2.50000000000000E+1
NdTemp 12 295 Fixed 0
-2.50000000000000E+1
NdTemp 12 296 Fixed 0
-2.50000000000000E+1
NdTemp 12 297 Fixed 0

-2.50000000000000E+1
NdTemp 12 298 Fixed 0
-2.50000000000000E+1
NdTemp 12 299 Fixed 0
-2.50000000000000E+1
NdTemp 12 300 Fixed 0
-2.50000000000000E+1
NdTemp 12 301 Fixed 0
-2.50000000000000E+1
NdTemp 12 302 Fixed 0
-2.50000000000000E+1
NdTemp 12 303 Fixed 0
-2.50000000000000E+1
NdTemp 12 304 Fixed 0
-2.50000000000000E+1
NdTemp 12 305 Fixed 0
-2.50000000000000E+1
NdTemp 12 306 Fixed 0
-2.50000000000000E+1
NdTemp 12 307 Fixed 0
-2.50000000000000E+1
NdTemp 12 308 Fixed 0
-2.50000000000000E+1
NdTemp 12 309 Fixed 0
-2.50000000000000E+1
NdTemp 12 310 Fixed 0
-2.50000000000000E+1
NdTemp 12 311 Fixed 0
-2.50000000000000E+1
NdTemp 12 312 Fixed 0
-2.50000000000000E+1
NdTemp 12 313 Fixed 0
-2.50000000000000E+1
NdTemp 12 314 Fixed 0
-2.50000000000000E+1
NdTemp 12 315 Fixed 0
-2.50000000000000E+1
NdTemp 12 316 Fixed 0
-2.50000000000000E+1
NdTemp 12 317 Fixed 0
-2.50000000000000E+1
NdTemp 12 318 Fixed 0
-2.50000000000000E+1
NdTemp 12 319 Fixed 0
-2.50000000000000E+1
NdTemp 12 320 Fixed 0
-2.50000000000000E+1
NdTemp 12 321 Fixed 0
-2.50000000000000E+1
NdTemp 12 322 Fixed 0
-2.50000000000000E+1
NdTemp 12 323 Fixed 0
-2.50000000000000E+1
NdTemp 12 324 Fixed 0

-2.50000000000000E+1
NdTemp 12 325 Fixed 0
-2.50000000000000E+1
NdTemp 12 326 Fixed 0
-2.50000000000000E+1
NdTemp 12 327 Fixed 0
-2.50000000000000E+1
NdTemp 12 328 Fixed 0
-2.50000000000000E+1
NdTemp 12 329 Fixed 0
-2.50000000000000E+1
NdTemp 12 330 Fixed 0
-2.50000000000000E+1
NdTemp 12 331 Fixed 0
-2.50000000000000E+1
NdTemp 12 332 Fixed 0
-2.50000000000000E+1
NdTemp 12 333 Fixed 0
-2.50000000000000E+1
NdTemp 12 334 Fixed 0
-2.50000000000000E+1
NdTemp 12 335 Fixed 0
-2.50000000000000E+1
NdTemp 12 336 Fixed 0
-2.50000000000000E+1
NdTemp 12 337 Fixed 0
-2.50000000000000E+1
NdTemp 12 338 Fixed 0
-2.50000000000000E+1
NdTemp 12 339 Fixed 0
-2.50000000000000E+1
NdTemp 12 340 Fixed 0
-2.50000000000000E+1
NdTemp 12 341 Fixed 0
-2.50000000000000E+1
NdTemp 12 342 Fixed 0
-2.50000000000000E+1
NdTemp 12 343 Fixed 0
-2.50000000000000E+1
NdTemp 12 344 Fixed 0
-2.50000000000000E+1
NdTemp 12 345 Fixed 0
-2.50000000000000E+1
NdTemp 12 346 Fixed 0
-2.50000000000000E+1
NdTemp 12 347 Fixed 0
-2.50000000000000E+1
NdTemp 12 348 Fixed 0
-2.50000000000000E+1
NdTemp 12 349 Fixed 0
-2.50000000000000E+1
NdTemp 12 350 Fixed 0
-2.50000000000000E+1
NdTemp 12 351 Fixed 0

-2.50000000000000E+1
NdTemp 12 352 Fixed 0
-2.50000000000000E+1
NdTemp 12 353 Fixed 0
-2.50000000000000E+1
NdTemp 12 354 Fixed 0
-2.50000000000000E+1
NdTemp 12 355 Fixed 0
-2.50000000000000E+1
NdTemp 12 356 Fixed 0
-2.50000000000000E+1
NdTemp 12 357 Fixed 0
-2.50000000000000E+1
NdTemp 12 358 Fixed 0
-2.50000000000000E+1
NdTemp 12 359 Fixed 0
-2.50000000000000E+1
NdTemp 12 360 Fixed 0
-2.50000000000000E+1
NdTemp 12 361 Fixed 0
-2.50000000000000E+1
NdTemp 12 362 Fixed 0
-2.50000000000000E+1
NdTemp 12 363 Fixed 0
-2.50000000000000E+1
NdTemp 12 364 Fixed 0
-2.50000000000000E+1
NdTemp 12 365 Fixed 0
-2.50000000000000E+1
NdTemp 12 366 Fixed 0
-2.50000000000000E+1
NdTemp 12 367 Fixed 0
-2.50000000000000E+1
NdTemp 12 368 Fixed 0
-2.50000000000000E+1
NdTemp 12 369 Fixed 0
-2.50000000000000E+1
NdTemp 12 370 Fixed 0
-2.50000000000000E+1
NdTemp 12 371 Fixed 0
-2.50000000000000E+1
NdTemp 12 372 Fixed 0
-2.50000000000000E+1
NdTemp 12 373 Fixed 0
-2.50000000000000E+1
NdTemp 12 374 Fixed 0
-2.50000000000000E+1
NdTemp 12 375 Fixed 0
-2.50000000000000E+1
NdTemp 12 376 Fixed 0
-2.50000000000000E+1
NdTemp 12 377 Fixed 0
-2.50000000000000E+1
NdTemp 12 378 Fixed 0

-2.50000000000000E+1
NdTemp 12 379 Fixed 0
-2.50000000000000E+1
NdTemp 12 380 Fixed 0
-2.50000000000000E+1
NdTemp 12 381 Fixed 0
-2.50000000000000E+1
NdTemp 12 382 Fixed 0
-2.50000000000000E+1
NdTemp 12 383 Fixed 0
-2.50000000000000E+1
NdTemp 12 384 Fixed 0
-2.50000000000000E+1
NdTemp 12 385 Fixed 0
-2.50000000000000E+1
NdTemp 12 386 Fixed 0
-2.50000000000000E+1
NdTemp 12 387 Fixed 0
-2.50000000000000E+1
NdTemp 12 388 Fixed 0
-2.50000000000000E+1
NdTemp 12 389 Fixed 0
-2.50000000000000E+1
NdTemp 12 390 Fixed 0
-2.50000000000000E+1
NdTemp 12 391 Fixed 0
-2.50000000000000E+1
NdTemp 12 392 Fixed 0
-2.50000000000000E+1
NdTemp 12 393 Fixed 0
-2.50000000000000E+1
NdTemp 12 394 Fixed 0
-2.50000000000000E+1
NdTemp 12 395 Fixed 0
-2.50000000000000E+1
NdTemp 12 396 Fixed 0
-2.50000000000000E+1
NdTemp 12 397 Fixed 0
-2.50000000000000E+1
NdTemp 12 398 Fixed 0
-2.50000000000000E+1
NdTemp 12 399 Fixed 0
-2.50000000000000E+1
NdTemp 12 400 Fixed 0
-2.50000000000000E+1
NdTemp 12 401 Fixed 0
-2.50000000000000E+1
NdTemp 12 402 Fixed 0
-2.50000000000000E+1
NdTemp 12 403 Fixed 0
-2.50000000000000E+1
NdTemp 12 404 Fixed 0
-2.50000000000000E+1
NdTemp 12 405 Fixed 0

-2.50000000000000E+1
NdTemp 12 406 Fixed 0
-2.50000000000000E+1
NdTemp 12 407 Fixed 0
-2.50000000000000E+1
NdTemp 12 408 Fixed 0
-2.50000000000000E+1
NdTemp 12 409 Fixed 0
-2.50000000000000E+1
NdTemp 12 410 Fixed 0
-2.50000000000000E+1
NdTemp 12 411 Fixed 0
-2.50000000000000E+1
NdTemp 12 412 Fixed 0
-2.50000000000000E+1
NdTemp 12 413 Fixed 0
-2.50000000000000E+1
NdTemp 12 414 Fixed 0
-2.50000000000000E+1
NdTemp 12 415 Fixed 0
-2.50000000000000E+1
NdTemp 12 416 Fixed 0
-2.50000000000000E+1
NdTemp 12 417 Fixed 0
-2.50000000000000E+1
NdTemp 12 418 Fixed 0
-2.50000000000000E+1
NdTemp 12 419 Fixed 0
-2.50000000000000E+1
NdTemp 12 420 Fixed 0
-2.50000000000000E+1
NdTemp 12 421 Fixed 0
-2.50000000000000E+1
NdTemp 12 422 Fixed 0
-2.50000000000000E+1
NdTemp 12 423 Fixed 0
-2.50000000000000E+1
NdTemp 12 424 Fixed 0
-2.50000000000000E+1
NdTemp 12 425 Fixed 0
-2.50000000000000E+1
NdTemp 12 426 Fixed 0
-2.50000000000000E+1
NdTemp 12 427 Fixed 0
-2.50000000000000E+1
NdTemp 12 428 Fixed 0
-2.50000000000000E+1
NdTemp 12 429 Fixed 0
-2.50000000000000E+1
NdTemp 12 430 Fixed 0
-2.50000000000000E+1
NdTemp 12 431 Fixed 0
-2.50000000000000E+1
NdTemp 12 432 Fixed 0

-2.50000000000000E+1
NdTemp 12 433 Fixed 0
-2.50000000000000E+1
NdTemp 12 434 Fixed 0
-2.50000000000000E+1
NdTemp 12 435 Fixed 0
-2.50000000000000E+1
NdTemp 12 436 Fixed 0
-2.50000000000000E+1
NdTemp 12 437 Fixed 0
-2.50000000000000E+1
NdTemp 12 438 Fixed 0
-2.50000000000000E+1
NdTemp 12 439 Fixed 0
-2.50000000000000E+1
NdTemp 12 440 Fixed 0
-2.50000000000000E+1
NdTemp 12 441 Fixed 0
-2.50000000000000E+1
NdTemp 12 442 Fixed 0
-2.50000000000000E+1
NdTemp 12 443 Fixed 0
-2.50000000000000E+1
NdTemp 12 444 Fixed 0
-2.50000000000000E+1
NdTemp 12 445 Fixed 0
-2.50000000000000E+1
NdTemp 12 446 Fixed 0
-2.50000000000000E+1
NdTemp 12 447 Fixed 0
-2.50000000000000E+1
NdTemp 12 448 Fixed 0
-2.50000000000000E+1
NdTemp 12 449 Fixed 0
-2.50000000000000E+1
NdTemp 12 450 Fixed 0
-2.50000000000000E+1
NdTemp 12 451 Fixed 0
-2.50000000000000E+1
NdTemp 12 452 Fixed 0
-2.50000000000000E+1
NdTemp 12 453 Fixed 0
-2.50000000000000E+1
NdTemp 12 454 Fixed 0
-2.50000000000000E+1
NdTemp 12 455 Fixed 0
-2.50000000000000E+1
NdTemp 12 456 Fixed 0
-2.50000000000000E+1
NdTemp 12 457 Fixed 0
-2.50000000000000E+1
NdTemp 12 458 Fixed 0
-2.50000000000000E+1
NdTemp 12 459 Fixed 0

-2.50000000000000E+1
NdTemp 12 460 Fixed 0
-2.50000000000000E+1
NdTemp 12 461 Fixed 0
-2.50000000000000E+1
NdTemp 12 462 Fixed 0
-2.50000000000000E+1
NdTemp 12 463 Fixed 0
-2.50000000000000E+1
NdTemp 12 464 Fixed 0
-2.50000000000000E+1
NdTemp 12 465 Fixed 0
-2.50000000000000E+1
NdTemp 12 466 Fixed 0
-2.50000000000000E+1
NdTemp 12 467 Fixed 0
-2.50000000000000E+1
NdTemp 12 468 Fixed 0
-2.50000000000000E+1
NdTemp 12 469 Fixed 0
-2.50000000000000E+1
NdTemp 12 470 Fixed 0
-2.50000000000000E+1
NdTemp 12 471 Fixed 0
-2.50000000000000E+1
NdTemp 12 472 Fixed 0
-2.50000000000000E+1
NdTemp 12 473 Fixed 0
-2.50000000000000E+1
NdTemp 12 474 Fixed 0
-2.50000000000000E+1
NdTemp 12 475 Fixed 0
-2.50000000000000E+1
NdTemp 12 476 Fixed 0
-2.50000000000000E+1
NdTemp 12 477 Fixed 0
-2.50000000000000E+1
NdTemp 12 478 Fixed 0
-2.50000000000000E+1
NdTemp 12 479 Fixed 0
-2.50000000000000E+1
NdTemp 12 480 Fixed 0
-2.50000000000000E+1
NdTemp 12 481 Fixed 0
-2.50000000000000E+1
NdTemp 12 482 Fixed 0
-2.50000000000000E+1
NdTemp 12 483 Fixed 0
-2.50000000000000E+1
NdTemp 12 484 Fixed 0
-2.50000000000000E+1
NdTemp 12 485 Fixed 0
-2.50000000000000E+1
NdTemp 12 486 Fixed 0

-2.50000000000000E+1
NdTemp 12 487 Fixed 0
-2.50000000000000E+1
NdTemp 12 488 Fixed 0
-2.50000000000000E+1
NdTemp 12 489 Fixed 0
-2.50000000000000E+1
NdTemp 12 490 Fixed 0
-2.50000000000000E+1
NdTemp 12 491 Fixed 0
-2.50000000000000E+1
NdTemp 12 492 Fixed 0
-2.50000000000000E+1
NdTemp 12 493 Fixed 0
-2.50000000000000E+1
NdTemp 12 494 Fixed 0
-2.50000000000000E+1
NdTemp 12 495 Fixed 0
-2.50000000000000E+1
NdTemp 12 496 Fixed 0
-2.50000000000000E+1
NdTemp 12 497 Fixed 0
-2.50000000000000E+1
NdTemp 12 498 Fixed 0
-2.50000000000000E+1
NdTemp 12 499 Fixed 0
-2.50000000000000E+1
NdTemp 12 500 Fixed 0
-2.50000000000000E+1
NdTemp 12 501 Fixed 0
-2.50000000000000E+1
NdTemp 12 502 Fixed 0
-2.50000000000000E+1
NdTemp 12 503 Fixed 0
-2.50000000000000E+1
NdTemp 12 504 Fixed 0
-2.50000000000000E+1
NdTemp 12 505 Fixed 0
-2.50000000000000E+1
NdTemp 12 506 Fixed 0
-2.50000000000000E+1
NdTemp 12 507 Fixed 0
-2.50000000000000E+1
NdTemp 12 508 Fixed 0
-2.50000000000000E+1
NdTemp 12 509 Fixed 0
-2.50000000000000E+1
NdTemp 12 510 Fixed 0
-2.50000000000000E+1
NdTemp 12 511 Fixed 0
-2.50000000000000E+1
NdTemp 12 512 Fixed 0
-2.50000000000000E+1
NdTemp 12 513 Fixed 0

-2.50000000000000E+1
NdTemp 12 514 Fixed 0
-2.50000000000000E+1
NdTemp 12 515 Fixed 0
-2.50000000000000E+1
NdTemp 12 516 Fixed 0
-2.50000000000000E+1
NdTemp 12 517 Fixed 0
-2.50000000000000E+1
NdTemp 12 518 Fixed 0
-2.50000000000000E+1
NdTemp 12 519 Fixed 0
-2.50000000000000E+1
NdTemp 12 520 Fixed 0
-2.50000000000000E+1
NdTemp 12 521 Fixed 0
-2.50000000000000E+1
NdTemp 12 522 Fixed 0
-2.50000000000000E+1
NdTemp 12 523 Fixed 0
-2.50000000000000E+1
NdTemp 12 524 Fixed 0
-2.50000000000000E+1
NdTemp 12 525 Fixed 0
-2.50000000000000E+1
NdTemp 12 526 Fixed 0
-2.50000000000000E+1
NdTemp 12 527 Fixed 0
-2.50000000000000E+1
NdTemp 12 528 Fixed 0
-2.50000000000000E+1
NdTemp 12 529 Fixed 0
-2.50000000000000E+1
NdTemp 12 530 Fixed 0
-2.50000000000000E+1
NdTemp 12 531 Fixed 0
-2.50000000000000E+1
NdTemp 12 532 Fixed 0
-2.50000000000000E+1
NdTemp 12 533 Fixed 0
-2.50000000000000E+1
NdTemp 12 534 Fixed 0
-2.50000000000000E+1
NdTemp 12 535 Fixed 0
-2.50000000000000E+1
NdTemp 12 536 Fixed 0
-2.50000000000000E+1
NdTemp 12 537 Fixed 0
-2.50000000000000E+1
NdTemp 12 538 Fixed 0
-2.50000000000000E+1
NdTemp 12 539 Fixed 0
-2.50000000000000E+1
NdTemp 12 540 Fixed 0

-2.50000000000000E+1
NdTemp 12 541 Fixed 0
-2.50000000000000E+1
NdTemp 12 542 Fixed 0
-2.50000000000000E+1
NdTemp 12 543 Fixed 0
-2.50000000000000E+1
NdTemp 12 544 Fixed 0
-2.50000000000000E+1
NdTemp 12 545 Fixed 0
-2.50000000000000E+1
NdTemp 12 546 Fixed 0
-2.50000000000000E+1
NdTemp 12 547 Fixed 0
-2.50000000000000E+1
NdTemp 12 548 Fixed 0
-2.50000000000000E+1
NdTemp 12 549 Fixed 0
-2.50000000000000E+1
NdTemp 12 550 Fixed 0
-2.50000000000000E+1
NdTemp 12 551 Fixed 0
-2.50000000000000E+1
NdTemp 12 552 Fixed 0
-2.50000000000000E+1
NdTemp 12 553 Fixed 0
-2.50000000000000E+1
NdTemp 12 554 Fixed 0
-2.50000000000000E+1
NdTemp 12 555 Fixed 0
-2.50000000000000E+1
NdTemp 12 556 Fixed 0
-2.50000000000000E+1
NdTemp 12 557 Fixed 0
-2.50000000000000E+1
NdTemp 12 558 Fixed 0
-2.50000000000000E+1
NdTemp 12 559 Fixed 0
-2.50000000000000E+1
NdTemp 12 560 Fixed 0
-2.50000000000000E+1
NdTemp 12 561 Fixed 0
-2.50000000000000E+1
NdTemp 12 562 Fixed 0
-2.50000000000000E+1
NdTemp 12 563 Fixed 0
-2.50000000000000E+1
NdTemp 12 564 Fixed 0
-2.50000000000000E+1
NdTemp 12 565 Fixed 0
-2.50000000000000E+1
NdTemp 12 566 Fixed 0
-2.50000000000000E+1
NdTemp 12 567 Fixed 0

-2.50000000000000E+1
NdTemp 12 568 Fixed 0
-2.50000000000000E+1
NdTemp 12 569 Fixed 0
-2.50000000000000E+1
NdTemp 12 570 Fixed 0
-2.50000000000000E+1
NdTemp 12 571 Fixed 0
-2.50000000000000E+1
NdTemp 12 572 Fixed 0
-2.50000000000000E+1
NdTemp 12 573 Fixed 0
-2.50000000000000E+1
NdTemp 12 574 Fixed 0
-2.50000000000000E+1
NdTemp 12 575 Fixed 0
-2.50000000000000E+1
NdTemp 12 576 Fixed 0
-2.50000000000000E+1
NdTemp 12 577 Fixed 0
-2.50000000000000E+1
NdTemp 12 578 Fixed 0
-2.50000000000000E+1
NdTemp 12 579 Fixed 0
-2.50000000000000E+1
NdTemp 12 580 Fixed 0
-2.50000000000000E+1
NdTemp 12 581 Fixed 0
-2.50000000000000E+1
NdTemp 12 582 Fixed 0
-2.50000000000000E+1
NdTemp 12 583 Fixed 0
-2.50000000000000E+1
NdTemp 12 584 Fixed 0
-2.50000000000000E+1
NdTemp 12 585 Fixed 0
-2.50000000000000E+1
NdTemp 12 586 Fixed 0
-2.50000000000000E+1
NdTemp 12 587 Fixed 0
-2.50000000000000E+1
NdTemp 12 588 Fixed 0
-2.50000000000000E+1
NdTemp 12 589 Fixed 0
-2.50000000000000E+1
NdTemp 12 590 Fixed 0
-2.50000000000000E+1
NdTemp 12 591 Fixed 0
-2.50000000000000E+1
NdTemp 12 592 Fixed 0
-2.50000000000000E+1
NdTemp 12 593 Fixed 0
-2.50000000000000E+1
NdTemp 12 594 Fixed 0

-2.50000000000000E+1
NdTemp 12 595 Fixed 0
-2.50000000000000E+1
NdTemp 12 596 Fixed 0
-2.50000000000000E+1
NdTemp 12 597 Fixed 0
-2.50000000000000E+1
NdTemp 12 598 Fixed 0
-2.50000000000000E+1
NdTemp 12 599 Fixed 0
-2.50000000000000E+1
NdTemp 12 600 Fixed 0
-2.50000000000000E+1
NdTemp 12 601 Fixed 0
-2.50000000000000E+1
NdTemp 12 602 Fixed 0
-2.50000000000000E+1
NdTemp 12 603 Fixed 0
-2.50000000000000E+1
NdTemp 12 604 Fixed 0
-2.50000000000000E+1
NdTemp 12 605 Fixed 0
-2.50000000000000E+1
NdTemp 12 606 Fixed 0
-2.50000000000000E+1
NdTemp 12 607 Fixed 0
-2.50000000000000E+1
NdTemp 12 608 Fixed 0
-2.50000000000000E+1
NdTemp 12 609 Fixed 0
-2.50000000000000E+1
NdTemp 12 610 Fixed 0
-2.50000000000000E+1
NdTemp 12 611 Fixed 0
-2.50000000000000E+1
NdTemp 12 612 Fixed 0
-2.50000000000000E+1
NdTemp 12 613 Fixed 0
-2.50000000000000E+1
NdTemp 12 614 Fixed 0
-2.50000000000000E+1
NdTemp 12 615 Fixed 0
-2.50000000000000E+1
NdTemp 12 616 Fixed 0
-2.50000000000000E+1
NdTemp 12 617 Fixed 0
-2.50000000000000E+1
NdTemp 12 618 Fixed 0
-2.50000000000000E+1
NdTemp 12 619 Fixed 0
-2.50000000000000E+1
NdTemp 12 620 Fixed 0
-2.50000000000000E+1
NdTemp 12 621 Fixed 0

-2.50000000000000E+1
NdTemp 12 622 Fixed 0
-2.50000000000000E+1
NdTemp 12 623 Fixed 0
-2.50000000000000E+1
NdTemp 12 624 Fixed 0
-2.50000000000000E+1
NdTemp 12 625 Fixed 0
-2.50000000000000E+1
NdTemp 12 626 Fixed 0
-2.50000000000000E+1
NdTemp 12 627 Fixed 0
-2.50000000000000E+1
NdTemp 12 628 Fixed 0
-2.50000000000000E+1
NdTemp 12 629 Fixed 0
-2.50000000000000E+1
NdTemp 12 630 Fixed 0
-2.50000000000000E+1
NdTemp 12 631 Fixed 0
-2.50000000000000E+1
NdTemp 12 632 Fixed 0
-2.50000000000000E+1
NdTemp 12 633 Fixed 0
-2.50000000000000E+1
NdTemp 12 634 Fixed 0
-2.50000000000000E+1
NdTemp 12 635 Fixed 0
-2.50000000000000E+1
NdTemp 12 636 Fixed 0
-2.50000000000000E+1
NdTemp 12 637 Fixed 0
-2.50000000000000E+1
NdTemp 12 638 Fixed 0
-2.50000000000000E+1
NdTemp 12 639 Fixed 0
-2.50000000000000E+1
NdTemp 12 640 Fixed 0
-2.50000000000000E+1
NdTemp 12 641 Fixed 0
-2.50000000000000E+1
NdTemp 12 642 Fixed 0
-2.50000000000000E+1
NdTemp 12 643 Fixed 0
-2.50000000000000E+1
NdTemp 12 644 Fixed 0
-2.50000000000000E+1
NdTemp 12 645 Fixed 0
-2.50000000000000E+1
NdTemp 12 646 Fixed 0
-2.50000000000000E+1
NdTemp 12 647 Fixed 0
-2.50000000000000E+1
NdTemp 12 648 Fixed 0

-2.50000000000000E+1
NdTemp 12 649 Fixed 0
-2.50000000000000E+1
NdTemp 12 650 Fixed 0
-2.50000000000000E+1
NdTemp 12 651 Fixed 0
-2.50000000000000E+1
NdTemp 12 652 Fixed 0
-2.50000000000000E+1
NdTemp 12 653 Fixed 0
-2.50000000000000E+1
NdTemp 12 654 Fixed 0
-2.50000000000000E+1
NdTemp 12 655 Fixed 0
-2.50000000000000E+1
NdTemp 12 656 Fixed 0
-2.50000000000000E+1
NdTemp 12 657 Fixed 0
-2.50000000000000E+1
NdTemp 12 658 Fixed 0
-2.50000000000000E+1
NdTemp 12 659 Fixed 0
-2.50000000000000E+1
NdTemp 12 660 Fixed 0
-2.50000000000000E+1
NdTemp 12 661 Fixed 0
-2.50000000000000E+1
NdTemp 12 662 Fixed 0
-2.50000000000000E+1
NdTemp 12 663 Fixed 0
-2.50000000000000E+1
NdTemp 12 664 Fixed 0
-2.50000000000000E+1
NdTemp 12 665 Fixed 0
-2.50000000000000E+1
NdTemp 12 666 Fixed 0
-2.50000000000000E+1
NdTemp 12 667 Fixed 0
-2.50000000000000E+1
NdTemp 12 668 Fixed 0
-2.50000000000000E+1
NdTemp 12 669 Fixed 0
-2.50000000000000E+1
NdTemp 12 670 Fixed 0
-2.50000000000000E+1
NdTemp 12 671 Fixed 0
-2.50000000000000E+1
NdTemp 12 672 Fixed 0
-2.50000000000000E+1
NdTemp 12 673 Fixed 0
-2.50000000000000E+1
NdTemp 12 674 Fixed 0
-2.50000000000000E+1
NdTemp 12 675 Fixed 0

-2.50000000000000E+1
NdTemp 12 676 Fixed 0
-2.50000000000000E+1
NdTemp 12 677 Fixed 0
-2.50000000000000E+1
NdTemp 12 678 Fixed 0
-2.50000000000000E+1
NdTemp 12 679 Fixed 0
-2.50000000000000E+1
NdTemp 12 680 Fixed 0
-2.50000000000000E+1
NdTemp 12 681 Fixed 0
-2.50000000000000E+1
NdTemp 12 682 Fixed 0
-2.50000000000000E+1
NdTemp 12 683 Fixed 0
-2.50000000000000E+1
NdTemp 12 684 Fixed 0
-2.50000000000000E+1
NdTemp 12 685 Fixed 0
-2.50000000000000E+1
NdTemp 12 686 Fixed 0
-2.50000000000000E+1
NdTemp 12 687 Fixed 0
-2.50000000000000E+1
NdTemp 12 688 Fixed 0
-2.50000000000000E+1
NdTemp 12 689 Fixed 0
-2.50000000000000E+1
NdTemp 12 690 Fixed 0
-2.50000000000000E+1
NdTemp 12 691 Fixed 0
-2.50000000000000E+1
NdTemp 12 692 Fixed 0
-2.50000000000000E+1
NdTemp 12 693 Fixed 0
-2.50000000000000E+1
NdTemp 12 694 Fixed 0
-2.50000000000000E+1
NdTemp 12 695 Fixed 0
-2.50000000000000E+1
NdTemp 12 696 Fixed 0
-2.50000000000000E+1
NdTemp 12 697 Fixed 0
-2.50000000000000E+1
NdTemp 12 698 Fixed 0
-2.50000000000000E+1
NdTemp 12 699 Fixed 0
-2.50000000000000E+1
NdTemp 12 700 Fixed 0
-2.50000000000000E+1
NdTemp 12 701 Fixed 0
-2.50000000000000E+1
NdTemp 12 702 Fixed 0

-2.50000000000000E+1
NdTemp 12 703 Fixed 0
-2.50000000000000E+1
NdTemp 12 704 Fixed 0
-2.50000000000000E+1
NdTemp 12 705 Fixed 0
-2.50000000000000E+1
NdTemp 12 706 Fixed 0
-2.50000000000000E+1
NdTemp 12 707 Fixed 0
-2.50000000000000E+1
NdTemp 12 708 Fixed 0
-2.50000000000000E+1
NdTemp 12 709 Fixed 0
-2.50000000000000E+1
NdTemp 12 710 Fixed 0
-2.50000000000000E+1
NdTemp 12 711 Fixed 0
-2.50000000000000E+1
NdTemp 12 712 Fixed 0
-2.50000000000000E+1
NdTemp 12 713 Fixed 0
-2.50000000000000E+1
NdTemp 12 714 Fixed 0
-2.50000000000000E+1
NdTemp 12 715 Fixed 0
-2.50000000000000E+1
NdTemp 12 716 Fixed 0
-2.50000000000000E+1
NdTemp 12 717 Fixed 0
-2.50000000000000E+1
NdTemp 12 718 Fixed 0
-2.50000000000000E+1
NdTemp 12 719 Fixed 0
-2.50000000000000E+1
NdTemp 12 720 Fixed 0
-2.50000000000000E+1
NdTemp 12 721 Fixed 0
-2.50000000000000E+1
NdTemp 12 722 Fixed 0
-2.50000000000000E+1
NdTemp 12 723 Fixed 0
-2.50000000000000E+1
NdTemp 12 724 Fixed 0
-2.50000000000000E+1
NdTemp 12 725 Fixed 0
-2.50000000000000E+1
NdTemp 12 726 Fixed 0
-2.50000000000000E+1
NdTemp 12 727 Fixed 0
-2.50000000000000E+1
NdTemp 12 728 Fixed 0
-2.50000000000000E+1
NdTemp 12 729 Fixed 0

-2.50000000000000E+1
NdTemp 12 730 Fixed 0
-2.50000000000000E+1
NdTemp 12 731 Fixed 0
-2.50000000000000E+1
NdTemp 12 732 Fixed 0
-2.50000000000000E+1
NdTemp 12 733 Fixed 0
-2.50000000000000E+1
NdTemp 12 734 Fixed 0
-2.50000000000000E+1
NdTemp 12 735 Fixed 0
-2.50000000000000E+1
NdTemp 12 736 Fixed 0
-2.50000000000000E+1
NdTemp 12 737 Fixed 0
-2.50000000000000E+1
NdTemp 12 738 Fixed 0
-2.50000000000000E+1
NdTemp 12 739 Fixed 0
-2.50000000000000E+1
NdTemp 12 740 Fixed 0
-2.50000000000000E+1
NdTemp 12 741 Fixed 0
-2.50000000000000E+1
NdTemp 12 742 Fixed 0
-2.50000000000000E+1
NdTemp 12 743 Fixed 0
-2.50000000000000E+1
NdTemp 12 744 Fixed 0
-2.50000000000000E+1
NdTemp 12 745 Fixed 0
-2.50000000000000E+1
NdTemp 12 746 Fixed 0
-2.50000000000000E+1
NdTemp 12 747 Fixed 0
-2.50000000000000E+1
NdTemp 12 748 Fixed 0
-2.50000000000000E+1
NdTemp 12 749 Fixed 0
-2.50000000000000E+1
NdTemp 12 750 Fixed 0
-2.50000000000000E+1
NdTemp 12 751 Fixed 0
-2.50000000000000E+1
NdTemp 12 752 Fixed 0
-2.50000000000000E+1
NdTemp 12 753 Fixed 0
-2.50000000000000E+1
NdTemp 12 754 Fixed 0
-2.50000000000000E+1
NdTemp 12 755 Fixed 0
-2.50000000000000E+1
NdTemp 12 756 Fixed 0

-2.50000000000000E+1
NdTemp 12 757 Fixed 0
-2.50000000000000E+1
NdTemp 12 758 Fixed 0
-2.50000000000000E+1
NdTemp 12 759 Fixed 0
-2.50000000000000E+1
NdTemp 12 760 Fixed 0
-2.50000000000000E+1
NdTemp 12 761 Fixed 0
-2.50000000000000E+1
NdTemp 12 762 Fixed 0
-2.50000000000000E+1
NdTemp 12 763 Fixed 0
-2.50000000000000E+1
NdTemp 12 764 Fixed 0
-2.50000000000000E+1
NdTemp 12 765 Fixed 0
-2.50000000000000E+1
NdTemp 12 766 Fixed 0
-2.50000000000000E+1
NdTemp 12 767 Fixed 0
-2.50000000000000E+1
NdTemp 12 768 Fixed 0
-2.50000000000000E+1
NdTemp 12 769 Fixed 0
-2.50000000000000E+1
NdTemp 12 770 Fixed 0
-2.50000000000000E+1
NdTemp 12 771 Fixed 0
-2.50000000000000E+1
NdTemp 12 772 Fixed 0
-2.50000000000000E+1
NdTemp 12 773 Fixed 0
-2.50000000000000E+1
NdTemp 12 774 Fixed 0
-2.50000000000000E+1
NdTemp 12 775 Fixed 0
-2.50000000000000E+1
NdTemp 12 776 Fixed 0
-2.50000000000000E+1
NdTemp 12 777 Fixed 0
-2.50000000000000E+1
NdTemp 12 778 Fixed 0
-2.50000000000000E+1
NdTemp 12 779 Fixed 0
-2.50000000000000E+1
NdTemp 12 780 Fixed 0
-2.50000000000000E+1
NdTemp 12 781 Fixed 0
-2.50000000000000E+1
NdTemp 12 782 Fixed 0
-2.50000000000000E+1
NdTemp 12 783 Fixed 0

-2.50000000000000E+1
NdTemp 12 784 Fixed 0
-2.50000000000000E+1
NdTemp 12 785 Fixed 0
-2.50000000000000E+1
NdTemp 12 786 Fixed 0
-2.50000000000000E+1
NdTemp 12 787 Fixed 0
-2.50000000000000E+1
NdTemp 12 788 Fixed 0
-2.50000000000000E+1
NdTemp 12 789 Fixed 0
-2.50000000000000E+1
NdTemp 12 790 Fixed 0
-2.50000000000000E+1
NdTemp 12 791 Fixed 0
-2.50000000000000E+1
NdTemp 12 792 Fixed 0
-2.50000000000000E+1
NdTemp 12 793 Fixed 0
-2.50000000000000E+1
NdTemp 12 794 Fixed 0
-2.50000000000000E+1
NdTemp 12 795 Fixed 0
-2.50000000000000E+1
NdTemp 12 796 Fixed 0
-2.50000000000000E+1
NdTemp 12 797 Fixed 0
-2.50000000000000E+1
NdTemp 12 798 Fixed 0
-2.50000000000000E+1
NdTemp 12 799 Fixed 0
-2.50000000000000E+1
NdTemp 12 800 Fixed 0
-2.50000000000000E+1
NdTemp 12 801 Fixed 0
-2.50000000000000E+1
NdTemp 12 802 Fixed 0
-2.50000000000000E+1
NdTemp 12 803 Fixed 0
-2.50000000000000E+1
NdTemp 12 804 Fixed 0
-2.50000000000000E+1
NdTemp 12 805 Fixed 0
-2.50000000000000E+1
NdTemp 12 806 Fixed 0
-2.50000000000000E+1
NdTemp 12 807 Fixed 0
-2.50000000000000E+1
NdTemp 12 808 Fixed 0
-2.50000000000000E+1
NdTemp 12 809 Fixed 0
-2.50000000000000E+1
NdTemp 12 810 Fixed 0

```
-2.50000000000000E+1
   NdTemp                  12     811      Fixed        0
-2.50000000000000E+1
   NdTemp                  12     812      Fixed        0
-2.50000000000000E+1
   NdTemp                  12     813      Fixed        0
-2.50000000000000E+1
   NdTemp                  12     814      Fixed        0
-2.50000000000000E+1
   NdTemp                  12     815      Fixed        0
-2.50000000000000E+1
   NdTemp                  12     816      Fixed        0
-2.50000000000000E+1
   NdTemp                  12     817      Fixed        0
-2.50000000000000E+1
   NdTemp                  12     818      Fixed        0
-2.50000000000000E+1

/ ____________________________________________________________________________
/ BEAM PROPERTIES

   BeamProp                 1    16737843   "Trave_Principale"
     MaterialName       "Structural Steelwork (AS 4100-1998) - Modified"
     Modulus              2.06000000000000E+5
     ShearMod             1.52000000000000E+6
     Poisson              3.00000000000000E-1
     UsePoisson         FALSE
     Density              9.00000000000000E+3
     Expansion            1.17000000000000E-5
     ThermalCond          5.40000000000000E+1
     SpecificHeat         4.65000000000000E+2
     InstantAlpha       FALSE
     Area                 6.64000000000000E-2
     MomentI11            2.23346133330000E-2
     MomentI22            8.34213333000000E-4
     MomentJ              2.48533330000000E-5
     ShearArea1           3.62274792170000E-2
     ShearArea2           2.76045816560000E-2
     SectionType        IBeam
       B1                 5.00000000000000E-1
       B2                 5.00000000000000E-1
       D                  1.40000000000000E+0
       T1                 4.00000000000000E-2
       T2                 4.00000000000000E-2
       T3                 2.00000000000000E-2
       CT               FALSE
     TimeDependentMod   Elastic
     UseMomCurv         FALSE
     NonLinType         Elasticplastic
     Hardening          Isotropic

   BeamProp                 2     3375359   "Traversi"
     MaterialName       "Structural Steelwork (AS 4100-1998) - Modified"
     Modulus              2.06000000000000E+5
```

```
  ShearMod             8.00000000000000E+4
  Poisson              3.00000000000000E-1
  UsePoisson         TRUE
  Density              9.00000000000000E+3
  Expansion            1.17000000000000E-5
  ThermalCond          5.40000000000000E+1
  SpecificHeat         4.65000000000000E+2
  InstantAlpha       FALSE
  Area                 5.68000000000000E-2
  MomentI11            1.80891733330000E-2
  MomentI22            6.25893333000000E-4
  MomentJ              1.25733330000000E-5
  ShearArea1           2.72325475390000E-2
  ShearArea2           2.75632291170000E-2
  SectionType        IBeam
    B1                 5.00000000000000E-1
    B2                 5.00000000000000E-1
    D                  1.40000000000000E+0
    T1                 3.00000000000000E-2
    T2                 3.00000000000000E-2
    T3                 2.00000000000000E-2
    CT               FALSE
  TimeDependentMod   Elastic
  UseMomCurv         FALSE
  NonLinType         Elasticplastic
  Hardening          Isotropic

BeamProp                 3     3407692   "Montante"
  MaterialName       "Structural Steelwork (AS 4100-1998) - Modified"
  Modulus              2.06000000000000E+5
  ShearMod             8.00000000000000E+4
  Poisson              3.00000000000000E-1
  UsePoisson         TRUE
  Density              9.00000000000000E+3
  Expansion            1.17000000000000E-5
  ThermalCond          5.40000000000000E+1
  SpecificHeat         4.65000000000000E+2
  InstantAlpha       FALSE
  Area                 3.19000000000000E-2
  MomentI11            8.49000000000000E-4
  MomentI22            1.95000000000000E-4
  MomentJ              1.41000000000000E-5
  ShearArea1           2.08262553580000E-2
  ShearArea2           7.51910694100000E-3
  SectionType        IBeam
    B1                 3.08000000000000E-1
    B2                 3.08000000000000E-1
    D                  3.95000000000000E-1
    T1                 4.00000000000000E-2
    T2                 4.00000000000000E-2
    T3                 2.10000000000000E-2
    CT               FALSE
  TimeDependentMod   Elastic
  UseMomCurv         FALSE
```

```
  NonLinType          Elasticplastic
  Hardening           Isotropic

BeamProp                  4     3407846   "Travi copertura"
  MaterialName        "Structural Steelwork (AS 4100-1998) - Modified"
  Modulus               2.06000000000000E+5
  ShearMod              8.00000000000000E+4
  Poisson               3.00000000000000E-1
  UsePoisson          TRUE
  Density               9.00000000000000E+3
  Expansion             1.17000000000000E-5
  ThermalCond           5.40000000000000E+1
  SpecificHeat          4.65000000000000E+2
  InstantAlpha        FALSE
  Area                  1.81000000000000E-2
  MomentI11             4.32000000000000E-4
  MomentI22             1.01000000000000E-4
  MomentJ               2.48000000000000E-6
  ShearArea1            1.13550427490000E-2
  ShearArea2            4.10301432500000E-3
  SectionType         IBeam
    B1                  3.00000000000000E-1
    B2                  3.00000000000000E-1
    D                   3.60000000000000E-1
    T1                  2.25000000000000E-2
    T2                  2.25000000000000E-2
    T3                  1.25000000000000E-2
    CT                FALSE
  TimeDependentMod    Elastic
  UseMomCurv          FALSE
  NonLinType          Elasticplastic
  Hardening           Isotropic

BeamProp                  5    16757299   "HBR-UPN300"
  MaterialName        "Structural Steelwork (AS 4100-1998) - Modified"
  Modulus               2.06000000000000E+5
  ShearMod              8.00000000000000E+4
  Poisson               3.00000000000000E-1
  UsePoisson          TRUE
  Density               9.00000000000000E+3
  Expansion             1.17000000000000E-5
  ThermalCond           5.40000000000000E+1
  SpecificHeat          4.65000000000000E+2
  InstantAlpha        FALSE
  Area                  5.88000000000000E-3
  MomentI11             8.03000000000000E-5
  MomentI22             4.95000000000000E-6
  MomentJ               3.40799000000000E-7
  ShearLength1         -5.41000000000000E-2
  ShearArea1            1.44163297500000E-3
  ShearArea2            2.66286057100000E-3
  SectionType         LipChannel
    B                   1.00000000000000E-1
    D                   3.00000000000000E-1
```

```
    T1                 1.60000000000000E-2
    T2                 1.00000000000000E-2
    CT               FALSE
  TimeDependentMod   Elastic
  UseMomCurv         FALSE
  NonLinType         Elasticplastic
  Hardening          Isotropic

TrussProp                9    16724812   "PBR"
  MaterialName       "Structural Steelwork (AS 4100-1998) - Modified"
  Modulus              2.06000000000000E+5
  ShearMod             8.00000000000000E+4
  Poisson              3.00000000000000E-1
  UsePoisson         TRUE
  Density              9.00000000000000E+3
  Expansion            1.17000000000000E-5
  ThermalCond          5.40000000000000E+1
  SpecificHeat         4.65000000000000E+2
  InstantAlpha       FALSE
  Area                 6.84000000000000E-4
  MomentJ              8.20800000000000E-9
  SectionType        Angle
    B                  6.00000000000000E-2
    D                  6.00000000000000E-2
    T1                 6.00000000000000E-3
    T2                 6.00000000000000E-3
    CT               FALSE
  IncludeTorsion     FALSE
  TimeDependentMod   Elastic
  NonLinType         Elasticplastic
  Hardening          Isotropic

BeamProp                10     8401919   "FITC-RIGID_baggioli"
  MaterialName       "Unknown Material - Modified"
  Modulus              3.00000000000000E+9
  Poisson              1.00000000000000E-1
  UsePoisson         TRUE
  Density              2.50000000000000E+3
  InstantAlpha       FALSE
  Area                 3.60000000000000E-1
  MomentI11            1.08000000000000E-2
  MomentI22            1.08000000000000E-2
  MomentJ              1.82304000000000E-2
  SectionType        SolidRect
    B                  6.00000000000000E-1
    D                  6.00000000000000E-1
    CT               FALSE
  TimeDependentMod   Elastic
  UseMomCurv         FALSE
  NonLinType         Elasticplastic
  Hardening          Isotropic

BeamProp                11    11730739   "FITC-RIGID_fondazione"
  MaterialName       "Unknown Material - Modified"
```

```
    Modulus              3.00000000000000E+9
    Poisson              1.00000000000000E-1
    UsePoisson         TRUE
    Density              2.50000000000000E+3
    InstantAlpha       FALSE
    Area                 2.83500000000000E+0
    MomentI11            1.04186250000000E+0
    MomentI22            4.30565625000000E-1
    MomentJ              1.06175725714300E+0
    SectionType        SolidRect
      B                  1.35000000000000E+0
      D                  2.10000000000000E+0
      CT               FALSE
    TimeDependentMod   Elastic
    UseMomCurv         FALSE
    NonLinType         Elasticplastic
    Hardening          Isotropic

  TrussProp               12     3394815   "truss fittizio"
    MaterialName       "Unknown Material - Modified"
    Modulus              2.00000000000000E+5
    UsePoisson         TRUE
    InstantAlpha       FALSE
    Area                 3.14159300000000E-6
    MomentJ              2.00000000000000E-12
    SectionType        SolidRound
      D                  2.00000000000000E-3
    IncludeTorsion     FALSE
    TimeDependentMod   Elastic
    NonLinType         Elasticplastic
    Hardening          Isotropic


/ ____________________________________________________________________________
/ PLATE PROPERTIES

  PatchPlateProp           1    16737843   "Plate Property 1"
    PatchTol             1.00000000000000E-4

  PatchPlateProp           2     3355647   "Load_Patch"
    PatchTol             1.00000000000000E-4


/ ____________________________________________________________________________
/ FREQUENCY-PERIOD TABLES

  PeriodTbl                1   "Spettro Ponte Gardena_ SLV"  None
     0.00000000000000E+0        1.00000000000000E-1
     1.87000000000000E-1        2.66000000000000E-1
     5.60000000000000E-1        2.66000000000000E-1
     6.23000000000000E-1        2.39000000000000E-1
     6.85000000000000E-1        2.17000000000000E-1
     7.47000000000000E-1        1.99000000000000E-1
     8.09000000000000E-1        1.84000000000000E-1
```

```
   8.71000000000000E-1        1.71000000000000E-1
   9.33000000000000E-1        1.59000000000000E-1
   9.96000000000000E-1        1.49000000000000E-1
   1.05800000000000E+0        1.41000000000000E-1
   1.12000000000000E+0        1.33000000000000E-1
   1.18200000000000E+0        1.26000000000000E-1
   1.24400000000000E+0        1.20000000000000E-1
   1.30600000000000E+0        1.14000000000000E-1
   1.36800000000000E+0        1.09000000000000E-1
   1.43100000000000E+0        1.04000000000000E-1
   1.49300000000000E+0        1.00000000000000E-1
   1.55500000000000E+0        9.60000000000000E-2
   1.61700000000000E+0        9.20000000000000E-2
   1.67900000000000E+0        8.90000000000000E-2
   1.74100000000000E+0        8.50000000000000E-2
   1.80400000000000E+0        8.30000000000000E-2
   1.86600000000000E+0        8.00000000000000E-2
   1.96700000000000E+0        7.20000000000000E-2
   2.06900000000000E+0        6.50000000000000E-2
   2.17100000000000E+0        5.90000000000000E-2
   2.27200000000000E+0        5.40000000000000E-2
   2.37400000000000E+0        4.90000000000000E-2
   2.47600000000000E+0        4.50000000000000E-2
   2.57700000000000E+0        4.20000000000000E-2
   2.67900000000000E+0        3.90000000000000E-2
   2.78000000000000E+0        3.60000000000000E-2
   2.88200000000000E+0        3.30000000000000E-2
   2.98400000000000E+0        3.10000000000000E-2
   3.08500000000000E+0        2.90000000000000E-2
   3.18700000000000E+0        2.70000000000000E-2
   3.28900000000000E+0        2.60000000000000E-2
   3.39000000000000E+0        2.40000000000000E-2
   3.49200000000000E+0        2.30000000000000E-2
   3.59300000000000E+0        2.10000000000000E-2
   3.69500000000000E+0        2.00000000000000E-2
   3.79700000000000E+0        1.90000000000000E-2
   3.89800000000000E+0        1.80000000000000E-2
   4.00000000000000E+0        1.70000000000000E-2

PeriodTbl                 2   "Spettro Ponte Gardena_SLC"  None
   0.00000000000000E+0        1.19000000000000E-1
   1.97000000000000E-1        3.30000000000000E-1
   5.91000000000000E-1        3.30000000000000E-1
   6.55000000000000E-1        2.98000000000000E-1
   7.18000000000000E-1        2.72000000000000E-1
   7.81000000000000E-1        2.50000000000000E-1
   8.44000000000000E-1        2.31000000000000E-1
   9.07000000000000E-1        2.15000000000000E-1
   9.71000000000000E-1        2.01000000000000E-1
   1.03400000000000E+0        1.89000000000000E-1
   1.09700000000000E+0        1.78000000000000E-1
   1.16000000000000E+0        1.68000000000000E-1
   1.22300000000000E+0        1.60000000000000E-1
   1.28700000000000E+0        1.52000000000000E-1
```

```
      1.35000000000000E+0        1.45000000000000E-1
      1.41300000000000E+0        1.38000000000000E-1
      1.47600000000000E+0        1.32000000000000E-1
      1.53900000000000E+0        1.27000000000000E-1
      1.60300000000000E+0        1.22000000000000E-1
      1.66600000000000E+0        1.17000000000000E-1
      1.72900000000000E+0        1.13000000000000E-1
      1.79200000000000E+0        1.09000000000000E-1
      1.85500000000000E+0        1.05000000000000E-1
      1.91900000000000E+0        1.02000000000000E-1
      2.01800000000000E+0        9.20000000000000E-2
      2.11700000000000E+0        8.40000000000000E-2
      2.21600000000000E+0        7.60000000000000E-2
      2.31500000000000E+0        7.00000000000000E-2
      2.41400000000000E+0        6.40000000000000E-2
      2.51300000000000E+0        5.90000000000000E-2
      2.61200000000000E+0        5.50000000000000E-2
      2.71200000000000E+0        5.10000000000000E-2
      2.81100000000000E+0        4.70000000000000E-2
      2.91000000000000E+0        4.40000000000000E-2
      3.00900000000000E+0        4.10000000000000E-2
      3.10800000000000E+0        3.90000000000000E-2
      3.20700000000000E+0        3.60000000000000E-2
      3.30600000000000E+0        3.40000000000000E-2
      3.40500000000000E+0        3.20000000000000E-2
      3.50400000000000E+0        3.10000000000000E-2
      3.60400000000000E+0        2.90000000000000E-2
      3.70300000000000E+0        2.70000000000000E-2
      3.80200000000000E+0        2.60000000000000E-2
      3.90100000000000E+0        2.50000000000000E-2
      4.00000000000000E+0        2.30000000000000E-2

/ ____________________________________________________________________
/ LINEAR STATIC SOLVER DATA

   LoadFreedomSetLSA        1   ON
      1       2       3       4       5       6       7       9
      8      10      11      12


/ ____________________________________________________________________
/ LINEAR BUCKLING SOLVER DATA

   BuckNumModes             4

   BuckShift              0.00000000000000E+0


/ ____________________________________________________________________
/ LOAD INFLUENCE SOLVER DATA

   LoadFreedomSetLIA        1   ON
      1
```

```
/ ____________________________________________________________________________
/ NON-LINEAR STATIC SOLVER DATA

   NonLinearIncrement       0   Yes  "SLU_000"
      LON1    1.35000000000000E+0
      LON2    1.35000000000000E+0
      LON3    1.50000000000000E+0
      FON1    0.00000000000000E+0

   NonLinearIncrement       0   Yes  "SLU_001"
      LON1    1.35000000000000E+0
      LON2    1.35000000000000E+0
      LON4    1.50000000000000E+0

   NonLinearIncrement       0   Yes  "SLU_01"
      LON1    1.35000000000000E+0
      LON2    1.35000000000000E+0
      LON3    1.50000000000000E+0
      LON5    1.50000000000000E+0

   NonLinearIncrement       0   Yes  "SLU_02"
      LON1    1.35000000000000E+0
      LON2    1.35000000000000E+0
      LON4    1.50000000000000E+0
      LON5    1.50000000000000E+0

   NonLinearIncrement       0   Yes  "SLU_03"
      LON1    1.35000000000000E+0
      LON2    1.35000000000000E+0
      LON3    1.50000000000000E+0
      LON6    1.50000000000000E+0

   NonLinearIncrement       0   Yes  "SLU_04"
      LON1    1.35000000000000E+0
      LON2    1.35000000000000E+0
      LON4    1.50000000000000E+0
      LON6    1.50000000000000E+0

   NonLinearIncrement       0   Yes  "SLU_05"
      LON1    1.35000000000000E+0
      LON2    1.35000000000000E+0
      LON3    1.50000000000000E+0
      LON7    1.50000000000000E+0

   NonLinearIncrement       0   Yes  "SLU_06"
      LON1    1.35000000000000E+0
      LON2    1.35000000000000E+0
      LON4    1.50000000000000E+0
      LON7    1.50000000000000E+0

   NonLinearIncrement       0   Yes  "SLU_07"
      LON1    1.35000000000000E+0
      LON2    1.35000000000000E+0
```

```
   LON3    1.50000000000000E+0
   LON9    1.50000000000000E+0

NonLinearIncrement       0   Yes  "SLU_08"
   LON1    1.35000000000000E+0
   LON2    1.35000000000000E+0
   LON4    1.50000000000000E+0
   LON9    1.50000000000000E+0

NonLinearIncrement       0   Yes  "SLU_09"
   LON1    1.35000000000000E+0
   LON2    1.35000000000000E+0
   LON3    1.50000000000000E+0
   LON8    1.45000000000000E+0

NonLinearIncrement       0   Yes  "SLU_10"
   LON1    1.35000000000000E+0
   LON2    1.35000000000000E+0
   LON4    1.50000000000000E+0
   LON8    1.45000000000000E+0

NonLinearIncrement       0   Yes  "SLU_11"
   LON1    1.35000000000000E+0
   LON2    1.35000000000000E+0
   LON3    1.50000000000000E+0
   LON10    1.45000000000000E+0

NonLinearIncrement       0   Yes  "SLU_12"
   LON1    1.35000000000000E+0
   LON2    1.35000000000000E+0
   LON4    1.50000000000000E+0
   LON10    1.45000000000000E+0

NonLinearIncrement       0   Yes  "SLU_13"
   LON1    1.35000000000000E+0
   LON2    1.35000000000000E+0
   LON3    1.50000000000000E+0
   LON11    1.50000000000000E+0

NonLinearIncrement       0   Yes  "SLU_14"
   LON1    1.35000000000000E+0
   LON2    1.35000000000000E+0
   LON4    1.50000000000000E+0
   LON11    1.50000000000000E+0

NonLinearIncrement       0   Yes  "SLU_15"
   LON1    1.35000000000000E+0
   LON2    1.35000000000000E+0
   LON3    1.50000000000000E+0
   LON12    1.50000000000000E+0

NonLinearIncrement       0   Yes  "SLU_16"
   LON1    1.35000000000000E+0
   LON2    1.35000000000000E+0
```

```
   LON4    1.50000000000000E+0
   LON12    1.50000000000000E+0

NonLinearIncrement       0   Yes  "SLU_17"
   LON1    1.35000000000000E+0
   LON2    1.35000000000000E+0
   LON3    1.50000000000000E+0
   LON5    1.50000000000000E+0
   LON7    9.00000000000000E-1

NonLinearIncrement       0   Yes  "SLU_18"
   LON1    1.35000000000000E+0
   LON2    1.35000000000000E+0
   LON4    1.50000000000000E+0
   LON5    1.50000000000000E+0
   LON7    9.00000000000000E-1

NonLinearIncrement       0   Yes  "SLU_19"
   LON1    1.35000000000000E+0
   LON2    1.35000000000000E+0
   LON3    1.50000000000000E+0
   LON5    1.50000000000000E+0
   LON9    9.00000000000000E-1

NonLinearIncrement       0   Yes  "SLU_20"
   LON1    1.35000000000000E+0
   LON2    1.35000000000000E+0
   LON4    1.50000000000000E+0
   LON5    1.50000000000000E+0
   LON9    9.00000000000000E-1

NonLinearIncrement       0   Yes  "SLU_21"
   LON1    1.35000000000000E+0
   LON2    1.35000000000000E+0
   LON3    1.50000000000000E+0
   LON5    1.50000000000000E+0
   LON11    9.00000000000000E-1

NonLinearIncrement       0   Yes  "SLU_22"
   LON1    1.35000000000000E+0
   LON2    1.35000000000000E+0
   LON4    1.50000000000000E+0
   LON5    1.50000000000000E+0
   LON11    9.00000000000000E-1

NonLinearIncrement       0   Yes  "SLU_23"
   LON1    1.35000000000000E+0
   LON2    1.35000000000000E+0
   LON3    1.50000000000000E+0
   LON5    1.50000000000000E+0
   LON12    9.00000000000000E-1

NonLinearIncrement       0   Yes  "SLU_24"
   LON1    1.35000000000000E+0
```

```
   LON2    1.35000000000000E+0
   LON4    1.50000000000000E+0
   LON5    1.50000000000000E+0
   LON12    9.00000000000000E-1

NonLinearIncrement       0   Yes  "SLU_25"
   LON1    1.35000000000000E+0
   LON2    1.35000000000000E+0
   LON3    1.50000000000000E+0
   LON5    1.50000000000000E+0
   LON7    9.00000000000000E-1
   LON11    9.00000000000000E-1

NonLinearIncrement       0   Yes  "SLU_26"
   LON1    1.35000000000000E+0
   LON2    1.35000000000000E+0
   LON4    1.50000000000000E+0
   LON5    1.50000000000000E+0
   LON7    9.00000000000000E-1
   LON11    9.00000000000000E-1

NonLinearIncrement       0   Yes  "SLU_27"
   LON1    1.35000000000000E+0
   LON2    1.35000000000000E+0
   LON3    1.50000000000000E+0
   LON5    1.50000000000000E+0
   LON9    9.00000000000000E-1
   LON12    9.00000000000000E-1

NonLinearIncrement       0   Yes  "SLU_28"
   LON1    1.35000000000000E+0
   LON2    1.35000000000000E+0
   LON4    1.50000000000000E+0
   LON5    1.50000000000000E+0
   LON9    9.00000000000000E-1
   LON12    9.00000000000000E-1

NonLinearIncrement       0   Yes  "SLU_29"
   LON1    1.35000000000000E+0
   LON2    1.35000000000000E+0
   LON3    1.50000000000000E+0
   LON6    1.50000000000000E+0
   LON7    9.00000000000000E-1

NonLinearIncrement       0   Yes  "SLU_30"
   LON1    1.35000000000000E+0
   LON2    1.35000000000000E+0
   LON4    1.50000000000000E+0
   LON6    1.50000000000000E+0
   LON7    9.00000000000000E-1

NonLinearIncrement       0   Yes  "SLU_31"
   LON1    1.35000000000000E+0
   LON2    1.35000000000000E+0
```

```
   LON3    1.50000000000000E+0
   LON6    1.50000000000000E+0
   LON9    9.00000000000000E-1

NonLinearIncrement       0   Yes  "SLU_32"
   LON1    1.35000000000000E+0
   LON2    1.35000000000000E+0
   LON4    1.50000000000000E+0
   LON6    1.50000000000000E+0
   LON9    9.00000000000000E-1

NonLinearIncrement       0   Yes  "SLU_33"
   LON1    1.35000000000000E+0
   LON2    1.35000000000000E+0
   LON3    1.50000000000000E+0
   LON6    1.50000000000000E+0
   LON8    1.16000000000000E+0

NonLinearIncrement       0   Yes  "SLU_34"
   LON1    1.35000000000000E+0
   LON2    1.35000000000000E+0
   LON4    1.50000000000000E+0
   LON6    1.50000000000000E+0
   LON8    1.16000000000000E+0

NonLinearIncrement       0   Yes  "SLU_35"
   LON1    1.35000000000000E+0
   LON2    1.35000000000000E+0
   LON3    1.50000000000000E+0
   LON6    1.50000000000000E+0
   LON10    1.16000000000000E+0

NonLinearIncrement       0   Yes  "SLU_36"
   LON1    1.35000000000000E+0
   LON2    1.35000000000000E+0
   LON4    1.50000000000000E+0
   LON6    1.50000000000000E+0
   LON10    1.16000000000000E+0

NonLinearIncrement       0   Yes  "SLU_37"
   LON1    1.35000000000000E+0
   LON2    1.35000000000000E+0
   LON3    1.50000000000000E+0
   LON6    1.50000000000000E+0
   LON11    9.00000000000000E-1

NonLinearIncrement       0   Yes  "SLU_38"
   LON1    1.35000000000000E+0
   LON2    1.35000000000000E+0
   LON4    1.50000000000000E+0
   LON6    1.50000000000000E+0
   LON11    9.00000000000000E-1

NonLinearIncrement       0   Yes  "SLU_39"
```

```
   LON1    1.35000000000000E+0
   LON2    1.35000000000000E+0
   LON3    1.50000000000000E+0
   LON6    1.50000000000000E+0
   LON12    9.00000000000000E-1

NonLinearIncrement       0   Yes  "SLU_40"
   LON1    1.35000000000000E+0
   LON2    1.35000000000000E+0
   LON4    1.50000000000000E+0
   LON6    1.50000000000000E+0
   LON12    9.00000000000000E-1

NonLinearIncrement       0   Yes  "SLU_41"
   LON1    1.35000000000000E+0
   LON2    1.35000000000000E+0
   LON3    1.50000000000000E+0
   LON6    1.50000000000000E+0
   LON7    9.00000000000000E-1
   LON8    1.16000000000000E+0

NonLinearIncrement       0   Yes  "SLU_42"
   LON1    1.35000000000000E+0
   LON2    1.35000000000000E+0
   LON4    1.50000000000000E+0
   LON6    1.50000000000000E+0
   LON7    9.00000000000000E-1
   LON8    1.16000000000000E+0

NonLinearIncrement       0   Yes  "SLU_43"
   LON1    1.35000000000000E+0
   LON2    1.35000000000000E+0
   LON3    1.50000000000000E+0
   LON6    1.50000000000000E+0
   LON9    9.00000000000000E-1
   LON10    1.16000000000000E+0

NonLinearIncrement       0   Yes  "SLU_44"
   LON1    1.35000000000000E+0
   LON2    1.35000000000000E+0
   LON4    1.50000000000000E+0
   LON6    1.50000000000000E+0
   LON9    9.00000000000000E-1
   LON10    1.16000000000000E+0

NonLinearIncrement       0   Yes  "SLU_45"
   LON1    1.35000000000000E+0
   LON2    1.35000000000000E+0
   LON3    1.50000000000000E+0
   LON6    1.50000000000000E+0
   LON7    9.00000000000000E-1
   LON11    9.00000000000000E-1

NonLinearIncrement       0   Yes  "SLU_46"
```

```
   LON1    1.35000000000000E+0
   LON2    1.35000000000000E+0
   LON4    1.50000000000000E+0
   LON6    1.50000000000000E+0
   LON7    9.00000000000000E-1
   LON11    9.00000000000000E-1

NonLinearIncrement       0   Yes  "SLU_47"
   LON1    1.35000000000000E+0
   LON2    1.35000000000000E+0
   LON3    1.50000000000000E+0
   LON6    1.50000000000000E+0
   LON9    9.00000000000000E-1
   LON12    9.00000000000000E-1

NonLinearIncrement       0   Yes  "SLU_48"
   LON1    1.35000000000000E+0
   LON2    1.35000000000000E+0
   LON4    1.50000000000000E+0
   LON6    1.50000000000000E+0
   LON9    9.00000000000000E-1
   LON12    9.00000000000000E-1

NonLinearIncrement       0   Yes  "SLU_49"
   LON1    1.35000000000000E+0
   LON2    1.35000000000000E+0
   LON3    1.50000000000000E+0
   LON6    1.50000000000000E+0
   LON8    1.16000000000000E+0
   LON11    9.00000000000000E-1

NonLinearIncrement       0   Yes  "SLU_50"
   LON1    1.35000000000000E+0
   LON2    1.35000000000000E+0
   LON4    1.50000000000000E+0
   LON6    1.50000000000000E+0
   LON8    1.16000000000000E+0
   LON11    9.00000000000000E-1

NonLinearIncrement       0   Yes  "SLU_51"
   LON1    1.35000000000000E+0
   LON2    1.35000000000000E+0
   LON3    1.50000000000000E+0
   LON6    1.50000000000000E+0
   LON10    1.16000000000000E+0
   LON12    9.00000000000000E-1

NonLinearIncrement       0   Yes  "SLU_52"
   LON1    1.35000000000000E+0
   LON2    1.35000000000000E+0
   LON4    1.50000000000000E+0
   LON6    1.50000000000000E+0
   LON10    1.16000000000000E+0
   LON12    9.00000000000000E-1
```

```
NonLinearIncrement       0   Yes  "SLU_53"
   LON1    1.35000000000000E+0
   LON2    1.35000000000000E+0
   LON3    1.50000000000000E+0
   LON6    1.50000000000000E+0
   LON7    9.00000000000000E-1
   LON8    1.16000000000000E+0
   LON11    9.00000000000000E-1

NonLinearIncrement       0   Yes  "SLU_54"
   LON1    1.35000000000000E+0
   LON2    1.35000000000000E+0
   LON4    1.50000000000000E+0
   LON6    1.50000000000000E+0
   LON7    9.00000000000000E-1
   LON8    1.16000000000000E+0
   LON11    9.00000000000000E-1

NonLinearIncrement       0   Yes  "SLU_55"
   LON1    1.35000000000000E+0
   LON2    1.35000000000000E+0
   LON3    1.50000000000000E+0
   LON6    1.50000000000000E+0
   LON9    9.00000000000000E-1
   LON10    1.16000000000000E+0
   LON12    9.00000000000000E-1

NonLinearIncrement       0   Yes  "SLU_56"
   LON1    1.35000000000000E+0
   LON2    1.35000000000000E+0
   LON4    1.50000000000000E+0
   LON6    1.50000000000000E+0
   LON9    9.00000000000000E-1
   LON10    1.16000000000000E+0
   LON12    9.00000000000000E-1

NonLinearIncrement       0   Yes  "SLU_57"
   LON1    1.35000000000000E+0
   LON2    1.35000000000000E+0
   LON3    1.50000000000000E+0
   LON6    1.05000000000000E+0
   LON7    1.50000000000000E+0

NonLinearIncrement       0   Yes  "SLU_58"
   LON1    1.35000000000000E+0
   LON2    1.35000000000000E+0
   LON4    1.50000000000000E+0
   LON6    1.05000000000000E+0
   LON7    1.50000000000000E+0

NonLinearIncrement       0   Yes  "SLU_59"
   LON1    1.35000000000000E+0
   LON2    1.35000000000000E+0
```

```
   LON3    1.50000000000000E+0
   LON6    1.05000000000000E+0
   LON9    1.50000000000000E+0

NonLinearIncrement       0   Yes  "SLU_60"
   LON1    1.35000000000000E+0
   LON2    1.35000000000000E+0
   LON4    1.50000000000000E+0
   LON6    1.05000000000000E+0
   LON9    1.50000000000000E+0

NonLinearIncrement       0   Yes  "SLU_61"
   LON1    1.35000000000000E+0
   LON2    1.35000000000000E+0
   LON3    1.50000000000000E+0
   LON7    1.50000000000000E+0
   LON8    1.16000000000000E+0

NonLinearIncrement       0   Yes  "SLU_62"
   LON1    1.35000000000000E+0
   LON2    1.35000000000000E+0
   LON4    1.50000000000000E+0
   LON7    1.50000000000000E+0
   LON8    1.16000000000000E+0

NonLinearIncrement       0   Yes  "SLU_63"
   LON1    1.35000000000000E+0
   LON2    1.35000000000000E+0
   LON3    1.50000000000000E+0
   LON9    1.50000000000000E+0
   LON8    1.16000000000000E+0

NonLinearIncrement       0   Yes  "SLU_64"
   LON1    1.35000000000000E+0
   LON2    1.35000000000000E+0
   LON4    1.50000000000000E+0
   LON9    1.50000000000000E+0
   LON8    1.16000000000000E+0

NonLinearIncrement       0   Yes  "SLU_65"
   LON1    1.35000000000000E+0
   LON2    1.35000000000000E+0
   LON3    1.50000000000000E+0
   LON7    1.50000000000000E+0
   LON10    1.16000000000000E+0

NonLinearIncrement       0   Yes  "SLU_66"
   LON1    1.35000000000000E+0
   LON2    1.35000000000000E+0
   LON4    1.50000000000000E+0
   LON7    1.50000000000000E+0
   LON10    1.16000000000000E+0

NonLinearIncrement       0   Yes  "SLU_67"
```

```
   LON1    1.35000000000000E+0
   LON2    1.35000000000000E+0
   LON3    1.50000000000000E+0
   LON9    1.50000000000000E+0
   LON10    1.16000000000000E+0

NonLinearIncrement       0   Yes  "SLU_68"
   LON1    1.35000000000000E+0
   LON2    1.35000000000000E+0
   LON4    1.50000000000000E+0
   LON9    1.50000000000000E+0
   LON10    1.16000000000000E+0

NonLinearIncrement       0   Yes  "SLU_69"
   LON1    1.35000000000000E+0
   LON2    1.35000000000000E+0
   LON3    1.50000000000000E+0
   LON7    1.50000000000000E+0
   LON11    9.00000000000000E-1

NonLinearIncrement       0   Yes  "SLU_70"
   LON1    1.35000000000000E+0
   LON2    1.35000000000000E+0
   LON4    1.50000000000000E+0
   LON7    1.50000000000000E+0
   LON11    9.00000000000000E-1

NonLinearIncrement       0   Yes  "SLU_71"
   LON1    1.35000000000000E+0
   LON2    1.35000000000000E+0
   LON3    1.50000000000000E+0
   LON9    1.50000000000000E+0
   LON11    9.00000000000000E-1

NonLinearIncrement       0   Yes  "SLU_72"
   LON1    1.35000000000000E+0
   LON2    1.35000000000000E+0
   LON4    1.50000000000000E+0
   LON9    1.50000000000000E+0
   LON11    9.00000000000000E-1

NonLinearIncrement       0   Yes  "SLU_73"
   LON1    1.35000000000000E+0
   LON2    1.35000000000000E+0
   LON3    1.50000000000000E+0
   LON7    1.50000000000000E+0
   LON12    9.00000000000000E-1

NonLinearIncrement       0   Yes  "SLU_74"
   LON1    1.35000000000000E+0
   LON2    1.35000000000000E+0
   LON4    1.50000000000000E+0
   LON7    1.50000000000000E+0
   LON12    9.00000000000000E-1
```

```
NonLinearIncrement       0   Yes  "SLU_75"
   LON1    1.35000000000000E+0
   LON2    1.35000000000000E+0
   LON3    1.50000000000000E+0
   LON9    1.50000000000000E+0
   LON12    9.00000000000000E-1

NonLinearIncrement       0   Yes  "SLU_76"
   LON1    1.35000000000000E+0
   LON2    1.35000000000000E+0
   LON4    1.50000000000000E+0
   LON9    1.50000000000000E+0
   LON12    9.00000000000000E-1

NonLinearIncrement       0   Yes  "SLU_77"
   LON1    1.35000000000000E+0
   LON2    1.35000000000000E+0
   LON3    1.50000000000000E+0
   LON6    1.05000000000000E+0
   LON7    1.50000000000000E+0
   LON8    1.16000000000000E+0

NonLinearIncrement       0   Yes  "SLU_78"
   LON1    1.35000000000000E+0
   LON2    1.35000000000000E+0
   LON4    1.50000000000000E+0
   LON6    1.05000000000000E+0
   LON7    1.50000000000000E+0
   LON8    1.16000000000000E+0

NonLinearIncrement       0   Yes  "SLU_79"
   LON1    1.35000000000000E+0
   LON2    1.35000000000000E+0
   LON3    1.50000000000000E+0
   LON6    1.05000000000000E+0
   LON9    1.50000000000000E+0
   LON8    1.16000000000000E+0

NonLinearIncrement       0   Yes  "SLU_80"
   LON1    1.35000000000000E+0
   LON2    1.35000000000000E+0
   LON4    1.50000000000000E+0
   LON6    1.05000000000000E+0
   LON9    1.50000000000000E+0
   LON8    1.16000000000000E+0

NonLinearIncrement       0   Yes  "SLU_81"
   LON1    1.35000000000000E+0
   LON2    1.35000000000000E+0
   LON3    1.50000000000000E+0
   LON6    1.05000000000000E+0
   LON7    1.50000000000000E+0
   LON10    1.16000000000000E+0
```

```
NonLinearIncrement       0   Yes  "SLU_82"
   LON1    1.35000000000000E+0
   LON2    1.35000000000000E+0
   LON4    1.50000000000000E+0
   LON6    1.05000000000000E+0
   LON7    1.50000000000000E+0
   LON10    1.16000000000000E+0

NonLinearIncrement       0   Yes  "SLU_83"
   LON1    1.35000000000000E+0
   LON2    1.35000000000000E+0
   LON3    1.50000000000000E+0
   LON6    1.05000000000000E+0
   LON9    1.50000000000000E+0
   LON10    1.16000000000000E+0

NonLinearIncrement       0   Yes  "SLU_84"
   LON1    1.35000000000000E+0
   LON2    1.35000000000000E+0
   LON4    1.50000000000000E+0
   LON6    1.05000000000000E+0
   LON9    1.50000000000000E+0
   LON10    1.16000000000000E+0

NonLinearIncrement       0   Yes  "SLU_85"
   LON1    1.35000000000000E+0
   LON2    1.35000000000000E+0
   LON3    1.50000000000000E+0
   LON6    1.05000000000000E+0
   LON7    1.50000000000000E+0
   LON11    9.00000000000000E-1

NonLinearIncrement       0   Yes  "SLU_86"
   LON1    1.35000000000000E+0
   LON2    1.35000000000000E+0
   LON4    1.50000000000000E+0
   LON6    1.05000000000000E+0
   LON7    1.50000000000000E+0
   LON11    9.00000000000000E-1

NonLinearIncrement       0   Yes  "SLU_87"
   LON1    1.35000000000000E+0
   LON2    1.35000000000000E+0
   LON3    1.50000000000000E+0
   LON6    1.05000000000000E+0
   LON9    1.50000000000000E+0
   LON11    9.00000000000000E-1

NonLinearIncrement       0   Yes  "SLU_88"
   LON1    1.35000000000000E+0
   LON2    1.35000000000000E+0
   LON4    1.50000000000000E+0
   LON6    1.05000000000000E+0
```

```
   LON9    1.50000000000000E+0
   LON11    9.00000000000000E-1

NonLinearIncrement       0   Yes  "SLU_89"
   LON1    1.35000000000000E+0
   LON2    1.35000000000000E+0
   LON3    1.50000000000000E+0
   LON6    1.05000000000000E+0
   LON7    1.50000000000000E+0
   LON12    9.00000000000000E-1

NonLinearIncrement       0   Yes  "SLU_90"
   LON1    1.35000000000000E+0
   LON2    1.35000000000000E+0
   LON4    1.50000000000000E+0
   LON6    1.05000000000000E+0
   LON7    1.50000000000000E+0
   LON12    9.00000000000000E-1

NonLinearIncrement       0   Yes  "SLU_91"
   LON1    1.35000000000000E+0
   LON2    1.35000000000000E+0
   LON3    1.50000000000000E+0
   LON6    1.05000000000000E+0
   LON9    1.50000000000000E+0
   LON12    9.00000000000000E-1

NonLinearIncrement       0   Yes  "SLU_92"
   LON1    1.35000000000000E+0
   LON2    1.35000000000000E+0
   LON4    1.50000000000000E+0
   LON6    1.05000000000000E+0
   LON9    1.50000000000000E+0
   LON12    9.00000000000000E-1

NonLinearIncrement       0   Yes  "SLU_93"
   LON1    1.35000000000000E+0
   LON2    1.35000000000000E+0
   LON3    1.50000000000000E+0
   LON7    1.50000000000000E+0
   LON8    1.16000000000000E+0
   LON11    9.00000000000000E-1

NonLinearIncrement       0   Yes  "SLU_94"
   LON1    1.35000000000000E+0
   LON2    1.35000000000000E+0
   LON4    1.50000000000000E+0
   LON7    1.50000000000000E+0
   LON8    1.16000000000000E+0
   LON11    9.00000000000000E-1

NonLinearIncrement       0   Yes  "SLU_95"
   LON1    1.35000000000000E+0
   LON2    1.35000000000000E+0
```

```
   LON3    1.50000000000000E+0
   LON9    1.50000000000000E+0
   LON8    1.16000000000000E+0
   LON11    9.00000000000000E-1

NonLinearIncrement       0   Yes  "SLU_96"
   LON1    1.35000000000000E+0
   LON2    1.35000000000000E+0
   LON4    1.50000000000000E+0
   LON9    1.50000000000000E+0
   LON8    1.16000000000000E+0
   LON11    9.00000000000000E-1

NonLinearIncrement       0   Yes  "SLU_97"
   LON1    1.35000000000000E+0
   LON2    1.35000000000000E+0
   LON3    1.50000000000000E+0
   LON7    1.50000000000000E+0
   LON8    1.16000000000000E+0
   LON12    9.00000000000000E-1

NonLinearIncrement       0   Yes  "SLU_98"
   LON1    1.35000000000000E+0
   LON2    1.35000000000000E+0
   LON4    1.50000000000000E+0
   LON7    1.50000000000000E+0
   LON8    1.16000000000000E+0
   LON12    9.00000000000000E-1

NonLinearIncrement       0   Yes  "SLU_99"
   LON1    1.35000000000000E+0
   LON2    1.35000000000000E+0
   LON3    1.50000000000000E+0
   LON9    1.50000000000000E+0
   LON8    1.16000000000000E+0
   LON12    9.00000000000000E-1

NonLinearIncrement       0   Yes  "SLU_100"
   LON1    1.35000000000000E+0
   LON2    1.35000000000000E+0
   LON4    1.50000000000000E+0
   LON9    1.50000000000000E+0
   LON8    1.16000000000000E+0
   LON12    9.00000000000000E-1

NonLinearIncrement       0   Yes  "SLU_101"
   LON1    1.35000000000000E+0
   LON2    1.35000000000000E+0
   LON3    1.50000000000000E+0
   LON7    1.50000000000000E+0
   LON10    1.16000000000000E+0
   LON11    9.00000000000000E-1

NonLinearIncrement       0   Yes  "SLU_102"
```

```
   LON1    1.35000000000000E+0
   LON2    1.35000000000000E+0
   LON4    1.50000000000000E+0
   LON7    1.50000000000000E+0
   LON10    1.16000000000000E+0
   LON11    9.00000000000000E-1

NonLinearIncrement       0   Yes  "SLU_103"
   LON1    1.35000000000000E+0
   LON2    1.35000000000000E+0
   LON3    1.50000000000000E+0
   LON9    1.50000000000000E+0
   LON10    1.16000000000000E+0
   LON11    9.00000000000000E-1

NonLinearIncrement       0   Yes  "SLU_104"
   LON1    1.35000000000000E+0
   LON2    1.35000000000000E+0
   LON4    1.50000000000000E+0
   LON9    1.50000000000000E+0
   LON10    1.16000000000000E+0
   LON11    9.00000000000000E-1

NonLinearIncrement       0   Yes  "SLU_105"
   LON1    1.35000000000000E+0
   LON2    1.35000000000000E+0
   LON3    1.50000000000000E+0
   LON7    1.50000000000000E+0
   LON10    1.16000000000000E+0
   LON12    9.00000000000000E-1

NonLinearIncrement       0   Yes  "SLU_106"
   LON1    1.35000000000000E+0
   LON2    1.35000000000000E+0
   LON4    1.50000000000000E+0
   LON7    1.50000000000000E+0
   LON10    1.16000000000000E+0
   LON12    9.00000000000000E-1

NonLinearIncrement       0   Yes  "SLU_107"
   LON1    1.35000000000000E+0
   LON2    1.35000000000000E+0
   LON3    1.50000000000000E+0
   LON9    1.50000000000000E+0
   LON10    1.16000000000000E+0
   LON12    9.00000000000000E-1

NonLinearIncrement       0   Yes  "SLU_108"
   LON1    1.35000000000000E+0
   LON2    1.35000000000000E+0
   LON4    1.50000000000000E+0
   LON9    1.50000000000000E+0
   LON10    1.16000000000000E+0
   LON12    9.00000000000000E-1
```

```
NonLinearIncrement       0   Yes  "SLU_109"
   LON1    1.35000000000000E+0
   LON2    1.35000000000000E+0
   LON3    1.50000000000000E+0
   LON6    1.05000000000000E+0
   LON7    1.50000000000000E+0
   LON8    1.16000000000000E+0
   LON11    9.00000000000000E-1

NonLinearIncrement       0   Yes  "SLU_110"
   LON1    1.35000000000000E+0
   LON2    1.35000000000000E+0
   LON4    1.50000000000000E+0
   LON6    1.05000000000000E+0
   LON7    1.50000000000000E+0
   LON8    1.16000000000000E+0
   LON11    9.00000000000000E-1

NonLinearIncrement       0   Yes  "SLU_111"
   LON1    1.35000000000000E+0
   LON2    1.35000000000000E+0
   LON3    1.50000000000000E+0
   LON6    1.05000000000000E+0
   LON9    1.50000000000000E+0
   LON8    1.16000000000000E+0
   LON11    9.00000000000000E-1

NonLinearIncrement       0   Yes  "SLU_112"
   LON1    1.35000000000000E+0
   LON2    1.35000000000000E+0
   LON4    1.50000000000000E+0
   LON6    1.05000000000000E+0
   LON9    1.50000000000000E+0
   LON8    1.16000000000000E+0
   LON11    9.00000000000000E-1

NonLinearIncrement       0   Yes  "SLU_113"
   LON1    1.35000000000000E+0
   LON2    1.35000000000000E+0
   LON3    1.50000000000000E+0
   LON6    1.05000000000000E+0
   LON7    1.50000000000000E+0
   LON8    1.16000000000000E+0
   LON12    9.00000000000000E-1

NonLinearIncrement       0   Yes  "SLU_114"
   LON1    1.35000000000000E+0
   LON2    1.35000000000000E+0
   LON4    1.50000000000000E+0
   LON6    1.05000000000000E+0
   LON7    1.50000000000000E+0
   LON8    1.16000000000000E+0
   LON12    9.00000000000000E-1
```

```
NonLinearIncrement       0   Yes  "SLU_115"
   LON1    1.35000000000000E+0
   LON2    1.35000000000000E+0
   LON3    1.50000000000000E+0
   LON6    1.05000000000000E+0
   LON9    1.50000000000000E+0
   LON8    1.16000000000000E+0
   LON12    9.00000000000000E-1

NonLinearIncrement       0   Yes  "SLU_116"
   LON1    1.35000000000000E+0
   LON2    1.35000000000000E+0
   LON4    1.50000000000000E+0
   LON6    1.05000000000000E+0
   LON9    1.50000000000000E+0
   LON8    1.16000000000000E+0
   LON12    9.00000000000000E-1

NonLinearIncrement       0   Yes  "SLU_117"
   LON1    1.35000000000000E+0
   LON2    1.35000000000000E+0
   LON3    1.50000000000000E+0
   LON6    1.05000000000000E+0
   LON7    1.50000000000000E+0
   LON10    1.16000000000000E+0
   LON11    9.00000000000000E-1

NonLinearIncrement       0   Yes  "SLU_118"
   LON1    1.35000000000000E+0
   LON2    1.35000000000000E+0
   LON4    1.50000000000000E+0
   LON6    1.05000000000000E+0
   LON7    1.50000000000000E+0
   LON10    1.16000000000000E+0
   LON11    9.00000000000000E-1

NonLinearIncrement       0   Yes  "SLU_119"
   LON1    1.35000000000000E+0
   LON2    1.35000000000000E+0
   LON3    1.50000000000000E+0
   LON6    1.05000000000000E+0
   LON9    1.50000000000000E+0
   LON10    1.16000000000000E+0
   LON11    9.00000000000000E-1

NonLinearIncrement       0   Yes  "SLU_120"
   LON1    1.35000000000000E+0
   LON2    1.35000000000000E+0
   LON4    1.50000000000000E+0
   LON6    1.05000000000000E+0
   LON9    1.50000000000000E+0
   LON10    1.16000000000000E+0
   LON11    9.00000000000000E-1
```

```
NonLinearIncrement       0   Yes  "SLU_121"
   LON1    1.35000000000000E+0
   LON2    1.35000000000000E+0
   LON3    1.50000000000000E+0
   LON6    1.05000000000000E+0
   LON7    1.50000000000000E+0
   LON10    1.16000000000000E+0
   LON12    9.00000000000000E-1

NonLinearIncrement       0   Yes  "SLU_122"
   LON1    1.35000000000000E+0
   LON2    1.35000000000000E+0
   LON4    1.50000000000000E+0
   LON6    1.05000000000000E+0
   LON7    1.50000000000000E+0
   LON10    1.16000000000000E+0
   LON12    9.00000000000000E-1

NonLinearIncrement       0   Yes  "SLU_123"
   LON1    1.35000000000000E+0
   LON2    1.35000000000000E+0
   LON3    1.50000000000000E+0
   LON6    1.05000000000000E+0
   LON9    1.50000000000000E+0
   LON10    1.16000000000000E+0
   LON12    9.00000000000000E-1

NonLinearIncrement       0   Yes  "SLU_124"
   LON1    1.35000000000000E+0
   LON2    1.35000000000000E+0
   LON4    1.50000000000000E+0
   LON6    1.05000000000000E+0
   LON9    1.50000000000000E+0
   LON10    1.16000000000000E+0
   LON12    9.00000000000000E-1

NonLinearIncrement       0   Yes  "SLU_125"
   LON1    1.35000000000000E+0
   LON2    1.35000000000000E+0
   LON3    1.50000000000000E+0
   LON6    1.05000000000000E+0
   LON8    1.45000000000000E+0

NonLinearIncrement       0   Yes  "SLU_126"
   LON1    1.35000000000000E+0
   LON2    1.35000000000000E+0
   LON4    1.50000000000000E+0
   LON6    1.05000000000000E+0
   LON8    1.45000000000000E+0

NonLinearIncrement       0   Yes  "SLU_127"
   LON1    1.35000000000000E+0
   LON2    1.35000000000000E+0
```

```
   LON3    1.50000000000000E+0
   LON6    1.05000000000000E+0
   LON10    1.45000000000000E+0

NonLinearIncrement       0   Yes  "SLU_128"
   LON1    1.35000000000000E+0
   LON2    1.35000000000000E+0
   LON4    1.50000000000000E+0
   LON6    1.05000000000000E+0
   LON10    1.45000000000000E+0

NonLinearIncrement       0   Yes  "SLU_129"
   LON1    1.35000000000000E+0
   LON2    1.35000000000000E+0
   LON3    1.50000000000000E+0
   LON7    9.00000000000000E-1
   LON8    1.45000000000000E+0

NonLinearIncrement       0   Yes  "SLU_130"
   LON1    1.35000000000000E+0
   LON2    1.35000000000000E+0
   LON4    1.50000000000000E+0
   LON7    9.00000000000000E-1
   LON8    1.45000000000000E+0

NonLinearIncrement       0   Yes  "SLU_131"
   LON1    1.35000000000000E+0
   LON2    1.35000000000000E+0
   LON3    1.50000000000000E+0
   LON9    9.00000000000000E-1
   LON8    1.45000000000000E+0

NonLinearIncrement       0   Yes  "SLU_132"
   LON1    1.35000000000000E+0
   LON2    1.35000000000000E+0
   LON4    1.50000000000000E+0
   LON9    9.00000000000000E-1
   LON8    1.45000000000000E+0

NonLinearIncrement       0   Yes  "SLU_133"
   LON1    1.35000000000000E+0
   LON2    1.35000000000000E+0
   LON3    1.50000000000000E+0
   LON7    9.00000000000000E-1
   LON10    1.45000000000000E+0

NonLinearIncrement       0   Yes  "SLU_134"
   LON1    1.35000000000000E+0
   LON2    1.35000000000000E+0
   LON4    1.50000000000000E+0
   LON7    9.00000000000000E-1
   LON10    1.45000000000000E+0

NonLinearIncrement       0   Yes  "SLU_135"
```

```
   LON1    1.35000000000000E+0
   LON2    1.35000000000000E+0
   LON3    1.50000000000000E+0
   LON9    9.00000000000000E-1
   LON10    1.45000000000000E+0

NonLinearIncrement       0   Yes  "SLU_136"
   LON1    1.35000000000000E+0
   LON2    1.35000000000000E+0
   LON4    1.50000000000000E+0
   LON9    9.00000000000000E-1
   LON10    1.45000000000000E+0

NonLinearIncrement       0   Yes  "SLU_137"
   LON1    1.35000000000000E+0
   LON2    1.35000000000000E+0
   LON3    1.50000000000000E+0
   LON8    1.45000000000000E+0
   LON11    9.00000000000000E-1

NonLinearIncrement       0   Yes  "SLU_138"
   LON1    1.35000000000000E+0
   LON2    1.35000000000000E+0
   LON4    1.50000000000000E+0
   LON8    1.45000000000000E+0
   LON11    9.00000000000000E-1

NonLinearIncrement       0   Yes  "SLU_139"
   LON1    1.35000000000000E+0
   LON2    1.35000000000000E+0
   LON3    1.50000000000000E+0
   LON8    1.45000000000000E+0
   LON11    9.00000000000000E-1

NonLinearIncrement       0   Yes  "SLU_140"
   LON1    1.35000000000000E+0
   LON2    1.35000000000000E+0
   LON4    1.50000000000000E+0
   LON8    1.45000000000000E+0
   LON11    9.00000000000000E-1

NonLinearIncrement       0   Yes  "SLU_141"
   LON1    1.35000000000000E+0
   LON2    1.35000000000000E+0
   LON3    1.50000000000000E+0
   LON10    1.45000000000000E+0
   LON12    9.00000000000000E-1

NonLinearIncrement       0   Yes  "SLU_142"
   LON1    1.35000000000000E+0
   LON2    1.35000000000000E+0
   LON4    1.50000000000000E+0
   LON10    1.45000000000000E+0
   LON12    9.00000000000000E-1
```

```
NonLinearIncrement       0   Yes  "SLU_143"
   LON1    1.35000000000000E+0
   LON2    1.35000000000000E+0
   LON3    1.50000000000000E+0
   LON10    1.45000000000000E+0
   LON12    9.00000000000000E-1

NonLinearIncrement       0   Yes  "SLU_144"
   LON1    1.35000000000000E+0
   LON2    1.35000000000000E+0
   LON4    1.50000000000000E+0
   LON10    1.45000000000000E+0
   LON12    9.00000000000000E-1

NonLinearIncrement       0   Yes  "SLU_145"
   LON1    1.35000000000000E+0
   LON2    1.35000000000000E+0
   LON3    1.50000000000000E+0
   LON6    1.05000000000000E+0
   LON7    9.00000000000000E-1
   LON8    1.45000000000000E+0

NonLinearIncrement       0   Yes  "SLU_146"
   LON1    1.35000000000000E+0
   LON2    1.35000000000000E+0
   LON4    1.50000000000000E+0
   LON6    1.05000000000000E+0
   LON7    9.00000000000000E-1
   LON8    1.45000000000000E+0

NonLinearIncrement       0   Yes  "SLU_147"
   LON1    1.35000000000000E+0
   LON2    1.35000000000000E+0
   LON3    1.50000000000000E+0
   LON6    1.05000000000000E+0
   LON9    9.00000000000000E-1
   LON8    1.45000000000000E+0

NonLinearIncrement       0   Yes  "SLU_148"
   LON1    1.35000000000000E+0
   LON2    1.35000000000000E+0
   LON4    1.50000000000000E+0
   LON6    1.05000000000000E+0
   LON9    9.00000000000000E-1
   LON8    1.45000000000000E+0

NonLinearIncrement       0   Yes  "SLU_149"
   LON1    1.35000000000000E+0
   LON2    1.35000000000000E+0
   LON3    1.50000000000000E+0
   LON6    1.05000000000000E+0
   LON7    9.00000000000000E-1
   LON10    1.45000000000000E+0
```

```
NonLinearIncrement       0   Yes  "SLU_150"
   LON1    1.35000000000000E+0
   LON2    1.35000000000000E+0
   LON4    1.50000000000000E+0
   LON6    1.05000000000000E+0
   LON7    9.00000000000000E-1
   LON10    1.45000000000000E+0

NonLinearIncrement       0   Yes  "SLU_151"
   LON1    1.35000000000000E+0
   LON2    1.35000000000000E+0
   LON3    1.50000000000000E+0
   LON6    1.05000000000000E+0
   LON9    9.00000000000000E-1
   LON10    1.45000000000000E+0

NonLinearIncrement       0   Yes  "SLU_152"
   LON1    1.35000000000000E+0
   LON2    1.35000000000000E+0
   LON4    1.50000000000000E+0
   LON6    1.05000000000000E+0
   LON9    9.00000000000000E-1
   LON10    1.45000000000000E+0

NonLinearIncrement       0   Yes  "SLU_153"
   LON1    1.35000000000000E+0
   LON2    1.35000000000000E+0
   LON3    1.50000000000000E+0
   LON6    1.05000000000000E+0
   LON8    1.45000000000000E+0
   LON11    9.00000000000000E-1

NonLinearIncrement       0   Yes  "SLU_154"
   LON1    1.35000000000000E+0
   LON2    1.35000000000000E+0
   LON4    1.50000000000000E+0
   LON6    1.05000000000000E+0
   LON8    1.45000000000000E+0
   LON11    9.00000000000000E-1

NonLinearIncrement       0   Yes  "SLU_155"
   LON1    1.35000000000000E+0
   LON2    1.35000000000000E+0
   LON3    1.50000000000000E+0
   LON6    1.05000000000000E+0
   LON8    1.45000000000000E+0
   LON11    9.00000000000000E-1

NonLinearIncrement       0   Yes  "SLU_156"
   LON1    1.35000000000000E+0
   LON2    1.35000000000000E+0
   LON4    1.50000000000000E+0
   LON6    1.05000000000000E+0
```

```
   LON8    1.45000000000000E+0
   LON11    9.00000000000000E-1

NonLinearIncrement       0   Yes  "SLU_157"
   LON1    1.35000000000000E+0
   LON2    1.35000000000000E+0
   LON3    1.50000000000000E+0
   LON6    1.05000000000000E+0
   LON10    1.45000000000000E+0
   LON12    9.00000000000000E-1

NonLinearIncrement       0   Yes  "SLU_158"
   LON1    1.35000000000000E+0
   LON2    1.35000000000000E+0
   LON4    1.50000000000000E+0
   LON6    1.05000000000000E+0
   LON10    1.45000000000000E+0
   LON12    9.00000000000000E-1

NonLinearIncrement       0   Yes  "SLU_159"
   LON1    1.35000000000000E+0
   LON2    1.35000000000000E+0
   LON3    1.50000000000000E+0
   LON6    1.05000000000000E+0
   LON10    1.45000000000000E+0
   LON12    9.00000000000000E-1

NonLinearIncrement       0   Yes  "SLU_160"
   LON1    1.35000000000000E+0
   LON2    1.35000000000000E+0
   LON4    1.50000000000000E+0
   LON6    1.05000000000000E+0
   LON10    1.45000000000000E+0
   LON12    9.00000000000000E-1

NonLinearIncrement       0   Yes  "SLU_161"
   LON1    1.35000000000000E+0
   LON2    1.35000000000000E+0
   LON3    1.50000000000000E+0
   LON7    9.00000000000000E-1
   LON8    1.45000000000000E+0
   LON11    9.00000000000000E-1

NonLinearIncrement       0   Yes  "SLU_162"
   LON1    1.35000000000000E+0
   LON2    1.35000000000000E+0
   LON4    1.50000000000000E+0
   LON7    9.00000000000000E-1
   LON8    1.45000000000000E+0
   LON11    9.00000000000000E-1

NonLinearIncrement       0   Yes  "SLU_163"
   LON1    1.35000000000000E+0
   LON2    1.35000000000000E+0
```

```
   LON3    1.50000000000000E+0
   LON9    9.00000000000000E-1
   LON8    1.45000000000000E+0
   LON11    9.00000000000000E-1

NonLinearIncrement       0   Yes  "SLU_164"
   LON1    1.35000000000000E+0
   LON2    1.35000000000000E+0
   LON4    1.50000000000000E+0
   LON9    9.00000000000000E-1
   LON8    1.45000000000000E+0
   LON11    9.00000000000000E-1

NonLinearIncrement       0   Yes  "SLU_165"
   LON1    1.35000000000000E+0
   LON2    1.35000000000000E+0
   LON3    1.50000000000000E+0
   LON7    9.00000000000000E-1
   LON8    1.45000000000000E+0
   LON12    9.00000000000000E-1

NonLinearIncrement       0   Yes  "SLU_166"
   LON1    1.35000000000000E+0
   LON2    1.35000000000000E+0
   LON4    1.50000000000000E+0
   LON7    9.00000000000000E-1
   LON8    1.45000000000000E+0
   LON12    9.00000000000000E-1

NonLinearIncrement       0   Yes  "SLU_167"
   LON1    1.35000000000000E+0
   LON2    1.35000000000000E+0
   LON3    1.50000000000000E+0
   LON9    9.00000000000000E-1
   LON8    1.45000000000000E+0
   LON12    9.00000000000000E-1

NonLinearIncrement       0   Yes  "SLU_168"
   LON1    1.35000000000000E+0
   LON2    1.35000000000000E+0
   LON4    1.50000000000000E+0
   LON9    9.00000000000000E-1
   LON8    1.45000000000000E+0
   LON12    9.00000000000000E-1

NonLinearIncrement       0   Yes  "SLU_169"
   LON1    1.35000000000000E+0
   LON2    1.35000000000000E+0
   LON3    1.50000000000000E+0
   LON7    9.00000000000000E-1
   LON10    1.45000000000000E+0
   LON11    9.00000000000000E-1

NonLinearIncrement       0   Yes  "SLU_170"
```

```
   LON1    1.35000000000000E+0
   LON2    1.35000000000000E+0
   LON4    1.50000000000000E+0
   LON7    9.00000000000000E-1
   LON10    1.45000000000000E+0
   LON11    9.00000000000000E-1

NonLinearIncrement       0   Yes  "SLU_171"
   LON1    1.35000000000000E+0
   LON2    1.35000000000000E+0
   LON3    1.50000000000000E+0
   LON9    9.00000000000000E-1
   LON10    1.45000000000000E+0
   LON11    9.00000000000000E-1

NonLinearIncrement       0   Yes  "SLU_172"
   LON1    1.35000000000000E+0
   LON2    1.35000000000000E+0
   LON4    1.50000000000000E+0
   LON9    9.00000000000000E-1
   LON10    1.45000000000000E+0
   LON11    9.00000000000000E-1

NonLinearIncrement       0   Yes  "SLU_173"
   LON1    1.35000000000000E+0
   LON2    1.35000000000000E+0
   LON3    1.50000000000000E+0
   LON7    9.00000000000000E-1
   LON10    1.45000000000000E+0
   LON12    9.00000000000000E-1

NonLinearIncrement       0   Yes  "SLU_174"
   LON1    1.35000000000000E+0
   LON2    1.35000000000000E+0
   LON4    1.50000000000000E+0
   LON7    9.00000000000000E-1
   LON10    1.45000000000000E+0
   LON12    9.00000000000000E-1

NonLinearIncrement       0   Yes  "SLU_175"
   LON1    1.35000000000000E+0
   LON2    1.35000000000000E+0
   LON3    1.50000000000000E+0
   LON9    9.00000000000000E-1
   LON10    1.45000000000000E+0
   LON12    9.00000000000000E-1

NonLinearIncrement       0   Yes  "SLU_176"
   LON1    1.35000000000000E+0
   LON2    1.35000000000000E+0
   LON4    1.50000000000000E+0
   LON9    9.00000000000000E-1
   LON10    1.45000000000000E+0
   LON12    9.00000000000000E-1
```

```
NonLinearIncrement       0   Yes  "SLU_177"
   LON1    1.35000000000000E+0
   LON2    1.35000000000000E+0
   LON3    1.50000000000000E+0
   LON6    1.05000000000000E+0
   LON7    9.00000000000000E-1
   LON8    1.45000000000000E+0
   LON11    9.00000000000000E-1

NonLinearIncrement       0   Yes  "SLU_178"
   LON1    1.35000000000000E+0
   LON2    1.35000000000000E+0
   LON4    1.50000000000000E+0
   LON6    1.05000000000000E+0
   LON7    9.00000000000000E-1
   LON8    1.45000000000000E+0
   LON11    9.00000000000000E-1

NonLinearIncrement       0   Yes  "SLU_179"
   LON1    1.35000000000000E+0
   LON2    1.35000000000000E+0
   LON3    1.50000000000000E+0
   LON6    1.05000000000000E+0
   LON9    9.00000000000000E-1
   LON8    1.45000000000000E+0
   LON11    9.00000000000000E-1

NonLinearIncrement       0   Yes  "SLU_180"
   LON1    1.35000000000000E+0
   LON2    1.35000000000000E+0
   LON4    1.50000000000000E+0
   LON6    1.05000000000000E+0
   LON9    9.00000000000000E-1
   LON8    1.45000000000000E+0
   LON11    9.00000000000000E-1

NonLinearIncrement       0   Yes  "SLU_181"
   LON1    1.35000000000000E+0
   LON2    1.35000000000000E+0
   LON3    1.50000000000000E+0
   LON6    1.05000000000000E+0
   LON7    9.00000000000000E-1
   LON8    1.45000000000000E+0
   LON12    9.00000000000000E-1

NonLinearIncrement       0   Yes  "SLU_182"
   LON1    1.35000000000000E+0
   LON2    1.35000000000000E+0
   LON4    1.50000000000000E+0
   LON6    1.05000000000000E+0
   LON7    9.00000000000000E-1
   LON8    1.45000000000000E+0
   LON12    9.00000000000000E-1
```

```
NonLinearIncrement       0   Yes  "SLU_183"
   LON1    1.35000000000000E+0
   LON2    1.35000000000000E+0
   LON3    1.50000000000000E+0
   LON6    1.05000000000000E+0
   LON9    9.00000000000000E-1
   LON8    1.45000000000000E+0
   LON12    9.00000000000000E-1

NonLinearIncrement       0   Yes  "SLU_184"
   LON1    1.35000000000000E+0
   LON2    1.35000000000000E+0
   LON4    1.50000000000000E+0
   LON6    1.05000000000000E+0
   LON9    9.00000000000000E-1
   LON8    1.45000000000000E+0
   LON12    9.00000000000000E-1

NonLinearIncrement       0   Yes  "SLU_185"
   LON1    1.35000000000000E+0
   LON2    1.35000000000000E+0
   LON3    1.50000000000000E+0
   LON6    1.05000000000000E+0
   LON7    9.00000000000000E-1
   LON10    1.45000000000000E+0
   LON11    9.00000000000000E-1

NonLinearIncrement       0   Yes  "SLU_186"
   LON1    1.35000000000000E+0
   LON2    1.35000000000000E+0
   LON4    1.50000000000000E+0
   LON6    1.05000000000000E+0
   LON7    9.00000000000000E-1
   LON10    1.45000000000000E+0
   LON11    9.00000000000000E-1

NonLinearIncrement       0   Yes  "SLU_187"
   LON1    1.35000000000000E+0
   LON2    1.35000000000000E+0
   LON3    1.50000000000000E+0
   LON6    1.05000000000000E+0
   LON9    9.00000000000000E-1
   LON10    1.45000000000000E+0
   LON11    9.00000000000000E-1

NonLinearIncrement       0   Yes  "SLU_188"
   LON1    1.35000000000000E+0
   LON2    1.35000000000000E+0
   LON4    1.50000000000000E+0
   LON6    1.05000000000000E+0
   LON9    9.00000000000000E-1
   LON10    1.45000000000000E+0
   LON11    9.00000000000000E-1
```

```
NonLinearIncrement       0   Yes  "SLU_189"
   LON1    1.35000000000000E+0
   LON2    1.35000000000000E+0
   LON3    1.50000000000000E+0
   LON6    1.05000000000000E+0
   LON7    9.00000000000000E-1
   LON10    1.45000000000000E+0
   LON12    9.00000000000000E-1

NonLinearIncrement       0   Yes  "SLU_190"
   LON1    1.35000000000000E+0
   LON2    1.35000000000000E+0
   LON4    1.50000000000000E+0
   LON6    1.05000000000000E+0
   LON7    9.00000000000000E-1
   LON10    1.45000000000000E+0
   LON12    9.00000000000000E-1

NonLinearIncrement       0   Yes  "SLU_191"
   LON1    1.35000000000000E+0
   LON2    1.35000000000000E+0
   LON3    1.50000000000000E+0
   LON6    1.05000000000000E+0
   LON9    9.00000000000000E-1
   LON10    1.45000000000000E+0
   LON12    9.00000000000000E-1

NonLinearIncrement       0   Yes  "SLU_192"
   LON1    1.35000000000000E+0
   LON2    1.35000000000000E+0
   LON4    1.50000000000000E+0
   LON6    1.05000000000000E+0
   LON9    9.00000000000000E-1
   LON10    1.45000000000000E+0
   LON12    9.00000000000000E-1

NonLinearIncrement       0   Yes  "SLU_193"
   LON1    1.35000000000000E+0
   LON2    1.35000000000000E+0
   LON3    1.50000000000000E+0
   LON6    1.05000000000000E+0
   LON11    1.50000000000000E+0

NonLinearIncrement       0   Yes  "SLU_194"
   LON1    1.35000000000000E+0
   LON2    1.35000000000000E+0
   LON4    1.50000000000000E+0
   LON6    1.05000000000000E+0
   LON11    1.50000000000000E+0

NonLinearIncrement       0   Yes  "SLU_195"
   LON1    1.35000000000000E+0
   LON2    1.35000000000000E+0
```

```
   LON3    1.50000000000000E+0
   LON6    1.05000000000000E+0
   LON12    1.50000000000000E+0

NonLinearIncrement       0   Yes  "SLU_196"
   LON1    1.35000000000000E+0
   LON2    1.35000000000000E+0
   LON4    1.50000000000000E+0
   LON6    1.05000000000000E+0
   LON12    1.50000000000000E+0

NonLinearIncrement       0   Yes  "SLU_197"
   LON1    1.35000000000000E+0
   LON2    1.35000000000000E+0
   LON3    1.50000000000000E+0
   LON7    9.00000000000000E-1
   LON11    1.50000000000000E+0

NonLinearIncrement       0   Yes  "SLU_198"
   LON1    1.35000000000000E+0
   LON2    1.35000000000000E+0
   LON4    1.50000000000000E+0
   LON7    9.00000000000000E-1
   LON11    1.50000000000000E+0

NonLinearIncrement       0   Yes  "SLU_199"
   LON1    1.35000000000000E+0
   LON2    1.35000000000000E+0
   LON3    1.50000000000000E+0
   LON9    9.00000000000000E-1
   LON11    1.50000000000000E+0

NonLinearIncrement       0   Yes  "SLU_200"
   LON1    1.35000000000000E+0
   LON2    1.35000000000000E+0
   LON4    1.50000000000000E+0
   LON9    9.00000000000000E-1
   LON11    1.50000000000000E+0

NonLinearIncrement       0   Yes  "SLU_201"
   LON1    1.35000000000000E+0
   LON2    1.35000000000000E+0
   LON3    1.50000000000000E+0
   LON7    9.00000000000000E-1
   LON12    1.50000000000000E+0

NonLinearIncrement       0   Yes  "SLU_202"
   LON1    1.35000000000000E+0
   LON2    1.35000000000000E+0
   LON4    1.50000000000000E+0
   LON7    9.00000000000000E-1
   LON12    1.50000000000000E+0

NonLinearIncrement       0   Yes  "SLU_203"
```

```
   LON1    1.35000000000000E+0
   LON2    1.35000000000000E+0
   LON3    1.50000000000000E+0
   LON9    9.00000000000000E-1
   LON12    1.50000000000000E+0

NonLinearIncrement       0   Yes  "SLU_204"
   LON1    1.35000000000000E+0
   LON2    1.35000000000000E+0
   LON4    1.50000000000000E+0
   LON9    9.00000000000000E-1
   LON12    1.50000000000000E+0

NonLinearIncrement       0   Yes  "SLU_205"
   LON1    1.35000000000000E+0
   LON2    1.35000000000000E+0
   LON3    1.50000000000000E+0
   LON8    1.16000000000000E+0
   LON11    1.50000000000000E+0

NonLinearIncrement       0   Yes  "SLU_206"
   LON1    1.35000000000000E+0
   LON2    1.35000000000000E+0
   LON4    1.50000000000000E+0
   LON8    1.16000000000000E+0
   LON11    1.50000000000000E+0

NonLinearIncrement       0   Yes  "SLU_207"
   LON1    1.35000000000000E+0
   LON2    1.35000000000000E+0
   LON3    1.50000000000000E+0
   LON8    1.16000000000000E+0
   LON11    1.50000000000000E+0

NonLinearIncrement       0   Yes  "SLU_208"
   LON1    1.35000000000000E+0
   LON2    1.35000000000000E+0
   LON4    1.50000000000000E+0
   LON8    1.16000000000000E+0
   LON11    1.50000000000000E+0

NonLinearIncrement       0   Yes  "SLU_209"
   LON1    1.35000000000000E+0
   LON2    1.35000000000000E+0
   LON3    1.50000000000000E+0
   LON10    1.16000000000000E+0
   LON12    1.50000000000000E+0

NonLinearIncrement       0   Yes  "SLU_210"
   LON1    1.35000000000000E+0
   LON2    1.35000000000000E+0
   LON4    1.50000000000000E+0
   LON10    1.16000000000000E+0
   LON12    1.50000000000000E+0
```

```
NonLinearIncrement       0   Yes  "SLU_211"
   LON1    1.35000000000000E+0
   LON2    1.35000000000000E+0
   LON3    1.50000000000000E+0
   LON10    1.16000000000000E+0
   LON12    1.50000000000000E+0

NonLinearIncrement       0   Yes  "SLU_212"
   LON1    1.35000000000000E+0
   LON2    1.35000000000000E+0
   LON4    1.50000000000000E+0
   LON10    1.16000000000000E+0
   LON12    1.50000000000000E+0

NonLinearIncrement       0   Yes  "SLU_213"
   LON1    1.35000000000000E+0
   LON2    1.35000000000000E+0
   LON3    1.50000000000000E+0
   LON6    1.05000000000000E+0
   LON7    9.00000000000000E-1
   LON11    1.50000000000000E+0

NonLinearIncrement       0   Yes  "SLU_214"
   LON1    1.35000000000000E+0
   LON2    1.35000000000000E+0
   LON4    1.50000000000000E+0
   LON6    1.05000000000000E+0
   LON7    9.00000000000000E-1
   LON11    1.50000000000000E+0

NonLinearIncrement       0   Yes  "SLU_215"
   LON1    1.35000000000000E+0
   LON2    1.35000000000000E+0
   LON3    1.50000000000000E+0
   LON6    1.05000000000000E+0
   LON9    9.00000000000000E-1
   LON11    1.50000000000000E+0

NonLinearIncrement       0   Yes  "SLU_216"
   LON1    1.35000000000000E+0
   LON2    1.35000000000000E+0
   LON4    1.50000000000000E+0
   LON6    1.05000000000000E+0
   LON9    9.00000000000000E-1
   LON11    1.50000000000000E+0

NonLinearIncrement       0   Yes  "SLU_217"
   LON1    1.35000000000000E+0
   LON2    1.35000000000000E+0
   LON3    1.50000000000000E+0
   LON6    1.05000000000000E+0
   LON7    9.00000000000000E-1
   LON12    1.50000000000000E+0
```

```
NonLinearIncrement       0   Yes  "SLU_218"
   LON1    1.35000000000000E+0
   LON2    1.35000000000000E+0
   LON4    1.50000000000000E+0
   LON6    1.05000000000000E+0
   LON7    9.00000000000000E-1
   LON12    1.50000000000000E+0

NonLinearIncrement       0   Yes  "SLU_219"
   LON1    1.35000000000000E+0
   LON2    1.35000000000000E+0
   LON3    1.50000000000000E+0
   LON6    1.05000000000000E+0
   LON9    9.00000000000000E-1
   LON12    1.50000000000000E+0

NonLinearIncrement       0   Yes  "SLU_220"
   LON1    1.35000000000000E+0
   LON2    1.35000000000000E+0
   LON4    1.50000000000000E+0
   LON6    1.05000000000000E+0
   LON9    9.00000000000000E-1
   LON12    1.50000000000000E+0

NonLinearIncrement       0   Yes  "SLU_221"
   LON1    1.35000000000000E+0
   LON2    1.35000000000000E+0
   LON3    1.50000000000000E+0
   LON6    1.05000000000000E+0
   LON8    1.16000000000000E+0
   LON11    1.50000000000000E+0

NonLinearIncrement       0   Yes  "SLU_222"
   LON1    1.35000000000000E+0
   LON2    1.35000000000000E+0
   LON4    1.50000000000000E+0
   LON6    1.05000000000000E+0
   LON8    1.16000000000000E+0
   LON11    1.50000000000000E+0

NonLinearIncrement       0   Yes  "SLU_223"
   LON1    1.35000000000000E+0
   LON2    1.35000000000000E+0
   LON3    1.50000000000000E+0
   LON6    1.05000000000000E+0
   LON8    1.16000000000000E+0
   LON11    1.50000000000000E+0

NonLinearIncrement       0   Yes  "SLU_224"
   LON1    1.35000000000000E+0
   LON2    1.35000000000000E+0
   LON4    1.50000000000000E+0
   LON6    1.05000000000000E+0
```

```
   LON8    1.16000000000000E+0
   LON11    1.50000000000000E+0

NonLinearIncrement       0   Yes  "SLU_225"
   LON1    1.35000000000000E+0
   LON2    1.35000000000000E+0
   LON3    1.50000000000000E+0
   LON6    1.05000000000000E+0
   LON10    1.16000000000000E+0
   LON12    1.50000000000000E+0

NonLinearIncrement       0   Yes  "SLU_226"
   LON1    1.35000000000000E+0
   LON2    1.35000000000000E+0
   LON4    1.50000000000000E+0
   LON6    1.05000000000000E+0
   LON10    1.16000000000000E+0
   LON12    1.50000000000000E+0

NonLinearIncrement       0   Yes  "SLU_227"
   LON1    1.35000000000000E+0
   LON2    1.35000000000000E+0
   LON3    1.50000000000000E+0
   LON6    1.05000000000000E+0
   LON10    1.16000000000000E+0
   LON12    1.50000000000000E+0

NonLinearIncrement       0   Yes  "SLU_228"
   LON1    1.35000000000000E+0
   LON2    1.35000000000000E+0
   LON4    1.50000000000000E+0
   LON6    1.05000000000000E+0
   LON10    1.16000000000000E+0
   LON12    1.50000000000000E+0

NonLinearIncrement       0   Yes  "SLU_229"
   LON1    1.35000000000000E+0
   LON2    1.35000000000000E+0
   LON3    1.50000000000000E+0
   LON7    9.00000000000000E-1
   LON8    1.16000000000000E+0
   LON11    1.50000000000000E+0

NonLinearIncrement       0   Yes  "SLU_230"
   LON1    1.35000000000000E+0
   LON2    1.35000000000000E+0
   LON4    1.50000000000000E+0
   LON7    9.00000000000000E-1
   LON8    1.16000000000000E+0
   LON11    1.50000000000000E+0

NonLinearIncrement       0   Yes  "SLU_231"
   LON1    1.35000000000000E+0
   LON2    1.35000000000000E+0
```

```
   LON3    1.50000000000000E+0
   LON9    9.00000000000000E-1
   LON8    1.16000000000000E+0
   LON11    1.50000000000000E+0

NonLinearIncrement       0   Yes  "SLU_232"
   LON1    1.35000000000000E+0
   LON2    1.35000000000000E+0
   LON4    1.50000000000000E+0
   LON9    9.00000000000000E-1
   LON8    1.16000000000000E+0
   LON11    1.50000000000000E+0

NonLinearIncrement       0   Yes  "SLU_233"
   LON1    1.35000000000000E+0
   LON2    1.35000000000000E+0
   LON3    1.50000000000000E+0
   LON7    9.00000000000000E-1
   LON8    1.16000000000000E+0
   LON12    1.50000000000000E+0

NonLinearIncrement       0   Yes  "SLU_234"
   LON1    1.35000000000000E+0
   LON2    1.35000000000000E+0
   LON4    1.50000000000000E+0
   LON7    9.00000000000000E-1
   LON8    1.16000000000000E+0
   LON12    1.50000000000000E+0

NonLinearIncrement       0   Yes  "SLU_235"
   LON1    1.35000000000000E+0
   LON2    1.35000000000000E+0
   LON3    1.50000000000000E+0
   LON9    9.00000000000000E-1
   LON8    1.16000000000000E+0
   LON12    1.50000000000000E+0

NonLinearIncrement       0   Yes  "SLU_236"
   LON1    1.35000000000000E+0
   LON2    1.35000000000000E+0
   LON4    1.50000000000000E+0
   LON9    9.00000000000000E-1
   LON8    1.16000000000000E+0
   LON12    1.50000000000000E+0

NonLinearIncrement       0   Yes  "SLU_237"
   LON1    1.35000000000000E+0
   LON2    1.35000000000000E+0
   LON3    1.50000000000000E+0
   LON7    9.00000000000000E-1
   LON10    1.16000000000000E+0
   LON11    1.50000000000000E+0

NonLinearIncrement       0   Yes  "SLU_238"
```

```
   LON1    1.35000000000000E+0
   LON2    1.35000000000000E+0
   LON4    1.50000000000000E+0
   LON7    9.00000000000000E-1
   LON10    1.16000000000000E+0
   LON11    1.50000000000000E+0

NonLinearIncrement       0   Yes  "SLU_239"
   LON1    1.35000000000000E+0
   LON2    1.35000000000000E+0
   LON3    1.50000000000000E+0
   LON9    9.00000000000000E-1
   LON10    1.16000000000000E+0
   LON11    1.50000000000000E+0

NonLinearIncrement       0   Yes  "SLU_240"
   LON1    1.35000000000000E+0
   LON2    1.35000000000000E+0
   LON4    1.50000000000000E+0
   LON9    9.00000000000000E-1
   LON10    1.16000000000000E+0
   LON11    1.50000000000000E+0

NonLinearIncrement       0   Yes  "SLU_241"
   LON1    1.35000000000000E+0
   LON2    1.35000000000000E+0
   LON3    1.50000000000000E+0
   LON7    9.00000000000000E-1
   LON10    1.16000000000000E+0
   LON12    1.50000000000000E+0

NonLinearIncrement       0   Yes  "SLU_242"
   LON1    1.35000000000000E+0
   LON2    1.35000000000000E+0
   LON4    1.50000000000000E+0
   LON7    9.00000000000000E-1
   LON10    1.16000000000000E+0
   LON12    1.50000000000000E+0

NonLinearIncrement       0   Yes  "SLU_243"
   LON1    1.35000000000000E+0
   LON2    1.35000000000000E+0
   LON3    1.50000000000000E+0
   LON9    9.00000000000000E-1
   LON10    1.16000000000000E+0
   LON12    1.50000000000000E+0

NonLinearIncrement       0   Yes  "SLU_244"
   LON1    1.35000000000000E+0
   LON2    1.35000000000000E+0
   LON4    1.50000000000000E+0
   LON9    9.00000000000000E-1
   LON10    1.16000000000000E+0
   LON12    1.50000000000000E+0
```

```
NonLinearIncrement       0   Yes  "SLU_245"
   LON1    1.35000000000000E+0
   LON2    1.35000000000000E+0
   LON3    1.50000000000000E+0
   LON6    1.05000000000000E+0
   LON7    9.00000000000000E-1
   LON8    1.16000000000000E+0
   LON11    1.50000000000000E+0

NonLinearIncrement       0   Yes  "SLU_246"
   LON1    1.35000000000000E+0
   LON2    1.35000000000000E+0
   LON4    1.50000000000000E+0
   LON6    1.05000000000000E+0
   LON7    9.00000000000000E-1
   LON8    1.16000000000000E+0
   LON11    1.50000000000000E+0

NonLinearIncrement       0   Yes  "SLU_247"
   LON1    1.35000000000000E+0
   LON2    1.35000000000000E+0
   LON3    1.50000000000000E+0
   LON6    1.05000000000000E+0
   LON9    9.00000000000000E-1
   LON8    1.16000000000000E+0
   LON11    1.50000000000000E+0

NonLinearIncrement       0   Yes  "SLU_248"
   LON1    1.35000000000000E+0
   LON2    1.35000000000000E+0
   LON4    1.50000000000000E+0
   LON6    1.05000000000000E+0
   LON9    9.00000000000000E-1
   LON8    1.16000000000000E+0
   LON11    1.50000000000000E+0

NonLinearIncrement       0   Yes  "SLU_249"
   LON1    1.35000000000000E+0
   LON2    1.35000000000000E+0
   LON3    1.50000000000000E+0
   LON6    1.05000000000000E+0
   LON7    9.00000000000000E-1
   LON8    1.16000000000000E+0
   LON12    1.50000000000000E+0

NonLinearIncrement       0   Yes  "SLU_250"
   LON1    1.35000000000000E+0
   LON2    1.35000000000000E+0
   LON4    1.50000000000000E+0
   LON6    1.05000000000000E+0
   LON7    9.00000000000000E-1
   LON8    1.16000000000000E+0
   LON12    1.50000000000000E+0
```

```
NonLinearIncrement       0   Yes  "SLU_251"
   LON1    1.35000000000000E+0
   LON2    1.35000000000000E+0
   LON3    1.50000000000000E+0
   LON6    1.05000000000000E+0
   LON9    9.00000000000000E-1
   LON8    1.16000000000000E+0
   LON12    1.50000000000000E+0

NonLinearIncrement       0   Yes  "SLU_252"
   LON1    1.35000000000000E+0
   LON2    1.35000000000000E+0
   LON4    1.50000000000000E+0
   LON6    1.05000000000000E+0
   LON9    9.00000000000000E-1
   LON8    1.16000000000000E+0
   LON12    1.50000000000000E+0

NonLinearIncrement       0   Yes  "SLU_253"
   LON1    1.35000000000000E+0
   LON2    1.35000000000000E+0
   LON3    1.50000000000000E+0
   LON6    1.05000000000000E+0
   LON7    9.00000000000000E-1
   LON10    1.16000000000000E+0
   LON11    1.50000000000000E+0

NonLinearIncrement       0   Yes  "SLU_254"
   LON1    1.35000000000000E+0
   LON2    1.35000000000000E+0
   LON4    1.50000000000000E+0
   LON6    1.05000000000000E+0
   LON7    9.00000000000000E-1
   LON10    1.16000000000000E+0
   LON11    1.50000000000000E+0

NonLinearIncrement       0   Yes  "SLU_255"
   LON1    1.35000000000000E+0
   LON2    1.35000000000000E+0
   LON3    1.50000000000000E+0
   LON6    1.05000000000000E+0
   LON9    9.00000000000000E-1
   LON10    1.16000000000000E+0
   LON11    1.50000000000000E+0

NonLinearIncrement       0   Yes  "SLU_256"
   LON1    1.35000000000000E+0
   LON2    1.35000000000000E+0
   LON4    1.50000000000000E+0
   LON6    1.05000000000000E+0
   LON9    9.00000000000000E-1
   LON10    1.16000000000000E+0
   LON11    1.50000000000000E+0
```

```
NonLinearIncrement       0   Yes  "SLU_257"
   LON1    1.35000000000000E+0
   LON2    1.35000000000000E+0
   LON3    1.50000000000000E+0
   LON6    1.05000000000000E+0
   LON7    9.00000000000000E-1
   LON10    1.16000000000000E+0
   LON12    1.50000000000000E+0

NonLinearIncrement       0   Yes  "SLU_258"
   LON1    1.35000000000000E+0
   LON2    1.35000000000000E+0
   LON4    1.50000000000000E+0
   LON6    1.05000000000000E+0
   LON7    9.00000000000000E-1
   LON10    1.16000000000000E+0
   LON12    1.50000000000000E+0

NonLinearIncrement       0   Yes  "SLU_259"
   LON1    1.35000000000000E+0
   LON2    1.35000000000000E+0
   LON3    1.50000000000000E+0
   LON6    1.05000000000000E+0
   LON9    9.00000000000000E-1
   LON10    1.16000000000000E+0
   LON12    1.50000000000000E+0

NonLinearIncrement       0   Yes  "SLU_260"
   LON1    1.35000000000000E+0
   LON2    1.35000000000000E+0
   LON4    1.50000000000000E+0
   LON6    1.05000000000000E+0
   LON9    9.00000000000000E-1
   LON10    1.16000000000000E+0
   LON12    1.50000000000000E+0

NonLinearIncrement       0   Yes  "SLV_01"
   LON1    1.00000000000000E+0
   LON2    1.00000000000000E+0
   LON3    1.00000000000000E+0
   LON13    1.00000000000000E+0
   LON14    3.00000000000000E-1
   LON15    3.00000000000000E-1

NonLinearIncrement       0   Yes  "SLV_02"
   LON1    1.00000000000000E+0
   LON2    1.00000000000000E+0
   LON4    1.00000000000000E+0
   LON13    1.00000000000000E+0
   LON14    3.00000000000000E-1
   LON15    3.00000000000000E-1

NonLinearIncrement       0   Yes  "SLV_03"
```

```
   LON1    1.00000000000000E+0
   LON2    1.00000000000000E+0
   LON3    1.00000000000000E+0
   LON13   -1.00000000000000E+0
   LON14    3.00000000000000E-1
   LON15    3.00000000000000E-1

NonLinearIncrement       0   Yes  "SLV_04"
   LON1    1.00000000000000E+0
   LON2    1.00000000000000E+0
   LON4    1.00000000000000E+0
   LON13   -1.00000000000000E+0
   LON14    3.00000000000000E-1
   LON15    3.00000000000000E-1

NonLinearIncrement       0   Yes  "SLV_05"
   LON1    1.00000000000000E+0
   LON2    1.00000000000000E+0
   LON3    1.00000000000000E+0
   LON5    2.00000000000000E-1
   LON13    1.00000000000000E+0
   LON14    3.00000000000000E-1
   LON15    3.00000000000000E-1

NonLinearIncrement       0   Yes  "SLV_06"
   LON1    1.00000000000000E+0
   LON2    1.00000000000000E+0
   LON4    1.00000000000000E+0
   LON5    2.00000000000000E-1
   LON13    1.00000000000000E+0
   LON14    3.00000000000000E-1
   LON15    3.00000000000000E-1

NonLinearIncrement       0   Yes  "SLV_07"
   LON1    1.00000000000000E+0
   LON2    1.00000000000000E+0
   LON3    1.00000000000000E+0
   LON5    2.00000000000000E-1
   LON13   -1.00000000000000E+0
   LON14    3.00000000000000E-1
   LON15    3.00000000000000E-1

NonLinearIncrement       0   Yes  "SLV_08"
   LON1    1.00000000000000E+0
   LON2    1.00000000000000E+0
   LON4    1.00000000000000E+0
   LON5    2.00000000000000E-1
   LON13   -1.00000000000000E+0
   LON14    3.00000000000000E-1
   LON15    3.00000000000000E-1

NonLinearIncrement       0   Yes  "SLV_09"
   LON1    1.00000000000000E+0
   LON2    1.00000000000000E+0
```

```
   LON3    1.00000000000000E+0
   LON13    3.00000000000000E-1
   LON14    1.00000000000000E+0
   LON15    3.00000000000000E-1

NonLinearIncrement       0   Yes  "SLV_10"
   LON1    1.00000000000000E+0
   LON2    1.00000000000000E+0
   LON4    1.00000000000000E+0
   LON13    3.00000000000000E-1
   LON14    1.00000000000000E+0
   LON15    3.00000000000000E-1

NonLinearIncrement       0   Yes  "SLV_11"
   LON1    1.00000000000000E+0
   LON2    1.00000000000000E+0
   LON3    1.00000000000000E+0
   LON13    3.00000000000000E-1
   LON14   -1.00000000000000E+0
   LON15    3.00000000000000E-1

NonLinearIncrement       0   Yes  "SLV_12"
   LON1    1.00000000000000E+0
   LON2    1.00000000000000E+0
   LON4    1.00000000000000E+0
   LON13    3.00000000000000E-1
   LON14   -1.00000000000000E+0
   LON15    3.00000000000000E-1

NonLinearIncrement       0   Yes  "SLV_13"
   LON1    1.00000000000000E+0
   LON2    1.00000000000000E+0
   LON3    1.00000000000000E+0
   LON5    2.00000000000000E-1
   LON13    3.00000000000000E-1
   LON14    1.00000000000000E+0
   LON15    3.00000000000000E-1

NonLinearIncrement       0   Yes  "SLV_14"
   LON1    1.00000000000000E+0
   LON2    1.00000000000000E+0
   LON4    1.00000000000000E+0
   LON5    2.00000000000000E-1
   LON13    3.00000000000000E-1
   LON14    1.00000000000000E+0
   LON15    3.00000000000000E-1

NonLinearIncrement       0   Yes  "SLV_15"
   LON1    1.00000000000000E+0
   LON2    1.00000000000000E+0
   LON3    1.00000000000000E+0
   LON5    2.00000000000000E-1
   LON13    3.00000000000000E-1
   LON14   -1.00000000000000E+0
```

```
   LON15    3.00000000000000E-1

NonLinearIncrement       0   Yes  "SLV_16"
   LON1    1.00000000000000E+0
   LON2    1.00000000000000E+0
   LON4    1.00000000000000E+0
   LON5    2.00000000000000E-1
   LON13    3.00000000000000E-1
   LON14   -1.00000000000000E+0
   LON15    3.00000000000000E-1

NonLinearIncrement       0   Yes  "SLV_17"
   LON1    1.00000000000000E+0
   LON2    1.00000000000000E+0
   LON3    1.00000000000000E+0
   LON13    3.00000000000000E-1
   LON14    3.00000000000000E-1
   LON15    1.00000000000000E+0

NonLinearIncrement       0   Yes  "SLV_18"
   LON1    1.00000000000000E+0
   LON2    1.00000000000000E+0
   LON4    1.00000000000000E+0
   LON13    3.00000000000000E-1
   LON14    3.00000000000000E-1
   LON15    1.00000000000000E+0

NonLinearIncrement       0   Yes  "SLV_19"
   LON1    1.00000000000000E+0
   LON2    1.00000000000000E+0
   LON3    1.00000000000000E+0
   LON13    3.00000000000000E-1
   LON14    3.00000000000000E-1
   LON15   -1.00000000000000E+0

NonLinearIncrement       0   Yes  "SLV_20"
   LON1    1.00000000000000E+0
   LON2    1.00000000000000E+0
   LON4    1.00000000000000E+0
   LON13    3.00000000000000E-1
   LON14    3.00000000000000E-1
   LON15   -1.00000000000000E+0

NonLinearIncrement       0   Yes  "SLV_21"
   LON1    1.00000000000000E+0
   LON2    1.00000000000000E+0
   LON3    1.00000000000000E+0
   LON5    2.00000000000000E-1
   LON13    3.00000000000000E-1
   LON14    3.00000000000000E-1
   LON15    1.00000000000000E+0

NonLinearIncrement       0   Yes  "SLV_22"
   LON1    1.00000000000000E+0
```

```
   LON2    1.00000000000000E+0
   LON4    1.00000000000000E+0
   LON5    2.00000000000000E-1
   LON13    3.00000000000000E-1
   LON14    3.00000000000000E-1
   LON15    1.00000000000000E+0

NonLinearIncrement       0   Yes  "SLV_23"
   LON1    1.00000000000000E+0
   LON2    1.00000000000000E+0
   LON3    1.00000000000000E+0
   LON5    2.00000000000000E-1
   LON13    3.00000000000000E-1
   LON14    3.00000000000000E-1
   LON15   -1.00000000000000E+0

NonLinearIncrement       0   Yes  "SLV_24"
   LON1    1.00000000000000E+0
   LON2    1.00000000000000E+0
   LON4    1.00000000000000E+0
   LON5    2.00000000000000E-1
   LON13    3.00000000000000E-1
   LON14    3.00000000000000E-1
   LON15   -1.00000000000000E+0

NonLinearIncrement       0   Yes  "SLE_000"
   LON1    1.00000000000000E+0
   LON2    1.00000000000000E+0
   LON3    1.00000000000000E+0

NonLinearIncrement       0   Yes  "SLE_001"
   LON1    1.00000000000000E+0
   LON2    1.00000000000000E+0
   LON4    1.00000000000000E+0

NonLinearIncrement       0   Yes  "SLE_01"
   LON1    1.00000000000000E+0
   LON2    1.00000000000000E+0
   LON3    1.00000000000000E+0
   LON5    1.00000000000000E+0

NonLinearIncrement       0   Yes  "SLE_02"
   LON1    1.00000000000000E+0
   LON2    1.00000000000000E+0
   LON4    1.00000000000000E+0
   LON5    1.00000000000000E+0

NonLinearIncrement       0   Yes  "SLE_03"
   LON1    1.00000000000000E+0
   LON2    1.00000000000000E+0
   LON3    1.00000000000000E+0
   LON6    1.00000000000000E+0

NonLinearIncrement       0   Yes  "SLE_04"
```

```
   LON1    1.00000000000000E+0
   LON2    1.00000000000000E+0
   LON4    1.00000000000000E+0
   LON6    1.00000000000000E+0

NonLinearIncrement       0   Yes  "SLE_05"
   LON1    1.00000000000000E+0
   LON2    1.00000000000000E+0
   LON3    1.00000000000000E+0
   LON7    1.00000000000000E+0

NonLinearIncrement       0   Yes  "SLE_06"
   LON1    1.00000000000000E+0
   LON2    1.00000000000000E+0
   LON4    1.00000000000000E+0
   LON7    1.00000000000000E+0

NonLinearIncrement       0   Yes  "SLE_07"
   LON1    1.00000000000000E+0
   LON2    1.00000000000000E+0
   LON3    1.00000000000000E+0
   LON9    1.00000000000000E+0

NonLinearIncrement       0   Yes  "SLE_08"
   LON1    1.00000000000000E+0
   LON2    1.00000000000000E+0
   LON4    1.00000000000000E+0
   LON9    1.00000000000000E+0

NonLinearIncrement       0   Yes  "SLE_09"
   LON1    1.00000000000000E+0
   LON2    1.00000000000000E+0
   LON3    1.00000000000000E+0
   LON8    1.00000000000000E+0

NonLinearIncrement       0   Yes  "SLE_10"
   LON1    1.00000000000000E+0
   LON2    1.00000000000000E+0
   LON4    1.00000000000000E+0
   LON8    1.00000000000000E+0

NonLinearIncrement       0   Yes  "SLE_11"
   LON1    1.00000000000000E+0
   LON2    1.00000000000000E+0
   LON3    1.00000000000000E+0
   LON10    1.00000000000000E+0

NonLinearIncrement       0   Yes  "SLE_12"
   LON1    1.00000000000000E+0
   LON2    1.00000000000000E+0
   LON4    1.00000000000000E+0
   LON10    1.00000000000000E+0

NonLinearIncrement       0   Yes  "SLE_13"
```

```
   LON1    1.00000000000000E+0
   LON2    1.00000000000000E+0
   LON3    1.00000000000000E+0
   LON11    1.00000000000000E+0

NonLinearIncrement       0   Yes  "SLE_14"
   LON1    1.00000000000000E+0
   LON2    1.00000000000000E+0
   LON4    1.00000000000000E+0
   LON11    1.00000000000000E+0

NonLinearIncrement       0   Yes  "SLE_15"
   LON1    1.00000000000000E+0
   LON2    1.00000000000000E+0
   LON3    1.00000000000000E+0
   LON12    1.00000000000000E+0

NonLinearIncrement       0   Yes  "SLE_16"
   LON1    1.00000000000000E+0
   LON2    1.00000000000000E+0
   LON4    1.00000000000000E+0
   LON12    1.00000000000000E+0

NonLinearIncrement       0   Yes  "SLE_17"
   LON1    1.00000000000000E+0
   LON2    1.00000000000000E+0
   LON3    1.00000000000000E+0
   LON5    1.00000000000000E+0
   LON7    6.00000000000000E-1

NonLinearIncrement       0   Yes  "SLE_18"
   LON1    1.00000000000000E+0
   LON2    1.00000000000000E+0
   LON4    1.00000000000000E+0
   LON5    1.00000000000000E+0
   LON7    6.00000000000000E-1

NonLinearIncrement       0   Yes  "SLE_19"
   LON1    1.00000000000000E+0
   LON2    1.00000000000000E+0
   LON3    1.00000000000000E+0
   LON5    1.00000000000000E+0
   LON9    6.00000000000000E-1

NonLinearIncrement       0   Yes  "SLE_20"
   LON1    1.00000000000000E+0
   LON2    1.00000000000000E+0
   LON4    1.00000000000000E+0
   LON5    1.00000000000000E+0
   LON9    6.00000000000000E-1

NonLinearIncrement       0   Yes  "SLE_21"
   LON1    1.00000000000000E+0
   LON2    1.00000000000000E+0
```

```
   LON3    1.00000000000000E+0
   LON5    1.00000000000000E+0
   LON11    6.00000000000000E-1

NonLinearIncrement       0   Yes  "SLE_22"
   LON1    1.00000000000000E+0
   LON2    1.00000000000000E+0
   LON4    1.00000000000000E+0
   LON5    1.00000000000000E+0
   LON11    6.00000000000000E-1

NonLinearIncrement       0   Yes  "SLE_23"
   LON1    1.00000000000000E+0
   LON2    1.00000000000000E+0
   LON3    1.00000000000000E+0
   LON5    1.00000000000000E+0
   LON12    6.00000000000000E-1

NonLinearIncrement       0   Yes  "SLE_24"
   LON1    1.00000000000000E+0
   LON2    1.00000000000000E+0
   LON4    1.00000000000000E+0
   LON5    1.00000000000000E+0
   LON12    6.00000000000000E-1

NonLinearIncrement       0   Yes  "SLE_25"
   LON1    1.00000000000000E+0
   LON2    1.00000000000000E+0
   LON3    1.00000000000000E+0
   LON5    1.00000000000000E+0
   LON7    6.00000000000000E-1
   LON11    6.00000000000000E-1

NonLinearIncrement       0   Yes  "SLE_26"
   LON1    1.00000000000000E+0
   LON2    1.00000000000000E+0
   LON4    1.00000000000000E+0
   LON5    1.00000000000000E+0
   LON7    6.00000000000000E-1
   LON11    6.00000000000000E-1

NonLinearIncrement       0   Yes  "SLE_27"
   LON1    1.00000000000000E+0
   LON2    1.00000000000000E+0
   LON3    1.00000000000000E+0
   LON5    1.00000000000000E+0
   LON9    6.00000000000000E-1
   LON12    6.00000000000000E-1

NonLinearIncrement       0   Yes  "SLE_28"
   LON1    1.00000000000000E+0
   LON2    1.00000000000000E+0
   LON4    1.00000000000000E+0
   LON5    1.00000000000000E+0
```

```
   LON9    6.00000000000000E-1
   LON12    6.00000000000000E-1

NonLinearIncrement       0   Yes  "SLE_29"
   LON1    1.00000000000000E+0
   LON2    1.00000000000000E+0
   LON3    1.00000000000000E+0
   LON6    1.00000000000000E+0
   LON7    6.00000000000000E-1

NonLinearIncrement       0   Yes  "SLE_30"
   LON1    1.00000000000000E+0
   LON2    1.00000000000000E+0
   LON4    1.00000000000000E+0
   LON6    1.00000000000000E+0
   LON7    6.00000000000000E-1

NonLinearIncrement       0   Yes  "SLE_31"
   LON1    1.00000000000000E+0
   LON2    1.00000000000000E+0
   LON3    1.00000000000000E+0
   LON6    1.00000000000000E+0
   LON9    6.00000000000000E-1

NonLinearIncrement       0   Yes  "SLE_32"
   LON1    1.00000000000000E+0
   LON2    1.00000000000000E+0
   LON4    1.00000000000000E+0
   LON6    1.00000000000000E+0
   LON9    6.00000000000000E-1

NonLinearIncrement       0   Yes  "SLE_33"
   LON1    1.00000000000000E+0
   LON2    1.00000000000000E+0
   LON3    1.00000000000000E+0
   LON6    1.00000000000000E+0
   LON8    8.00000000000000E-1

NonLinearIncrement       0   Yes  "SLE_34"
   LON1    1.00000000000000E+0
   LON2    1.00000000000000E+0
   LON4    1.00000000000000E+0
   LON6    1.00000000000000E+0
   LON8    8.00000000000000E-1

NonLinearIncrement       0   Yes  "SLE_35"
   LON1    1.00000000000000E+0
   LON2    1.00000000000000E+0
   LON3    1.00000000000000E+0
   LON6    1.00000000000000E+0
   LON10    8.00000000000000E-1

NonLinearIncrement       0   Yes  "SLE_36"
   LON1    1.00000000000000E+0
```

```
   LON2    1.00000000000000E+0
   LON4    1.00000000000000E+0
   LON6    1.00000000000000E+0
   LON10    8.00000000000000E-1

NonLinearIncrement       0   Yes  "SLE_37"
   LON1    1.00000000000000E+0
   LON2    1.00000000000000E+0
   LON3    1.00000000000000E+0
   LON6    1.00000000000000E+0
   LON11    6.00000000000000E-1

NonLinearIncrement       0   Yes  "SLE_38"
   LON1    1.00000000000000E+0
   LON2    1.00000000000000E+0
   LON4    1.00000000000000E+0
   LON6    1.00000000000000E+0
   LON11    6.00000000000000E-1

NonLinearIncrement       0   Yes  "SLE_39"
   LON1    1.00000000000000E+0
   LON2    1.00000000000000E+0
   LON3    1.00000000000000E+0
   LON6    1.00000000000000E+0
   LON12    6.00000000000000E-1

NonLinearIncrement       0   Yes  "SLE_40"
   LON1    1.00000000000000E+0
   LON2    1.00000000000000E+0
   LON4    1.00000000000000E+0
   LON6    1.00000000000000E+0
   LON12    6.00000000000000E-1

NonLinearIncrement       0   Yes  "SLE_41"
   LON1    1.00000000000000E+0
   LON2    1.00000000000000E+0
   LON3    1.00000000000000E+0
   LON6    1.00000000000000E+0
   LON7    6.00000000000000E-1
   LON8    8.00000000000000E-1

NonLinearIncrement       0   Yes  "SLE_42"
   LON1    1.00000000000000E+0
   LON2    1.00000000000000E+0
   LON4    1.00000000000000E+0
   LON6    1.00000000000000E+0
   LON7    6.00000000000000E-1
   LON8    8.00000000000000E-1

NonLinearIncrement       0   Yes  "SLE_43"
   LON1    1.00000000000000E+0
   LON2    1.00000000000000E+0
   LON3    1.00000000000000E+0
   LON6    1.00000000000000E+0
```

```
   LON9    6.00000000000000E-1
   LON10    8.00000000000000E-1

NonLinearIncrement       0   Yes  "SLE_44"
   LON1    1.00000000000000E+0
   LON2    1.00000000000000E+0
   LON4    1.00000000000000E+0
   LON6    1.00000000000000E+0
   LON9    6.00000000000000E-1
   LON10    8.00000000000000E-1

NonLinearIncrement       0   Yes  "SLE_45"
   LON1    1.00000000000000E+0
   LON2    1.00000000000000E+0
   LON3    1.00000000000000E+0
   LON6    1.00000000000000E+0
   LON7    6.00000000000000E-1
   LON11    6.00000000000000E-1

NonLinearIncrement       0   Yes  "SLE_46"
   LON1    1.00000000000000E+0
   LON2    1.00000000000000E+0
   LON4    1.00000000000000E+0
   LON6    1.00000000000000E+0
   LON7    6.00000000000000E-1
   LON11    6.00000000000000E-1

NonLinearIncrement       0   Yes  "SLE_47"
   LON1    1.00000000000000E+0
   LON2    1.00000000000000E+0
   LON3    1.00000000000000E+0
   LON6    1.00000000000000E+0
   LON9    6.00000000000000E-1
   LON12    6.00000000000000E-1

NonLinearIncrement       0   Yes  "SLE_48"
   LON1    1.00000000000000E+0
   LON2    1.00000000000000E+0
   LON4    1.00000000000000E+0
   LON6    1.00000000000000E+0
   LON9    6.00000000000000E-1
   LON12    6.00000000000000E-1

NonLinearIncrement       0   Yes  "SLE_49"
   LON1    1.00000000000000E+0
   LON2    1.00000000000000E+0
   LON3    1.00000000000000E+0
   LON6    1.00000000000000E+0
   LON8    8.00000000000000E-1
   LON11    6.00000000000000E-1

NonLinearIncrement       0   Yes  "SLE_50"
   LON1    1.00000000000000E+0
   LON2    1.00000000000000E+0
```

```
   LON4    1.00000000000000E+0
   LON6    1.00000000000000E+0
   LON8    8.00000000000000E-1
   LON11    6.00000000000000E-1

NonLinearIncrement       0   Yes  "SLE_51"
   LON1    1.00000000000000E+0
   LON2    1.00000000000000E+0
   LON3    1.00000000000000E+0
   LON6    1.00000000000000E+0
   LON10    8.00000000000000E-1
   LON12    6.00000000000000E-1

NonLinearIncrement       0   Yes  "SLE_52"
   LON1    1.00000000000000E+0
   LON2    1.00000000000000E+0
   LON4    1.00000000000000E+0
   LON6    1.00000000000000E+0
   LON10    8.00000000000000E-1
   LON12    6.00000000000000E-1

NonLinearIncrement       0   Yes  "SLE_53"
   LON1    1.00000000000000E+0
   LON2    1.00000000000000E+0
   LON3    1.00000000000000E+0
   LON6    1.00000000000000E+0
   LON7    6.00000000000000E-1
   LON8    8.00000000000000E-1
   LON11    6.00000000000000E-1

NonLinearIncrement       0   Yes  "SLE_54"
   LON1    1.00000000000000E+0
   LON2    1.00000000000000E+0
   LON4    1.00000000000000E+0
   LON6    1.00000000000000E+0
   LON7    6.00000000000000E-1
   LON8    8.00000000000000E-1
   LON11    6.00000000000000E-1

NonLinearIncrement       0   Yes  "SLE_55"
   LON1    1.00000000000000E+0
   LON2    1.00000000000000E+0
   LON3    1.00000000000000E+0
   LON6    1.00000000000000E+0
   LON9    6.00000000000000E-1
   LON10    8.00000000000000E-1
   LON12    6.00000000000000E-1

NonLinearIncrement       0   Yes  "SLE_56"
   LON1    1.00000000000000E+0
   LON2    1.00000000000000E+0
   LON4    1.00000000000000E+0
   LON6    1.00000000000000E+0
   LON9    6.00000000000000E-1
```

```
   LON10    8.00000000000000E-1
   LON12    6.00000000000000E-1

NonLinearIncrement       0   Yes  "SLE_57"
   LON1    1.00000000000000E+0
   LON2    1.00000000000000E+0
   LON3    1.00000000000000E+0
   LON6    7.00000000000000E-1
   LON7    1.00000000000000E+0

NonLinearIncrement       0   Yes  "SLE_58"
   LON1    1.00000000000000E+0
   LON2    1.00000000000000E+0
   LON4    1.00000000000000E+0
   LON6    7.00000000000000E-1
   LON7    1.00000000000000E+0

NonLinearIncrement       0   Yes  "SLE_59"
   LON1    1.00000000000000E+0
   LON2    1.00000000000000E+0
   LON3    1.00000000000000E+0
   LON6    7.00000000000000E-1
   LON9    1.00000000000000E+0

NonLinearIncrement       0   Yes  "SLE_60"
   LON1    1.00000000000000E+0
   LON2    1.00000000000000E+0
   LON4    1.00000000000000E+0
   LON6    7.00000000000000E-1
   LON9    1.00000000000000E+0

NonLinearIncrement       0   Yes  "SLE_61"
   LON1    1.00000000000000E+0
   LON2    1.00000000000000E+0
   LON3    1.00000000000000E+0
   LON7    1.00000000000000E+0
   LON8    8.00000000000000E-1

NonLinearIncrement       0   Yes  "SLE_62"
   LON1    1.00000000000000E+0
   LON2    1.00000000000000E+0
   LON4    1.00000000000000E+0
   LON7    1.00000000000000E+0
   LON8    8.00000000000000E-1

NonLinearIncrement       0   Yes  "SLE_63"
   LON1    1.00000000000000E+0
   LON2    1.00000000000000E+0
   LON3    1.00000000000000E+0
   LON9    1.00000000000000E+0
   LON8    8.00000000000000E-1

NonLinearIncrement       0   Yes  "SLE_64"
   LON1    1.00000000000000E+0
```

```
   LON2    1.00000000000000E+0
   LON4    1.00000000000000E+0
   LON9    1.00000000000000E+0
   LON8    8.00000000000000E-1

NonLinearIncrement       0   Yes  "SLE_65"
   LON1    1.00000000000000E+0
   LON2    1.00000000000000E+0
   LON3    1.00000000000000E+0
   LON7    1.00000000000000E+0
   LON10    8.00000000000000E-1

NonLinearIncrement       0   Yes  "SLE_66"
   LON1    1.00000000000000E+0
   LON2    1.00000000000000E+0
   LON4    1.00000000000000E+0
   LON7    1.00000000000000E+0
   LON10    8.00000000000000E-1

NonLinearIncrement       0   Yes  "SLE_67"
   LON1    1.00000000000000E+0
   LON2    1.00000000000000E+0
   LON3    1.00000000000000E+0
   LON9    1.00000000000000E+0
   LON10    8.00000000000000E-1

NonLinearIncrement       0   Yes  "SLE_68"
   LON1    1.00000000000000E+0
   LON2    1.00000000000000E+0
   LON4    1.00000000000000E+0
   LON9    1.00000000000000E+0
   LON10    8.00000000000000E-1

NonLinearIncrement       0   Yes  "SLE_69"
   LON1    1.00000000000000E+0
   LON2    1.00000000000000E+0
   LON3    1.00000000000000E+0
   LON7    1.00000000000000E+0
   LON11    6.00000000000000E-1

NonLinearIncrement       0   Yes  "SLE_70"
   LON1    1.00000000000000E+0
   LON2    1.00000000000000E+0
   LON4    1.00000000000000E+0
   LON7    1.00000000000000E+0
   LON11    6.00000000000000E-1

NonLinearIncrement       0   Yes  "SLE_71"
   LON1    1.00000000000000E+0
   LON2    1.00000000000000E+0
   LON3    1.00000000000000E+0
   LON9    1.00000000000000E+0
   LON11    6.00000000000000E-1
```

```
NonLinearIncrement       0   Yes  "SLE_72"
   LON1    1.00000000000000E+0
   LON2    1.00000000000000E+0
   LON4    1.00000000000000E+0
   LON9    1.00000000000000E+0
   LON11    6.00000000000000E-1

NonLinearIncrement       0   Yes  "SLE_73"
   LON1    1.00000000000000E+0
   LON2    1.00000000000000E+0
   LON3    1.00000000000000E+0
   LON7    1.00000000000000E+0
   LON12    6.00000000000000E-1

NonLinearIncrement       0   Yes  "SLE_74"
   LON1    1.00000000000000E+0
   LON2    1.00000000000000E+0
   LON4    1.00000000000000E+0
   LON7    1.00000000000000E+0
   LON12    6.00000000000000E-1

NonLinearIncrement       0   Yes  "SLE_75"
   LON1    1.00000000000000E+0
   LON2    1.00000000000000E+0
   LON3    1.00000000000000E+0
   LON9    1.00000000000000E+0
   LON12    6.00000000000000E-1

NonLinearIncrement       0   Yes  "SLE_76"
   LON1    1.00000000000000E+0
   LON2    1.00000000000000E+0
   LON4    1.00000000000000E+0
   LON9    1.00000000000000E+0
   LON12    6.00000000000000E-1

NonLinearIncrement       0   Yes  "SLE_77"
   LON1    1.00000000000000E+0
   LON2    1.00000000000000E+0
   LON3    1.00000000000000E+0
   LON6    7.00000000000000E-1
   LON7    1.00000000000000E+0
   LON8    8.00000000000000E-1

NonLinearIncrement       0   Yes  "SLE_78"
   LON1    1.00000000000000E+0
   LON2    1.00000000000000E+0
   LON4    1.00000000000000E+0
   LON6    7.00000000000000E-1
   LON7    1.00000000000000E+0
   LON8    8.00000000000000E-1

NonLinearIncrement       0   Yes  "SLE_79"
   LON1    1.00000000000000E+0
   LON2    1.00000000000000E+0
```

```
   LON3    1.00000000000000E+0
   LON6    7.00000000000000E-1
   LON9    1.00000000000000E+0
   LON8    8.00000000000000E-1

NonLinearIncrement       0   Yes  "SLE_80"
   LON1    1.00000000000000E+0
   LON2    1.00000000000000E+0
   LON4    1.00000000000000E+0
   LON6    7.00000000000000E-1
   LON9    1.00000000000000E+0
   LON8    8.00000000000000E-1

NonLinearIncrement       0   Yes  "SLE_81"
   LON1    1.00000000000000E+0
   LON2    1.00000000000000E+0
   LON3    1.00000000000000E+0
   LON6    7.00000000000000E-1
   LON7    1.00000000000000E+0
   LON10    8.00000000000000E-1

NonLinearIncrement       0   Yes  "SLE_82"
   LON1    1.00000000000000E+0
   LON2    1.00000000000000E+0
   LON4    1.00000000000000E+0
   LON6    7.00000000000000E-1
   LON7    1.00000000000000E+0
   LON10    8.00000000000000E-1

NonLinearIncrement       0   Yes  "SLE_83"
   LON1    1.00000000000000E+0
   LON2    1.00000000000000E+0
   LON3    1.00000000000000E+0
   LON6    7.00000000000000E-1
   LON9    1.00000000000000E+0
   LON10    8.00000000000000E-1

NonLinearIncrement       0   Yes  "SLE_84"
   LON1    1.00000000000000E+0
   LON2    1.00000000000000E+0
   LON4    1.00000000000000E+0
   LON6    7.00000000000000E-1
   LON9    1.00000000000000E+0
   LON10    8.00000000000000E-1

NonLinearIncrement       0   Yes  "SLE_85"
   LON1    1.00000000000000E+0
   LON2    1.00000000000000E+0
   LON3    1.00000000000000E+0
   LON6    7.00000000000000E-1
   LON7    1.00000000000000E+0
   LON11    6.00000000000000E-1

NonLinearIncrement       0   Yes  "SLE_86"
```

```
   LON1    1.00000000000000E+0
   LON2    1.00000000000000E+0
   LON4    1.00000000000000E+0
   LON6    7.00000000000000E-1
   LON7    1.00000000000000E+0
   LON11    6.00000000000000E-1

NonLinearIncrement       0   Yes  "SLE_87"
   LON1    1.00000000000000E+0
   LON2    1.00000000000000E+0
   LON3    1.00000000000000E+0
   LON6    7.00000000000000E-1
   LON9    1.00000000000000E+0
   LON11    6.00000000000000E-1

NonLinearIncrement       0   Yes  "SLE_88"
   LON1    1.00000000000000E+0
   LON2    1.00000000000000E+0
   LON4    1.00000000000000E+0
   LON6    7.00000000000000E-1
   LON9    1.00000000000000E+0
   LON11    6.00000000000000E-1

NonLinearIncrement       0   Yes  "SLE_89"
   LON1    1.00000000000000E+0
   LON2    1.00000000000000E+0
   LON3    1.00000000000000E+0
   LON6    7.00000000000000E-1
   LON7    1.00000000000000E+0
   LON12    6.00000000000000E-1

NonLinearIncrement       0   Yes  "SLE_90"
   LON1    1.00000000000000E+0
   LON2    1.00000000000000E+0
   LON4    1.00000000000000E+0
   LON6    7.00000000000000E-1
   LON7    1.00000000000000E+0
   LON12    6.00000000000000E-1

NonLinearIncrement       0   Yes  "SLE_91"
   LON1    1.00000000000000E+0
   LON2    1.00000000000000E+0
   LON3    1.00000000000000E+0
   LON6    7.00000000000000E-1
   LON9    1.00000000000000E+0
   LON12    6.00000000000000E-1

NonLinearIncrement       0   Yes  "SLE_92"
   LON1    1.00000000000000E+0
   LON2    1.00000000000000E+0
   LON4    1.00000000000000E+0
   LON6    7.00000000000000E-1
   LON9    1.00000000000000E+0
   LON12    6.00000000000000E-1
```

```
NonLinearIncrement       0   Yes  "SLE_93"
   LON1    1.00000000000000E+0
   LON2    1.00000000000000E+0
   LON3    1.00000000000000E+0
   LON7    1.00000000000000E+0
   LON8    8.00000000000000E-1
   LON11    6.00000000000000E-1

NonLinearIncrement       0   Yes  "SLE_94"
   LON1    1.00000000000000E+0
   LON2    1.00000000000000E+0
   LON4    1.00000000000000E+0
   LON7    1.00000000000000E+0
   LON8    8.00000000000000E-1
   LON11    6.00000000000000E-1

NonLinearIncrement       0   Yes  "SLE_95"
   LON1    1.00000000000000E+0
   LON2    1.00000000000000E+0
   LON3    1.00000000000000E+0
   LON9    1.00000000000000E+0
   LON8    8.00000000000000E-1
   LON11    6.00000000000000E-1

NonLinearIncrement       0   Yes  "SLE_96"
   LON1    1.00000000000000E+0
   LON2    1.00000000000000E+0
   LON4    1.00000000000000E+0
   LON9    1.00000000000000E+0
   LON8    8.00000000000000E-1
   LON11    6.00000000000000E-1

NonLinearIncrement       0   Yes  "SLE_97"
   LON1    1.00000000000000E+0
   LON2    1.00000000000000E+0
   LON3    1.00000000000000E+0
   LON7    1.00000000000000E+0
   LON8    8.00000000000000E-1
   LON12    6.00000000000000E-1

NonLinearIncrement       0   Yes  "SLE_98"
   LON1    1.00000000000000E+0
   LON2    1.00000000000000E+0
   LON4    1.00000000000000E+0
   LON7    1.00000000000000E+0
   LON8    8.00000000000000E-1
   LON12    6.00000000000000E-1

NonLinearIncrement       0   Yes  "SLE_99"
   LON1    1.00000000000000E+0
   LON2    1.00000000000000E+0
   LON3    1.00000000000000E+0
   LON9    1.00000000000000E+0
```

```
   LON8    8.00000000000000E-1
   LON12    6.00000000000000E-1

NonLinearIncrement       0   Yes  "SLE_100"
   LON1    1.00000000000000E+0
   LON2    1.00000000000000E+0
   LON4    1.00000000000000E+0
   LON9    1.00000000000000E+0
   LON8    8.00000000000000E-1
   LON12    6.00000000000000E-1

NonLinearIncrement       0   Yes  "SLE_101"
   LON1    1.00000000000000E+0
   LON2    1.00000000000000E+0
   LON3    1.00000000000000E+0
   LON7    1.00000000000000E+0
   LON10    8.00000000000000E-1
   LON11    6.00000000000000E-1

NonLinearIncrement       0   Yes  "SLE_102"
   LON1    1.00000000000000E+0
   LON2    1.00000000000000E+0
   LON4    1.00000000000000E+0
   LON7    1.00000000000000E+0
   LON10    8.00000000000000E-1
   LON11    6.00000000000000E-1

NonLinearIncrement       0   Yes  "SLE_103"
   LON1    1.00000000000000E+0
   LON2    1.00000000000000E+0
   LON3    1.00000000000000E+0
   LON9    1.00000000000000E+0
   LON10    8.00000000000000E-1
   LON11    6.00000000000000E-1

NonLinearIncrement       0   Yes  "SLE_104"
   LON1    1.00000000000000E+0
   LON2    1.00000000000000E+0
   LON4    1.00000000000000E+0
   LON9    1.00000000000000E+0
   LON10    8.00000000000000E-1
   LON11    6.00000000000000E-1

NonLinearIncrement       0   Yes  "SLE_105"
   LON1    1.00000000000000E+0
   LON2    1.00000000000000E+0
   LON3    1.00000000000000E+0
   LON7    1.00000000000000E+0
   LON10    8.00000000000000E-1
   LON12    6.00000000000000E-1

NonLinearIncrement       0   Yes  "SLE_106"
   LON1    1.00000000000000E+0
   LON2    1.00000000000000E+0
```

```
   LON4    1.00000000000000E+0
   LON7    1.00000000000000E+0
   LON10    8.00000000000000E-1
   LON12    6.00000000000000E-1

NonLinearIncrement       0   Yes  "SLE_107"
   LON1    1.00000000000000E+0
   LON2    1.00000000000000E+0
   LON3    1.00000000000000E+0
   LON9    1.00000000000000E+0
   LON10    8.00000000000000E-1
   LON12    6.00000000000000E-1

NonLinearIncrement       0   Yes  "SLE_108"
   LON1    1.00000000000000E+0
   LON2    1.00000000000000E+0
   LON4    1.00000000000000E+0
   LON9    1.00000000000000E+0
   LON10    8.00000000000000E-1
   LON12    6.00000000000000E-1

NonLinearIncrement       0   Yes  "SLE_109"
   LON1    1.00000000000000E+0
   LON2    1.00000000000000E+0
   LON3    1.00000000000000E+0
   LON6    7.00000000000000E-1
   LON7    1.00000000000000E+0
   LON8    8.00000000000000E-1
   LON11    6.00000000000000E-1

NonLinearIncrement       0   Yes  "SLE_110"
   LON1    1.00000000000000E+0
   LON2    1.00000000000000E+0
   LON4    1.00000000000000E+0
   LON6    7.00000000000000E-1
   LON7    1.00000000000000E+0
   LON8    8.00000000000000E-1
   LON11    6.00000000000000E-1

NonLinearIncrement       0   Yes  "SLE_111"
   LON1    1.00000000000000E+0
   LON2    1.00000000000000E+0
   LON3    1.00000000000000E+0
   LON6    7.00000000000000E-1
   LON9    1.00000000000000E+0
   LON8    8.00000000000000E-1
   LON11    6.00000000000000E-1

NonLinearIncrement       0   Yes  "SLE_112"
   LON1    1.00000000000000E+0
   LON2    1.00000000000000E+0
   LON4    1.00000000000000E+0
   LON6    7.00000000000000E-1
   LON9    1.00000000000000E+0
```

```
   LON8    8.00000000000000E-1
   LON11    6.00000000000000E-1

NonLinearIncrement       0   Yes  "SLE_113"
   LON1    1.00000000000000E+0
   LON2    1.00000000000000E+0
   LON3    1.00000000000000E+0
   LON6    7.00000000000000E-1
   LON7    1.00000000000000E+0
   LON8    8.00000000000000E-1
   LON12    6.00000000000000E-1

NonLinearIncrement       0   Yes  "SLE_114"
   LON1    1.00000000000000E+0
   LON2    1.00000000000000E+0
   LON4    1.00000000000000E+0
   LON6    7.00000000000000E-1
   LON7    1.00000000000000E+0
   LON8    8.00000000000000E-1
   LON12    6.00000000000000E-1

NonLinearIncrement       0   Yes  "SLE_115"
   LON1    1.00000000000000E+0
   LON2    1.00000000000000E+0
   LON3    1.00000000000000E+0
   LON6    7.00000000000000E-1
   LON9    1.00000000000000E+0
   LON8    8.00000000000000E-1
   LON12    6.00000000000000E-1

NonLinearIncrement       0   Yes  "SLE_116"
   LON1    1.00000000000000E+0
   LON2    1.00000000000000E+0
   LON4    1.00000000000000E+0
   LON6    7.00000000000000E-1
   LON9    1.00000000000000E+0
   LON8    8.00000000000000E-1
   LON12    6.00000000000000E-1

NonLinearIncrement       0   Yes  "SLE_117"
   LON1    1.00000000000000E+0
   LON2    1.00000000000000E+0
   LON3    1.00000000000000E+0
   LON6    7.00000000000000E-1
   LON7    1.00000000000000E+0
   LON10    8.00000000000000E-1
   LON11    6.00000000000000E-1

NonLinearIncrement       0   Yes  "SLE_118"
   LON1    1.00000000000000E+0
   LON2    1.00000000000000E+0
   LON4    1.00000000000000E+0
   LON6    7.00000000000000E-1
   LON7    1.00000000000000E+0
```

```
   LON10    8.00000000000000E-1
   LON11    6.00000000000000E-1

NonLinearIncrement       0   Yes  "SLE_119"
   LON1    1.00000000000000E+0
   LON2    1.00000000000000E+0
   LON3    1.00000000000000E+0
   LON6    7.00000000000000E-1
   LON9    1.00000000000000E+0
   LON10    8.00000000000000E-1
   LON11    6.00000000000000E-1

NonLinearIncrement       0   Yes  "SLE_120"
   LON1    1.00000000000000E+0
   LON2    1.00000000000000E+0
   LON4    1.00000000000000E+0
   LON6    7.00000000000000E-1
   LON9    1.00000000000000E+0
   LON10    8.00000000000000E-1
   LON11    6.00000000000000E-1

NonLinearIncrement       0   Yes  "SLE_121"
   LON1    1.00000000000000E+0
   LON2    1.00000000000000E+0
   LON3    1.00000000000000E+0
   LON6    7.00000000000000E-1
   LON7    1.00000000000000E+0
   LON10    8.00000000000000E-1
   LON12    6.00000000000000E-1

NonLinearIncrement       0   Yes  "SLE_122"
   LON1    1.00000000000000E+0
   LON2    1.00000000000000E+0
   LON4    1.00000000000000E+0
   LON6    7.00000000000000E-1
   LON7    1.00000000000000E+0
   LON10    8.00000000000000E-1
   LON12    6.00000000000000E-1

NonLinearIncrement       0   Yes  "SLE_123"
   LON1    1.00000000000000E+0
   LON2    1.00000000000000E+0
   LON3    1.00000000000000E+0
   LON6    7.00000000000000E-1
   LON9    1.00000000000000E+0
   LON10    8.00000000000000E-1
   LON12    6.00000000000000E-1

NonLinearIncrement       0   Yes  "SLE_124"
   LON1    1.00000000000000E+0
   LON2    1.00000000000000E+0
   LON4    1.00000000000000E+0
   LON6    7.00000000000000E-1
   LON9    1.00000000000000E+0
```

```
   LON10    8.00000000000000E-1
   LON12    6.00000000000000E-1

NonLinearIncrement       0   Yes  "SLE_125"
   LON1    1.00000000000000E+0
   LON2    1.00000000000000E+0
   LON3    1.00000000000000E+0
   LON6    7.00000000000000E-1
   LON8    1.00000000000000E+0

NonLinearIncrement       0   Yes  "SLE_126"
   LON1    1.00000000000000E+0
   LON2    1.00000000000000E+0
   LON4    1.00000000000000E+0
   LON6    7.00000000000000E-1
   LON8    1.00000000000000E+0

NonLinearIncrement       0   Yes  "SLE_127"
   LON1    1.00000000000000E+0
   LON2    1.00000000000000E+0
   LON3    1.00000000000000E+0
   LON6    7.00000000000000E-1
   LON10    1.00000000000000E+0

NonLinearIncrement       0   Yes  "SLE_128"
   LON1    1.00000000000000E+0
   LON2    1.00000000000000E+0
   LON4    1.00000000000000E+0
   LON6    7.00000000000000E-1
   LON10    1.00000000000000E+0

NonLinearIncrement       0   Yes  "SLE_129"
   LON1    1.00000000000000E+0
   LON2    1.00000000000000E+0
   LON3    1.00000000000000E+0
   LON7    6.00000000000000E-1
   LON8    1.00000000000000E+0

NonLinearIncrement       0   Yes  "SLE_130"
   LON1    1.00000000000000E+0
   LON2    1.00000000000000E+0
   LON4    1.00000000000000E+0
   LON7    6.00000000000000E-1
   LON8    1.00000000000000E+0

NonLinearIncrement       0   Yes  "SLE_131"
   LON1    1.00000000000000E+0
   LON2    1.00000000000000E+0
   LON3    1.00000000000000E+0
   LON9    6.00000000000000E-1
   LON8    1.00000000000000E+0

NonLinearIncrement       0   Yes  "SLE_132"
   LON1    1.00000000000000E+0
```

```
   LON2    1.00000000000000E+0
   LON4    1.00000000000000E+0
   LON9    6.00000000000000E-1
   LON8    1.00000000000000E+0

NonLinearIncrement       0   Yes  "SLE_133"
   LON1    1.00000000000000E+0
   LON2    1.00000000000000E+0
   LON3    1.00000000000000E+0
   LON7    6.00000000000000E-1
   LON10    1.00000000000000E+0

NonLinearIncrement       0   Yes  "SLE_134"
   LON1    1.00000000000000E+0
   LON2    1.00000000000000E+0
   LON4    1.00000000000000E+0
   LON7    6.00000000000000E-1
   LON10    1.00000000000000E+0

NonLinearIncrement       0   Yes  "SLE_135"
   LON1    1.00000000000000E+0
   LON2    1.00000000000000E+0
   LON3    1.00000000000000E+0
   LON9    6.00000000000000E-1
   LON10    1.00000000000000E+0

NonLinearIncrement       0   Yes  "SLE_136"
   LON1    1.00000000000000E+0
   LON2    1.00000000000000E+0
   LON4    1.00000000000000E+0
   LON9    6.00000000000000E-1
   LON10    1.00000000000000E+0

NonLinearIncrement       0   Yes  "SLE_137"
   LON1    1.00000000000000E+0
   LON2    1.00000000000000E+0
   LON3    1.00000000000000E+0
   LON8    1.00000000000000E+0
   LON11    6.00000000000000E-1

NonLinearIncrement       0   Yes  "SLE_138"
   LON1    1.00000000000000E+0
   LON2    1.00000000000000E+0
   LON4    1.00000000000000E+0
   LON8    1.00000000000000E+0
   LON11    6.00000000000000E-1

NonLinearIncrement       0   Yes  "SLE_139"
   LON1    1.00000000000000E+0
   LON2    1.00000000000000E+0
   LON3    1.00000000000000E+0
   LON8    1.00000000000000E+0
   LON11    6.00000000000000E-1
```

```
NonLinearIncrement       0   Yes  "SLE_140"
   LON1    1.00000000000000E+0
   LON2    1.00000000000000E+0
   LON4    1.00000000000000E+0
   LON8    1.00000000000000E+0
   LON11    6.00000000000000E-1

NonLinearIncrement       0   Yes  "SLE_141"
   LON1    1.00000000000000E+0
   LON2    1.00000000000000E+0
   LON3    1.00000000000000E+0
   LON10    1.00000000000000E+0
   LON12    6.00000000000000E-1

NonLinearIncrement       0   Yes  "SLE_142"
   LON1    1.00000000000000E+0
   LON2    1.00000000000000E+0
   LON4    1.00000000000000E+0
   LON10    1.00000000000000E+0
   LON12    6.00000000000000E-1

NonLinearIncrement       0   Yes  "SLE_143"
   LON1    1.00000000000000E+0
   LON2    1.00000000000000E+0
   LON3    1.00000000000000E+0
   LON10    1.00000000000000E+0
   LON12    6.00000000000000E-1

NonLinearIncrement       0   Yes  "SLE_144"
   LON1    1.00000000000000E+0
   LON2    1.00000000000000E+0
   LON4    1.00000000000000E+0
   LON10    1.00000000000000E+0
   LON12    6.00000000000000E-1

NonLinearIncrement       0   Yes  "SLE_145"
   LON1    1.00000000000000E+0
   LON2    1.00000000000000E+0
   LON3    1.00000000000000E+0
   LON6    7.00000000000000E-1
   LON7    6.00000000000000E-1
   LON8    1.00000000000000E+0

NonLinearIncrement       0   Yes  "SLE_146"
   LON1    1.00000000000000E+0
   LON2    1.00000000000000E+0
   LON4    1.00000000000000E+0
   LON6    7.00000000000000E-1
   LON7    6.00000000000000E-1
   LON8    1.00000000000000E+0

NonLinearIncrement       0   Yes  "SLE_147"
   LON1    1.00000000000000E+0
   LON2    1.00000000000000E+0
```

```
   LON3    1.00000000000000E+0
   LON6    7.00000000000000E-1
   LON9    6.00000000000000E-1
   LON8    1.00000000000000E+0

NonLinearIncrement       0   Yes  "SLE_148"
   LON1    1.00000000000000E+0
   LON2    1.00000000000000E+0
   LON4    1.00000000000000E+0
   LON6    7.00000000000000E-1
   LON9    6.00000000000000E-1
   LON8    1.00000000000000E+0

NonLinearIncrement       0   Yes  "SLE_149"
   LON1    1.00000000000000E+0
   LON2    1.00000000000000E+0
   LON3    1.00000000000000E+0
   LON6    7.00000000000000E-1
   LON7    6.00000000000000E-1
   LON10    1.00000000000000E+0

NonLinearIncrement       0   Yes  "SLE_150"
   LON1    1.00000000000000E+0
   LON2    1.00000000000000E+0
   LON4    1.00000000000000E+0
   LON6    7.00000000000000E-1
   LON7    6.00000000000000E-1
   LON10    1.00000000000000E+0

NonLinearIncrement       0   Yes  "SLE_151"
   LON1    1.00000000000000E+0
   LON2    1.00000000000000E+0
   LON3    1.00000000000000E+0
   LON6    7.00000000000000E-1
   LON9    6.00000000000000E-1
   LON10    1.00000000000000E+0

NonLinearIncrement       0   Yes  "SLE_152"
   LON1    1.00000000000000E+0
   LON2    1.00000000000000E+0
   LON4    1.00000000000000E+0
   LON6    7.00000000000000E-1
   LON9    6.00000000000000E-1
   LON10    1.00000000000000E+0

NonLinearIncrement       0   Yes  "SLE_153"
   LON1    1.00000000000000E+0
   LON2    1.00000000000000E+0
   LON3    1.00000000000000E+0
   LON6    7.00000000000000E-1
   LON8    1.00000000000000E+0
   LON11    6.00000000000000E-1

NonLinearIncrement       0   Yes  "SLE_154"
```

```
   LON1    1.00000000000000E+0
   LON2    1.00000000000000E+0
   LON4    1.00000000000000E+0
   LON6    7.00000000000000E-1
   LON8    1.00000000000000E+0
   LON11    6.00000000000000E-1

NonLinearIncrement       0   Yes  "SLE_155"
   LON1    1.00000000000000E+0
   LON2    1.00000000000000E+0
   LON3    1.00000000000000E+0
   LON6    7.00000000000000E-1
   LON8    1.00000000000000E+0
   LON11    6.00000000000000E-1

NonLinearIncrement       0   Yes  "SLE_156"
   LON1    1.00000000000000E+0
   LON2    1.00000000000000E+0
   LON4    1.00000000000000E+0
   LON6    7.00000000000000E-1
   LON8    1.00000000000000E+0
   LON11    6.00000000000000E-1

NonLinearIncrement       0   Yes  "SLE_157"
   LON1    1.00000000000000E+0
   LON2    1.00000000000000E+0
   LON3    1.00000000000000E+0
   LON6    7.00000000000000E-1
   LON10    1.00000000000000E+0
   LON12    6.00000000000000E-1

NonLinearIncrement       0   Yes  "SLE_158"
   LON1    1.00000000000000E+0
   LON2    1.00000000000000E+0
   LON4    1.00000000000000E+0
   LON6    7.00000000000000E-1
   LON10    1.00000000000000E+0
   LON12    6.00000000000000E-1

NonLinearIncrement       0   Yes  "SLE_159"
   LON1    1.00000000000000E+0
   LON2    1.00000000000000E+0
   LON3    1.00000000000000E+0
   LON6    7.00000000000000E-1
   LON10    1.00000000000000E+0
   LON12    6.00000000000000E-1

NonLinearIncrement       0   Yes  "SLE_160"
   LON1    1.00000000000000E+0
   LON2    1.00000000000000E+0
   LON4    1.00000000000000E+0
   LON6    7.00000000000000E-1
   LON10    1.00000000000000E+0
   LON12    6.00000000000000E-1
```

```
NonLinearIncrement       0   Yes  "SLE_161"
   LON1    1.00000000000000E+0
   LON2    1.00000000000000E+0
   LON3    1.00000000000000E+0
   LON7    6.00000000000000E-1
   LON8    1.00000000000000E+0
   LON11    6.00000000000000E-1

NonLinearIncrement       0   Yes  "SLE_162"
   LON1    1.00000000000000E+0
   LON2    1.00000000000000E+0
   LON4    1.00000000000000E+0
   LON7    6.00000000000000E-1
   LON8    1.00000000000000E+0
   LON11    6.00000000000000E-1

NonLinearIncrement       0   Yes  "SLE_163"
   LON1    1.00000000000000E+0
   LON2    1.00000000000000E+0
   LON3    1.00000000000000E+0
   LON9    6.00000000000000E-1
   LON8    1.00000000000000E+0
   LON11    6.00000000000000E-1

NonLinearIncrement       0   Yes  "SLE_164"
   LON1    1.00000000000000E+0
   LON2    1.00000000000000E+0
   LON4    1.00000000000000E+0
   LON9    6.00000000000000E-1
   LON8    1.00000000000000E+0
   LON11    6.00000000000000E-1

NonLinearIncrement       0   Yes  "SLE_165"
   LON1    1.00000000000000E+0
   LON2    1.00000000000000E+0
   LON3    1.00000000000000E+0
   LON7    6.00000000000000E-1
   LON8    1.00000000000000E+0
   LON12    6.00000000000000E-1

NonLinearIncrement       0   Yes  "SLE_166"
   LON1    1.00000000000000E+0
   LON2    1.00000000000000E+0
   LON4    1.00000000000000E+0
   LON7    6.00000000000000E-1
   LON8    1.00000000000000E+0
   LON12    6.00000000000000E-1

NonLinearIncrement       0   Yes  "SLE_167"
   LON1    1.00000000000000E+0
   LON2    1.00000000000000E+0
   LON3    1.00000000000000E+0
   LON9    6.00000000000000E-1
```

```
   LON8    1.00000000000000E+0
   LON12    6.00000000000000E-1

NonLinearIncrement       0   Yes  "SLE_168"
   LON1    1.00000000000000E+0
   LON2    1.00000000000000E+0
   LON4    1.00000000000000E+0
   LON9    6.00000000000000E-1
   LON8    1.00000000000000E+0
   LON12    6.00000000000000E-1

NonLinearIncrement       0   Yes  "SLE_169"
   LON1    1.00000000000000E+0
   LON2    1.00000000000000E+0
   LON3    1.00000000000000E+0
   LON7    6.00000000000000E-1
   LON10    1.00000000000000E+0
   LON11    6.00000000000000E-1

NonLinearIncrement       0   Yes  "SLE_170"
   LON1    1.00000000000000E+0
   LON2    1.00000000000000E+0
   LON4    1.00000000000000E+0
   LON7    6.00000000000000E-1
   LON10    1.00000000000000E+0
   LON11    6.00000000000000E-1

NonLinearIncrement       0   Yes  "SLE_171"
   LON1    1.00000000000000E+0
   LON2    1.00000000000000E+0
   LON3    1.00000000000000E+0
   LON9    6.00000000000000E-1
   LON10    1.00000000000000E+0
   LON11    6.00000000000000E-1

NonLinearIncrement       0   Yes  "SLE_172"
   LON1    1.00000000000000E+0
   LON2    1.00000000000000E+0
   LON4    1.00000000000000E+0
   LON9    6.00000000000000E-1
   LON10    1.00000000000000E+0
   LON11    6.00000000000000E-1

NonLinearIncrement       0   Yes  "SLE_173"
   LON1    1.00000000000000E+0
   LON2    1.00000000000000E+0
   LON3    1.00000000000000E+0
   LON7    6.00000000000000E-1
   LON10    1.00000000000000E+0
   LON12    6.00000000000000E-1

NonLinearIncrement       0   Yes  "SLE_174"
   LON1    1.00000000000000E+0
   LON2    1.00000000000000E+0
```

```
   LON4    1.00000000000000E+0
   LON7    6.00000000000000E-1
   LON10    1.00000000000000E+0
   LON12    6.00000000000000E-1

NonLinearIncrement       0   Yes  "SLE_175"
   LON1    1.00000000000000E+0
   LON2    1.00000000000000E+0
   LON3    1.00000000000000E+0
   LON9    6.00000000000000E-1
   LON10    1.00000000000000E+0
   LON12    6.00000000000000E-1

NonLinearIncrement       0   Yes  "SLE_176"
   LON1    1.00000000000000E+0
   LON2    1.00000000000000E+0
   LON4    1.00000000000000E+0
   LON9    6.00000000000000E-1
   LON10    1.00000000000000E+0
   LON12    6.00000000000000E-1

NonLinearIncrement       0   Yes  "SLE_177"
   LON1    1.00000000000000E+0
   LON2    1.00000000000000E+0
   LON3    1.00000000000000E+0
   LON6    7.00000000000000E-1
   LON7    6.00000000000000E-1
   LON8    1.00000000000000E+0
   LON11    6.00000000000000E-1

NonLinearIncrement       0   Yes  "SLE_178"
   LON1    1.00000000000000E+0
   LON2    1.00000000000000E+0
   LON4    1.00000000000000E+0
   LON6    7.00000000000000E-1
   LON7    6.00000000000000E-1
   LON8    1.00000000000000E+0
   LON11    6.00000000000000E-1

NonLinearIncrement       0   Yes  "SLE_179"
   LON1    1.00000000000000E+0
   LON2    1.00000000000000E+0
   LON3    1.00000000000000E+0
   LON6    7.00000000000000E-1
   LON9    6.00000000000000E-1
   LON8    1.00000000000000E+0
   LON11    6.00000000000000E-1

NonLinearIncrement       0   Yes  "SLE_180"
   LON1    1.00000000000000E+0
   LON2    1.00000000000000E+0
   LON4    1.00000000000000E+0
   LON6    7.00000000000000E-1
   LON9    6.00000000000000E-1
```

```
   LON8    1.00000000000000E+0
   LON11    6.00000000000000E-1

NonLinearIncrement       0   Yes  "SLE_181"
   LON1    1.00000000000000E+0
   LON2    1.00000000000000E+0
   LON3    1.00000000000000E+0
   LON6    7.00000000000000E-1
   LON7    6.00000000000000E-1
   LON8    1.00000000000000E+0
   LON12    6.00000000000000E-1

NonLinearIncrement       0   Yes  "SLE_182"
   LON1    1.00000000000000E+0
   LON2    1.00000000000000E+0
   LON4    1.00000000000000E+0
   LON6    7.00000000000000E-1
   LON7    6.00000000000000E-1
   LON8    1.00000000000000E+0
   LON12    6.00000000000000E-1

NonLinearIncrement       0   Yes  "SLE_183"
   LON1    1.00000000000000E+0
   LON2    1.00000000000000E+0
   LON3    1.00000000000000E+0
   LON6    7.00000000000000E-1
   LON9    6.00000000000000E-1
   LON8    1.00000000000000E+0
   LON12    6.00000000000000E-1

NonLinearIncrement       0   Yes  "SLE_184"
   LON1    1.00000000000000E+0
   LON2    1.00000000000000E+0
   LON4    1.00000000000000E+0
   LON6    7.00000000000000E-1
   LON9    6.00000000000000E-1
   LON8    1.00000000000000E+0
   LON12    6.00000000000000E-1

NonLinearIncrement       0   Yes  "SLE_185"
   LON1    1.00000000000000E+0
   LON2    1.00000000000000E+0
   LON3    1.00000000000000E+0
   LON6    7.00000000000000E-1
   LON7    6.00000000000000E-1
   LON10    1.00000000000000E+0
   LON11    6.00000000000000E-1

NonLinearIncrement       0   Yes  "SLE_186"
   LON1    1.00000000000000E+0
   LON2    1.00000000000000E+0
   LON4    1.00000000000000E+0
   LON6    7.00000000000000E-1
   LON7    6.00000000000000E-1
```

```
   LON10    1.00000000000000E+0
   LON11    6.00000000000000E-1

NonLinearIncrement       0   Yes  "SLE_187"
   LON1    1.00000000000000E+0
   LON2    1.00000000000000E+0
   LON3    1.00000000000000E+0
   LON6    7.00000000000000E-1
   LON9    6.00000000000000E-1
   LON10    1.00000000000000E+0
   LON11    6.00000000000000E-1

NonLinearIncrement       0   Yes  "SLE_188"
   LON1    1.00000000000000E+0
   LON2    1.00000000000000E+0
   LON4    1.00000000000000E+0
   LON6    7.00000000000000E-1
   LON9    6.00000000000000E-1
   LON10    1.00000000000000E+0
   LON11    6.00000000000000E-1

NonLinearIncrement       0   Yes  "SLE_189"
   LON1    1.00000000000000E+0
   LON2    1.00000000000000E+0
   LON3    1.00000000000000E+0
   LON6    7.00000000000000E-1
   LON7    6.00000000000000E-1
   LON10    1.00000000000000E+0
   LON12    6.00000000000000E-1

NonLinearIncrement       0   Yes  "SLE_190"
   LON1    1.00000000000000E+0
   LON2    1.00000000000000E+0
   LON4    1.00000000000000E+0
   LON6    7.00000000000000E-1
   LON7    6.00000000000000E-1
   LON10    1.00000000000000E+0
   LON12    6.00000000000000E-1

NonLinearIncrement       0   Yes  "SLE_191"
   LON1    1.00000000000000E+0
   LON2    1.00000000000000E+0
   LON3    1.00000000000000E+0
   LON6    7.00000000000000E-1
   LON9    6.00000000000000E-1
   LON10    1.00000000000000E+0
   LON12    6.00000000000000E-1

NonLinearIncrement       0   Yes  "SLE_192"
   LON1    1.00000000000000E+0
   LON2    1.00000000000000E+0
   LON4    1.00000000000000E+0
   LON6    7.00000000000000E-1
   LON9    6.00000000000000E-1
```

```
   LON10    1.00000000000000E+0
   LON12    6.00000000000000E-1

NonLinearIncrement       0   Yes  "SLE_193"
   LON1    1.00000000000000E+0
   LON2    1.00000000000000E+0
   LON3    1.00000000000000E+0
   LON6    7.00000000000000E-1
   LON11    1.00000000000000E+0

NonLinearIncrement       0   Yes  "SLE_194"
   LON1    1.00000000000000E+0
   LON2    1.00000000000000E+0
   LON4    1.00000000000000E+0
   LON6    7.00000000000000E-1
   LON11    1.00000000000000E+0

NonLinearIncrement       0   Yes  "SLE_195"
   LON1    1.00000000000000E+0
   LON2    1.00000000000000E+0
   LON3    1.00000000000000E+0
   LON6    7.00000000000000E-1
   LON12    1.00000000000000E+0

NonLinearIncrement       0   Yes  "SLE_196"
   LON1    1.00000000000000E+0
   LON2    1.00000000000000E+0
   LON4    1.00000000000000E+0
   LON6    7.00000000000000E-1
   LON12    1.00000000000000E+0

NonLinearIncrement       0   Yes  "SLE_197"
   LON1    1.00000000000000E+0
   LON2    1.00000000000000E+0
   LON3    1.00000000000000E+0
   LON7    6.00000000000000E-1
   LON11    1.00000000000000E+0

NonLinearIncrement       0   Yes  "SLE_198"
   LON1    1.00000000000000E+0
   LON2    1.00000000000000E+0
   LON4    1.00000000000000E+0
   LON7    6.00000000000000E-1
   LON11    1.00000000000000E+0

NonLinearIncrement       0   Yes  "SLE_199"
   LON1    1.00000000000000E+0
   LON2    1.00000000000000E+0
   LON3    1.00000000000000E+0
   LON9    6.00000000000000E-1
   LON11    1.00000000000000E+0

NonLinearIncrement       0   Yes  "SLE_200"
   LON1    1.00000000000000E+0
```

```
   LON2    1.00000000000000E+0
   LON4    1.00000000000000E+0
   LON9    6.00000000000000E-1
   LON11    1.00000000000000E+0

NonLinearIncrement       0   Yes  "SLE_201"
   LON1    1.00000000000000E+0
   LON2    1.00000000000000E+0
   LON3    1.00000000000000E+0
   LON7    6.00000000000000E-1
   LON12    1.00000000000000E+0

NonLinearIncrement       0   Yes  "SLE_202"
   LON1    1.00000000000000E+0
   LON2    1.00000000000000E+0
   LON4    1.00000000000000E+0
   LON7    6.00000000000000E-1
   LON12    1.00000000000000E+0

NonLinearIncrement       0   Yes  "SLE_203"
   LON1    1.00000000000000E+0
   LON2    1.00000000000000E+0
   LON3    1.00000000000000E+0
   LON9    6.00000000000000E-1
   LON12    1.00000000000000E+0

NonLinearIncrement       0   Yes  "SLE_204"
   LON1    1.00000000000000E+0
   LON2    1.00000000000000E+0
   LON4    1.00000000000000E+0
   LON9    6.00000000000000E-1
   LON12    1.00000000000000E+0

NonLinearIncrement       0   Yes  "SLE_205"
   LON1    1.00000000000000E+0
   LON2    1.00000000000000E+0
   LON3    1.00000000000000E+0
   LON8    8.00000000000000E-1
   LON11    1.00000000000000E+0

NonLinearIncrement       0   Yes  "SLE_206"
   LON1    1.00000000000000E+0
   LON2    1.00000000000000E+0
   LON4    1.00000000000000E+0
   LON8    8.00000000000000E-1
   LON11    1.00000000000000E+0

NonLinearIncrement       0   Yes  "SLE_207"
   LON1    1.00000000000000E+0
   LON2    1.00000000000000E+0
   LON3    1.00000000000000E+0
   LON8    8.00000000000000E-1
   LON11    1.00000000000000E+0
```

```
NonLinearIncrement       0   Yes  "SLE_208"
   LON1    1.00000000000000E+0
   LON2    1.00000000000000E+0
   LON4    1.00000000000000E+0
   LON8    8.00000000000000E-1
   LON11    1.00000000000000E+0

NonLinearIncrement       0   Yes  "SLE_209"
   LON1    1.00000000000000E+0
   LON2    1.00000000000000E+0
   LON3    1.00000000000000E+0
   LON10    8.00000000000000E-1
   LON12    1.00000000000000E+0

NonLinearIncrement       0   Yes  "SLE_210"
   LON1    1.00000000000000E+0
   LON2    1.00000000000000E+0
   LON4    1.00000000000000E+0
   LON10    8.00000000000000E-1
   LON12    1.00000000000000E+0

NonLinearIncrement       0   Yes  "SLE_211"
   LON1    1.00000000000000E+0
   LON2    1.00000000000000E+0
   LON3    1.00000000000000E+0
   LON10    8.00000000000000E-1
   LON12    1.00000000000000E+0

NonLinearIncrement       0   Yes  "SLE_212"
   LON1    1.00000000000000E+0
   LON2    1.00000000000000E+0
   LON4    1.00000000000000E+0
   LON10    8.00000000000000E-1
   LON12    1.00000000000000E+0

NonLinearIncrement       0   Yes  "SLE_213"
   LON1    1.00000000000000E+0
   LON2    1.00000000000000E+0
   LON3    1.00000000000000E+0
   LON6    7.00000000000000E-1
   LON7    6.00000000000000E-1
   LON11    1.00000000000000E+0

NonLinearIncrement       0   Yes  "SLE_214"
   LON1    1.00000000000000E+0
   LON2    1.00000000000000E+0
   LON4    1.00000000000000E+0
   LON6    7.00000000000000E-1
   LON7    6.00000000000000E-1
   LON11    1.00000000000000E+0

NonLinearIncrement       0   Yes  "SLE_215"
   LON1    1.00000000000000E+0
   LON2    1.00000000000000E+0
```

```
   LON3    1.00000000000000E+0
   LON6    7.00000000000000E-1
   LON9    6.00000000000000E-1
   LON11    1.00000000000000E+0

NonLinearIncrement       0   Yes  "SLE_216"
   LON1    1.00000000000000E+0
   LON2    1.00000000000000E+0
   LON4    1.00000000000000E+0
   LON6    7.00000000000000E-1
   LON9    6.00000000000000E-1
   LON11    1.00000000000000E+0

NonLinearIncrement       0   Yes  "SLE_217"
   LON1    1.00000000000000E+0
   LON2    1.00000000000000E+0
   LON3    1.00000000000000E+0
   LON6    7.00000000000000E-1
   LON7    6.00000000000000E-1
   LON12    1.00000000000000E+0

NonLinearIncrement       0   Yes  "SLE_218"
   LON1    1.00000000000000E+0
   LON2    1.00000000000000E+0
   LON4    1.00000000000000E+0
   LON6    7.00000000000000E-1
   LON7    6.00000000000000E-1
   LON12    1.00000000000000E+0

NonLinearIncrement       0   Yes  "SLE_219"
   LON1    1.00000000000000E+0
   LON2    1.00000000000000E+0
   LON3    1.00000000000000E+0
   LON6    7.00000000000000E-1
   LON9    6.00000000000000E-1
   LON12    1.00000000000000E+0

NonLinearIncrement       0   Yes  "SLE_220"
   LON1    1.00000000000000E+0
   LON2    1.00000000000000E+0
   LON4    1.00000000000000E+0
   LON6    7.00000000000000E-1
   LON9    6.00000000000000E-1
   LON12    1.00000000000000E+0

NonLinearIncrement       0   Yes  "SLE_221"
   LON1    1.00000000000000E+0
   LON2    1.00000000000000E+0
   LON3    1.00000000000000E+0
   LON6    7.00000000000000E-1
   LON8    8.00000000000000E-1
   LON11    1.00000000000000E+0

NonLinearIncrement       0   Yes  "SLE_222"
```

```
   LON1    1.00000000000000E+0
   LON2    1.00000000000000E+0
   LON4    1.00000000000000E+0
   LON6    7.00000000000000E-1
   LON8    8.00000000000000E-1
   LON11    1.00000000000000E+0

NonLinearIncrement       0   Yes  "SLE_223"
   LON1    1.00000000000000E+0
   LON2    1.00000000000000E+0
   LON3    1.00000000000000E+0
   LON6    7.00000000000000E-1
   LON8    8.00000000000000E-1
   LON11    1.00000000000000E+0

NonLinearIncrement       0   Yes  "SLE_224"
   LON1    1.00000000000000E+0
   LON2    1.00000000000000E+0
   LON4    1.00000000000000E+0
   LON6    7.00000000000000E-1
   LON8    8.00000000000000E-1
   LON11    1.00000000000000E+0

NonLinearIncrement       0   Yes  "SLE_225"
   LON1    1.00000000000000E+0
   LON2    1.00000000000000E+0
   LON3    1.00000000000000E+0
   LON6    7.00000000000000E-1
   LON10    8.00000000000000E-1
   LON12    1.00000000000000E+0

NonLinearIncrement       0   Yes  "SLE_226"
   LON1    1.00000000000000E+0
   LON2    1.00000000000000E+0
   LON4    1.00000000000000E+0
   LON6    7.00000000000000E-1
   LON10    8.00000000000000E-1
   LON12    1.00000000000000E+0

NonLinearIncrement       0   Yes  "SLE_227"
   LON1    1.00000000000000E+0
   LON2    1.00000000000000E+0
   LON3    1.00000000000000E+0
   LON6    7.00000000000000E-1
   LON10    8.00000000000000E-1
   LON12    1.00000000000000E+0

NonLinearIncrement       0   Yes  "SLE_228"
   LON1    1.00000000000000E+0
   LON2    1.00000000000000E+0
   LON4    1.00000000000000E+0
   LON6    7.00000000000000E-1
   LON10    8.00000000000000E-1
   LON12    1.00000000000000E+0
```

```
NonLinearIncrement       0   Yes  "SLE_229"
   LON1    1.00000000000000E+0
   LON2    1.00000000000000E+0
   LON3    1.00000000000000E+0
   LON7    6.00000000000000E-1
   LON8    8.00000000000000E-1
   LON11    1.00000000000000E+0

NonLinearIncrement       0   Yes  "SLE_230"
   LON1    1.00000000000000E+0
   LON2    1.00000000000000E+0
   LON4    1.00000000000000E+0
   LON7    6.00000000000000E-1
   LON8    8.00000000000000E-1
   LON11    1.00000000000000E+0

NonLinearIncrement       0   Yes  "SLE_231"
   LON1    1.00000000000000E+0
   LON2    1.00000000000000E+0
   LON3    1.00000000000000E+0
   LON9    6.00000000000000E-1
   LON8    8.00000000000000E-1
   LON11    1.00000000000000E+0

NonLinearIncrement       0   Yes  "SLE_232"
   LON1    1.00000000000000E+0
   LON2    1.00000000000000E+0
   LON4    1.00000000000000E+0
   LON9    6.00000000000000E-1
   LON8    8.00000000000000E-1
   LON11    1.00000000000000E+0

NonLinearIncrement       0   Yes  "SLE_233"
   LON1    1.00000000000000E+0
   LON2    1.00000000000000E+0
   LON3    1.00000000000000E+0
   LON7    6.00000000000000E-1
   LON8    8.00000000000000E-1
   LON12    1.00000000000000E+0

NonLinearIncrement       0   Yes  "SLE_234"
   LON1    1.00000000000000E+0
   LON2    1.00000000000000E+0
   LON4    1.00000000000000E+0
   LON7    6.00000000000000E-1
   LON8    8.00000000000000E-1
   LON12    1.00000000000000E+0

NonLinearIncrement       0   Yes  "SLE_235"
   LON1    1.00000000000000E+0
   LON2    1.00000000000000E+0
   LON3    1.00000000000000E+0
   LON9    6.00000000000000E-1
```

```
   LON8    8.00000000000000E-1
   LON12    1.00000000000000E+0

NonLinearIncrement       0   Yes  "SLE_236"
   LON1    1.00000000000000E+0
   LON2    1.00000000000000E+0
   LON4    1.00000000000000E+0
   LON9    6.00000000000000E-1
   LON8    8.00000000000000E-1
   LON12    1.00000000000000E+0

NonLinearIncrement       0   Yes  "SLE_237"
   LON1    1.00000000000000E+0
   LON2    1.00000000000000E+0
   LON3    1.00000000000000E+0
   LON7    6.00000000000000E-1
   LON10    8.00000000000000E-1
   LON11    1.00000000000000E+0

NonLinearIncrement       0   Yes  "SLE_238"
   LON1    1.00000000000000E+0
   LON2    1.00000000000000E+0
   LON4    1.00000000000000E+0
   LON7    6.00000000000000E-1
   LON10    8.00000000000000E-1
   LON11    1.00000000000000E+0

NonLinearIncrement       0   Yes  "SLE_239"
   LON1    1.00000000000000E+0
   LON2    1.00000000000000E+0
   LON3    1.00000000000000E+0
   LON9    6.00000000000000E-1
   LON10    8.00000000000000E-1
   LON11    1.00000000000000E+0

NonLinearIncrement       0   Yes  "SLE_240"
   LON1    1.00000000000000E+0
   LON2    1.00000000000000E+0
   LON4    1.00000000000000E+0
   LON9    6.00000000000000E-1
   LON10    8.00000000000000E-1
   LON11    1.00000000000000E+0

NonLinearIncrement       0   Yes  "SLE_241"
   LON1    1.00000000000000E+0
   LON2    1.00000000000000E+0
   LON3    1.00000000000000E+0
   LON7    6.00000000000000E-1
   LON10    8.00000000000000E-1
   LON12    1.00000000000000E+0

NonLinearIncrement       0   Yes  "SLE_242"
   LON1    1.00000000000000E+0
   LON2    1.00000000000000E+0
```

```
   LON4    1.00000000000000E+0
   LON7    6.00000000000000E-1
   LON10    8.00000000000000E-1
   LON12    1.00000000000000E+0

NonLinearIncrement       0   Yes  "SLE_243"
   LON1    1.00000000000000E+0
   LON2    1.00000000000000E+0
   LON3    1.00000000000000E+0
   LON9    6.00000000000000E-1
   LON10    8.00000000000000E-1
   LON12    1.00000000000000E+0

NonLinearIncrement       0   Yes  "SLE_244"
   LON1    1.00000000000000E+0
   LON2    1.00000000000000E+0
   LON4    1.00000000000000E+0
   LON9    6.00000000000000E-1
   LON10    8.00000000000000E-1
   LON12    1.00000000000000E+0

NonLinearIncrement       0   Yes  "SLE_245"
   LON1    1.00000000000000E+0
   LON2    1.00000000000000E+0
   LON3    1.00000000000000E+0
   LON6    7.00000000000000E-1
   LON7    6.00000000000000E-1
   LON8    8.00000000000000E-1
   LON11    1.00000000000000E+0

NonLinearIncrement       0   Yes  "SLE_246"
   LON1    1.00000000000000E+0
   LON2    1.00000000000000E+0
   LON4    1.00000000000000E+0
   LON6    7.00000000000000E-1
   LON7    6.00000000000000E-1
   LON8    8.00000000000000E-1
   LON11    1.00000000000000E+0

NonLinearIncrement       0   Yes  "SLE_247"
   LON1    1.00000000000000E+0
   LON2    1.00000000000000E+0
   LON3    1.00000000000000E+0
   LON6    7.00000000000000E-1
   LON9    6.00000000000000E-1
   LON8    8.00000000000000E-1
   LON11    1.00000000000000E+0

NonLinearIncrement       0   Yes  "SLE_248"
   LON1    1.00000000000000E+0
   LON2    1.00000000000000E+0
   LON4    1.00000000000000E+0
   LON6    7.00000000000000E-1
   LON9    6.00000000000000E-1
```

```
   LON8    8.00000000000000E-1
   LON11    1.00000000000000E+0

NonLinearIncrement       0   Yes  "SLE_249"
   LON1    1.00000000000000E+0
   LON2    1.00000000000000E+0
   LON3    1.00000000000000E+0
   LON6    7.00000000000000E-1
   LON7    6.00000000000000E-1
   LON8    8.00000000000000E-1
   LON12    1.00000000000000E+0

NonLinearIncrement       0   Yes  "SLE_250"
   LON1    1.00000000000000E+0
   LON2    1.00000000000000E+0
   LON4    1.00000000000000E+0
   LON6    7.00000000000000E-1
   LON7    6.00000000000000E-1
   LON8    8.00000000000000E-1
   LON12    1.00000000000000E+0

NonLinearIncrement       0   Yes  "SLE_251"
   LON1    1.00000000000000E+0
   LON2    1.00000000000000E+0
   LON3    1.00000000000000E+0
   LON6    7.00000000000000E-1
   LON9    6.00000000000000E-1
   LON8    8.00000000000000E-1
   LON12    1.00000000000000E+0

NonLinearIncrement       0   Yes  "SLE_252"
   LON1    1.00000000000000E+0
   LON2    1.00000000000000E+0
   LON4    1.00000000000000E+0
   LON6    7.00000000000000E-1
   LON9    6.00000000000000E-1
   LON8    8.00000000000000E-1
   LON12    1.00000000000000E+0

NonLinearIncrement       0   Yes  "SLE_253"
   LON1    1.00000000000000E+0
   LON2    1.00000000000000E+0
   LON3    1.00000000000000E+0
   LON6    7.00000000000000E-1
   LON7    6.00000000000000E-1
   LON10    8.00000000000000E-1
   LON11    1.00000000000000E+0

NonLinearIncrement       0   Yes  "SLE_254"
   LON1    1.00000000000000E+0
   LON2    1.00000000000000E+0
   LON4    1.00000000000000E+0
   LON6    7.00000000000000E-1
   LON7    6.00000000000000E-1
```

```
   LON10    8.00000000000000E-1
   LON11    1.00000000000000E+0

NonLinearIncrement       0   Yes  "SLE_255"
   LON1    1.00000000000000E+0
   LON2    1.00000000000000E+0
   LON3    1.00000000000000E+0
   LON6    7.00000000000000E-1
   LON9    6.00000000000000E-1
   LON10    8.00000000000000E-1
   LON11    1.00000000000000E+0

NonLinearIncrement       0   Yes  "SLE_256"
   LON1    1.00000000000000E+0
   LON2    1.00000000000000E+0
   LON4    1.00000000000000E+0
   LON6    7.00000000000000E-1
   LON9    6.00000000000000E-1
   LON10    8.00000000000000E-1
   LON11    1.00000000000000E+0

NonLinearIncrement       0   Yes  "SLE_257"
   LON1    1.00000000000000E+0
   LON2    1.00000000000000E+0
   LON3    1.00000000000000E+0
   LON6    7.00000000000000E-1
   LON7    6.00000000000000E-1
   LON10    8.00000000000000E-1
   LON12    1.00000000000000E+0

NonLinearIncrement       0   Yes  "SLE_258"
   LON1    1.00000000000000E+0
   LON2    1.00000000000000E+0
   LON4    1.00000000000000E+0
   LON6    7.00000000000000E-1
   LON7    6.00000000000000E-1
   LON10    8.00000000000000E-1
   LON12    1.00000000000000E+0

NonLinearIncrement       0   Yes  "SLE_259"
   LON1    1.00000000000000E+0
   LON2    1.00000000000000E+0
   LON3    1.00000000000000E+0
   LON6    7.00000000000000E-1
   LON9    6.00000000000000E-1
   LON10    8.00000000000000E-1
   LON12    1.00000000000000E+0

NonLinearIncrement       0   Yes  "SLE_260"
   LON1    1.00000000000000E+0
   LON2    1.00000000000000E+0
   LON4    1.00000000000000E+0
   LON6    7.00000000000000E-1
   LON9    6.00000000000000E-1
```

```
      LON10    8.00000000000000E-1
      LON12    1.00000000000000E+0

   NonLinearStage       Unstaged


/ ____________________________________________________________________________
/ NATURAL FREQUENCY SOLVER DATA

   FreqNumModes           100

   FreqShift              0.00000000000000E+0

   FreqIncludeNSMass        1       2       3       4
   FreqModeParticipation   TRUE
    0.00000000000000E+0      0.00000000000000E+0      0.00000000000000E+0
    0.00000000000000E+0      0.00000000000000E+0      0.00000000000000E+0
    0.00000000000000E+0      0.00000000000000E+0      0.00000000000000E+0


/ ____________________________________________________________________________
/ SPECTRAL RESPONSE SOLVER DATA

   SpectralDirectionVector   "SLV-X"
      1     9.81000000000000E+0      0.00000000000000E+0
0.00000000000000E+0

   SpectralDirectionVector   "SLV-Y"
      1     0.00000000000000E+0      9.81000000000000E+0
0.00000000000000E+0

   SpectralDirectionVector   "SLC-X"
      2     9.81000000000000E+0      0.00000000000000E+0
0.00000000000000E+0

   SpectralDirectionVector   "SLC-Y"
      2     0.00000000000000E+0      9.81000000000000E+0
0.00000000000000E+0

   SpectralResultModal   TRUE

   SpectralResultSRSS   FALSE

   SpectralResultCQC    TRUE

   SpectralType         Response

   SpectralResultsSign   Auto


/ ____________________________________________________________________________
/ HEAT SOLVER DATA

   LoadSetHeat              1       2       3       4       5       6       7
```

```
   9
      8      10      11      12

   HeatTempLoadCase         1

   HeatNonlinear        FALSE


/ ____________________________________________________________________________
/ GENERAL SOLVER DATA

   SolverTempDependence   None

   SolverLoadCaseTempDependence       0

   SolverActiveStage        0

   SturmCheck           FALSE

   SolverFreedomCase        1

   ModalLoadType        BaseAcceleration

   ModalNodeReactType   Element

   DampingType          Modal

   RayleighFactors      Frequency
    1.00000000000000E+0      1.00000000000000E+1      1.00000000000000E+0
1.00000000000000E+1      1.00000000000000E-2      1.00000000000000E-2

   NonLinearGeometry    FALSE

   NonLinearMaterial    FALSE

   IncludeCreep         FALSE


   SolverDefaultsGeneral
     SolDefMatrixZeroDiag     1.00000000000000E-20
     SolDefConjGradTol      1.00000000000000E-5
     SolDefMaxConjGradIter    5000
     SolDefMaxNumWarnings      10
     SolDefWindowState        3
     SolDefReducedLogFile   TRUE
     SolDefDoResidualsCheck   FALSE
     SolDefSuppressAllSingularities   FALSE

   SolverDefaultsElements
     SolDefMinDimension     1.00000000000000E-9
     SolDefMinInternalAngle     1.50000000000000E+1
     SolDefZeroPointForce     1.00000000000000E-6
     SolDefZeroDiagonal     1.00000000000000E-20
     SolDefBeamMass       Lumped
```

```
  SolDefPlateMass      Lumped
  SolDefBrickMass      Lumped
  SolDefBeamLoads      Consistent
  SolDefPlateLoads     Consistent
  SolDefBeamSlices         5
  SolDefIncludeLinkReactions   TRUE

SolverDefaultsDrilling
  SolDefZeroTrans        1.00000000000000E-8
  SolDefZeroRot          1.00000000000000E-6
  SolDrillStiffMult      1.00000000000000E-4
  SolDrillZeroEig        1.00000000000000E-6
  SolDefMaxNormalsAngle     5.00000000000000E+0
  SolDefForceDrillingCheck   FALSE

SolverDefaultsIteration
  SolDefZeroDisp         1.00000000000000E-8
  SolDefDispNormTol      1.00000000000000E-4
  SolDefResidualsNormTol     1.00000000000000E-3
  SolDefNonlinIterLimit      20
  SolDefAddIterations   TRUE
  SolDefMaxUpdateInterval       5
  SolDefMaxDispChange     1.00000000000000E+0
  SolDefMaxResidualChange     1.00000000000000E-1
  SolDefFormStiffnessMatrix       0
  SolDefFormHeatStiffnessMatrix       2
  SolDefHeatConvergenceTol     1.00000000000000E-5
  SolDefHeatRelaxationFactor     6.66670000000000E-1
  SolDefNonlinHeatIterLimit      20

SolverDefaultsSubSteps
  SolDefSubStepping        0
  SolDefMinLoadReductionFactor     1.00000000000000E-1
  SolDefMaxRot           3.00000000000000E+1
  SolDefMaxDispRatio     1.00000000000000E-1
  SolDefMinArcLength     1.00000000000000E-3
  SolDefMaxFibreInc      1.00000000000000E-2
  SolDefSaveSubIncrements   FALSE
  SolDefDynamicAutoSteppingMode       0
  SolDefMinTimeStep      1.00000000000000E-3
  SolDefConsiderTableSteps  FALSE
  SolDefSingleShotRestart  FALSE
  SolDefAutoAssignPathDiv  FALSE

SolverDefaultsNonlinear
  SolDefIncludeKG      TRUE
  SolDefAutoScaleKg   TRUE
  SolDefIgnoreCompressiveBeamKg  FALSE
  SolDefBeamKgType     Simplified
  SolDefFiniteStrainDefinition   Nominal
  SolDefBeamLength     Initial
  SolDefRatioMNL         5.00000000000000E-1
  SolDefZeroContactFactor     1.00000000000000E-6
  SolDefSlidingFriction     1.00000000000000E-15
```

```
    SolDefStickingFriction     1.00000000000000E+0
    SolDefFrictionCutoffStrain     1.00000000000000E-5
    SolDefScaleSupports  TRUE

  SolverDefaultsCreep
    SolDefTimeStepParam     5.00000000000000E-1
    SolDefMinViscoUnits       3
    SolDefMaxViscoUnits       6
    SolDefCurveFitTime     1.00000000000000E+4
    SolDefCurveFitTimeUnit   d
    SolDefSpacingBias      5.00000000000000E-1
    SolDefDoInstantNTA  TRUE

  SolverDefaultsEigenvalue
    SolDefZeroFreq         1.00000000000000E-6
    SolDefZeroBuckEigenvalue     1.00000000000000E-10
    SolDefExpandWorkingSetBy       6
    SolDefEigIterLimit     200
    SolDefEigIterTol       1.00000000000000E-5
    SolDefEigAutoShift  FALSE

  SolverDefaultsDynamics
    SolDefWilsonTheta      1.37000000000000E+0
    SolDefNewmarkBeta      5.00000000000000E-1
    SolDefTransientMethod   Newmark
    SolDefExcludeMassComponents
    SolDefIncludeRotMass   TRUE



/ ____________________________________________________________________________
/ RESULT OPTIONS

  ResultOptions
    ResOptsRotationUnit   Degrees
    ResOptsHRADisplacement   Total
    ResOptsHRAVelocity   Total
    ResOptsHRAAcceleration   Relative
    ResOptsBeamForceMoment   Principal
    ResOptsStageDisplacement   BirthStage
```

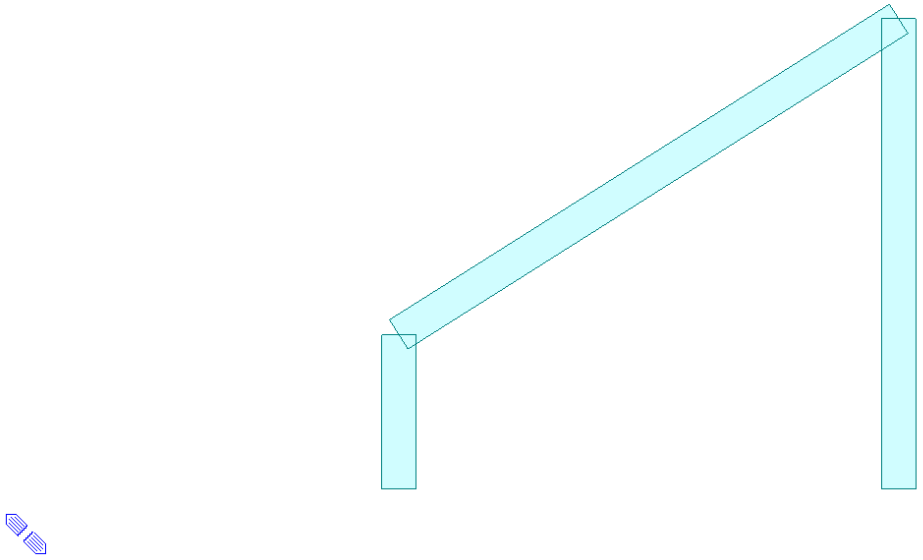

Figure 1 UNDEFORMED

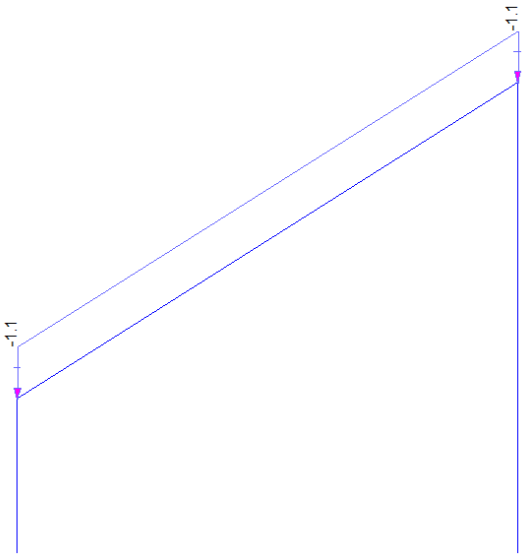

Figure 2 DL

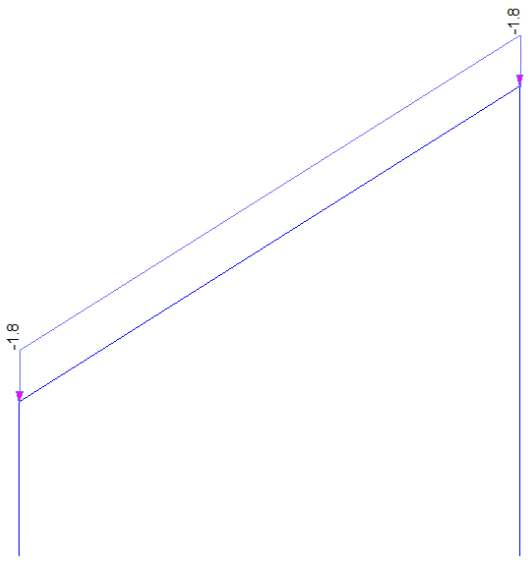

Figure 3 LL

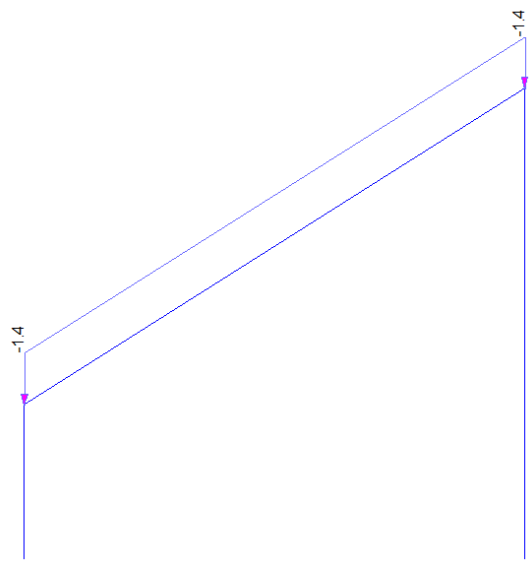

Figure 4 SL

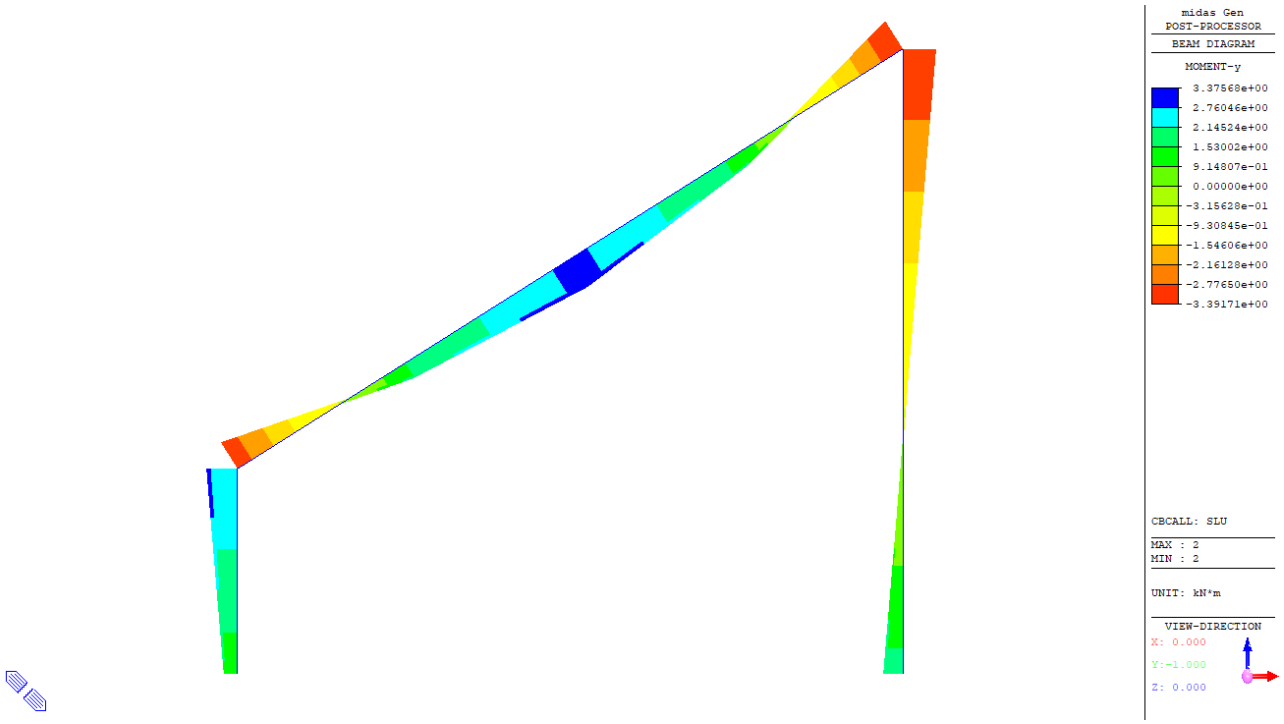

Figure 5 SLUMy

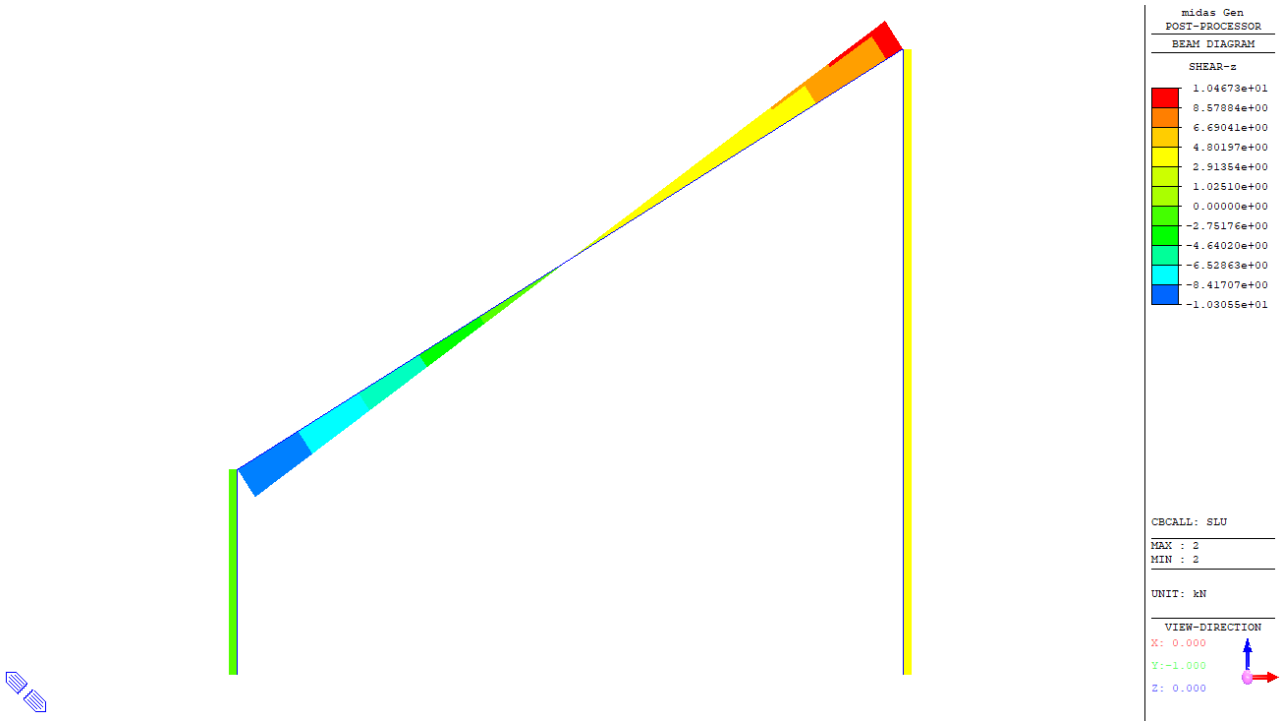

Figure 6 SLUFz

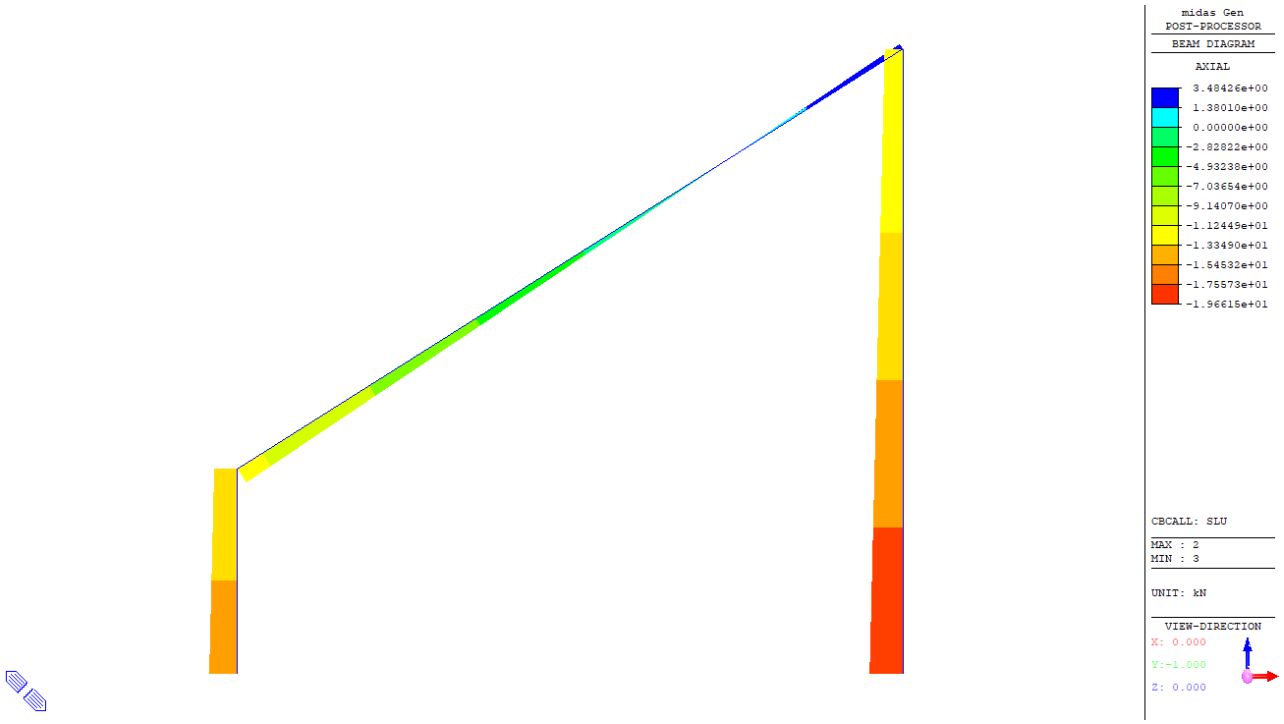

Figure 7 SLUFx

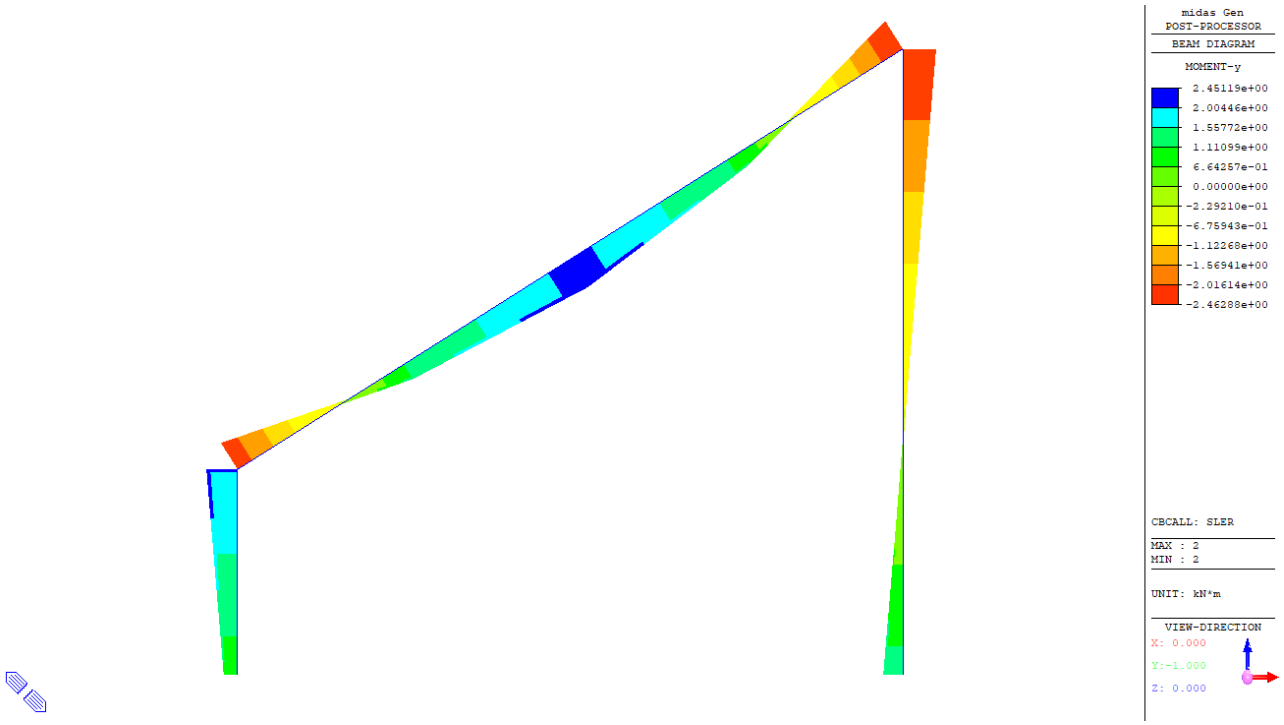

Figure 8 SLERMy

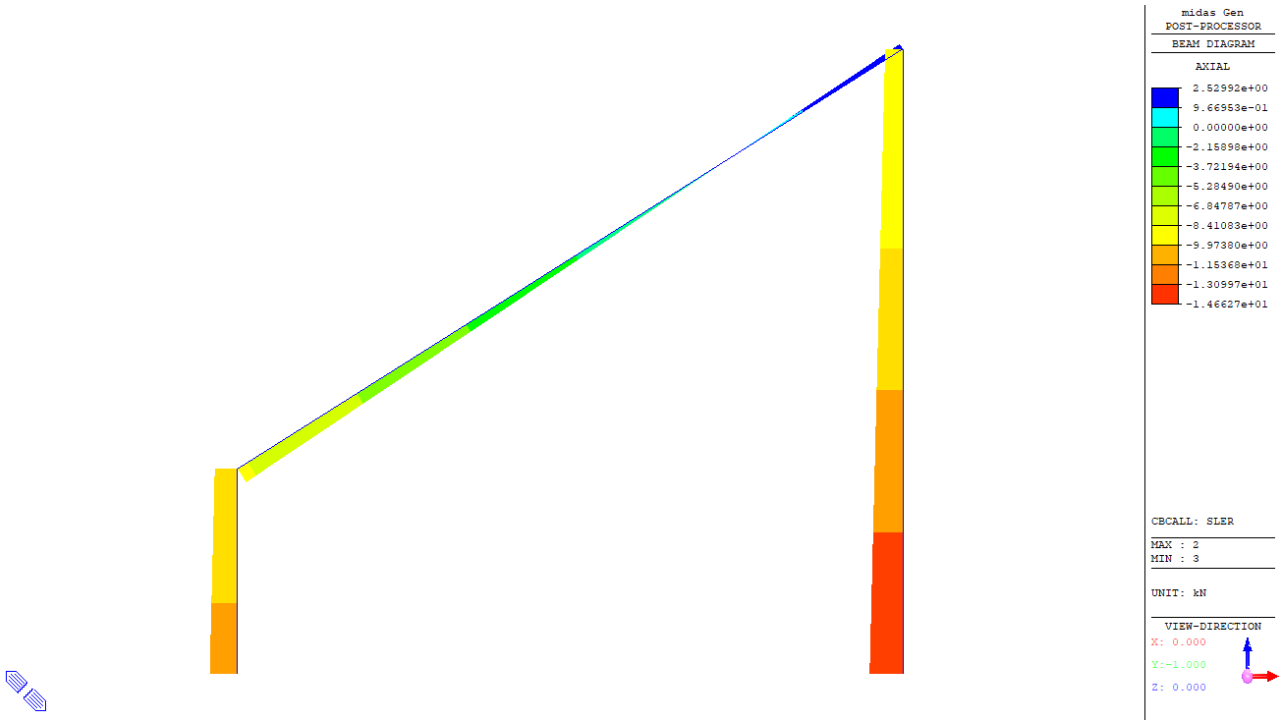

Figure 9 SLERFx

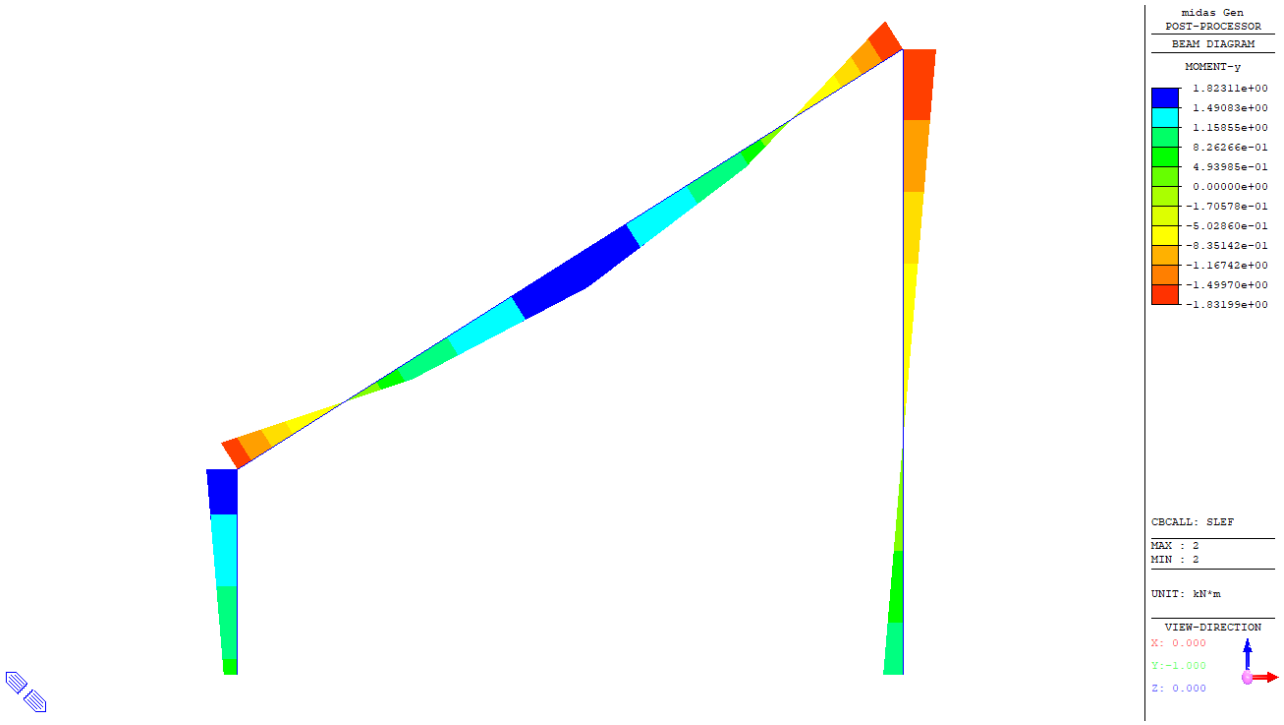

Figure 10 SLEFMy

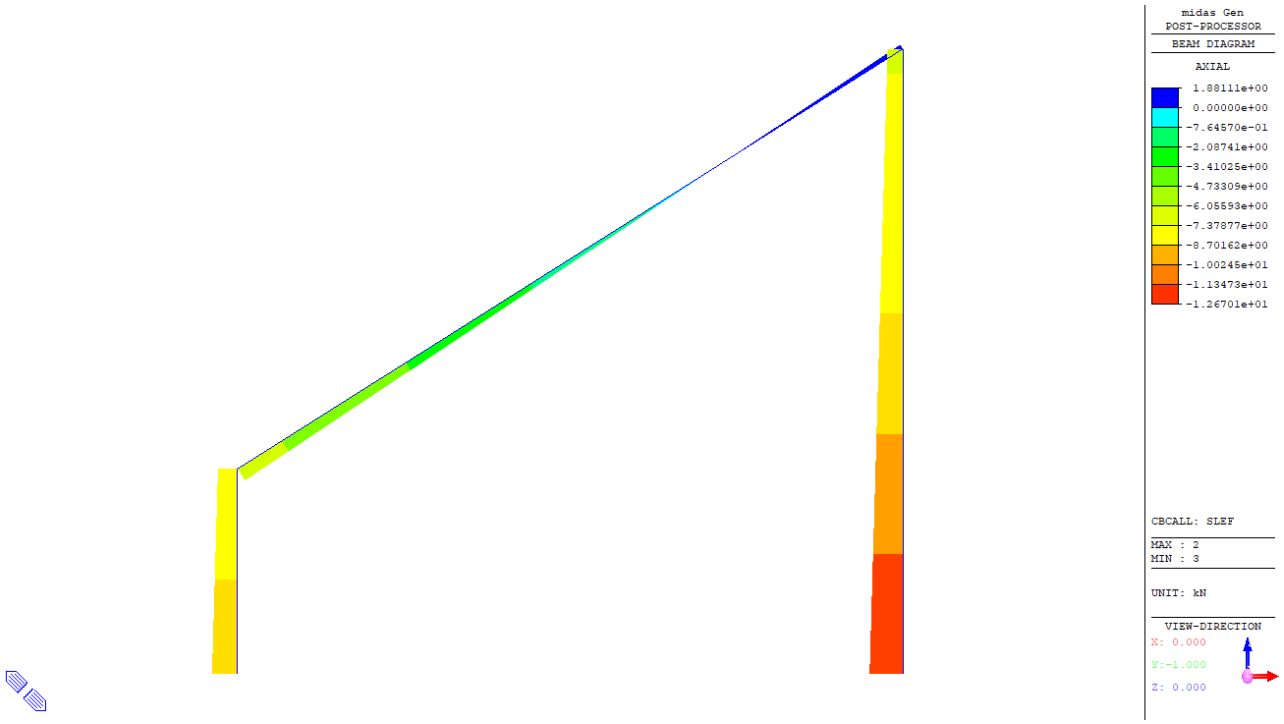

Figure 11 SLEFFx

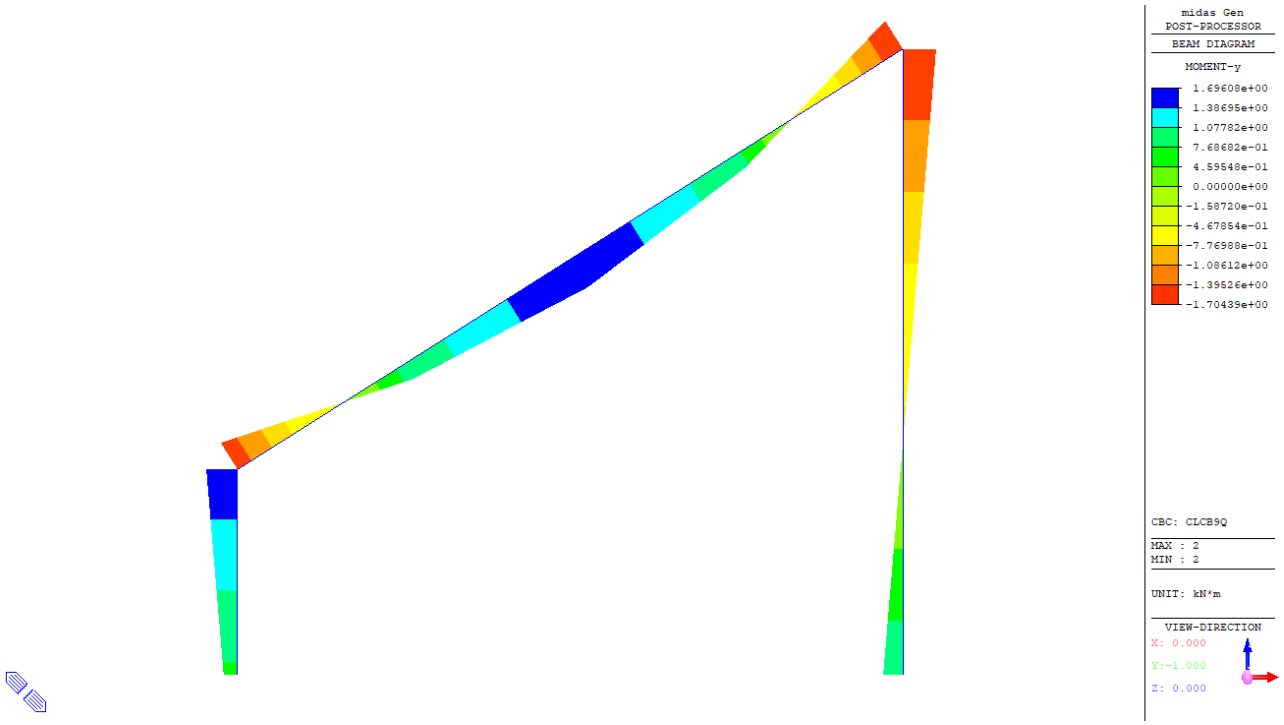

Figure 12 SLEQMy

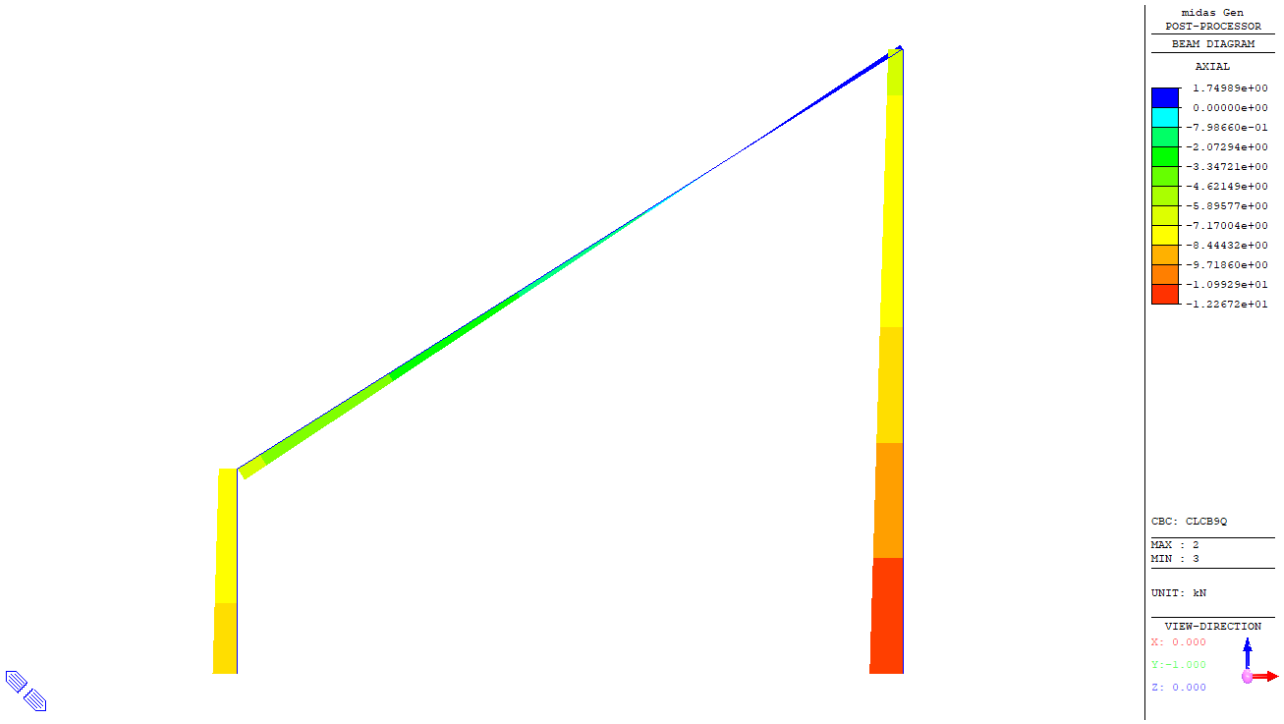

Figure 13 SLEQFx

Table 1 NodeGCS

Node	X (m)	Y (m)	Z (m)
1	0.000000	0.000000	0.000000
2	2.170000	0.000000	0.000000
3	2.170000	0.000000	2.040000
4	0.000000	0.000000	0.670000

Table 2 Element

Element	Type	Wall ID	Material	Property	B-Angle ([deg])	Node1	Node2
1	BEAM	0	1	1	0.00	1	4
2	BEAM	0	1	1	0.00	4	3
3	BEAM	0	1	1	0.00	2	3

Table 3 Matl

ID	Name	Type	Standard	DB	Use Mass Density	Elasticity (kN/m^2)	Poisson	Thermal (1/[F])	Density (kN/m^3)	Mass Density (kN/m^3/g)	Standard2
1	C25/30	Concrete	EN04(RC)	C25/30	X	3.1475e+07	0.2	5.5556e-06	2.5000e+01	2.5493e+00	

Table 4 ReacG

Node	Load	FX (kN)	FY (kN)	FZ (kN)	MX (kN*m)	MY (kN*m)	MZ (kN*m)
1	SW	0.932551	0.000000	7.148126	0.000000	-0.500028	0.000000
2	SW	-0.932551	0.000000	10.659323	0.000000	-0.707092	0.000000
1	DL	0.247082	0.000000	1.296854	0.000000	-0.132094	0.000000
2	DL	-0.247082	0.000000	1.003346	0.000000	-0.186363	0.000000
1	LL	0.496195	0.000000	2.604368	0.000000	-0.265273	0.000000
2	LL	-0.496195	0.000000	2.014938	0.000000	-0.374258	0.000000
1	SL	0.391442	0.000000	2.054557	0.000000	-0.209271	0.000000
2	SL	-0.391442	0.000000	1.589562	0.000000	-0.295248	0.000000
SUMMATION OF REACTION FORCES PRINTOUT							
	Load	FX (kN)	FY (kN)	FZ (kN)			
	SW	0.000000	0.000000	17.807450			
	DL	0.000000	0.000000	2.300200			
	LL	0.000000	0.000000	4.619306			
	SL	0.000000	0.000000	3.644120			

Table 5 1 : 0.9x0.15

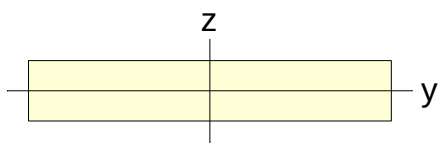

A(m ^{2})	Asy(m ^{2})	Asz(m ^{2})	z(+)(m)	z(-)(m)
0.135	0.113	0.113	0.075	0.075
Ixx(m ^{4})	Iyy(m ^{4})	Izz(m ^{4})	y(+)(m)	y(-)(m)

0.001	0.000	0.009	0.450	0.450