COMMITTENTE:

RFI RETE FERROVIARIA ITALIANA
GRUPPO FERROVIE DELLO STATO ITALIANE

DIREZIONE LAVORI:

ITALFERR
GRUPPO FERROVIE DELLO STATO ITALIANE

APPALTATORE:

webuild Implenia
CONSORZIODOLOMITI

PROGETTAZIONE:

MANDATARIA: SWS

MANDANTI: PINI ITALIA, GDP GEOMIN, S.I.F.E.L. S.p.A., SISt Studio di Ingegneria Strutturale Organte & Bortot

IL DIRETTORE DELLA PROGETTAZIONE:
Ing. Paolo Cucino
Responsabile integrazione fra le varie prestazioni specialistiche

ORDINE DEGLI INGEGNERI DELLA PROV. DI TRENTO

PROGETTO ESECUTIVO

TIPO DI ELABORATO:
☐ DI DETTAGLIO
☐ DI MODIFICA TECNICA

PROGETTAZIONE ESECUTIVA ED ESECUZIONE DEI LAVORI DI REALIZZAZIONE DEL LOTTO 1 DEL QUADRUPLICAMENTO DELLA LINEA FERROVIARIA FORTEZZA-VERONA

TRATTA "FORTEZZA – PONTE GARDENA"

RELAZIONE

08 - GALLERIE

L - FINESTRA CHIUSA

Imbocco

Finestra Chiusa - Relazione di calcolo delle opere definitive di imbocco

APPALTATORE		SCALA:
IL DIRETTORE TECNICO Ing. Pietro Gianvecchio		-

COMMESSA	LOTTO	FASE	ENTE	TIPO DOC.	OPERA/DISCIPLINA	PROGR.	REV.
IB0U	1B	E	ZZ	CL	GA0500	002	B

Rev.	Descrizione	Redatto	Data	Verificato	Data	Approvato	Data	Autorizzato Data
A	Emissione per indicazione Committenza	B. Fiorentino	18/07/2022	M. Iacorossi	19/07/2022	D. Buttafoco Dolomiti	20/07/2022	IL PROGETTISTA A.Polli 09/03/2023
B	Emissione a seguito di istruttorie e interlocuzioni	B. Fiorentino	25/02/2023	P. Fontana	26/02/2023	D. Buttafoco	27/02/2023	

File: IB0U1BEZZCLGA0500002B.docx		n. Elab.: 1

Sommario

1. INTRODUZIONE

Nell'ambito della Progettazione Esecutiva della linea ferroviaria Fortezza – Ponte Gardena Lotto 1 – Finestra di Chiusa, la presente relazione presenta le problematiche progettuali e il dimensionamento e la verifica degli interventi necessari all'esecuzione delle opere di imbocco della galleria naturale di Chiusa, con particolare riferimento alle opere definitive quali becco di flauto, galleria artificiale e concio d'attacco.

La Finestra di Chiusa è una galleria a canna singola con una lunghezza complessiva di circa 1724m, di cui 16.1 m in artificiale e i restanti eseguiti in tradizionale. L'imbocco è situato in corrispondenza dell'abitato di Chiusa (BZ), in riva sinistra del Fiume Isarco, a monte del tracciato della SS242, ad una quota altimetrica di circa 610m slm.

Il versante su cui si innesta l'opera è caratterizzato da una moderata pendenza (circa 31-32°) e dalla presenza di rocce tipo fillade e di uno strato detritico nella zona più superficiale di spessore variabile. La tipologia di tale deposito varia da colluviale, a detriti di versante, a deposito morenico.

Nello specifico, in questo documento vengono descritte e verificate le opere di imbocco e vengono definite le modalità di realizzazione delle stesse. vengono illustrate le soluzioni progettuali adottate e le verifiche strutturali delle gallerie artificiali.

La relazione è strutturata come segue:

- Il Capitolo 2 riporta i documenti di riferimento (elaborati di progetto, normative di riferimento e riferimenti bibliografici);
- Il Capitolo 3 fornisce una breve descrizione delle opere oggetto della presente relazione;
- Il Capitolo 4 riporta una sintesi delle condizioni geologiche e geotecniche previste nell'area di progetto;
- Il Capitolo 5 illustra le caratteristiche meccaniche degli elementi strutturali previsti in progetto;
- Il Capitolo 6 illustra le tipologie di verifiche eseguite, gli approcci progettuali adottati;
- Il Capitolo 7 fornisce una descrizione delle metodologie di analisi;
- I Capitoli 8 e 10 presentano le sezioni di calcolo, i parametri assunti e i risultati delle analisi, rispettivamente per la galleria artificiale e per il concio di attacco;
- I Capitoli 9 e 11 illustrano gli esiti delle verifiche geotecniche e strutturali, rispettivamente per la galleria artificiale e per il concio di attacco.

La relazione è completata da un'appendice di calcolo che riporta gli output principali delle analisi numeriche condotte.

2. DOCUMENTI DI RIFERIMENTO

2.1 ELABORATI DI RIFERIMENTO

[1] Doc. n. IB0U1AEZZRHGE0000001A: "Relazione geologica – idrogeologica – geomorfologica Imbocchi Finestre Forch, Funes, Chiusa e relative viabilità".

[2] Doc. n. IB0U1AEZZGEGE0006002A: "Relazione geotecnica di caratterizzazione – opere parte A".

2.2 NORMATIVE E RACCOMANDAZIONI

[3] D. M. Infrastrutture 14 gennaio 2008 (NTC 2008) "Nuove Norme tecniche per le costruzioni".

[4] CIRCOLARE 2 febbraio 2009, n. 617 "Istruzione per l'applicazione delle «Nuove norme tecniche per le costruzioni» di cui al decreto ministeriale 14 gennaio 2008".

[5] UNI EN 1992-1-1 novembre 2005 (EC2) "Progettazione delle strutture di calcestruzzo – Parte 1: Regole generali e regole per edifici".

[6] UNI EN 1998-5 gennaio 2005 (EC8) "Progettazione delle strutture per la resistenza sismica– Parte 5: Fondazioni, strutture di contenimento ed aspetti geotecnici".

[7] Regolamento U.E. nr. 1299/2014 della commissione del 18 novembre 2014 relativo alle specifiche tecniche di interoperabilità per il sottosistema «infrastruttura» del sistema ferroviario dell'Unione europea. Pubblicato su Gazzetta Ufficiale anno 156° n°10 del 5 febbraio 2015.

[8] Regolamento U.E. nr. 1303/2014 della commissione del 18 novembre 2014 relativo alla specifica tecnica di interoperabilità concernente la «sicurezza nelle gallerie ferroviarie» del sistema ferroviario dell'Unione europea (norma STI).

[9] AICAP-AGI (2012). Ancoraggi nei terreni e nelle rocce. Raccomandazioni.

2.3 SPECIFICHE TECNICHE

La presente fase progettuale, fa riferimento al nuovo Manuale di Progettazione RFI.

[10] Manuale di Progettazione delle Opere Civili. Parte II – Sezione 4 – Gallerie (RFI DTC SI GA MA IFS 001 A). Emissione 30/12/2016.

[11] Manuale di Progettazione delle Opere Civili. Parte II – Sezione 3 – Corpo Stradale (RFI DTC SI CS MA IFS 001 A). Emissione 30/12/2016.

[12] Manuale di Progettazione delle Opere Civili. Parte II – Sezione 6 – Sagome e Profilo minimo degli ostacoli (RFI DTC SI CS MA IFS 003 A). Emissione 30/12/2016.

[13] Manuale di Progettazione delle Opere Civili. Parte II – Sezione 2 – Ponti e strutture (RFI DTC SI PS MA IFS 001 A). Emissione 30/12/2016.

2.4 BIBLIOGRAFIA

[14] Bustamante M. et Doix B., "Une mèthode pour le calcul des tirants et des micropieux injectès", Bulletin liasion LCPC, Nov. - Dec. 1985.

[15] Caquot A., Kerisel J. (1948) "Tables for the calculation of passive pressure, active pressure and bearing capacity of foundations" Gautiers-Villars, Paris.

[16] Lancellotta R. (2007), "Lower Bound approach for seismic passive earth resistance", Geotechnique, Technical Note, 57, 1-3.

[17] Mueller-Breslau (1906), "Erddruck anf Stuetzmanern" Kroener.

[18] C. Viggiani (1999). Fondazioni, Hevelius Edizioni;

[19] A.W. Bishop (1955). The use of the slip circle in the stability analysis of slopes. Geotechnique, 5, 7-17;

[20] N. Janbu (1954). Stability analysis of slopes with dimensionless parameters. Harvard Soil Mechanics Series;

[21] N.R. Morgestern & V.E. Price (1965). The analysis of the stability of generalised slip surfaces. Geotechnique, 15, 79-93.

[22] Mononobe N. (1929) "Earthquake-proof construction of masonry dams", Proc. of World Engineering Conference, vol.9, p.275.

[23] PARATIE PLUS (versione 22.0.0) – CEAS Srl – Manuali di utilizzo, Sett. 2021.

[24] Slide (versione 6.032) – Rocscience Inc. – Software manuals, 2014.

3. DESCRIZIONE DELLE OPERE E FASI ESECUTIVE

3.1 GENERALE

La finestra di Chiusa ha la funzione di mettere in comunicazione la galleria Gardena con l'esterno in corrispondenza dell'abitato di Chiusa. La struttura è localizzata in corrispondenza dell'abitato di Chiusa (BZ), in riva sinistra del Fiume Isarco, a monte del tracciato della SS242, ad una quota altimetrica di circa 610m slm su un versante caratterizzato dalla presenza di rocce tipo fillade, con la presenza di uno strato detritico nella zona più superficiale di spessore variabile.

Di seguito sono elencate le progressive di riferimento dell'opera d'imbocco (binario pari):

- da pk 0+000 a pk 0+011.0 (L=11.0 m) galleria artificiale – portale a becco di flauto;
- da pk 0+011.0 a pk 0+016.14 (L=5.14 m) galleria artificiale – sezione policentrica;
- da pk 0+016.1 a pk 0+021.14 (L=5.0 m) galleria artificiale – dima d'attacco.

La galleria naturale, da pk 0+021.14 a pk 1+784.1, presenta coperture generalmente elevate con valori massimi fino a 575 m, ed un andamento altimetrico in discesa con pendenza costante pari al 6.32%.

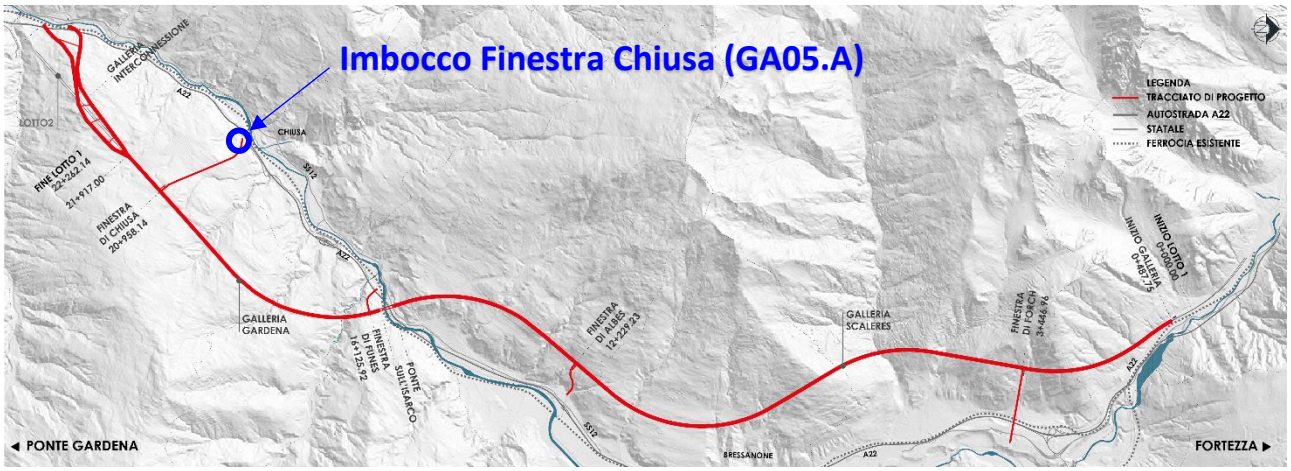

Fig. 1 – Tracciato della tratta "Fortezza – Ponte Gardena"

3.2 INTERFERENZE LUNGO IL TRACCIATO

In prossimità dell'opera è presente un gasdotto interrato SNAM, che presenta un'area di pertinenza di 8.0m (Fig. 2). L'elemento e l'intera fascia di rispetto risultano al di fuori delle aree di scavo e di conseguenza non interferiscono con l'opera in oggetto.

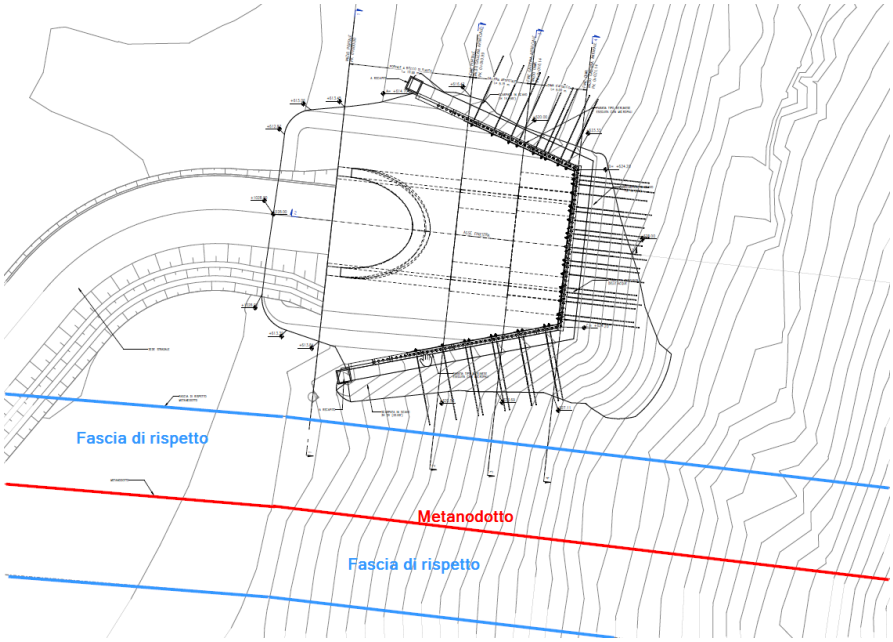

Fig. 2 -Tracciato del gasdotto e fascia di rispetto

3.3 GALLERIA ARTIFICIALE

Completato lo scavo fino alla quota di progetto, sulla paratia frontale vengono eseguiti i consolidamenti previsti per il concio d'attacco e viene realizzata la dima.

La carpenteria della galleria artificiale ha sezione interna di tipo policentrico; l'arco rovescio ha uno spessore pari a 90 cm con raggio di curvatura interno pari a 8 metri, la calotta ha uno spessore pari a 80 cm e raggio di curvatura interno pari a 3.45 m. I piedritti hanno sezione minima pari a 1.00 m e sezione massima pari a circa 1.60 m.

La galleria artificiale ha uno sviluppo longitudinale pari a 16.14 m (compreso il portale con taglio a "becco di flauto"). Il rinfianco e ritombamento al di sopra della calotta della galleria artificiale verranno realizzati con materiali provenienti dallo scavo; verranno utilizzate le filladi alterate presenti in sito, rimodellate lungo le scarpate di progetto. Lo spessore massimo di ricoprimento al di sopra della calotta è pari a 3.00 metri, e corrisponderà ad una riprofilatura dell'area equivalente alla situazione "ante operam".

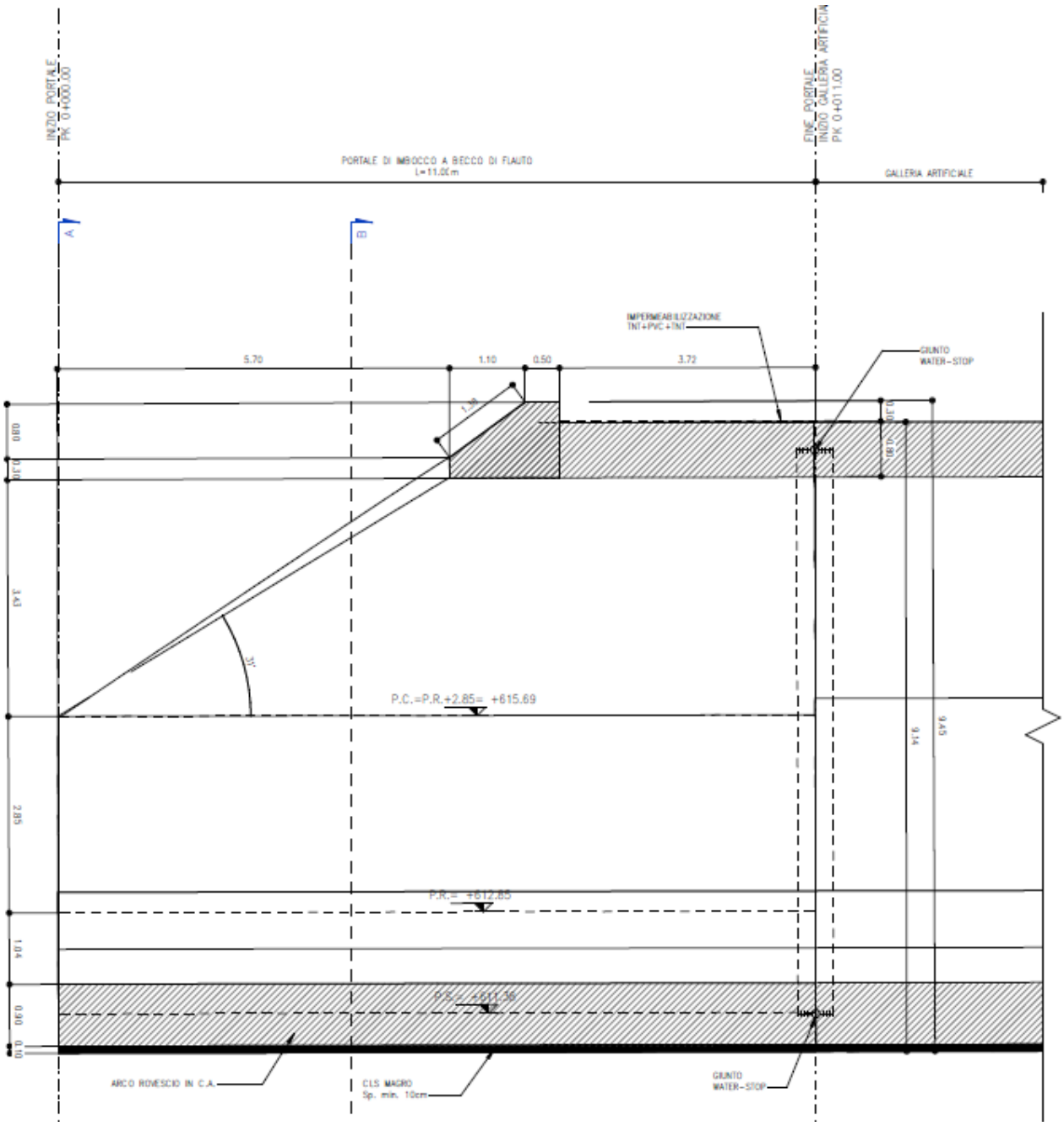

Fig. 2 - Finestra Chiusa: galleria artificiale (vista in sezione longitudinale)

3.4 CONCIO DI ATTACCO

Gli interventi in avanzamento e il rivestimento di prima fase del concio di attacco sono i seguenti:

- Il campo di avanzamento è pari a 10 m.

- Precontenimento al fronte realizzato mediante n° 19 colonne in jet-grouting ϕ1100 L=18.0 m e sovrapposizione minima 8.0 m.
- Presostegno al contorno mediante n° 19 tubi in acciaio ϕ127 mm, sp=10mm, L=16.0 m sovrapposizione minima 5.0 m, valvolati (1vlv/m), passo variabile 0.4 ÷ 0.64 m, compresi all'interno di un angolo di 120° in calotta. È prevista una variabilità del ±20%.
- Precontenimento al contorno mediante n° 30 colonne in jet-grouting ϕ1100 L=15.0 m con passo variabile 0.57 ÷ 0.8 m con sovrapposizione minima di 5.0 m.
- Applicazione di uno strato di spritz beton fibrorinforzato al fronte con spessore pari a 0.05 m su ogni sfondo e con spessore pari a 0.10 m per ogni fine campo.
- Eventuali 2+2 drenaggi in avanzamento, in caso di presenza d'acqua, L=24.0 m, sovrapposizione minima di 11.0 m, diametro esterno ϕ>60 mm, spessore 5 mm, rivestiti con calza in TNT.
- Rivestimento di prima fase composto da 0.30 m di spritz beton e doppie centine IPN 180 con interasse 1.0 m, al quale è associata una variabilità del ±20%. Le centine dono previste eventualmente anche in arco rovescio.
- Impermeabilizzazione costituita da tessuto non tessuto e manto in PVC.

Il rivestimento definitivo è costituito da:

- Arco rovescio e murette in calcestruzzo armato, con spessore 0.90 m.
- Calotta in calcestruzzo armato con spessore variabile tra 0.55 ÷ 1.65 m

Le macrofasi costruttive sono le seguenti:

- Fase 1: sagomatura del fronte a forma concava, esecuzione sul fronte di avanzamento di uno strato di spritz-beton ed esecuzione del precontenimento al fronte secondo la geometria di progetto.
- Fase 2: esecuzione del precontenimento e del presostegno del contorno secondo la geometria di progetto.
- Fase 3: esecuzione dei drenaggi in avanzamento (eventuale).
- Fase 4: esecuzione dello scavo a piena sezione per singoli sfondi di lunghezza pari a 1.0m, sagomando il fronte a forma concava e per una lunghezza massima del campo di scavo pari a 6.5 m.
- Fase 5: posa in opera del rivestimento di prima fase, contestualmente allo scavo, costituito da centine metalliche e da uno strato di spritz beton. Le centine dovranno essere collegate tra loro attraverso le apposite catene. La massima distanza del prerivestimento dal fronte è pari a 0.5 m.
- Fase 6: scavo dell'arco rovescio, armatura e getto dell'arco rovescio e delle murette ad una distanza massima dal fronte di scavo di 1.0D (tale distanza potrà essere ridefinita in funzione del comportamento deformativo del cavo).
- Fase 7: posa in opera dell'impermeabilizzazione conformemente alle indicazioni di progetto.

- Fase 8: getto del rivestimento di calotta ad una distanza massima dal fronte di scavo di 1.5D (tale distanza potrà essere ridefinita in corso d'opera in funzione del comportamento deformativo del cavo).

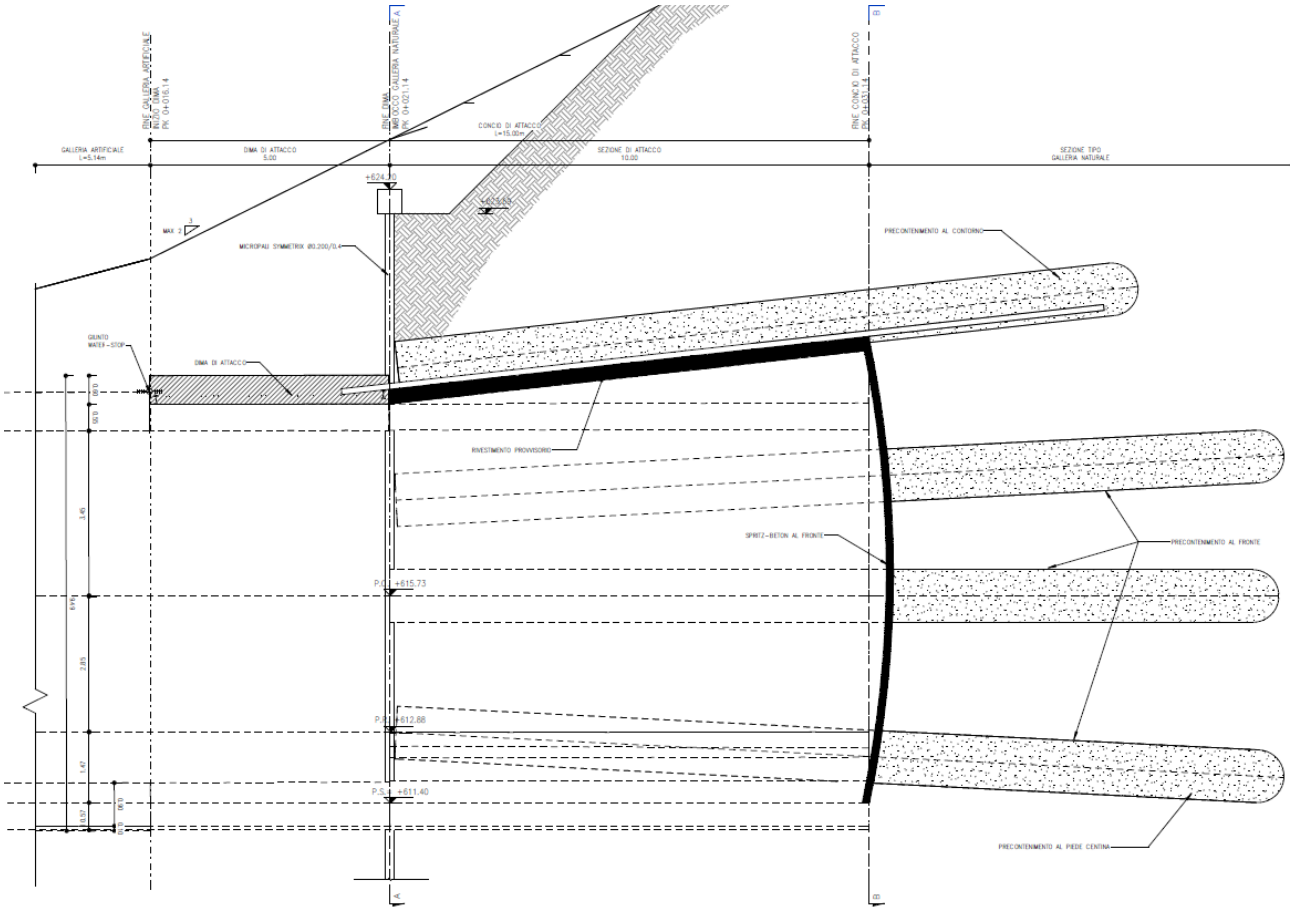

Fig. 2 – Finestra Chiusa: concio di attacco (vista in sezione longitudinale)

3.5 FASI ESECUTIVE

Le principali fasi esecutive per la realizzazione dell'imbocco di chiusa sono le seguenti:

- cantierizzazione dell'area e realizzazione della viabilità di accesso;
- esecuzione degli sbancamenti a monte della paratia
- esecuzione dei micropali
- realizzazione del cordolo di testa;

- scavo fino alla quota di progetto (611.90m slm) procedendo per ribassi successivi, con immediata esecuzione di spritz-beton, esecuzione dei tiranti e messa in opera delle travi di ripartizione (4 ordini di tiranti sulla paratia frontale e 3 ordini sulle due "ali" laterali);
- realizzazione degli infilaggi al fronte per il sostegno del primo concio di scavo (concio d'attacco);
- realizzazione della dima d'attacco;
- scavo di ribasso per l'arco rovescio e realizzazione della galleria artificiale e del becco di flauto;
- ritombamento.

4. CONDIZIONI GEOLOGICHE, GEOTECNICHE E SISMICHE

Le condizioni geologiche e geotecniche previste nell' area di progetto sono descritte in dettaglio nelle relazioni di cui ai Riff. [1]-[2] e sintetizzate nei paragrafi seguenti.

4.1 INQUADRAMENTO GEOLOGICO E IDROGEOLOGICO

Per una dettagliata descrizione del modello geologico del sito si rimanda al documento "Relazione geologica, geomorfologica ed idrogeologica" (Rif. [1]).

4.2 STRATIGRAFIA DI PROGETTO

Per una descrizione completa delle indagini geotecniche eseguite sul sito si rimanda ai documenti "Relazione geologica, geomorfologica ed idrogeologica" (Rif. [1]) e "Relazione geotecnica di caratterizzazione" (Rif. [2]).

Il modello geotecnico desunto dalle indagini eseguite è discusso nel Rif. [2] e qui riassunto in Tab. 1. Ai fini dei calcoli si sono cautelativamente assunti i parametri riportati di seguito al § 4.3.

Modello geotecnico				
UNITÀ	**γ**	**c'**	**ϕ'**	**E**
	(KN/m³)	***(kPa)***	***(°)***	***(MPa)***
Depositi di falda ("d")	20	0	32÷38	50
Depositi fluvio lacustre ("dt")	19	0	36	50
Porfiroidi porzione alterata (parametri di ammasso)	27	100÷150	37÷42	300÷600
Porfiroidi porzione integra (parametri di ammasso)	27	150÷600	45÷50	900÷1500
Filladi – BSSb (parametri di ammasso)	27	125÷175	45÷50	600÷1200

Tab. 1. Modello geotecnico secondo la "Relazione geotecnica di caratterizzazione" (Rif. [2])

4.3 VALORI CARATTERISTICI DEI PARAMETRI GEOTECNICI

Ai fini delle analisi di simulazione e delle verifiche riportate nella presente relazione, in riferimento alla stratigrafia assunta, si sono assunti i parametri geotecnici caratteristici riportati in Tab. 2.

Per i livelli detritici si è assunta una variabilità progressiva con la profondità su strati di 4m, facendo incrementare l'angolo di attrito da 33° a 36° e comunque nell'ambito della forchetta dei parametri geotecnici del Rif. [2] (32÷38°)

Per la porzione alterata dell'ammasso roccioso di base si sono assunti parametri più cautelativi rispetto a quelli indicati nel Rif. [2].

Stratigrafia e parametri geotecnici di progetto						
STRATO	**Quota da testa cordolo**		γ_k	c_k	ϕ_k	E_k
	da (m)	***a (m)***	***(KN/m³)***	***(kPa)***	***(°)***	***(MPa)***
Deposito granulare 1	0.0	4.0	20	0	33	50
Deposito granulare 2	4.0	8.0	20	0	34	50
Deposito granulare 3	8.0	12.0	20	0	35	50
Deposito granulare 4	12.0	16.5	20	0	36	50
Substrato roccioso (BSSb)	16.5	-	27	123	38.7	450

Tab. 2 - Valori caratteristici dei principali parametrici geotecnici utilizzati nelle analisi per l'imbocco

4.4 REGIME IDRAULICO

Il livello della falda di riferimento è tale da non interessare le opere di imbocco oggetto di questa relazione.

4.5 CARATTERISTICHE DEL SITO E DEFINIZIONE DELL'ACCELERAZIONE SISMICA DI PROGETTO

Le opere in progetto per l'imbocco della galleria "Chiusa" si trovano nel comune di Chiusa, in un sito con le seguenti coordinate geografiche: Latitudine 46.63442, Longitudine 11.56157.

Per galleria artificiale e concio d'attacco si definisce una vita nominale V_N pari a 75 anni e una classe d'uso III a cui corrisponde il coefficiente C_u pari a 1.5 (§ 2.4.2, DM 14/01/2008). Di conseguenza il periodo di riferimento per la definizione dell'azione sismica risulta pari a $V_R = V_N \times C_u = 112.5$.

Con riferimento alla probabilità di superamento dell'azione sismica, P_{VR}, attribuita allo stato limite ultimo di salvaguardia della vita (SLV), nel periodo V_R dell'opera in progetto, si determina il periodo di ritorno T_R del sisma di progetto. Sulla base delle coordinate geografiche del sito e del tempo di ritorno del sisma di progetto, T_R, sopra definito, si ricavano i parametri che caratterizzano il sisma di progetto relativo al sito di riferimento, rigido ed orizzontale (Tabella 1 dell'allegato B del D.M. 14/01/2008):

- a_g: accelerazione orizzontale massima
- F_0: valore massimo del fattore di amplificazione dello spettro in accelerazione orizzontale
- T^*_C: periodo di inizio del tratto a velocità costante dello spettro in accelerazione orizzontale.

Il periodo di ritorno si determina con l'espressione:

$$T_R = -\frac{V_R}{\ln(1 - P_{V_R})}$$

Per tenere conto dei fattori locali del sito, l'accelerazione orizzontale massima attesa al sito è valutata con la relazione (DM 14/01/2008):

$$a_{max} = S_S \cdot S_T \cdot a_g$$

dove:

- a_g è l'accelerazione orizzontale massima attesa su sito di riferimento rigido.
- S_S è il fattore di amplificazione stratigrafica del terreno, funzione della categoria del sottosuolo di fondazione e dei parametri sismici F_0 e a_g/g (Tabella 3.2.V del D.M. 14/01/2008);
- S_T è il fattore di amplificazione che tiene conto delle condizioni topografiche, il cui valore dipende dalla categoria topografica e dall'ubicazione dell'opera (Tabella 3.2.VI del D.M. 14/01/2008).

La categoria di sottosuolo è stata valutata sulla base dei risultati della caratterizzazione geotecnica, in particolare sulla base della velocità delle onde di taglio ponderata sui primi 30 metri di profondità.

Sulla base degli andamenti delle suddette grandezze con la profondità, con riferimento al documento "Relazione geologica, geomorfologica ed idrogeologica" (Rif. [1]) cui si rimanda per maggiori approfondimenti, si individua come categoria di sottosuolo la classe sismica "B".

I valori delle grandezze necessarie per la definizione dell'azione sismica per le opere d'imbocco sono riassunti in Tab. 3.

La definizione dei coefficienti sismici, in accordo a quanto prescritto dalla normativa, è riportata al § 6.1.3, mentre l'effetto del sisma sulle strutture, valutato in termini di azioni sismiche agenti, è valutato al § 7.2.1.

Accelerazione Sismica di progetto – Imbocco Finestra di Chiusa	
Galleria artificiale e concio d'attacco	
Coord. geografiche	Lat. 46.63442 Long. 11.56157
T_R (-)	1068
a_g/g (-)	0.065
F_0 (-)	2.671
Categoria sottosuolo	B
S_S (-)	1.2
Categoria topografica	T2
S_T (-)	1.2
a_{max}/g (-)	0.0936

Tab. 3 - Parametri per la definizione dell'accelerazione sismica

5. CARATTERISTICHE DEI MATERIALI STRUTTURALI

Si riportano di seguito le principali caratteristiche dei diversi materiali impiegati nelle opere in progetto, con l'indicazione dei valori di resistenza e deformabilità adottati nelle verifiche, nel rispetto delle indicazioni del DM 14/01/2008.

5.1 GALLERIA ARTIFICIALE

Calcestruzzo – Calotta e Piedritti	
Classe di resistenza del calcestruzzo	C 25/30
Classe di esposizione ambientale	XC2
Resistenza a compressione a 28 giorni di calcolo	$f_{cd} = 0.85\ f_{ck}/1.5 = 14.16$ MPa
Sforzo massimo di compressione in esercizio	$0.60f_{ck} = 15.00$ MPa combinaz. caratteristica (rara) $0.45f_{ck} = 11.25$ MPa combinaz. quasi permanente
Modulo elastico medio a 28 giorni	$E_{cm} = 22000(f_{cm}/10)^{0.3} = 31447$ MPa

Tab. 4 - Proprietà del calcestruzzo per la calotta

Calcestruzzo – Arco rovescio e Murette	
Classe di resistenza del calcestruzzo	C 30/37
Classe di esposizione ambientale	XA1
Resistenza a compressione a 28 giorni di calcolo	$f_{cd} = 0.85\ f_{ck}/1.5 = 17.4$ MPa
Sforzo massimo di compressione in esercizio	$0.60f_{ck} = 18.00$ MPa combinaz. caratteristica (rara) $0.45f_{ck} = 13.50$ MPa combinaz. quasi permanente
Modulo elastico medio a 28 giorni	$E_{cm} = 22000(f_{cm}/10)^{0.3} = 33019$ MPa

Tab. 5 - Proprietà del calcestruzzo per l'arco rovescio

Acciaio per barre di armatura	
Tipo	B 450 C
Resistenza di progetto	$f_{yd} = f_{yk}/\gamma_s = 450/1.15 = 391.3$ MPa
Tensione massima in condizioni di esercizio	$\sigma_{lim} = 0.80\ f_{yk} = 360.0$ MPa
Verifica indiretta per il controllo della fessurazione	tabelle C4.1.II e C4.1.III della Circolare 617 /09

Tab. 6 - Proprietà dell'acciaio per le barre di armatura

5.2 CONCIO DI ATTACCO

Calcestruzzo – Rivestimento definitivo	
Classe di resistenza del calcestruzzo	C 25/30
Classe di esposizione ambientale	XC2
Resistenza a compressione a 28 giorni di calcolo	$f_{cd} = 0.85\ f_{ck}/1.5 = 14.16$ MPa
Sforzo massimo di compressione in esercizio	$0.60f_{ck} = 15.00$ MPa combinaz. caratteristica (rara) $0.45f_{ck} = 11.25$ MPa combinaz. quasi permanente
Modulo elastico medio a 28 giorni	$E_{cm} = 22000(f_{cm}/10)^{0.3} = 31447$ MPa

Tab. 7 - Proprietà del calcestruzzo per il rivestimento definitivo

Acciaio per barre di armatura	
Tipo	B 450 C
Resistenza di progetto	$f_{yd} = f_{yk}/\gamma_s = 450/1.15 = 391.3$ MPa
Tensione massima in condizioni di esercizio	$\sigma_{lim} = 0.80\ f_{yk} = 360.0$ MPa
Verifica indiretta per il controllo della fessurazione	tabelle C4.1.II e C4.1.III della Circolare 617 /09

Tab. 8 - Proprietà dell'acciaio per le barre di armatura

Acciaio per centine	
Tipo	S 275 JR
Tensione di snervamento caratteristica	$f_{yk} \geq 275$ MPa
Tensione di rottura caratteristica	$f_{tk} \geq 430$ MPa
Tensione di snervamento di calcolo	$f_{yd} = 275/1.05 = 261.9$ MPa
Modulo elastico di calcolo	$E_d = 210000$MPa

Tab. 9 – Proprietà dell'acciaio per le centine

Calcestruzzo proiettato (spritz beton)	
Classe di resistenza del calcestruzzo	C 25/30
Resistenza a compressione a 28 giorni di calcolo	$f_{cd} = 0.85\ f_{ck}/1.5 = 14.16$ MPa
Modulo elastico medio a 28 giorni	$E_{cm} = 22000(f_{cm}/10)^{0.3} = 31447$ MPa
Classe minima di sviluppo della resistenza minima a compressione a breve termine	J2
Curva granulometrica degli aggregati di tipo continuo con diametro massimo di	10mm
Classe di consistenza	S5
Classe di assorbimento energetica minima	E700

Tab. 10 - Proprietà del calcestruzzo proiettato (spritz-beton)

Colonne di jet grouting	
Resistenza a compressione a 28 giorni di calcolo	$\sigma_c = 2.0$ MPa
Modulo elastico medio a 28 giorni	E = 700 MPa

Tab. 11 - Proprietà delle colonne di jet grouting

Infilaggi	
Tipo	S 275 JR
Tensione di snervamento caratteristica	$f_{yk} \geq 275$ MPa
Tensione di rottura caratteristica	$f_{tk} \geq 430$ MPa
Tensione di snervamento di calcolo	$f_{yd} = 275/1.05 = 261.9$ MPa
Modulo elastico di calcolo	$E_d = 210000$MPa

Tab. 12 – Proprietà degli infilaggi

6. VERIFICHE ESEGUITE

Di seguito viene presentato l'elenco delle azioni considerate nel calcolo, delle verifiche effettuate e degli approcci progettuali adottati, in accordo alle disposizioni del DM 14.01.2008 e al manuale di progettazione RFI delle opere civili.

6.1 GALLERIA ARTIFICIALE

6.1.1 Azioni

Per le gallerie artificiali si individuano le seguenti azioni:

- azioni permanenti strutturali: peso proprio della struttura (P.P), spinte del terreno sui fianchi della galleria (SPsx e SPdx), carico verticale P.cop (rappresentato dal terreno di ricoprimento);
- azioni variabili: carico variabile Q_1 pari a 20 kN/m^2 (legato ai mezzi di cantiere), spinte sui fianchi della galleria (SQ_{1sx} e SQ_{1dx}) generate dal carico Q_1;
- azione sismica: i carichi considerati sono: l'incremento di spinta del terreno sui fianchi della galleria (± ΔSh), la variazione del peso del terreno di ritombamento (± ΔSv), gli effetti inerziali della struttura della galleria nelle direzioni orizzontale e verticale (Ih e Iv). L'accelerazione orizzontale massima attesa al suolo è definita al § 4.5; la definizione dei coefficienti sismici è riportata al § 6.1.3; l'effetto del sisma sulle strutture è valutato al § 7.2.1.

Sulla base della definizione dei carichi di cui sopra, in accordo a quanto prescritto dal DM 14/01/2008, sono state individuate le combinazioni di carico per le verifiche di stati limite ultimi e di esercizio in condizioni statiche e in condizioni sismiche:

- combinazione fondamentale (SLU);
- combinazione caratteristica (SLE): il coefficiente di combinazione per il carico variabile Q_1 è pari a 1;
- combinazione frequente (SLE): il coefficiente di combinazione per il carico variabile Q_1 è pari a 0.8;
- combinazione quasi permanente (SLE): il coefficiente di combinazione per il carico variabile Q1 è pari a 0;
- combinazione sismica (SLV, SLD): il coefficiente di combinazione per il carico variabile Q1 è pari a 0.2.

6.1.1.1. Azioni sismiche

Per la verifica agli stati limite in condizioni sismiche (SLV e SLD) si è adottato il metodo pseudostatico, calcolando i coefficienti sismici orizzontale e verticale in analogia con quanto indicato dalla normativa (DM 14/1/2008) per i muri di sostegno:

$$k_h = \beta_m \cdot \left(\frac{a_{max}}{g}\right)$$

$$k_v = \pm\frac{1}{2} \cdot k_h$$

dove:

a_{max} è l'accelerazione orizzontale massima attesa al sito;

β_m è il coefficiente di riduzione dell'accelerazione massima assunto pari a 1.

I coefficienti di spinta attiva per il calcolo dell'incremento di spinta sui fianchi della galleria sono stati determinati attraverso la relazione di Wood, come riportato al § 7.2.1.

6.1.2 Verifiche in condizioni statiche

Le verifiche delle gallerie artificiali sono state condotte nei riguardi dei seguenti stati limite:

- stati limite ultimi (SLU):
  - instabilità globale dell'insieme terreno-opera;
  - raggiungimento della resistenza strutturale
- stati limite di esercizio in condizioni statiche (SLE):
  - controllo dello stato tensionale e fessurativo degli elementi strutturali.

Nei prospetti da Tab. 14 a Tab. 16si riporta un riepilogo degli approcci seguiti per le verifiche SLU e SLE eseguite e dei coefficienti parziali di normativa adottati.

Opera	Carico	SLU						
		SLU-1	SLU-2	SLU-3	SLU-4	SLU-5	SLU-6	SLU-7
Galleria artificiale	P.P.	1.3	1.3	1.0	1.3	1.0	1.3	1.0
	P.cop	1.3	1.3	1.0	1.3	1.0	1.3	1.0
	SP.sx	1.3	1.0	1.3	1.3	1.3	1.0	1.0
	SP.dx	1.3	1.0	1.3	1.0	1.0	1.3	1.3
	Q_1	1.5	1.5	0.0	1.5	0.0	1.5	0.0
	SQ_1sx	1.5	0.0	1.5	1.5	1.5	0.0	0.0
	SQ_1dx	1.5	0.0	1.5	0.0	0.0	1.5	1.5

Tab. 13 - Coefficienti di combinazione e combinazioni di calcolo (SLU) – Galleria artificiale

Opera	SLE-C		SLE-F				SLE-QP	
	Carico	SLE-C	Carico	SLE-F-1	SLE-F-2	SLE-F-3	Carico	SLE-QP
Galleria artificiale	P.P.	1.0	P.P.	1.0	1.0	1.0	P.P.	1.0
	P.cop	1.0	P.cop	1.0	1.0	1.0	P.cop	1.0
	SP.sx	1.0	SP.sx	1.0	1.0	1.0	SP.sx	1.0
	SP.dx	1.0	SP.dx	1.0	1.0	1.0	SP.dx	1.0
	Q_1	1.0	V	0.8	0.0	0.0	Q_1	0.0
	SQ_1sx	1.0	SQ_1sx	0.0	0.8	0.0	SQ_1sx	0.0
	SQ_1dx	1.0	SQ_1dx	0.0	0.0	0.8	SQ_1dx	0.0

Tab. 14 - Coefficienti di combinazione e combinazioni di calcolo (SLE) – Galleria artificiale

CARICHI	COEFFICIENTE PARZIALE A1	COEFFICIENTE PARZIALE A2
Permanente sfavorevole	γ_G =1,30	γ_G =1,00
Permanente favorevole	γ_G =1,00	γ_G =1,00
Variabile sfavorevole	γ_G =1,50	γ_G =1,30
Variabile favorevole	γ_G =0,00	γ_G =0,00

Tab. 15 - Coefficienti parziali per le azioni o per l'effetto delle azioni (SLU) – Galleria artificiale

PARAMETRO	COEFFICIENTE PARZIALE M1	COEFFICIENTE PARZIALE M2
Tangente dell'angolo di resistenza al taglio tan ϕ'_k	$\gamma_{\phi'}$=1,00	$\gamma_{\phi'}$=1,25
Coesione efficace c'_k	$\gamma_{c'}$=1,00	$\gamma_{c'}$=1,25
Resistenza non drenata c_{uk}	γ_{Cu}=1,00	γ_{Cu}=1,40
Peso dell'unità di volume γ	γ_γ=1,00	γ_γ=1,00

Tab. 16 - Coefficienti parziali per i parametri geotecnici del terreno (SLU) – Galleria artificiale

6.1.3 Verifiche in condizioni sismiche

Le verifiche in condizioni sismiche sono state condotte con riferimento allo stato limite ultimo di salvaguardia della vita (SLV) e allo stato limite di danno (SLD). Per tali verifiche i coefficienti parziali sulle azioni sono pari all'unità.

Nei prospetti che seguono sono riportate le combinazioni sismiche (SLV) ritenute più gravose e adottate nelle analisi numeriche della galleria artificiale ai fini delle verifiche strutturale del rivestimento: in Tab. 17 e

Tab. 18 e si riporta un riepilogo degli approcci seguiti per le verifiche SLV di ciascuna parte d'opera; in Tab. 19 e Tab. 20 sono riepilogati i coefficienti parziali di normativa utilizzati.

Opera	Carico	SLV							
		SLV-1	SLV-2	SLV-3	SLV-4	SLV-5	SLV-6	SLV-7	SLV-8
Galleria artificiale	P.P.	1.0	1.0	1.0	1.0	1.0	1.0	1.0	1.0
	P.cop	1.0	1.0	1.0	1.0	1.0	1.0	1.0	1.0
	$SP_{.sx}$	1.0	1.0	1.0	1.0	1.0	1.0	1.0	1.0
	$SP_{.dx}$	1.0	1.0	1.0	1.0	1.0	1.0	1.0	1.0
	Q_1	0.2	0.2	0.2	0.2	0.2	0.2	0.2	0.2
	$SQ_{1.sx}$	0.2	0.2	0.2	0.2	0.2	0.2	0.2	0.2
	$SQ_{1.dx}$	0.2	0.2	0.2	0.2	0.2	0.2	0.2	0.2
	$\Delta S_{.h}$	1.0	-1.0	1.0	-1.0	0.3	-0.3	0.3	-0.3
	$\Delta S_{.v}$	-0.3	-0.3	0.3	0.3	-1.0	-1.0	1.0	1.0
	$I_{.h}$	1.0	-1.0	1.0	-1.0	0.3	-0.3	0.3	-0.3
	$I_{.v}$	-0.3	-0.3	0.3	0.3	-1.0	-1.0	1.0	1.0

Tab. 17 - Coefficienti di combinazione e combinazioni di calcolo (SLV) – Galleria artificiale (parte 1/2)

Opera	Carico	SLV							
		SLV-9	SLV-10	SLV-11	SLV-12	SLV-13	SLV-14	SLV-15	SLV-16
Galleria artificiale	P.P.	1.0	1.0	1.0	1.0	1.0	1.0	1.0	1.0
	P.cop	1.0	1.0	1.0	1.0	1.0	1.0	1.0	1.0
	$SP_{.sx}$	1.0	1.0	1.0	1.0	1.0	1.0	1.0	1.0
	$SP_{.dx}$	1.0	1.0	1.0	1.0	1.0	1.0	1.0	1.0
	Q_1	0.2	0.2	0.2	0.2	0.2	0.2	0.2	0.2
	$SQ_{1.sx}$	0.2	0.2	0.2	0.2	0.2	0.2	0.2	0.2
	$SQ_{1.dx}$	0.2	0.2	0.2	0.2	0.2	0.2	0.2	0.2
	$\Delta S_{.h}$	1.0	-1.0	1.0	-1.0	0.3	-0.3	0.3	-0.3
	$\Delta S_{.v}$	-0.3	-0.3	0.3	0.3	-1.0	-1.0	1.0	1.0
	$I_{.h}$	-1.0	1.0	-1.0	1.0	-0.3	0.3	-0.3	0.3
	$I_{.v}$	0.3	0.3	-0.3	-0.3	1.0	1.0	-1.0	-1.0

Tab. 18 - Coefficienti di combinazione e combinazioni di calcolo (SLV) – Galleria artificiale (parte21/2)

CARICHI	COEFFICIENTE PARZIALE A1	COEFFICIENTE PARZIALE A2
Permanente sfavorevole	γ_G =1,00	γ_G =1,00
Permanente favorevole	γ_G =1,00	γ_G =1,00
Variabile sfavorevole	γ_G =1,00	γ_G =1,00
Variabile favorevole	γ_G =0,00	γ_G =0,00

Tab. 19 - Coefficienti parziali per le azioni o per l'effetto delle azioni (SLV) – Gallerie artificiali

PARAMETRO	COEFFICIENTE PARZIALE M1	COEFFICIENTE PARZIALE M2
Tangente dell'angolo di resistenza al taglio tan ϕ'_k	$\gamma_{\phi'}$=1,00	$\gamma_{\phi'}$=1,25
Coesione efficace c'_k	$\gamma_{c'}$=1,00	$\gamma_{c'}$=1,25
Resistenza non drenata c_{uk}	γ_{Cu}=1,00	γ_{Cu}=1,40
Peso dell'unità di volume γ	γ_γ=1,00	γ_γ=1,00

Tab. 20 - Coefficienti parziali per i parametri geotecnici del terreno (SLV) – Gallerie artificiali

7. METODOLOGIE DI ANALISI

7.1 ANALISI DELL'INTERAZIONE TERRENO-STRUTTURA

7.1.1 Galleria artificiale

Per il calcolo delle sollecitazioni si è adottato il metodo delle reazioni iperstatiche attraverso una modellazione numerica ad elementi finiti monodimensionali. Si è utilizzato il codice di calcolo SAP2000 (versione 23.3.1).

Si considera una sezione di galleria di lunghezza unitaria definendo per la struttura un modello costituito da conci monodimensionali (elementi beam). Gli spessori delle diverse aste sono variabili secondo l'elemento strutturale considerato (calotta, piedritto, arco rovescio). L'interazione tra il terreno e la struttura è simulata attraverso un vincolo elastico (molle) assegnato ai vari elementi "frame", lungo il loro sviluppo. Il vincolo è di tipo non lineare in quanto rappresenta la capacità del terreno di dare una reazione solo se soggetto a compressione, la rigidezza di tali supporti è calcolata secondo le seguenti formulazioni:

$$k = \frac{E'}{R_{eq} \cdot (1+\nu)} \qquad (per\ i\ tratti\ curvilinei\ dell'arco\ di\ calotta)$$

$$k = \frac{E'}{B \cdot (1-\nu^2)} \qquad (per\ tratti\ rettilinei\ dell'arco\ di\ calotta)$$

$$k = \frac{E'}{B \cdot (1-\nu^2) \cdot c_t} \qquad (per\ l'arco\ rovescio)$$

dove, con riferimento alla geometria della linea d'asse modellata:

- R_{eq} raggio di curvatura del tratto di carpenteria curvilineo considerato;
- B lunghezza del tratto rettilineo di carpenteria; per l'arco rovescio è pari alla dimensione trasversale totale (trascurandone la curvatura);
- ν ed E' sono il coefficiente di Poisson ed il modulo elastico del mezzo al contorno rispettivamente;
- c_t coefficiente di forma della fondazione ottenuto attraverso le relazioni proposte da Bowles (1960) (L = lato maggiore della fondazione):

$c_t = 0.853 + 0.534 \cdot \ln(L/B)$ fondazione rettangolare con $(L/B) \leq 10$;

$c_t = 2 + 0.0089 \cdot (L/B)$ fondazione rettangolare con $(L/B) > 10$.

7.1.2 Concio di attacco

L'interazione opera-terreno è stata valutata mediante una analisi FDM (Finite Difference Method), utilizzando il codice di calcolo bidimensionale FLAC 8.0 (Fast Lagrangian Analysis of Continua).

Tale codice permette di analizzare problemi di meccanica del continuo, determinando gli stati tensionali e deformativi, in campo bidimensionale o assialsimmetrico, in equilibrio con le azioni esterne e gravitative applicate e compatibilmente con le leggi costitutive adottate per i materiali, ricorrendo al metodo delle

differenze finite, sia in campo statico che dinamico. Le analisi possono essere inoltre condotte in condizioni di flusso idraulico, in modalità accoppiata o con pressioni neutre preventivamente fissate.

Nell'ambito delle analisi condotte per le gallerie in esame, sono state adottate leggi costitutive di tipo elastico lineare per le strutture e leggi elasto-plastiche con il criterio di resistenza "Mohr – Coulomb" per le zone di terreno naturale.

Il comportamento del sistema opera-terreno è stato analizzato nelle diverse fasi costruttive fino alla configurazione finale e in condizioni di esercizio. Le analisi sono mirate alla previsione del comportamento deformativo al contorno dello scavo e dei carichi attesi sui sostegni provvisori e sui rivestimenti definitivi. Le analisi consentono, pertanto, di verificare:

- stati limite ultimi per raggiungimento della resistenza del terreno/ammasso roccioso interessato dallo scavo (stato limite ultimo di tipo GEO), con lo sviluppo di fenomeni di instabilità del fronte o di deformazioni e spostamenti elevati al contorno;
- stati limite ultimi relativi al raggiungimento delle resistenze degli elementi strutturali che costituiscono gli interventi di stabilizzazione, del rivestimento di prima fase e del rivestimento definitivo (stato limite ultimo di tipo STR);
- stati limite di esercizio per il rivestimento definitivo.

Per le verifiche di stati limite ultimi STR, le analisi di interazione opera – terreno sono state condotte con i valori caratteristici delle azioni e dei parametri geotecnici, applicando i coefficienti parziali all'effetto delle azioni, adottando l'Approccio 1- Combinazione 1, con R1 =1. Pertanto, con la combinazione dei carichi fondamentale si è proceduto secondo questo schema:

- verifiche SLU interventi di stabilizzazione: γ_E = 1,3 applicato alle caratteristiche delle sollecitazioni N, M, T;
- verifiche SLU rivestimento di prima fase: γ_E = 1,3 applicato alle caratteristiche delle sollecitazioni N, M, T;
- verifiche SLU rivestimento definitivo: γ_E = 1,3 applicato alle caratteristiche delle sollecitazioni N, M, T.

Per la verifica degli stati limite di esercizio (SLE) del rivestimento definitivo in calcestruzzo armato, le analisi numeriche sono state condotte con i valori caratteristici delle azioni e dei parametri geotecnici, adottando le pertinenti combinazioni dei carichi per la verifica di fessurazione e la verifica delle tensioni di esercizio, secondo quanto previsto dal DM 14/01/2008 e Circolare n.617.

I rivestimenti di prima fase e definitivi, sono stati simulati utilizzando elementi tipo "liner", aventi modello costitutivo elastico lineare.

Nelle analisi di interazione con modelli numerici bidimensionali l'effetto dei consolidamenti del fronte di scavo viene tenuto in conto in modo indiretto, nella definizione della percentuale di rilascio delle forze di scavo in corrispondenza del fronte.

Per gli interventi di precontenimento al contorno l'effetto dei consolidamenti viene tenuto in conto direttamente nei modelli numerici e simulato come un arco di materiale al contorno dello scavo avente proprietà meccaniche migliori rispetto a quelle iniziali del terreno. In particolare, nella regione consolidata sono incrementati i valori di coesione e di modulo elastico, mantenendo immutato l'angolo d'attrito del materiale naturale.

Detta $p_{v,k}$ la pressione verticale caratteristica attesa in corrispondenza della calotta, e detto l'interasse tra i tubi, il momento flettente caratteristico agente sul singolo elemento può calcolarsi come:

$$M_{sk} = \frac{1}{12} \cdot p_{v,k} \cdot i \cdot L^2$$

In questo caso le verifiche sono condotte secondo l'Approccio 1 - Combinazione 1 (A1+M1+R1), con R1=1.

7.2 ANALISI IN CONDIZIONI SISMICHE

7.2.1 Galleria artificiale

L'accelerazione orizzontale massima attesa al suolo è definita nel § 6.1.1.1.

L'effetto del sisma è stato tenuto in conto attraverso il metodo pseudostatico. L'azione sismica è stata simulata considerando gli effetti inerziali indotti da entrambe le componenti (orizzontale e verticale) del moto sismico sui carichi. I carichi considerati sono i seguenti:

- incremento di spinta del terreno sui fianchi della galleria ($\pm\Delta S_h$), valutato secondo la teoria di Wood, per cui la risultante dell'azione sismica orizzontale può calcolarsi con la seguente formula:

$$\Delta S_h = \left(\frac{a_{max}}{g}\right) \cdot \gamma \cdot H^2$$

- variazione del peso del terreno di ritombamento ($\pm\Delta S_v$), valutato secondo la teoria di Wood, per cui la risultante dell'azione sismica orizzontale può calcolarsi con la seguente formula:

$$\Delta S_v = 0.5 \cdot \left(\frac{a_{max}}{g}\right) \cdot \gamma \cdot H^2$$

- effetti inerziali della struttura della galleria nella direzione orizzontale (I_h), applicando un carico gravitazionale con direzione X e accelerazione pari a:

$$k_h = \beta_m \cdot \left(\frac{a_{max}}{g}\right)$$

  dove β = 1 per strutture non in grado di subire spostamenti relativi rispetto al terreno

- effetti inerziali della struttura della galleria nella direzione verticale (Iv), applicando un carico gravitazionale con direzione Z e accelerazione pari a:

$$k_v = \pm 0.5 \cdot k_h$$

dove β = 1 per strutture non in grado di subire spostamenti relativi rispetto al terreno

Il programma provvede automaticamente ad associare delle forze aggiuntive in direzione Z in funzione delle masse strutturali.

7.2.2 Concio d'attacco

Per la valutazione delle sollecitazioni sismiche agenti sui rivestimenti definitivi della galleria si è fatto riferimento alla teoria dell'ovalizzazione.

L'effetto della distorsione per ovalizzazione si verifica quando le onde di taglio dovute all'azione sismica si propagano in direzione normale o quasi normale all'asse della galleria, con conseguente effetto di distorsione della sezione trasversale della galleria stessa (Fig. 3). Il comportamento del rivestimento della galleria può essere simulato come quello di una struttura immersa in un mezzo in condizioni di deformazioni piane.

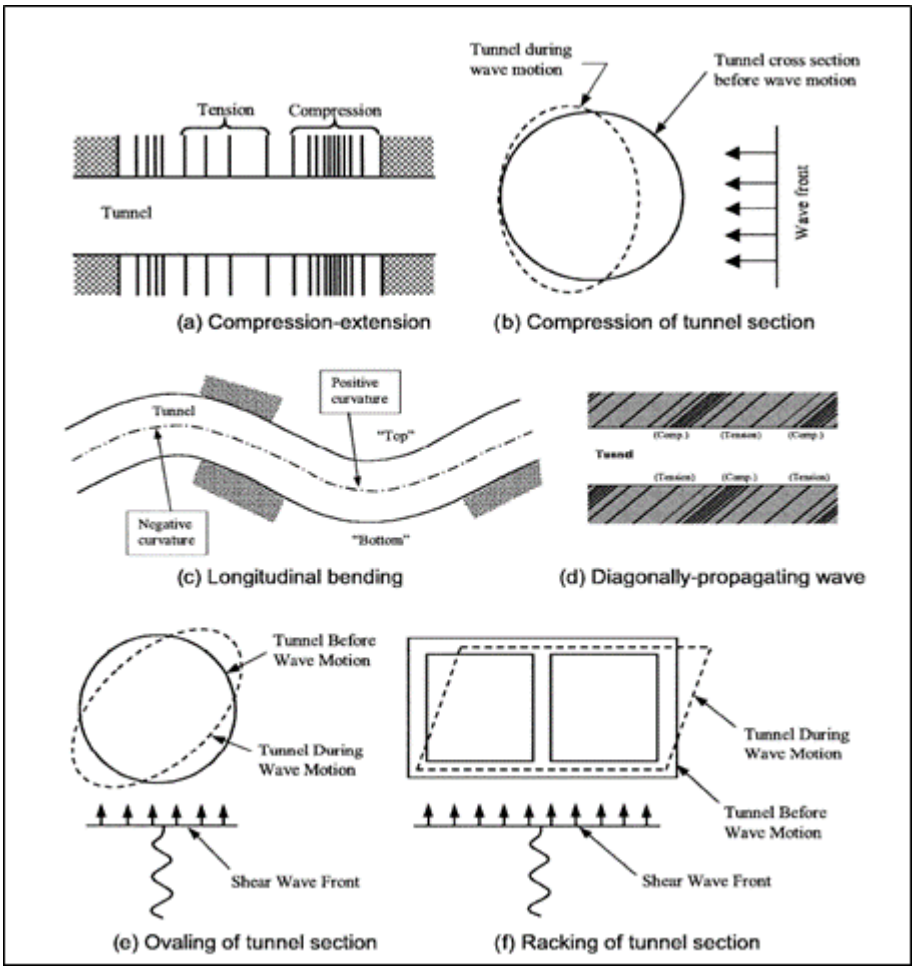

Fig. 3 – Effetto dell'ovalizzazione su una galleria dovuto all'evento sismico

La sollecitazione dinamica è pertanto una condizione di carico aggiuntiva a quello statico agente sul rivestimento da cui possono verificarsi differenti condizioni critiche (Owen and Scholl, 1981):

- le sollecitazioni dinamiche di compressione aggiunte alle sollecitazioni statiche di compressione possono superare localmente la capacità di compressione del rivestimento;
- le sollecitazioni dinamiche di trazione sottratte dalle sollecitazioni statiche di compressione riducono la capacità di momento del rivestimento. Talvolta tali sollecitazioni risultanti possono essere di trazione.

Le soluzioni analitiche a cui si fa riferimento per valutare l'interazione terreno-struttura si basano sulle seguenti assunzioni:

- mezzo infinito, elastico, omogeneo ed isotropo;
- rivestimento considerato come un mezzo elastico.

Le formulazioni per la definizione degli incrementi di sollecitazione dovuti all'evento sismico sono valutabili sia in condizioni di "full-slip", sia in condizioni di "no-slip". Nel nostro caso, vista la presenza dell'impermeabilizzazione posta tra rivestimento definitivo e rivestimento di prima fase è lecito utilizzare le formulazioni relative alla condizione "full-slip".

Gli incrementi di sollecitazione dovuti al sisma sono calcolati con le seguenti formulazioni (Penzien e Wu, 1998 e Penzien, 2000):

$$\Delta d^n{}_{lining} = R^n \Delta d_{free-field} = R^n \frac{d}{2}\gamma_{\max}$$

$$T_{\max} = \pm\frac{12E_l I\Delta d^n{}_{lining}}{d^3(1-\nu_l{}^2)} = \pm\frac{6E_l IR^n\gamma_{\max}}{d^2(1-\nu_l{}^2)}$$

$$M_{\max} = \pm\frac{6E_l I\Delta d^n{}_{lining}}{d^2(1-\nu_l{}^2)} = \pm\frac{3E_l IR^n\gamma_{\max}}{d(1-\nu_l{}^2)}$$

$$V_{\max} = \pm\frac{24E_l I\Delta d^n{}_{lining}}{d^3(1-\nu_l{}^2)} = \pm\frac{12E_l IR^n\gamma_{\max}}{d^2(1-\nu_l{}^2)}$$

$$R^n = \pm\frac{4(1-\nu_m)}{(\alpha^n+1)}$$

$$\alpha^n = \frac{12E_l I(5-6\nu_m)}{d^3 G_m(1-\nu_l^2)}$$

In cui:

T_{max} è l'incremento di sforzo normale al rivestimento

M_{max} è l'incremento di momento flettente sul rivestimento

V_{max} è l'incremento di taglio sul rivestimento

γ_{max} è il valore della deformazione massima a taglio in condizioni di campo libero

E_l , I e υ_l sono, rispettivamente, il modulo elastico del rivestimento, il momento di inerzia e il coefficiente di Poisson

$\Delta^d n$ è lo sforzo diametrale agente sul rivestimento

G_m , e υ_m sono il modulo di taglio a piccole deformazioni e il coefficiente di Poisson dell'ammasso

Per la definizione della deformazione massima a taglio in condizioni di campo libero si è fatto riferimento alle tabelle di Power et al. (1996), riportate in Fig. 4 e in Fig. 5

Ratios of peak ground velocity to peak ground acceleration at surface in rock and soil (after Power et al., 1996)

Moment magnitude (M_w)	Ratio of peak ground velocity (cm/s) to peak ground acceleration (g)		
	Source-to-site distance (km)		
	0–20	20–50	50–100
Rock[a]			
6.5	66	76	86
7.5	97	109	97
8.5	127	140	152
Stiff soil[a]			
6.5	94	102	109
7.5	140	127	155
8.5	180	188	193
Soft soil[a]			
6.5	140	132	142
7.5	208	165	201
8.5	269	244	251

[a]In this table, the sediment types represent the following shear wave velocity ranges: rock ≥ 750 m/s; stiff soil is 200–750 m/s; and soft soil < 200 m/s. The relationship between peak ground velocity and peak ground acceleration is less certain in soft soils.

Fig. 4 – Definizione del rapporto velocità/accelerazione di picco

Ratios of ground motion at depth to motion at ground surface (after Power et al., 1996)

Tunnel depth (m)	Ratio of ground motion at tunnel depth to motion at ground surface
≤ 6	1.0
6–15	0.9
15–30	0.8
> 30	0.7

Fig. 5 – Definizione del coefficiente di moto sismico ad una specifica quota z

Si è pertanto ipotizzato, per la prima tabella, una magnitudo momento pari a 6.5 ed una distanza sito-sorgente compresa tra 0 e 20 km, in condizioni di "stiff soil".

Nella seconda tabella, invece, è stato possibile definire il coefficiente di moto sismico per il concio di attacco, che avendo una copertura inferiore ai 6m è pari a 1.0.

La massima deformazione di taglio risulta pari a γ_{max} = 8.04E-5 così come riportato nella tabella seguente.

$$\gamma_{max} = \frac{V_s}{C_s}$$

Distanza sito - sorgente	D	[km]	30
Magnitudo di momento	M	[-]	6.5
Categoria sottosuolo NTC 2008		[-]	B
Coefficiente di amplificazione stratigrafica	Ss	[-]	1.2
Accelerazione di progetto	ag	[g]	0.065
Accelerazione di picco al bedrock	amax,b	[g]	0.065
Accelerazione di picco in superficie	amax,s	[g]	0.078
Velocità propagazione onde di taglio	Cs	[m/s]	872
Rapporto velocità/accelerazione picco	$V_s/a_{max,s}$	94	[-]
Velocità di picco al suolo Vs	V_s	0.073	[m/s]
Coefficiente moto sismico a quota z	C	1	[-]
Velocità di picco alla profondità z	$V_{s,z}$	0.073	[m/s]
Massima deformazione di taglio	γ_{ffmax}	8.40E-05	[-]

Tab. 21 – Definizione della massima deformazione di taglio

Gli incrementi di sollecitazione ottenuti sono riportati nella seguente tabella:

	Tmax [kN/m]	**Mmax [kNm/m]**	**Vmax [kN/m]**
Sezione media	± 35.90	183.09	71.80
Sezione minima	± 4.72	24.08	9.44

Tab. 22 – Incrementi di sollecitazione sismica

8. GALLERIA ARTIFICIALE – SEZIONE DI CALCOLO

La galleria artificiale è stata verificata nelle condizioni di massima altezza di ritombamento intorno alla pk 0+016.14. L'altezza di ritombamento ha un valore massimo pari a circa 3.0 m. La sezione ritombata ha una geometria di rinterro pressoché simmetrica.

Di seguito è fornita una descrizione delle principali caratteristiche geometriche e uno schema del modello di calcolo.

8.1 CARATTERISTICHE GEOMETRICHE DELLA STRUTTURA

La carpenteria della galleria artificiale ha sezione interna di tipo policentrico; l'arco rovescio ha uno spessore pari a 90 cm con raggio di curvatura interno pari a 8.00 metri, la calotta ha sezione minima pari a 80 cm e sezione massima pari a circa 1.60 m, con raggio di curvatura interno pari a 3.45 m. I piedritti hanno sezione minima pari a 1.00 m e sezione massima pari a circa 1.60 m. La galleria artificiale ha uno sviluppo longitudinale pari a 16.1 m (compreso il portale con taglio a "becco di flauto"). Il rinfianco e il ritombamento al di sopra della calotta della galleria artificiale verranno realizzati con materiali provenienti dallo scavo; verranno utilizzate le filladi alterate presenti in sito, rimodellate lungo le scarpate di progetto.

Lo spessore massimo di ricoprimento al di sopra della calotta è pari a 3.0 metri e corrisponderà ad una riprofilatura dell'area equivalente alla situazione "ante operam".

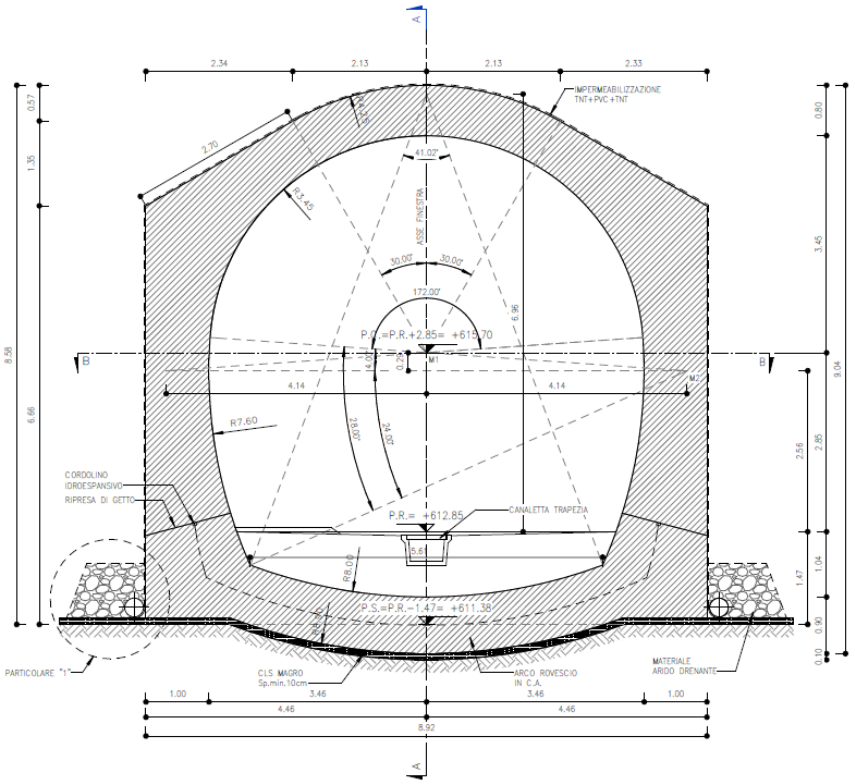

Fig. 6 - Galleria Artificiale – Sezione di calcolo

8.2 MODELLO DI CALCOLO E AZIONI APPLICATE

La geometria della galleria artificiale è riportata in Fig. 6; in Fig. 7 si riporta lo schema del modello di calcolo agli elementi finiti adottato.

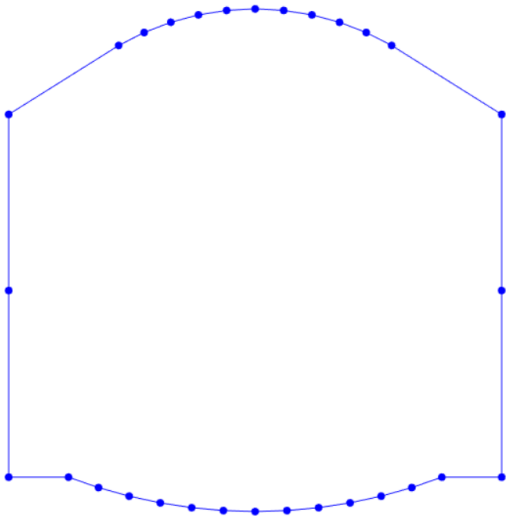

Fig. 7 - Galleria Artificiale – Modello di calcolo agli elementi finiti

Agli elementi di intersezione tra ritti e arco rovescio è stata assegnata una sezione con maggiore rigidezza, sia flessionale che di taglio; in tali elementi non si leggeranno le sollecitazioni in quanto non significative.

Per simulare l'interazione tra terreno e struttura sono state assegnate delle molle calcolate come descritto nel seguito. Le molle sono state calcolate con la seguente formulazione di cui al § 7.1.1.

Per il calcolo della rigidezza delle molle dei piedritti e della calotta si simula la presenza del materiale di ritombamento e non del terreno in sito, il modulo assunto è quindi pari a 40 MPa.

Nella seguente tabella sono riepilogate le caratteristiche principali del modello di calcolo e il valore delle molle.

GALLERIA ARTIFICIALE – CARATTERISTICHE DEL MODELLO DI CALCOLO	
Altezza simulata dell'opera	H_{tot} = 8.10 m
Larghezza simulata dell'opera	L_{tot} = 7.95 m
Spessori simulati del rivestimento	
Calotta	0.80 m / 0.80÷1.60 m
Arco rovescio	0.90 m
Piedritti	1.60÷1.00 m / 1.00÷1.60 m
Rigidezza delle molle al contorno	
Calotta	8205 kN/m/m (tratto curvilineo) – 18239 kN/m/m (tratto rettilineo)
Arco rovescio	6171 kN/m/m
Piedritti	7618 kN/m/m

Tab. 23 - Galleria Artificiale: caratteristiche del modello di calcolo

Riprendendo quanto già descritto al § 6.1.1, vengono di seguito elencati i carichi elementari applicati al modello di calcolo.

8.2.1 Azioni permanenti strutturali

Le azioni permanenti applicate sono le seguenti:

- peso proprio della struttura (*P.P. peso proprio*) valutato in automatico dal programma di calcolo
- carico verticale rappresentato dal terreno di ricoprimento (*P.cop perm cop*)

  $P_{copertura} = \gamma \cdot H_{ritombamento} = 20\,kN/\mathrm{m}^3 \cdot (3.0m \div 4.9m) = 60\,kN/\mathrm{m}^2 \div 98\,kN/\mathrm{m}^2$

  l'azione applicata è rappresentata in Fig. 8;
- spinte del terreno sui fianchi della galleria (*SPsx spinta terra perm e SPdx spinta terra perm*); valutata utilizzando il peso specifico del terreno di ritombamento pari a 20 kN/m^3 e l'angolo di attrito del terreno ϕ pari a 35°. Ne consegue un valore di coefficiente di spinta a riposo k_0 pari a 0.426; l'azione applicata è rappresentata in Fig. 9.

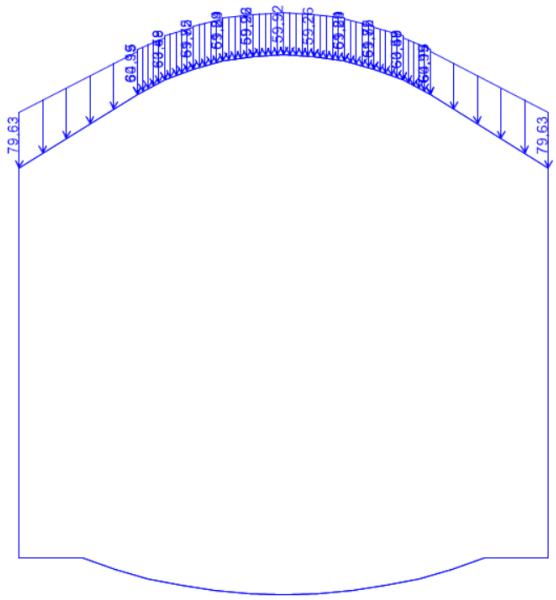

Fig. 8 - Galleria artificiale – Carico permanente in copertura

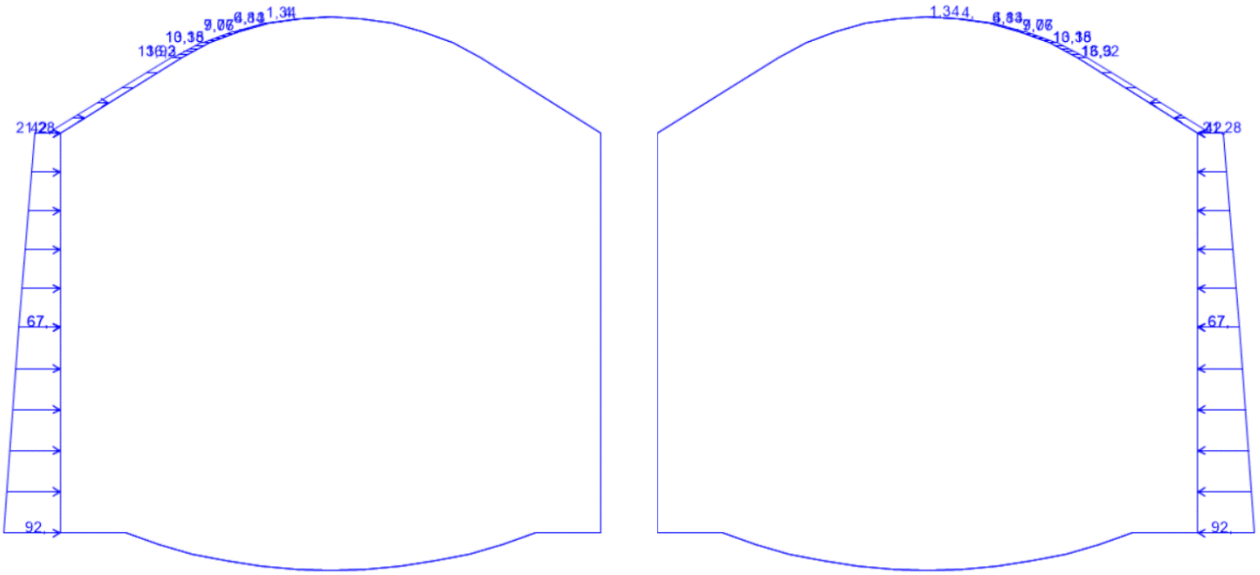

Fig. 9 - Galleria artificiale – Spinte del terreno

8.2.2 Azioni variabili

Le azioni permanenti applicate sono le seguenti:

- carico variabile (*Q_1 variabile*) legato ai mezzi di cantiere pari a 20 kN/m^2; il carico applicato è rappresentato in Fig. 10;
- sovraccarico laterale (*SQ1.sx spinta var e SQ1.dx spinta var*) generato dal carico variabile in copertura pari a 20 kN/m · 0.426 = 8.52 kN/m; il carico applicato è rappresentato in Fig. 11;

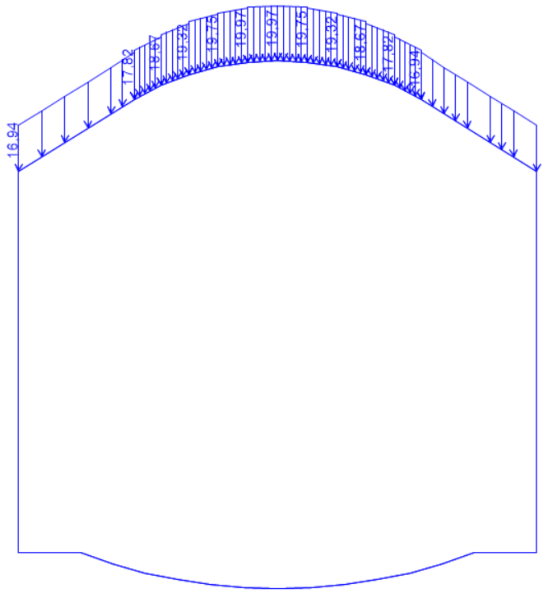

Fig. 10 - Galleria artificiale – Carico variabile in copertura

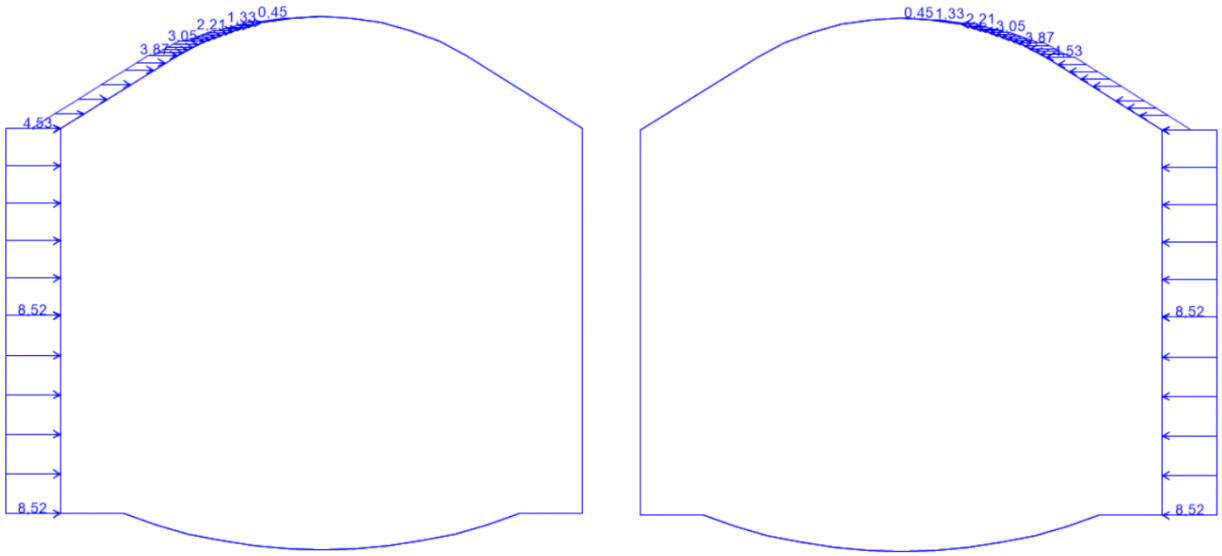

Fig. 11 - Galleria artificiale – Incremento spinta orizzontale per carico variabile in copertura

8.2.3 Azione sismica

L'accelerazione orizzontale massima attesa al suolo è definita al paragrafo 4.5. In presenza di sisma è necessario considerare gli effetti inerziali indotti da entrambe le componenti del moto sismico sui carichi. I carichi considerati sono:

- incremento di spinta del terreno sui fianchi della galleria (*DS.h sisma orizz*); valutato secondo la teoria di Wood. La risultante dell'azione sismica orizzontale può calcolarsi secondo:

$$\Delta S_H = \left(\frac{a_{max}}{g}\right) \cdot \gamma \cdot H^2$$

La spinta viene applicata su un solo lato dell'anello di rivestimento, uniformemente distribuita lungo l'altezza dell'opera, come mostrato in Fig. 12.

$$\Delta S_H = \frac{(0.0936) \cdot 20\, kN/\mathrm{m}^3 \cdot (9.00m)^2}{8.00m} = 18.95\, kN/m$$

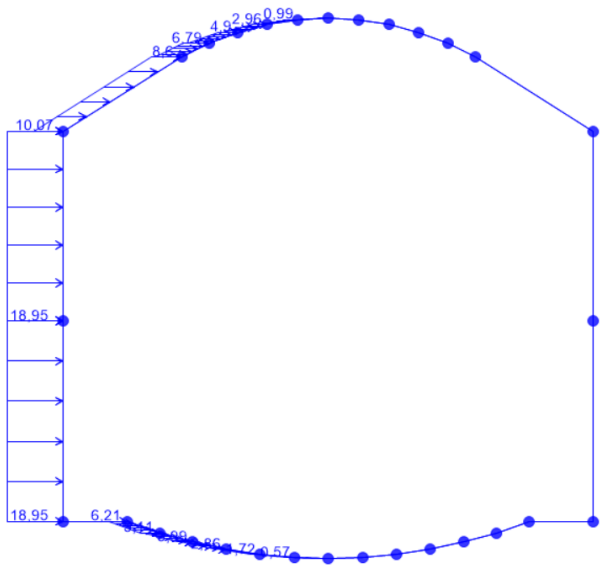

Fig. 12 - Galleria artificiale – Carico sismico orizzontale

- variazione del peso del terreno di ritombamento ($\pm \Delta S_v$); l'incremento di spinta può valutarsi secondo la teoria di Wood, per cui la risultante dell'azione sismica verticale può calcolarsi secondo:

$$\Delta S_V = 0.5 \cdot \left(\frac{a_{max}}{g}\right) \cdot \gamma \cdot A$$

In cui A è il volume del terreno al di sopra della calotta = 3.0 · 9.00 = 27.00 m^3/m.

La spinta viene applicata sulla calotta, uniformemente distribuita sulla larghezza dell'opera.

$$\Delta S_V = \frac{0.5 \cdot 0.0936 \cdot 20\, kN/\mathrm{m}^3 \cdot 27.00\, m^3/m}{8.00\, m} = 3.16\, kN/\mathrm{m}$$

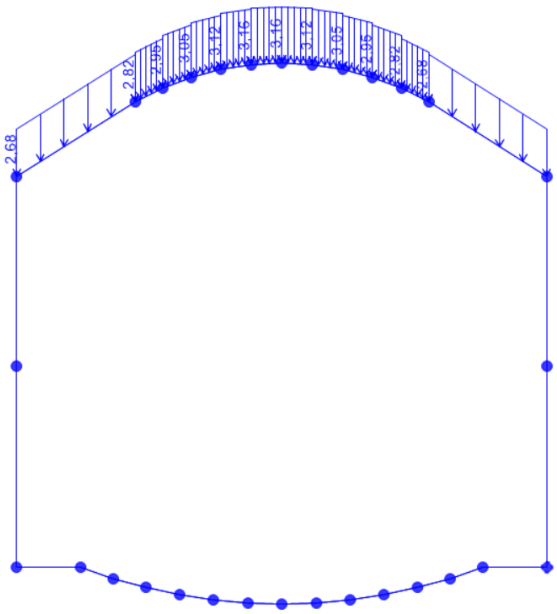

Fig. 13 - Galleria artificiale – Carico sismico verticale

- effetti inerziali della struttura della galleria nella direzione orizzontale (*I.h inerzia orizz*); viene applicato un carico gravitazionale con direzione X e accelerazione pari a:

$$k_h = \beta_m \cdot \left(\frac{a_{max}}{g}\right) = 0.0936$$

  dove β_m = 1 (per strutture non in grado di subire spostamenti relativi rispetto al terreno).

  Il programma provvede automaticamente ad associare delle forze aggiuntive in direzione X in funzione delle masse strutturali.

- effetti inerziali della struttura della galleria nella direzione verticale (*I.v inerzia vert*); viene applicato un carico gravitazionale con direzione Z e accelerazione pari a:

$$k_v = \pm 0.5 \cdot k_h = 0.0468$$

8.3 RISULTATI

Nel presente paragrafo si riportano i risultati ottenuti dall'analisi numerica condotta, in termini di stato limite ultimo SLU, in condizioni sismiche allo stato limite ultimo di salvaguardia della vita SLV e nello stato limite di esercizio in condizioni statiche SLE.

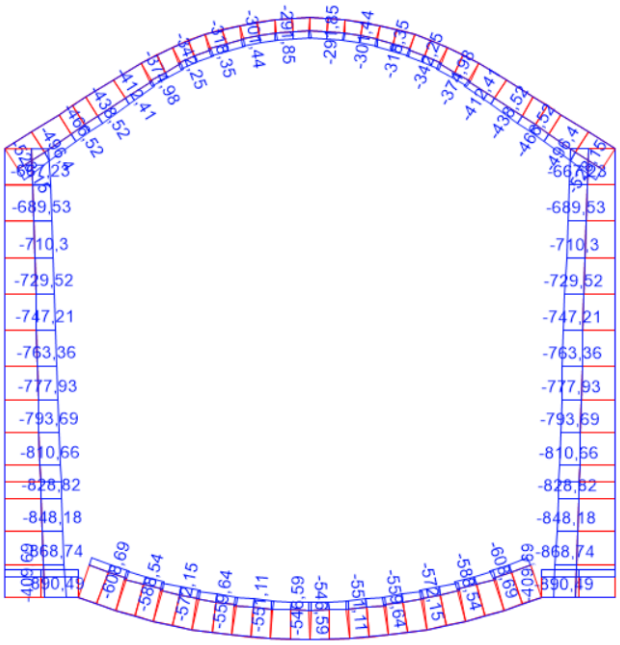

Fig. 14 - Galleria Artificiale – Inviluppo SLU – Sforzo normale [kN]

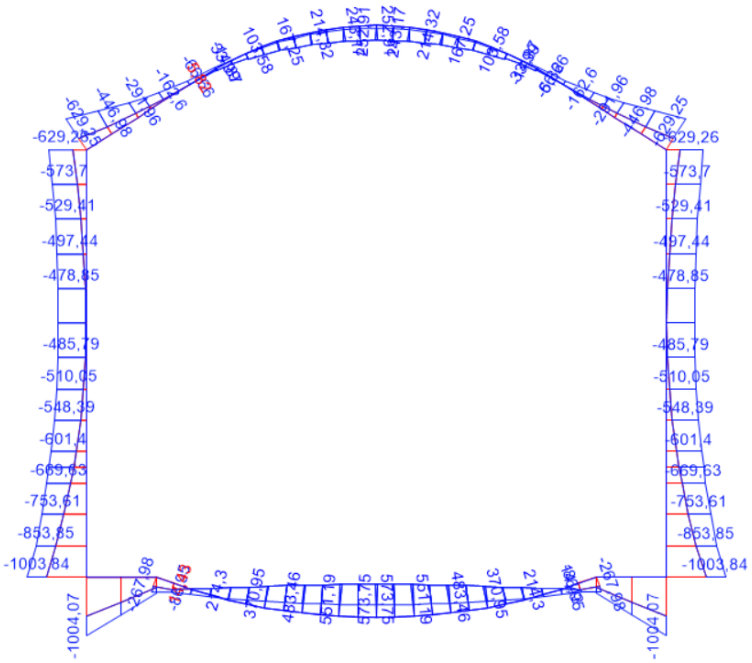

Fig. 15 - Galleria Artificiale – Inviluppo SLU – Momento flettente [kNm]

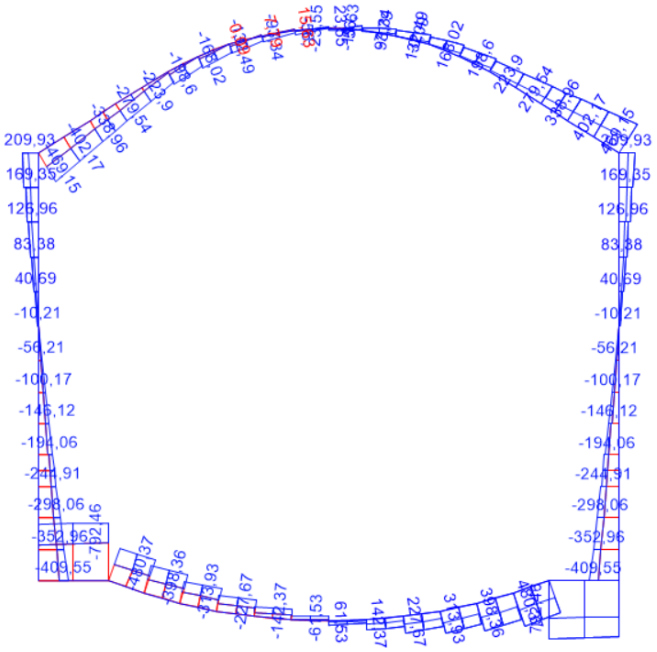

Fig. 16 - Galleria Artificiale – Inviluppo SLU – Taglio [kN]

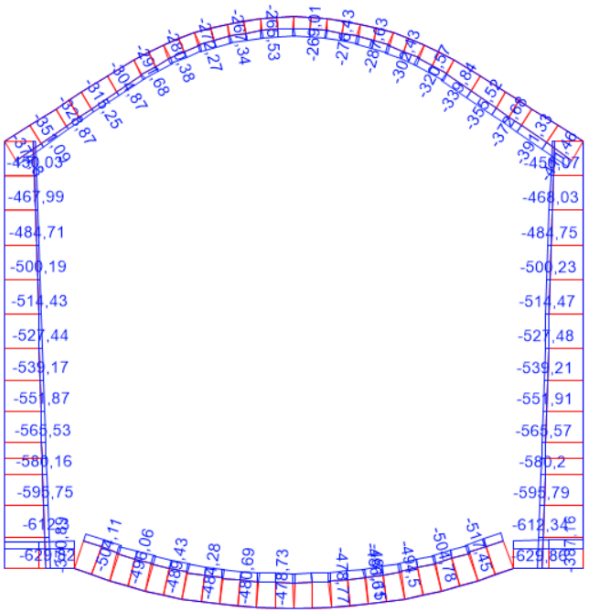

Fig. 17 - Galleria Artificiale – Inviluppo SLU – Sforzo normale [kN]

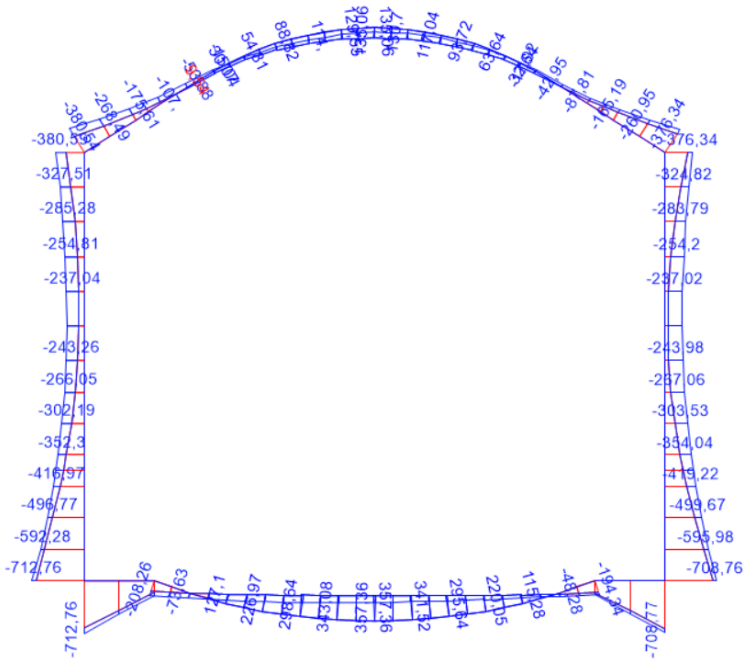

Fig. 18 - Galleria Artificiale – Inviluppo SLV – Momento flettente [kNm]

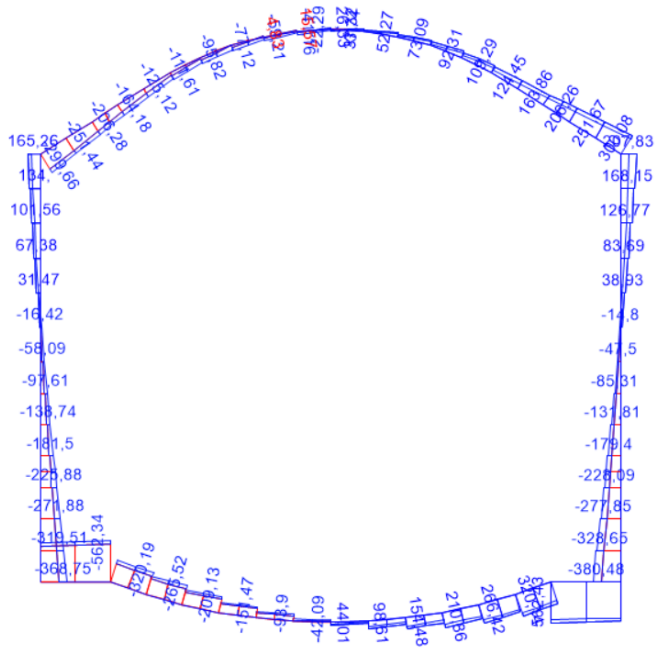

Fig. 19 - Galleria Artificiale – Inviluppo SLV – Taglio [kN]

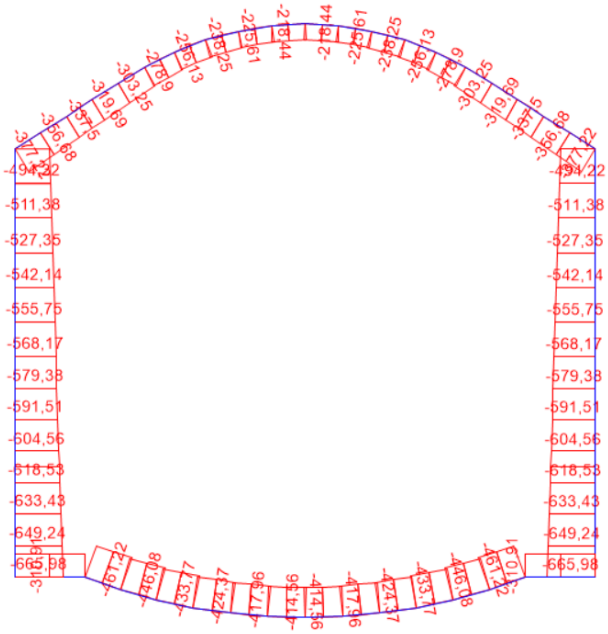

Fig. 20 - Galleria Artificiale – Combinazioni SLE caratteristica – Sforzo normale [kN]

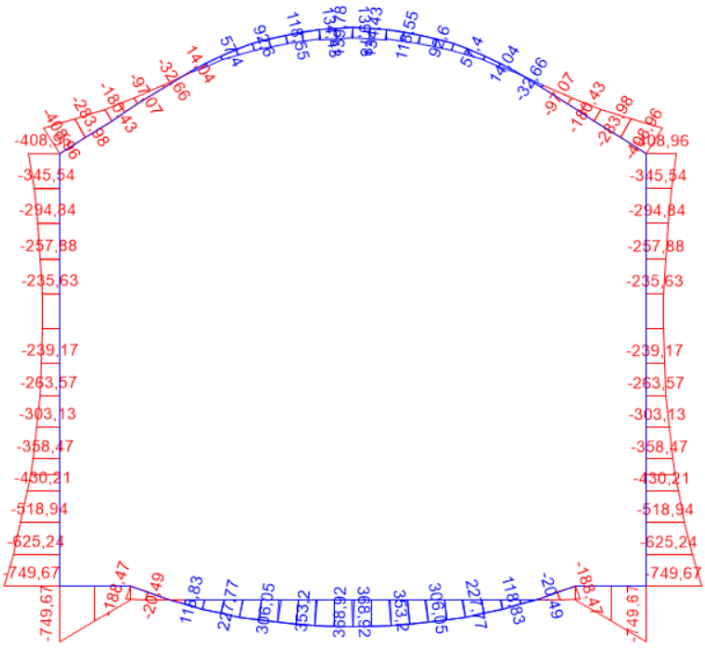

Fig. 21 - Galleria Artificiale – Combinazioni SLE caratteristica – Momento flettente [kNm]

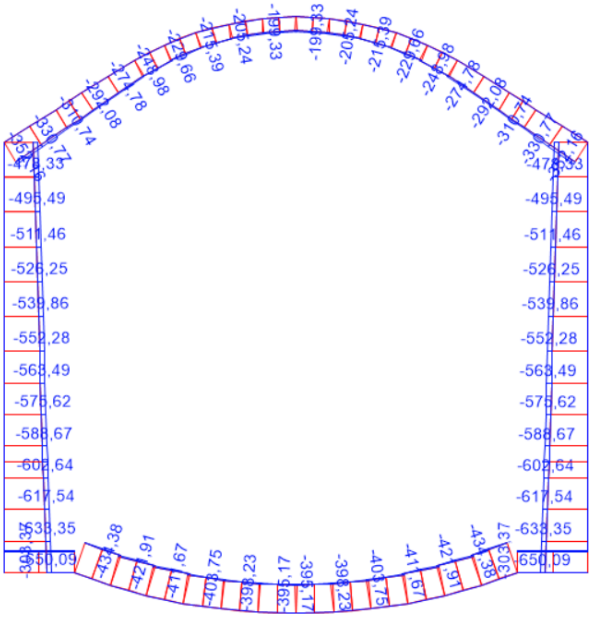

Fig. 22 - Galleria Artificiale – Combinazioni SLE frequente – Sforzo normale [kN]

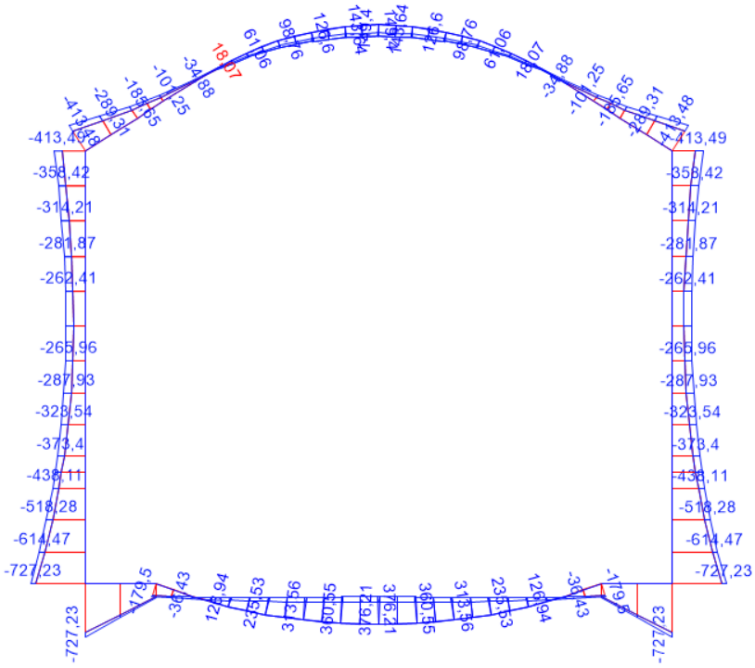

Fig. 23 - Galleria Artificiale – Combinazioni SLE frequente – Momento flettente [kNm]

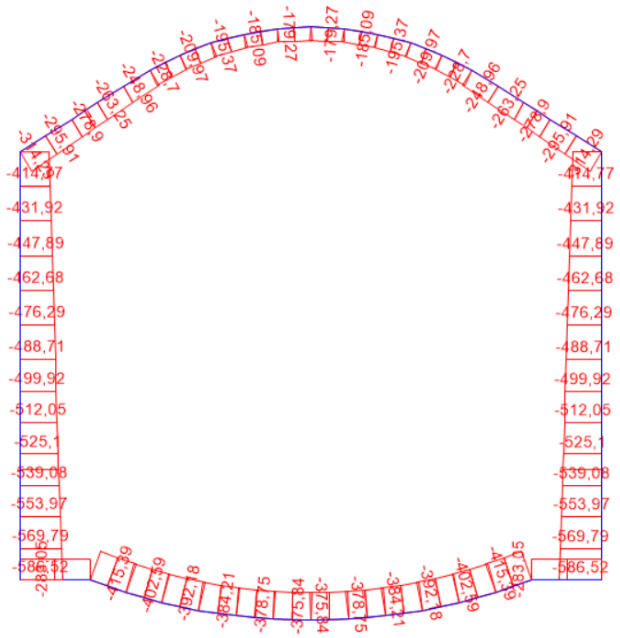

Fig. 24 - Galleria Artificiale – Combinazioni SLE quasi permanente – Sforzo normale [kN]

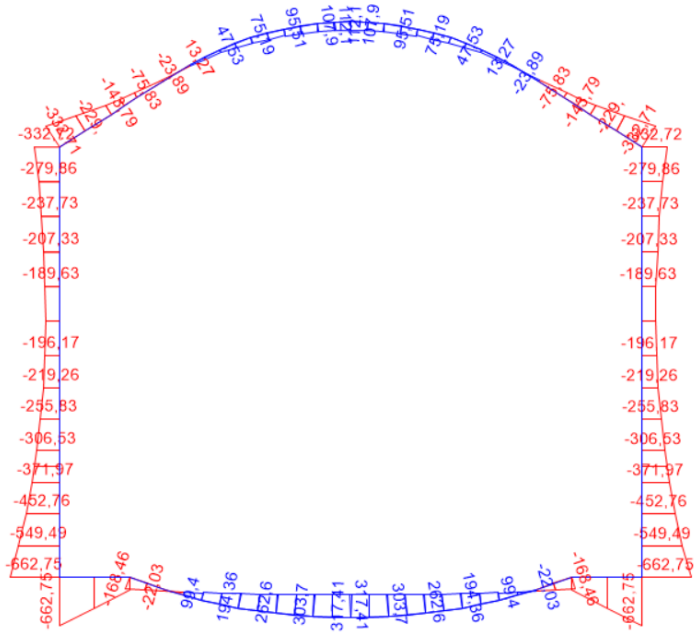

Fig. 25 - Galleria Artificiale – Combinazioni SLE quasi permanente – Momento flettente [kNm]

9. GALLERIE ARTIFICIALI – VERIFICHE STRUTTURALI

Le verifiche strutturali SLU/SLV del rivestimento definitivo vengono eseguite per confronto tra le sollecitazioni di calcolo (ottenute a partire dai risultati del modello numerico applicando gli opportuni coefficienti parziali) e le resistenze di calcolo (definite dai punti M_{Rd} e N_{Rd} che definiscono il dominio resistente nel piano *M-N*). Le verifiche riportate in seguito vengono condotte considerando le sollecitazioni più significative nelle sezioni specificate nella seguente tabella, in cui si riportano le sollecitazioni di verifica considerate.

Sezione	Spessore [cm]	Tipo sollecitazione	SLU	SLV	SLE		
					rara	freq.	q.p.
Piedritti base (sez. B-1)	140	*M [kNm]*	1003	713	749	727	662
		N [kN]	890	629	665	650	586
		V [kN]	409	369	-	-	-
Piedritti spessore min. (sez. B-2)	100	*M [kNm]*	486	244	239	265	196
		N [kN]	763	527	568	552	489
		V [kN]	-	-	-	-	-
Arco rovescio (sez. A)	90	*M [kNm]*	574	357	368	374	317
		N [kN]	547	478	415	395	375
		V [kN]	481	321	-	-	-
Calotta chiave (sez. C-1)	80	*M [kNm]*	252	135	139	149	112
		N [kN]	292	269	218	199	179
		V [kN]	-	-	-	-	-
Calotta reni (sez. C-2)	140	*M [kNm]*	630	380	409	413	332
		N [kN]	528	374	377	352	314
		V [kN]	469	300	-	-	-

Tab. 24 - Galleria Artificiale – sollecitazione di verifica

L'esame dei risultati dell'analisi numerica in termini di andamenti delle caratteristiche della sollecitazione agli SLU evidenzia una distribuzione pressoché omogenea dello sforzo normale lungo l'intero anello di rivestimento, con valori in calotta e in chiave arco rovescio leggermente inferiori rispetto ai piedritti. Riguardo il taglio e il momento flettente le sezioni maggiormente sollecitate sono localizzate alla base dei piedritti (tese le fibre esterne) ed in chiave arco rovescio (tese le fibre di intradosso, con taglio sostanzialmente nullo).

Nella seguente figura sono riportate le sezioni di verifica della galleria.

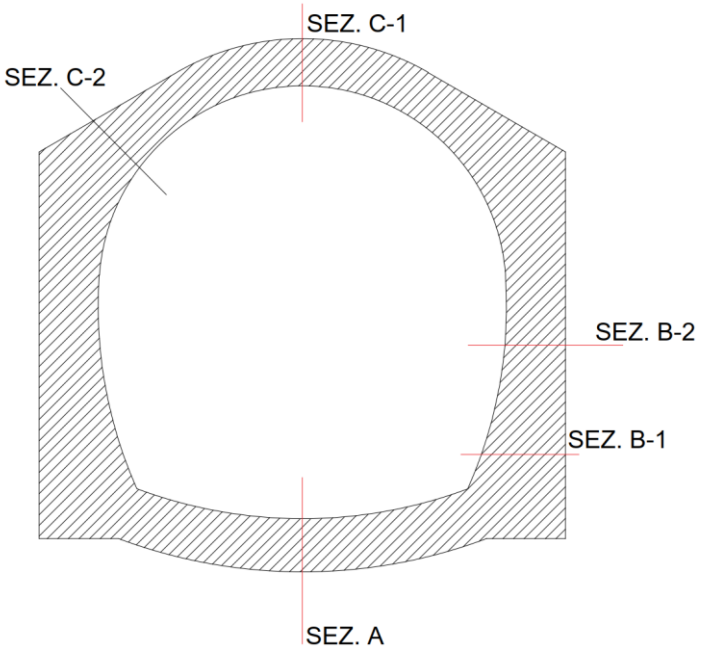

Fig. 26 - Galleria Artificiale – Sezioni di verifica

9.1 VERIFICHE ALLO STATO LIMITE ULTIMO SLU

9.1.1 Arco rovescio (sez. A)

Le verifiche strutturali condotte sul rivestimento di arco rovescio evidenziano la necessita di un'armatura principale simmetrica costituita da Φ20/20. Si considera un'armatura trasversale composta da barre Φ14/20.

Come armatura a taglio sono previsti ganci Φ12 con passo 40 cm in entrambe le direzioni.

geometria				
sezione trasversale				
B [cm]	H [cm]	c [cm]	d [cm]	z [cm]
100	90	7.8	81.2	73.1
armatura longitudinale				
nbarre	ϕ [mm]	d [cm]	Asl [cm²]	
5	20	8.8	15.71	
5	20	81.2	15.71	
armatura a taglio				
nbracci	ϕ [mm]	s [cm]	α [°]	Asw [cm²]
2.5	12	40	90	2.83

SLU		
MEd	574	[kNm]
NEd	-547	[kN]
VEd	481	[kN]
presso-flessione		
MRd	694.5	[kNm]
FS	1.21	
taglio		
VRdc	333.6	[kN]
predisporre armatura a taglio		
VRds	500.3	[kN]
VRdmax	1934.9	[kN]
θ	22.0	[°]
sezione	duttile	
al	90.4	[cm]

Fig. 27 - Arco rovescio (sez. A) – verifiche SLU

9.1.2 Piedritti (sez. B)

Le verifiche dei piedritti sono state condotte alla base (sez. B-1, spessore 140 cm) e nella zona in mezzeria dove è presente lo spessore minimo (sez. B-2, spessore 100 cm).

Le verifiche strutturali condotte sul rivestimento evidenziano la necessita di un'armatura principale simmetrica costituita da Φ20/20. Si considera un'armatura trasversale composta da barre Φ14/20.

Come armatura a taglio sono previsti ganci Φ12 con passo 40 cm in entrambe le direzioni.

geometria				
sezione trasversale				
B [cm]	H [cm]	c [cm]	d [cm]	z [cm]
100	140	7,8	131,2	118,1
armatura longitudinale				
nbarre	ϕ [mm]	d [cm]	Asl [cm2]	
5	20	8,8	15,71	
5	20	131,2	15,71	
armatura a taglio				
nbracci	ϕ [mm]	s [cm]	α [°]	Asw [cm2]
2,5	12	40	90	2,83

SLU		
MEd	1003,00	[kNm]
NEd	-890	[kN]
VEd	409,00	[kN]
presso-flessione		
MRd	1344,4	[kNm]
FS	1,34	
taglio		
VRdc	500,8	[kN]
non serve armatura a taglio		
VRds	808,4	[kN]
VRdmax	3126,3	[kN]
θ	22,0	[°]
sezione	duttile	
al	131,2	[cm]

Fig. 28 - Piedritti base (sez. B-1) – verifiche SLU

geometria				
sezione trasversale				
B [cm]	H [cm]	c [cm]	d [cm]	z [cm]
100	100	7,8	91,2	82,1
armatura longitudinale				
nbarre	ϕ [mm]	d [cm]	Asl [cm2]	
5	20	8,8	15,71	
5	20	91,2	15,71	
armatura a taglio				
nbracci	ϕ [mm]	s [cm]	α [°]	Asw [cm2]
2,5	12	40	90	2,83

SLU		
M_{Ed}	486,00	[kNm]
N_{Ed}	-763	[kN]
V_{Ed}	0,00	[kN]
presso-flessione		
M_{Rd}	872,1	[kNm]
FS	1,79	
taglio		
V_{Rdc}	387,8	[kN]
non serve armatura a taglio		
V_{Rds}	561,9	[kN]
V_{Rdmax}	2173,2	[kN]
θ	22,0	[°]
sezione	duttile	
a_l	91,2	[cm]

Fig. 29 - Piedritti spessore minimo (sez. B-2) – verifiche SLU

9.1.3 Calotta (sez. C)

Le verifiche strutturali condotte sul rivestimento di calotta evidenziano la necessita di un'armatura principale simmetrica costituita da Φ20/20. Si considera un'armatura trasversale composta da barre Φ14/20.

Come armatura a taglio sono previsti ganci Φ12 con passo 40 cm in entrambe le direzioni.

Le verifiche della calotta sono state condotte in chiave (spessore 80 cm, sez. C-1), e nella zona dei reni con spessore 140 cm (sez. C-2).

geometria				
sezione trasversale				
B [cm]	H [cm]	c [cm]	d [cm]	z [cm]
100	80	7,8	71,2	64,1
armatura longitudinale				
nbarre	ϕ [mm]	d [cm]	Asl [cm2]	
5	20	8,8	15,71	
5	20	71,2	15,71	
armatura a taglio				
nbracci	ϕ [mm]	s [cm]	α [°]	Asw [cm2]
2,5	12	40	90	2,83

SLU		
M_{Ed}	252,00	[kNm]
N_{Ed}	-292	[kN]
V_{Ed}	0,00	[kN]
presso-flessione		
M_{Rd}	524,7	[kNm]
FS	2,08	
taglio		
V_{Rdc}	274,3	[kN]
non serve armatura a taglio		
V_{Rds}	438,7	[kN]
V_{Rdmax}	1696,6	[kN]
θ	22,0	[°]
sezione	duttile	
a_l	71,2	[cm]

Fig. 30 - Calotta chiave (sez. C-1) – verifiche SLU

geometria				
sezione trasversale				
B [cm]	H [cm]	c [cm]	d [cm]	z [cm]
100	140	7,8	131,2	118,1
armatura longitudinale				
nbarre	ϕ [mm]	d [cm]	Asl [cm2]	
5	20	8,8	15,71	
5	20	131,2	15,71	
armatura a taglio				
nbracci	ϕ [mm]	s [cm]	α [°]	Asw [cm2]
2,5	12	40	90	2,83

SLV		
M_{Ed}	630,00	[kNm]
N_{Ed}	-528	[kN]
V_{Ed}	469,00	[kN]
presso-flessione		
M_{Rd}	1127,8	[kNm]
FS	1,79	
taglio		
V_{Rdc}	449,9	[kN]
predisporre armatura a taglio		
V_{Rds}	808,4	[kN]
V_{Rdmax}	3126,3	[kN]
θ	22,0	[°]
sezione	duttile	
a_l	146,1	[cm]

Fig. 31 - Calotta reni (sez. C-2) – verifiche SLU

9.2 VERIFICHE IN CONDIZIONI SISMICHE ALLO SLV

9.2.1 Arco rovescio (sez. A)

geometria				
sezione trasversale				
B [cm]	H [cm]	c [cm]	d [cm]	z [cm]
100	90	7.8	81.2	73.1
armatura longitudinale				
nbarre	ϕ [mm]	d [cm]	A_{sl} [cm^2]	
5	20	8.8	15.71	
5	20	81.2	15.71	
armatura a taglio				
nbracci	ϕ [mm]	s [cm]	α [°]	A_{sw} [cm^2]
2.5	12	40	90	2.83

SLV		
M_{Ed}	357	[kNm]
N_{Ed}	-478	[kN]
V_{Ed}	321	[kN]
presso-flessione		
M_{Rd}	668.9	[kNm]
FS	1.87	
taglio		
V_{Rdc}	324.3	[kN]
non serve armatura a taglio		
V_{Rds}	500.3	[kN]
V_{Rdmax}	1934.9	[kN]
θ	22.0	[°]
sezione	duttile	
a_l	81.2	[cm]

Fig. 32 - Arco rovescio (sez. A) – verifiche SLV

9.2.2 Piedritti (sez. B)

geometria				
sezione trasversale				
B [cm]	H [cm]	c [cm]	d [cm]	z [cm]
100	140	7,8	131,2	118,1
armatura longitudinale				
nbarre	ϕ [mm]	d [cm]	Asl [cm2]	
5	20	8,8	15,71	
5	20	131,2	15,71	
armatura a taglio				
nbracci	ϕ [mm]	s [cm]	α [°]	Asw [cm2]
2,5	12	40	90	2,83

SLV		
M_{Ed}	713,00	[kNm]
N_{Ed}	-629	[kN]
V_{Ed}	369,00	[kN]
presso-flessione		
M_{Rd}	1188,2	[kNm]
FS	1,67	
taglio		
V_{Rdc}	464,1	[kN]
non serve armatura a taglio		
V_{Rds}	808,4	[kN]
V_{Rdmax}	3126,3	[kN]
θ	22,0	[°]
sezione	duttile	
a_l	131,2	[cm]

Fig. 33 - Piedritti base (sez. B-1) – verifiche SLV

geometria				
sezione trasversale				
B [cm]	H [cm]	c [cm]	d [cm]	z [cm]
100	100	7,8	91,2	82,1
armatura longitudinale				
nbarre	ϕ [mm]	d [cm]	Asl [cm2]	
5	20	8,8	15,71	
5	20	91,2	15,71	
armatura a taglio				
nbracci	ϕ [mm]	s [cm]	α [°]	Asw [cm2]
2,5	12	40	90	2,83

SLV		
M_{Ed}	244,00	[kNm]
N_{Ed}	-527	[kN]
V_{Ed}	0,00	[kN]
presso-flessione		
M_{Rd}	773,5	[kNm]
FS	3,17	
taglio		
V_{Rdc}	355,5	[kN]
non serve armatura a taglio		
V_{Rds}	561,9	[kN]
V_{Rdmax}	2173,2	[kN]
θ	22,0	[°]
sezione	duttile	
a_l	91,2	[cm]

Fig. 34 - Piedritti spessore minimo (sez. B-2) – verifiche SLV

9.2.3 Calotta (sez. C)

geometria					SLV		
sezione trasversale					M_{Ed}	135,00	[kNm]
B	H	c	d	z	N_{Ed}	-269	[kN]
[cm]	[cm]	[cm]	[cm]	[cm]	V_{Ed}	0,00	[kN]
100	80	7,8	71,2	64,1	presso-flessione		
armatura longitudinale					M_{Rd}	517,3	[kNm]
nbarre	ϕ	d	Asl		FS	3,83	
	[mm]	[cm]	[cm2]		taglio		
5	20	8,8	15,71		V_{Rdc}	271,2	[kN]
5	20	71,2	15,71		non serve armatura a taglio		
					V_{Rds}	438,7	[kN]
armatura a taglio					V_{Rdmax}	1696,6	[kN]
nbracci	ϕ	s	α	Asw	θ	22,0	[°]
	[mm]	[cm]	[°]	[cm2]	sezione	duttile	
2,5	12	40	90	2,83	a_l	71,2	[cm]

Fig. 35 - Calotta chiave (sez. C-1) – verifiche SLV

geometria					SLV		
sezione trasversale					M_{Ed}	380,00	[kNm]
B	H	c	d	z	N_{Ed}	-374	[kN]
[cm]	[cm]	[cm]	[cm]	[cm]	V_{Ed}	300,00	[kN]
100	140	7,8	131,2	118,1	presso-flessione		
armatura longitudinale					M_{Rd}	1032,4	[kNm]
nbarre	ϕ	d	Asl		FS	2,72	
	[mm]	[cm]	[cm2]		taglio		
5	20	8,8	15,71		V_{Rdc}	428,3	[kN]
5	20	131,2	15,71		non serve armatura a taglio		
					V_{Rds}	808,4	[kN]
armatura a taglio					V_{Rdmax}	3126,3	[kN]
nbracci	ϕ	s	α	Asw	θ	22,0	[°]
	[mm]	[cm]	[°]	[cm2]	sezione	duttile	
2,5	12	40	90	2,83	a_l	131,2	[cm]

Fig. 36 - Calotta reni (sez. C-2) – verifiche SLV

9.3 VERIFICHE ALLO STATO LIMITE DI ESERCIZIO SLE

Le verifiche SLE del rivestimento definitivo sono finalizzate a prevenire la formazione di un quadro fessurativo non controllato tale da compromettere la durabilità dell'opera. A tal fine la normativa [3] stabilisce un limite massimo all'ampiezza delle fessure (stato limite di fessurazione) e al contempo impone il rispetto di opportuni limiti tensionali sia nell'acciaio che nel calcestruzzo (stato limite di tensione).

Per le tensioni di compressione nel calcestruzzo devono essere rispettati i seguenti limiti:

- Arco rovescio: - per combinazione di carico caratteristica (rara): 18.00 MPa
  - per combinazione di carico quasi permanente: 13.50 MPa
- Calotta/piedritti: - per combinazione di carico caratteristica (rara): 15.00 MPa
  - per combinazione di carico quasi permanente: 11.25 MPa

Per le armature ordinarie, la massima tensione di trazione sotto la combinazione caratteristica (rara) non deve superare il valore di 360.00 MPa.

La verifica dello stato limite di apertura delle fessure è condotta per le strutture a permanente contatto con il terreno in condizioni ambientali aggressive e molto aggressive, nei riguardi delle combinazioni per gli SLE "frequente" e "quasi permanente" il valore limite di apertura delle fessure è pari a w_1 = 0,2 mm. Per le strutture in condizioni ambientali ordinarie (lato interno della galleria) il valore limite di apertura delle fessure è pari a w_2 = 0,3 mm.

9.3.1 Arco rovescio (sez. A)

SLE RAR.			SLE FREQ.			SLE Q.P.		
MEk	368	[kNm]	MEk	374	[kNm]	MEk	317	[kNm]
NEk	-415	[kN]	NEk	-395	[kN]	NEk	-375	[kN]
tensioni e fessure			tensioni e fessure			tensioni e fessure		
Mdec	65.0	[kNm]	Mdec	61.8	[kNm]	Mdec	58.7	[kNm]
Mcr	380.1	[kNm]	Mcr	376.9	[kNm]	Mcr	373.8	[kNm]
yn	-20.96	[cm]	yn	-21.56	[cm]	yn	-20.48	[cm]
σc,min	-5.2	[MPa]	σc,min	-5.3	[MPa]	σc,min	-4.5	[MPa]
σs,min	-49.9	[MPa]	σs,min	-50.1	[MPa]	σs,min	-43.3	[MPa]
σs,max	187.1	[MPa]	σs,max	197.7	[MPa]	σs,max	156.3	[MPa]
k_2	0.5		k_2	0.5		k_2	0.5	
εsm-εcm	-	[‰]	εsm-εcm	-	[‰]	εsm-εcm	-	[‰]
Sr,max	-	[cm]	Sr,max	-	[cm]	Sr,max	-	[cm]
Wk	-	[mm]	Wk	-	[mm]	Wk	-	[mm]

Fig. 37 - Arco rovescio (sez. A) – verifiche SLE

9.3.2 Piedritti (sez. B)

SLE RAR.			SLE FREQ.			SLE Q.P		
MEk	749	[kNm]	MEk	727	[kNm]	MEk	662	[kNm]
NEk	-665	[kN]	NEk	-650	[kN]	NEk	-586	[kN]
tensioni e fessure			tensioni e fessure			tensioni e fessure		
Mdec	161,3	[kNm]	Mdec	157,6	[kNm]	Mdec	142,1	[kNm]
Mcr	907,8	[kNm]	Mcr	904,2	[kNm]	Mcr	888,7	[kNm]
yn	-33,89	[cm]	yn	-33,75	[cm]	yn	-33,95	[cm]
sc,min	-4,9	[MPa]	sc,min	-4,7	[MPa]	sc,min	-4,3	[MPa]
ss,min	-55,3	[MPa]	ss,min	-53,7	[MPa]	ss,min	-48,9	[MPa]
ss,max	192,7	[MPa]	ss,max	185,9	[MPa]	ss,max	170,8	[MPa]
k2	0,5		k2	0,5		k2	0,5	
esm-ecm	-	[‰]	esm-ecm	-	[‰]	esm-ecm	-	[‰]
sr,max	-	[cm]	sr,max	-	[cm]	sr,max	-	[cm]
wk	-	[mm]	wk	-	[mm]	wk	-	[mm]

Fig. 38 - Piedritti base (sez. B-1) – verifiche SLE

SLE RAR.			SLE FREQ.			SLE Q.P		
MEk	239	[kNm]	MEk	265	[kNm]	MEk	196	[kNm]
NEk	-568	[kN]	NEk	-552	[kN]	NEk	-489	[kN]
tensioni e fessure			tensioni e fessure			tensioni e fessure		
Mdec	98,8	[kNm]	Mdec	96,0	[kNm]	Mdec	85,1	[kNm]
Mcr	485,9	[kNm]	Mcr	483,1	[kNm]	Mcr	472,2	[kNm]
yn	-2,96	[cm]	yn	-8,77	[cm]	yn	-0,47	[cm]
sc,min	-2,4	[MPa]	sc,min	-2,8	[MPa]	sc,min	-2,0	[MPa]
ss,min	-29,8	[MPa]	ss,min	-33,2	[MPa]	ss,min	-24,4	[MPa]
ss,max	34,4	[MPa]	ss,max	51,2	[MPa]	ss,max	25,0	[MPa]
k2	0,5		k2	0,5		k2	0,5	
esm-ecm	-	[‰]	esm-ecm	-	[‰]	esm-ecm	-	[‰]
sr,max	-	[cm]	sr,max	-	[cm]	sr,max	-	[cm]
wk	-	[mm]	wk	-	[mm]	wk	-	[mm]

Fig. 39 - Piedritti spessore minimo (sez. B-2) – verifiche SLE

9.3.3 Calotta (sez. C)

SLE RAR.			SLE FREQ.			SLE Q.P		
MEk	139	[kNm]	MEk	149	[kNm]	MEk	112	[kNm]
NEk	-218	[kN]	NEk	-199	[kN]	NEk	-179	[kN]
tensioni e fessure			tensioni e fessure			tensioni e fessure		
Mdec	30,3	[kNm]	Mdec	27,7	[kNm]	Mdec	24,9	[kNm]
Mcr	280,5	[kNm]	Mcr	277,9	[kNm]	Mcr	275,1	[kNm]
yn	-15,79	[cm]	yn	-17,47	[cm]	yn	-15,56	[cm]
sc,min	-2,4	[MPa]	sc,min	-2,6	[MPa]	sc,min	-1,9	[MPa]
ss,min	-23,0	[MPa]	ss,min	-23,9	[MPa]	ss,min	-18,6	[MPa]
ss,max	70,2	[MPa]	ss,max	84,8	[MPa]	ss,max	55,7	[MPa]
k2	0,5		k2	0,5		k2	0,5	
esm-ecm	-	[‰]	esm-ecm	-	[‰]	esm-ecm	-	[‰]
sr,max	-	[cm]	sr,max	-	[cm]	sr,max	-	[cm]
wk	-	[mm]	wk	-	[mm]	wk	-	[mm]

Fig. 40 - Calotta chiave (sez. C-1) – verifiche SLE

SLE RAR.			SLE FREQ.			SLE Q.P		
MEk	409	[kNm]	MEk	413	[kNm]	MEk	332	[kNm]
NEk	-377	[kN]	NEk	-352	[kN]	NEk	-314	[kN]
tensioni e fessure			tensioni e fessure			tensioni e fessure		
Mdec	91,4	[kNm]	Mdec	85,4	[kNm]	Mdec	76,2	[kNm]
Mcr	838,0	[kNm]	Mcr	831,9	[kNm]	Mcr	822,7	[kNm]
yn	-33,10	[cm]	yn	-34,69	[cm]	yn	-32,53	[cm]
sc,min	-2,7	[MPa]	sc,min	-2,7	[MPa]	sc,min	-2,1	[MPa]
ss,min	-30,3	[MPa]	ss,min	-30,4	[MPa]	ss,min	-24,6	[MPa]
ss,max	101,6	[MPa]	ss,max	110,1	[MPa]	ss,max	80,4	[MPa]
k2	0,5		k2	0,5		k2	0,5	
esm-ecm	-	[‰]	esm-ecm	-	[‰]	esm-ecm	-	[‰]
sr,max	-	[cm]	sr,max	-	[cm]	sr,max	-	[cm]
wk	-	[mm]	wk	-	[mm]	wk	-	[mm]

Fig. 41 - Calotta reni (sez. C-2) – verifiche SLE

10. CONCIO DI ATTACCO – SEZIONE DI CALCOLO

10.1 CARATTERISTICHE GEOMETRICHE DELLA STRUTTURA

Il concio di attacco è stato calcolato considerando la sezione media di spessore 1.10 m in calotta, con una copertura in chiave di 5.0m. Adoperando la stessa geometria del modello numerico è stata verificata anche la sezione di spessore minimo 55 cm.

Le tabelle seguenti riassumono le caratteristiche geometriche delle sezioni analizzate (sezione media e minima) e degli interventi al contorno.

CONCIO DI ATTACCO – CARATTERISTICHE GEOMETRICHE DELL'OPERA E SOVRACCARICHI	
Copertura in chiave calotta	5.0 m
Spessore rivestimento di 1° fase	0.30 m
Spessore della calotta	1.10 m
Spessore del piedritto	Variabile tra 1.10m e 1.58m
Spessore dell'arco rovescio	0.90 m
Tipologia intervento al contorno	Colonne di jet grouting
Spessore dell'intervento al contorno	0.80 m

Tab. 25 – Concio di attacco, Caratteristiche geometriche sezione media

CONCIO DI ATTACCO – CARATTERISTICHE GEOMETRICHE DELL'OPERA E SOVRACCARICHI	
Copertura in chiave calotta	5.0 m
Spessore rivestimento di 1° fase	0.30 m
Spessore della calotta	0.55 m
Spessore del piedritto	Variabile tra 0.55m e 1.20m
Spessore dell'arco rovescio	0.90 m
Tipologia intervento al contorno	Colonne di jet grouting
Spessore dell'intervento al contorno	0.80 m

Tab. 26 – Concio di attacco, Caratteristiche geometriche sezione minima

Lo spessore del consolidamento al contorno è stato valutato geometricamente come lo spessore della zona di compenetrazione delle colonne aventi diametro 1.1m e interasse 0.8m. Con questa assunzione cautelativa si tiene pertanto in considerazione solo lo spessore del materiale trattato con continuità.

Le caratteristiche dei rivestimenti di prima fase e definito sono riportate rispettivamente in Tab. 27 e Tab. 28.

CONCIO DI ATTACCO – CARATTERISTICHE DEL RIVESTIMENTO DI PRIMA FASE	
Spessore dello spritz	0.3 m
Modulo elastico dello spritz	31447 MPa
Resistenza a compressione cubica dello spritz	30 MPa
Centine	2IPN180/1.0m
Area della centina (1IPN180)	27.9 cm^2
Modulo elastico della centina	210000 MPa
Momento di inerzia della centina (1IPN180)	1444 cm^4
Momento resistente della centina (1IPN180)	161 cm^3
Spessore equivalente del rivestimento di prima fase	0.3 m
Modulo elastico equivalente del rivestimento di prima fase	35295 MPa

Tab. 27 – Concio di attacco, Caratteristiche del rivestimento di prima fase

CONCIO DI ATTACCO – CARATTERISTICHE DEL RIVESTIMENTO DEFINITIVO	
Spessore di calotta	1.1 m sezione media – 0.55m sezione minima
Spessore di arco rovescio	0.9 m
Spessore di piedritto	Variabile tra 1.10m e 1.58m
Modulo elastico del calcestruzzo	31447 MPa
Resistenza a compressione cubica	30 MPa
Tipologia di acciaio per armatura	B450C
Modulo elastico dell'armatura	210000 MPa

Tab. 28 – Concio di attacco, Caratteristiche del rivestimento definitivo

10.2 MODELLO DI CALCOLO

L'interazione opera-terreno è stata valutata mediante una analisi FDM, utilizzando il codice di calcolo FLAC 8.0. Le dimensioni del modello numerico adottato prevedono una mesh 120x60 m, in cui è stata adottata una discretizzazione con una maglia di elementi rettangolari, opportunamente infittita nelle zone di maggiore interesse per poter seguire al meglio le geometrie locali delle strutture oggetto dell'analisi (si vedano Fig. 42 e Fig. 43).

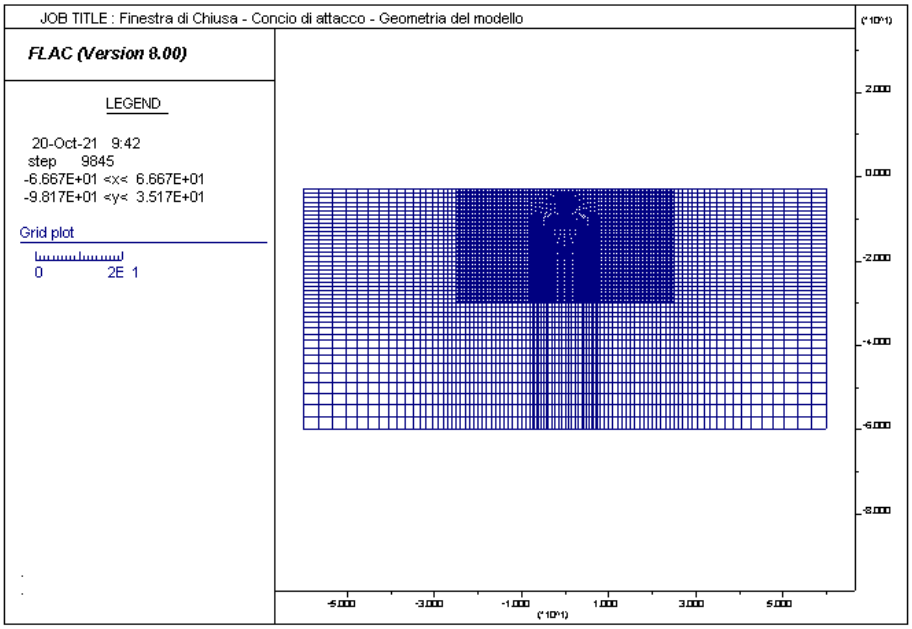

Fig. 42 – Concio di attacco, geometria del modello

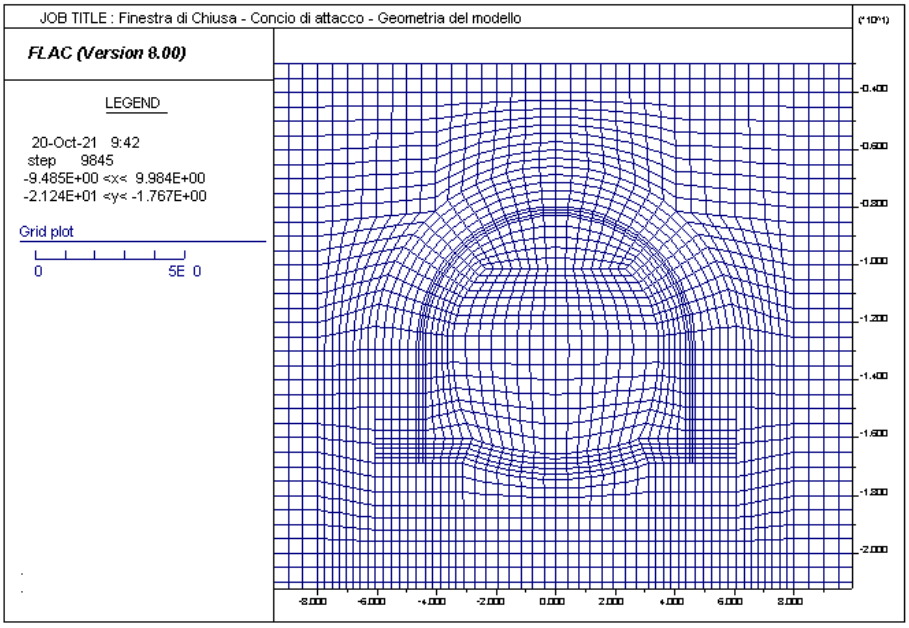

Fig. 43 – Concio di attacco, Dettaglio della suddivisione in zone

Lateralmente ed inferiormente il modello è vincolato con carrelli. I bordi del modello sono stati collocati sufficientemente distanti dalla galleria, in modo da evitare che le condizioni di vincolo ivi definite interferiscano con i processi di scavo e costruzione in esame.

I rivestimenti di prima fase e definitivi sono stati simulati utilizzando elementi di tipo "liner" con un comportamento di tipo elastico-lineare. A ciascun elemento "liner" sono state attribuite le reali dimensioni, in coerenza con quanto riportato nelle tavole di carpenteria.

Il modello costitutivo dell'ammasso è di tipo elasto-plastico "Mohr-Coulomb" secondo quanto riportato al §10.4.

10.3 CONSOLIDAMENTO AL FRONTE CON TRATAMENTO COLONNARE IN JET GROUTING

Se il fronte di scavo è rinforzato con trattamenti colonnari in jet grouting, i parametri di coesione sono migliorati specificando un incremento di coesione pari alla differenza tra la coesione dell'ammasso non trattato e quella dell'ammasso trattato; quest'ultima è valutata come media pesata della coesione originaria del terreno e quella del trattamento:

$$\Delta c = c_{ammasso\ trattato} - c_{ammasso} = \frac{c_{jet} \cdot A_{jet} + c_{ammasso} \cdot A_{ammasso}}{A_{tot}} - c_{ammasso}$$

in cui:

c_{jet} = coesione dei trattamenti colonnari

$c_{ammasso}$ = coesione dell'ammasso senza trattamenti

A_{jet}, $A_{ammasso}$, A_{tot} = sono le aree, rispettivamente, dei trattamenti colonnari, della sezione di scavo al netto dei trattamenti e della sezione di scavo.

In Tab. 29 si riporta il calcolo della coesione equivalente mediante trattamento colonnare del fronte con la tecnologia jet grouting.

Coesione equivalente consolidamenti al fronte			
A	95.0	m^2	area di scavo della galleria
D	1.1	m	diametro della colonna di jet
D	0.92	m	diametro della colonna di jet ridotto
A_{col}	0.660	m^2	area sezione della colonna
N	19	-	numero delle colonne
A_{jet}	12.5	m^2	area sezione della colonna
A_{jet}/A_{tot}	13	[%]	percentuale area jet/area colonne
A_{amm}	82.42	m	lunghezza campo di avanzamento
c_{jet}	432.00	kPa	coesione delle colonne di jet
c_{amm}	0.00	kPa	coesione dell'ammasso
Δc	57.0	kPa	incremento di coesione

Tab. 29 – Calcolo della coesione equivalente al fronte

In Tab. 29 il diametro ridotto delle colonne di jet grouting, pari a 0.92 m, è stato ottenuto assumendo cautelativamente un coefficiente di sicurezza di 1.2 sul diametro della colonna teorica uguale a 1.1m.

10.4 PARAMETRI GEOTECNICI

I parametri geotecnici assunti nell'analisi numerica sono riportati in Tab. 30.

In Tab. 31 si riassumono invece le caratteristiche meccaniche dell'intervento al contorno costituito da trattamento colonnare in jet grouting di spessore pari a 80cm. Per il jet grouting l'angolo di attrito è stato assunto pari a quello del materiale vergine trattato.

Unità litologica	γ (kN/m³)	c'_d (kPa)	ϕ'_d (°)	E (MPa)	K_0 (-)
Substrato detritico no.1	20	0	33	50	0.455
Substrato detritico no.2	20	0	34	50	0.441
Substrato detritico no.3	20	0	35	50	0.426
Substrato detritico no.4	20	0	36	50	0.412
Unità BSSb	27	123	38.7	450	0.430

Tab. 30 – Concio di attacco, Parametri geotecnici della stratigrafia di calcolo

Intervento	c'_d (kPa)	E (MPa)
Jet grouting	432	700

Tab. 31 – Concio di attacco, Parametri trattamento colonnare in jet grouting

La coesione del materiale consolidato mediante jet grouting è stata calcolata con riferimento alla seguente formulazione:

$$\sigma_{c,jet} = \frac{2 \cdot c'_{k,jet} \cdot \cos \varphi'_k}{1 - \sin \varphi'_k}$$

assumendo come valore della resistenza a compressione del jet ($\sigma_{c,jet}$) 2.0 MPa, come valore dell'angolo di attrito il minor valore del terreno naturale, pari a 33°, e applicando al valore della coesione così calcolato un fattore di sicurezza pari a 1.25. La procedura di calcolo è riportata nella tabella sottostante:

Intervento in jet grouting – Coesione di calcolo	
Resistenza a compressione del jet grouting	2.0 MPa
Angolo di attrito del terreno	33°
Coesione caratteristica del jet grouting	540 MPa
Coesione di calcolo del jet grouting	432 MPa

Tab. 32 – Calcolo della coesione del trattamento colonnare in jet grouting

10.5 FASI DI CALCOLO

Le fasi dell'analisi numerica sono riassunte in Tab. 33

FASI DI CALCOLO	
Fase 1	– Costruzione della geometria del modello
Fase 2	– Inizializzazione dello stato tensionale iniziale gravitativo – condizioni k_0 – modello costitutivo elasto-plastico "Mohr-Coulomb"
DIMENSIONAMENTO RIVESTIMENTI DI PRIMA FASE	
Fase 3a	– Realizzazione dell'intervento di consolidamento al contorno e preconvergenza al fronte con rilascio parziale dello stato tensionale sul contorno di scavo pari al 30% (λ=0.3)
Fase 4a	– Installazione del rivestimento di prima fase e rilascio totale sul contorno di scavo pari al 100% (λ=1.0)
DIMENSIONAMENTO RIVESTIMENTI DEFINITIVI – SEZIONE MEDIA	
Fase 3b	– Realizzazione dell'intervento di consolidamento al contorno e attivazione del rivestimento definitivo con rilascio totale sul contorno di scavo pari al 100% (λ=1.0)
Fase 4b	– Degrado delle caratteristiche meccaniche dell'intervento di consolidamento al contorno
DIMENSIONAMENTO RIVESTIMENTI DEFINITIVI – SEZIONE MINIMA	
Fase 3c	– Realizzazione dell'intervento di consolidamento al contorno e attivazione del rivestimento definitivo con rilascio totale sul contorno di scavo pari al 100% (λ=1.0)
Fase 4c	– Degrado delle caratteristiche meccaniche dell'intervento di consolidamento al contorno

Tab. 33 – Concio di attacco, Fasi di calcolo

Le fasi di calcolo riportate in Tab. 33 per il dimensionamento dei rivestimenti sia definitivi che di prima fase sono da intendersi come tra loro separate, al fine di massimizzare le sollecitazioni sia sui rivestimenti definitivi che sui rivestimenti provvisori.

10.6 RISULTATI

I risultati dell'analisi numerica condotta sono riportati nelle seguenti immagini:

- Tensione principale massima e minima – Fase 2 (Fig. 44 e Fig. 45);
- Tensione principale massima e minima – Fase 3a (Fig. 46 e Fig. 47)
- Rapporto di mobilitazione – Fase 3a (Fig. 48)
- Spostamenti verticale e orizzontale – Fase 3a (Fig. 49 e Fig. 50)
- Tensione principale massima e minima – Fase 4a (Fig. 51 e Fig. 52)
- Rapporto di mobilitazione – Fase 4a (Fig. 53Fig. 48)
- Spostamenti verticale e orizzontale – Fase 4a (Fig. 54 e Fig. 55)
- Sollecitazioni del rivestimento di prima fase – Fase 4a (Fig. 56, Fig. 57 e Fig. 58)
- Tensione principale massima e minima – Fase 3b (Fig. 59 e Fig. 60)
- Rapporto di mobilitazione – Fase 3b (Fig. 61Fig. 48)
- Sollecitazioni del rivestimento definitivo (sezione media) – Fase 3b (Fig. 62, Fig. 63 e Fig. 64)
- Tensione principale massima e minima – Fase 4b (Fig. 65 e Fig. 66)
- Rapporto di mobilitazione – Fase 4b (Fig. 67)
- Sollecitazioni del rivestimento definitivo (sezione media) – Fase 4b (Fig. 68, Fig. 69 e Fig. 70)
- Tensione principale massima e minima – Fase 4c (Fig. 70 e Fig. 71)
- Rapporto di mobilitazione – Fase 4c (Fig. 72)
- Sollecitazione del rivestimento definitivo (sezione minima) – Fase 4c (Fig. 73, Fig. 74 e Fig. 75)
- Diagrammi dei cedimenti indotti a piano campagna – Fase 4a (Fig. 77)

I cedimenti indotti a piano campagna dallo scavo della galleria con riferimento alla fase di analisi 4a non superano i 5 mm.

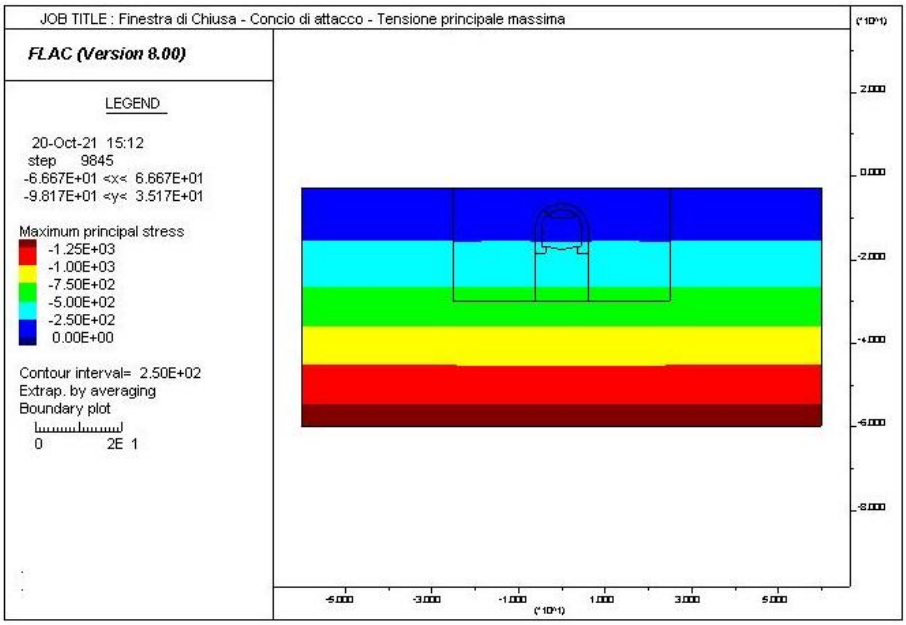

Fig. 44 – Concio di attacco – Tensione principale massima (Fase 2)

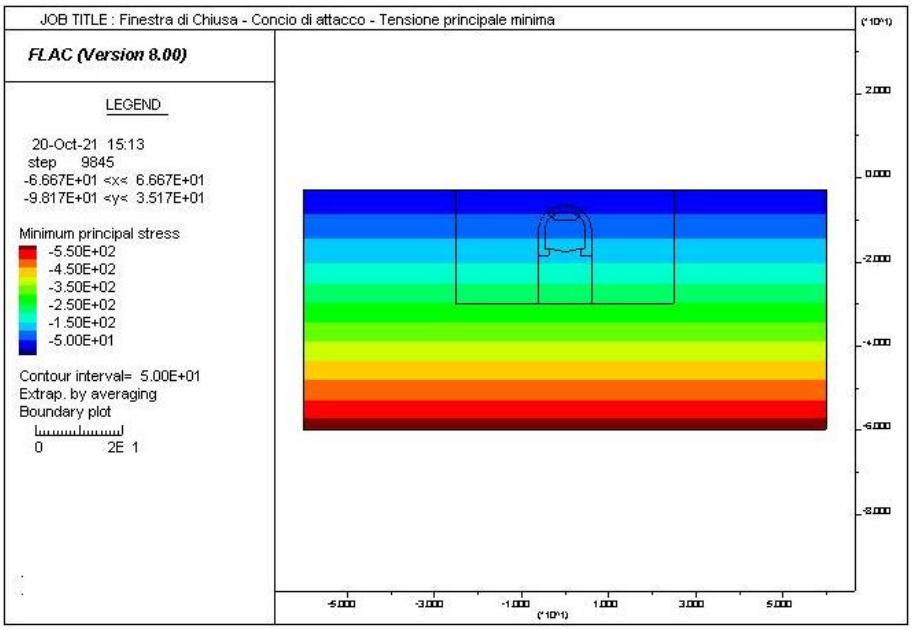

Fig. 45 – Concio di attacco – Tensione principale minima (Fase 2)

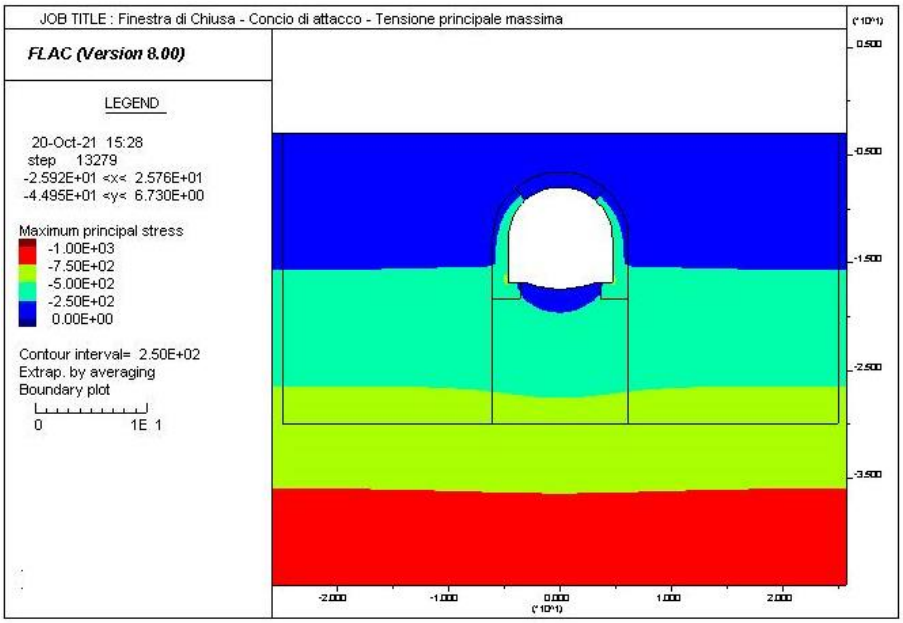

Fig. 46 – Concio di attacco – Tensione principale massima (Fase 3a)

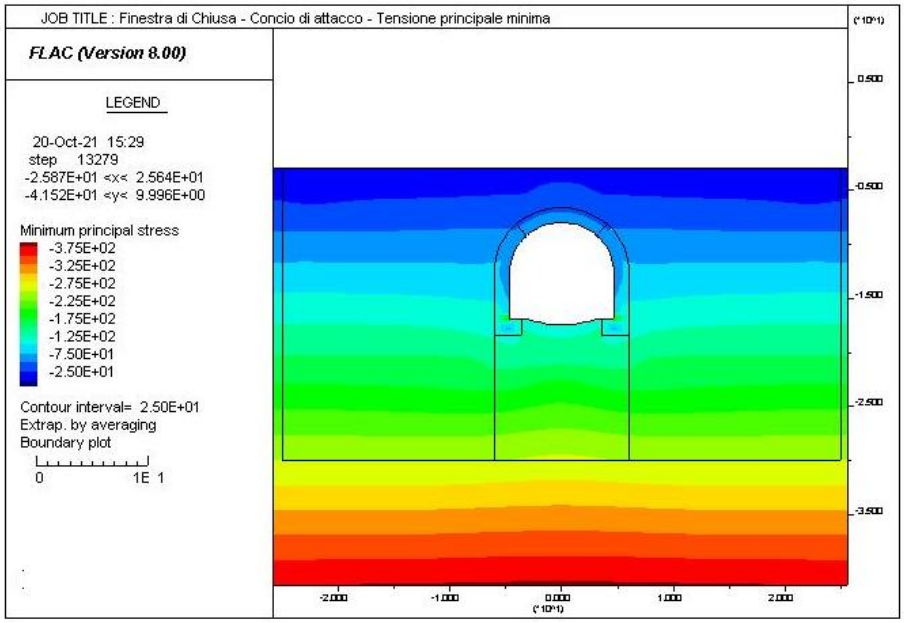

Fig. 47 – Concio di attacco – Tensione principale minima (Fase 3a)

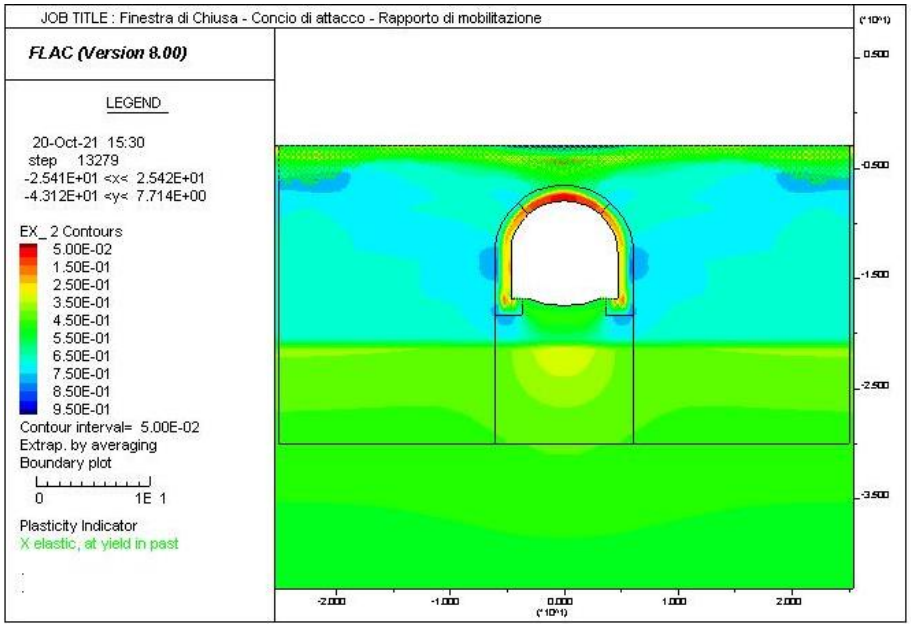

Fig. 48 – Concio di attacco – Rapporto di mobilitazione (Fase 3a)

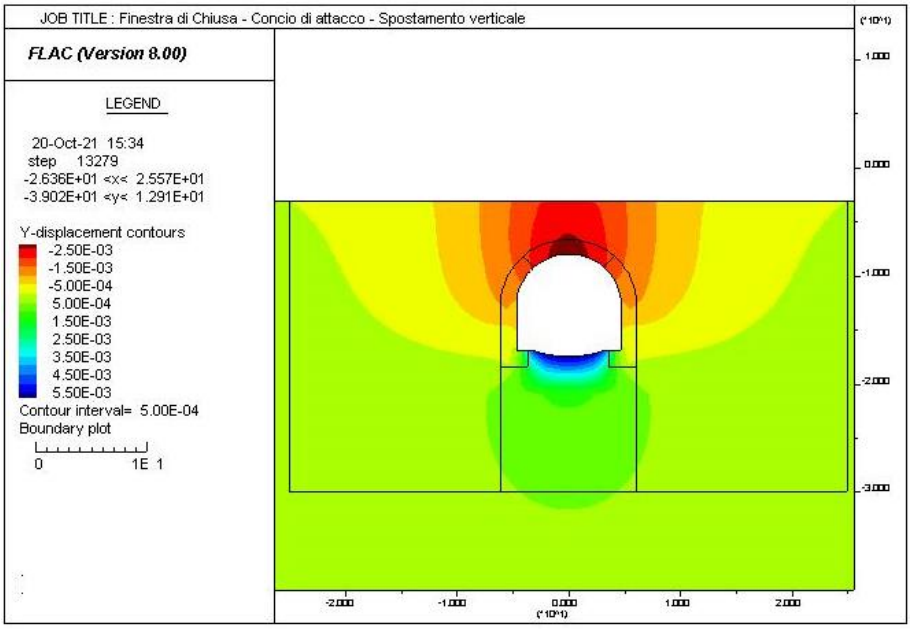

Fig. 49 – Concio di attacco – Spostamento verticale (Fase 3a)

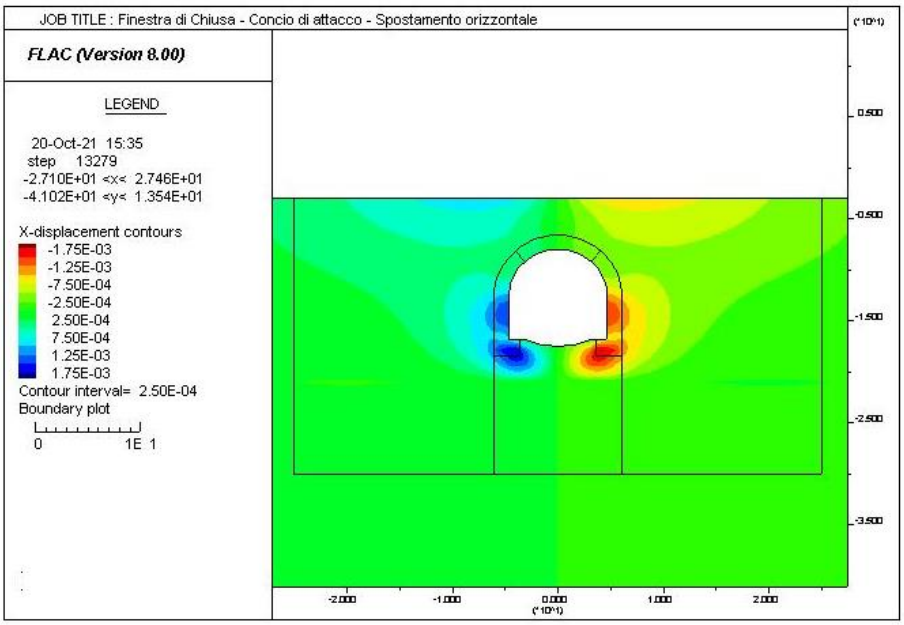

Fig. 50 - Concio di attacco – Spostamento orizzontale (Fase 3a)

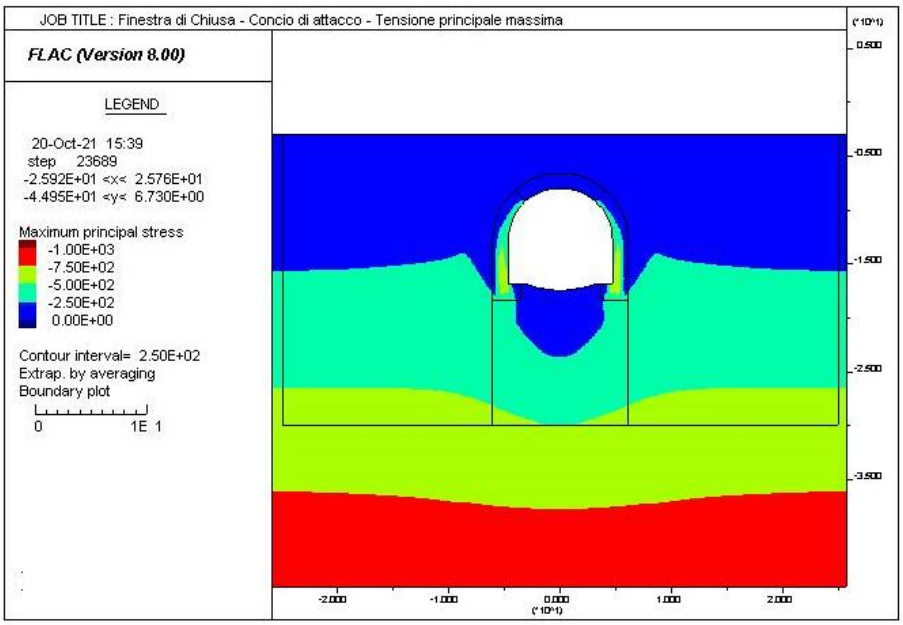

Fig. 51 – Concio di attacco – Tensione principale massima (Fase 4a)

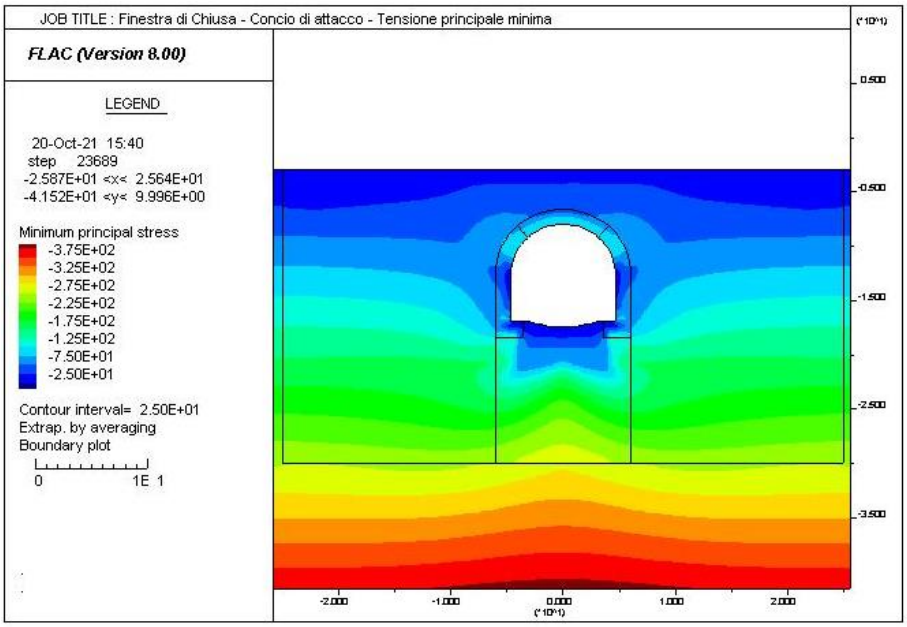

Fig. 52 – Concio di attacco – Tensione principale minima (Fase 4a)

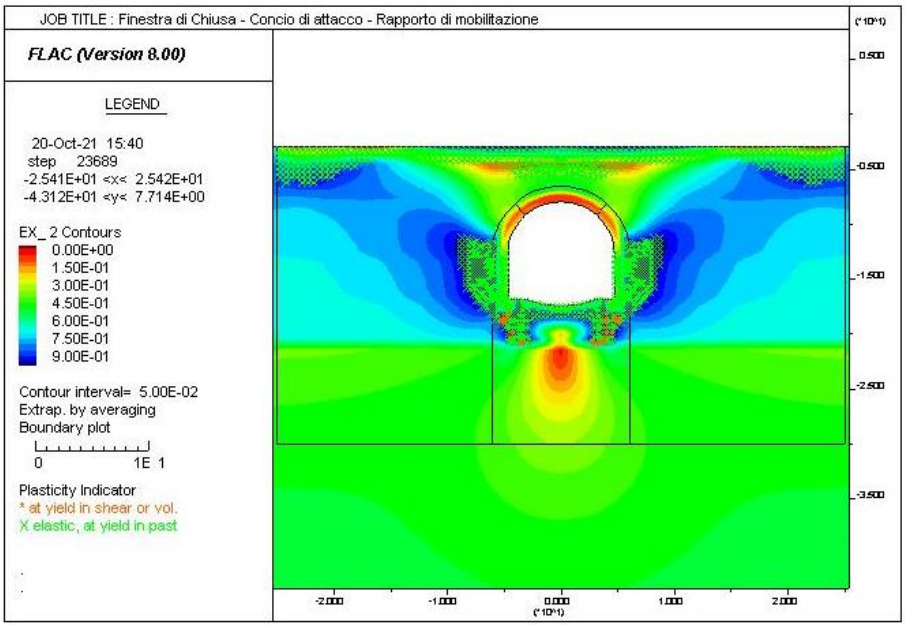

Fig. 53 – Concio di attacco – Rapporto di mobilitazione (Fase 4a)

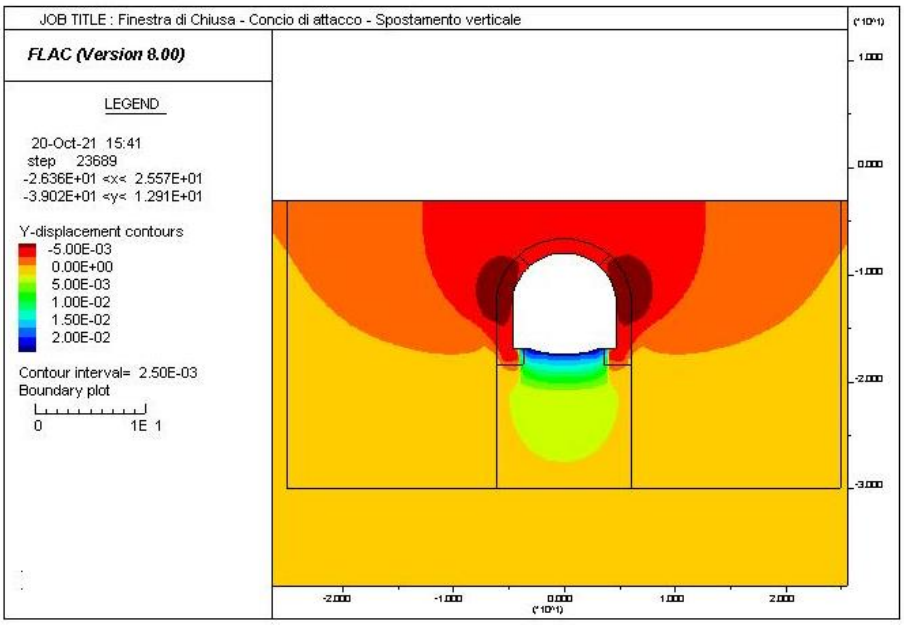

Fig. 54 – Concio di attacco – Spostamento verticale (Fase 4a)

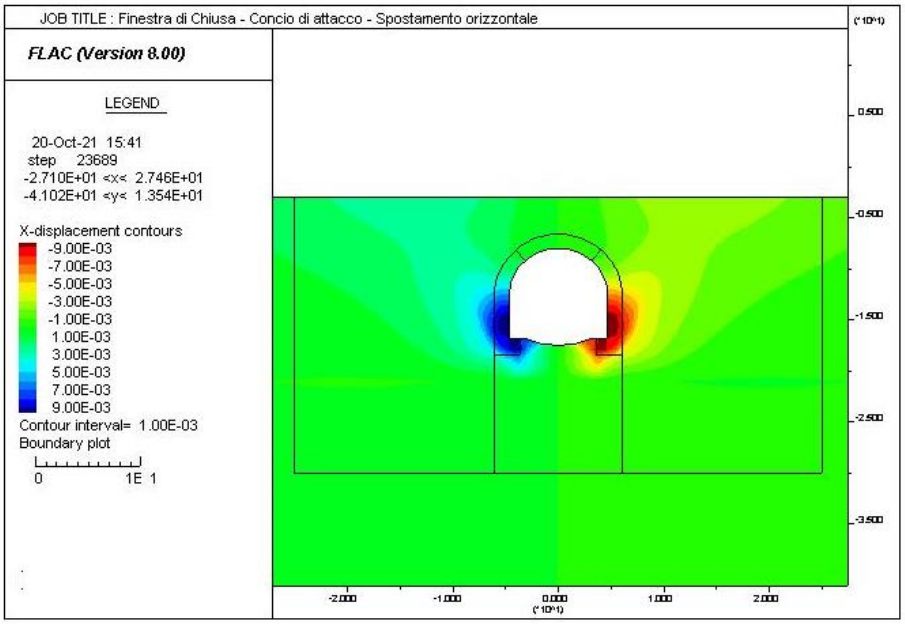

Fig. 55 – Concio di attacco – Spostamento orizzontale (Fase 4a)

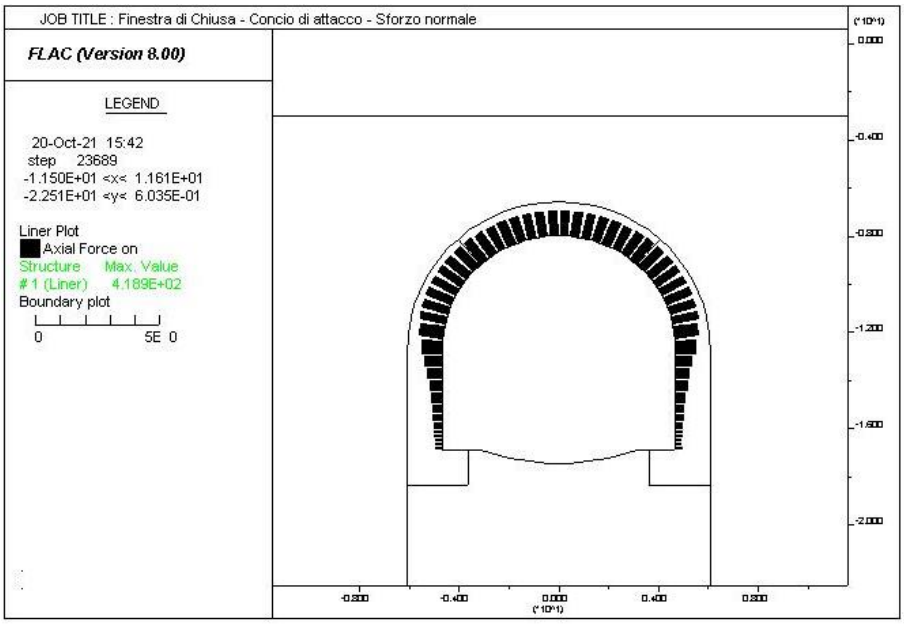

Fig. 56 – Concio di attacco – Sforzo normale (Fase 4a)

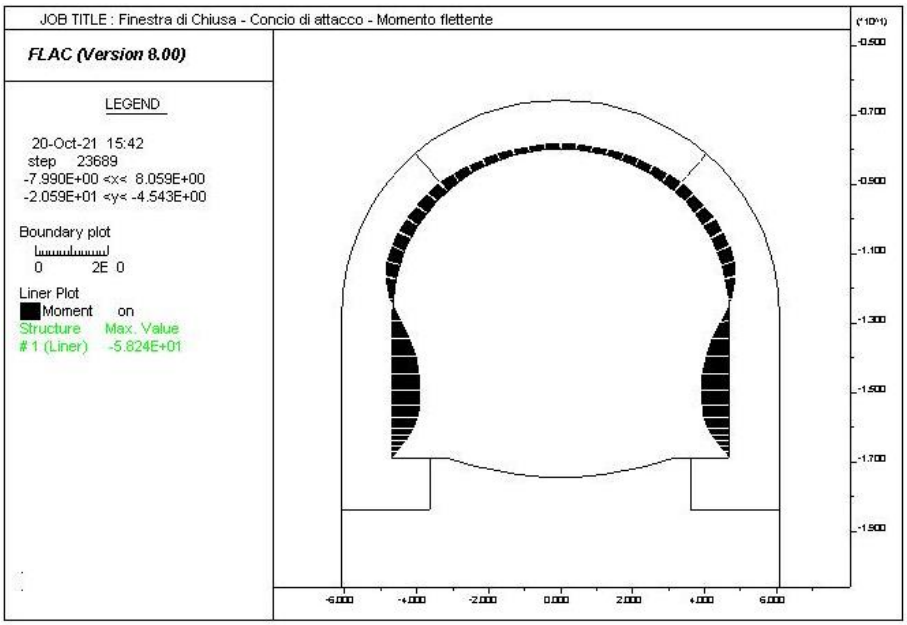

Fig. 57 – Concio di attacco – Momento flettente (Fase 4a)

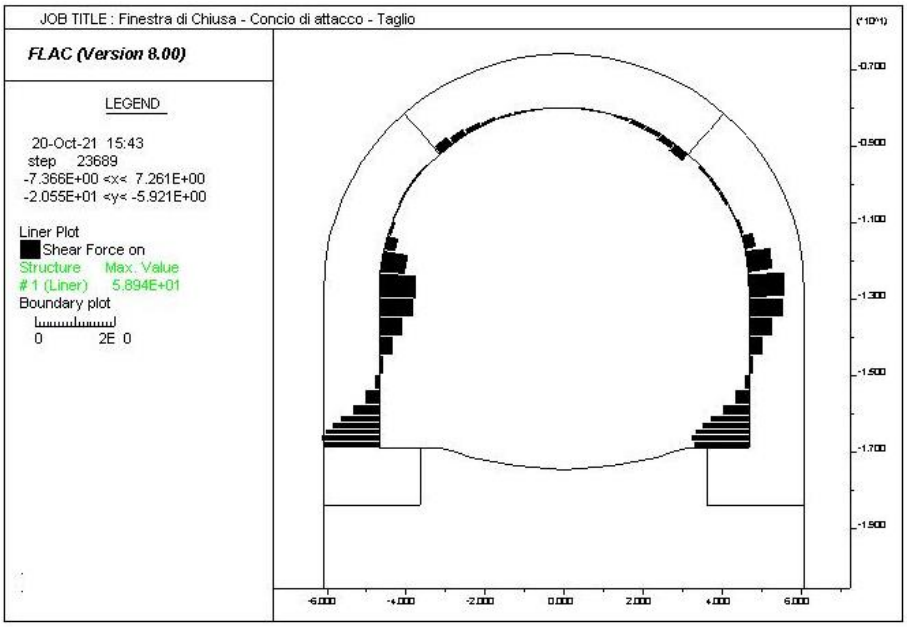

Fig. 58 – Concio di attacco – Taglio (Fase 4a)

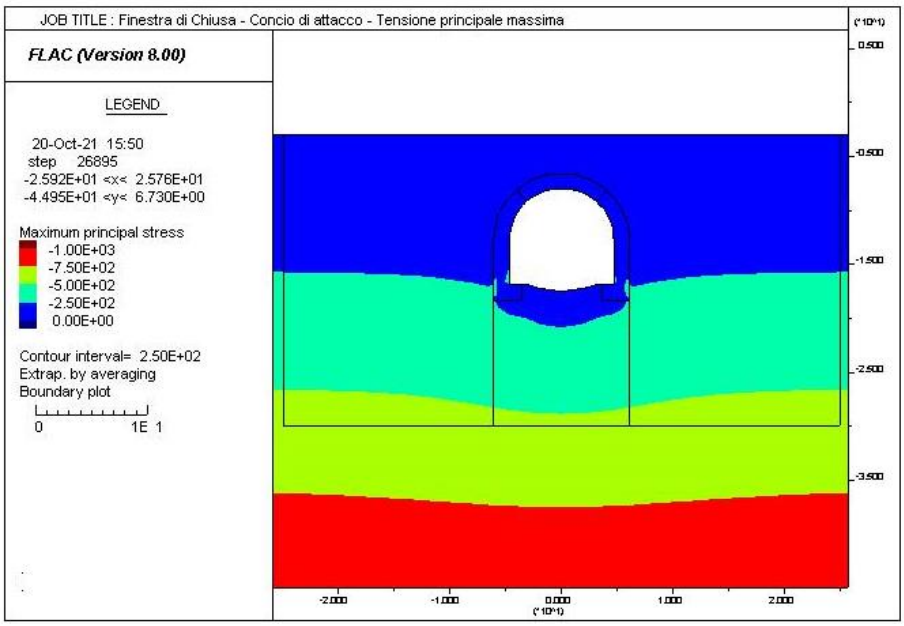

Fig. 59 – Concio di attacco – Tensione principale massima (Fase 3b)

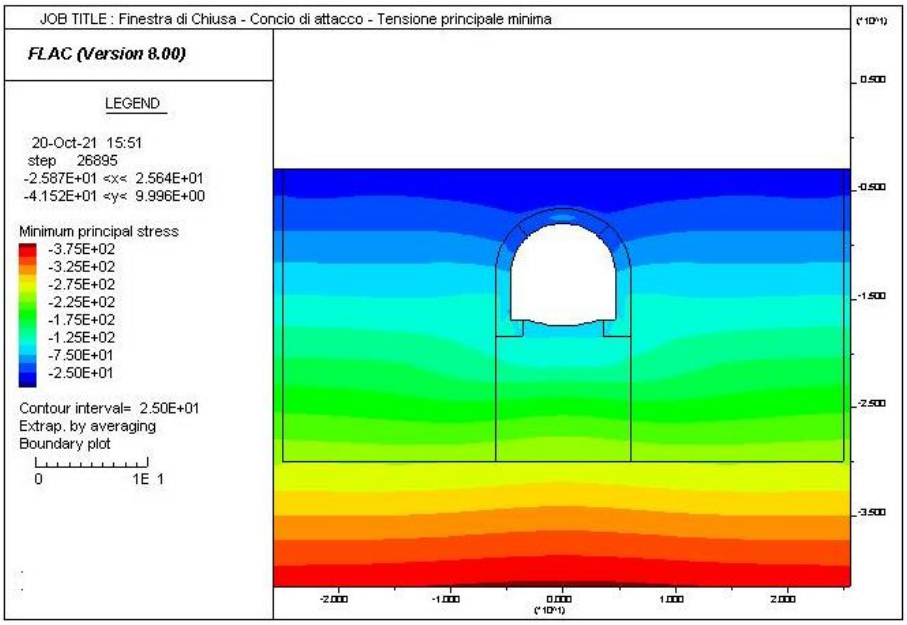

Fig. 60 – Concio di attacco – Tensione principale minima (Fase 3b)

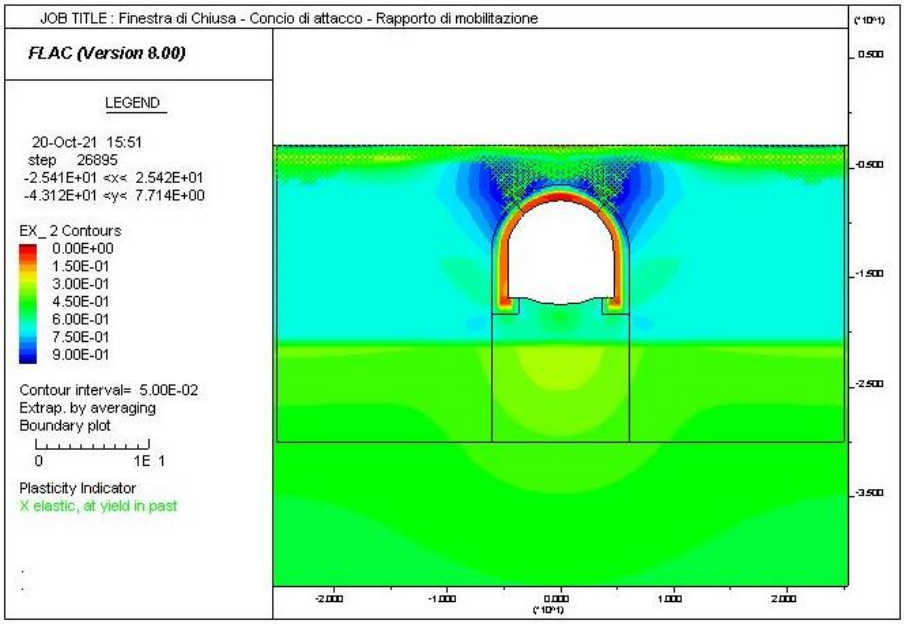

Fig. 61 – Concio di attacco – Rapporto di mobilitazione (Fase 3b)

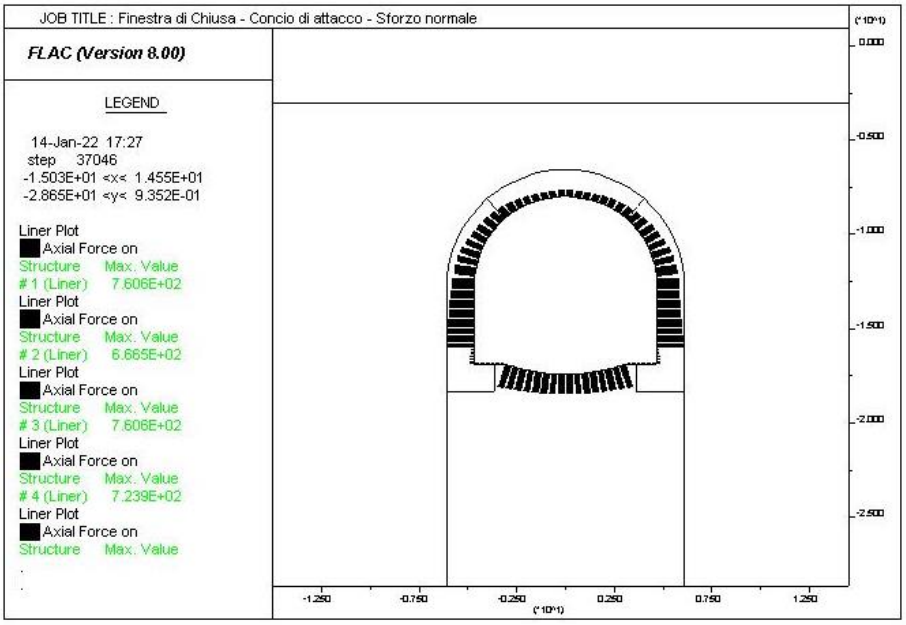

Fig. 62 – Concio di attacco – Sforzo normale (Fase 3b)

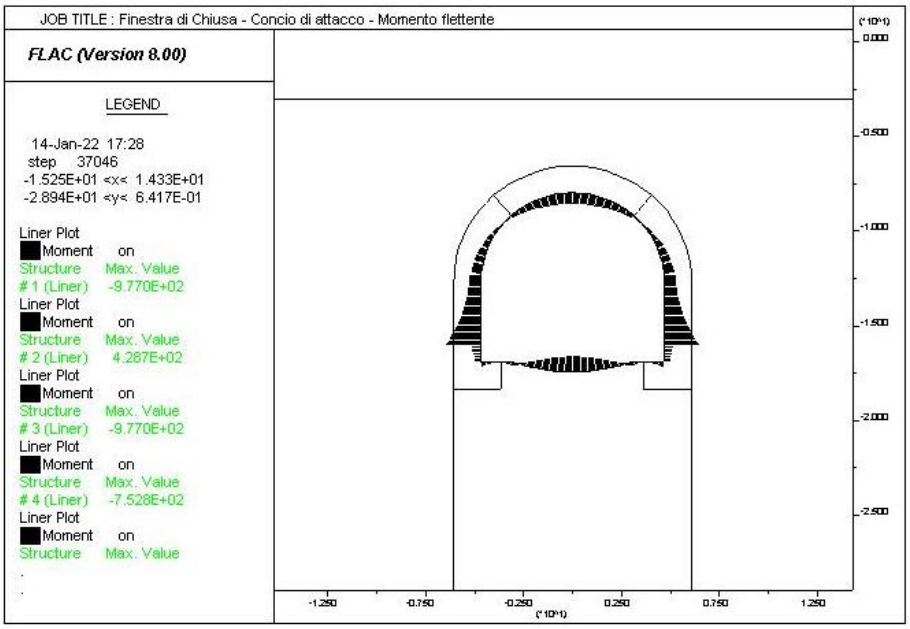

Fig. 63 – Concio di attacco – Momento flettente (Fase 3b)

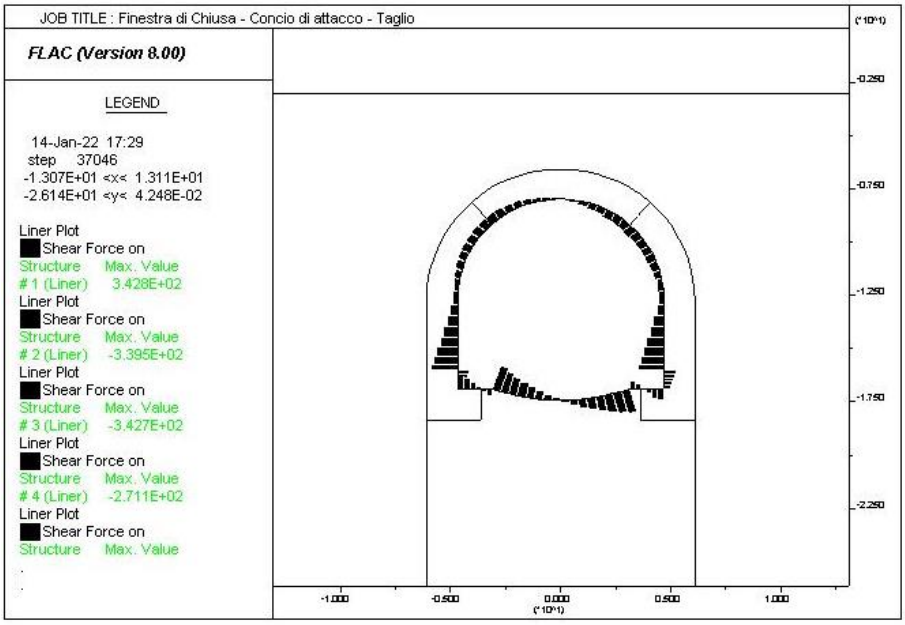

Fig. 64 – Concio di attacco – Taglio (Fase 3b)

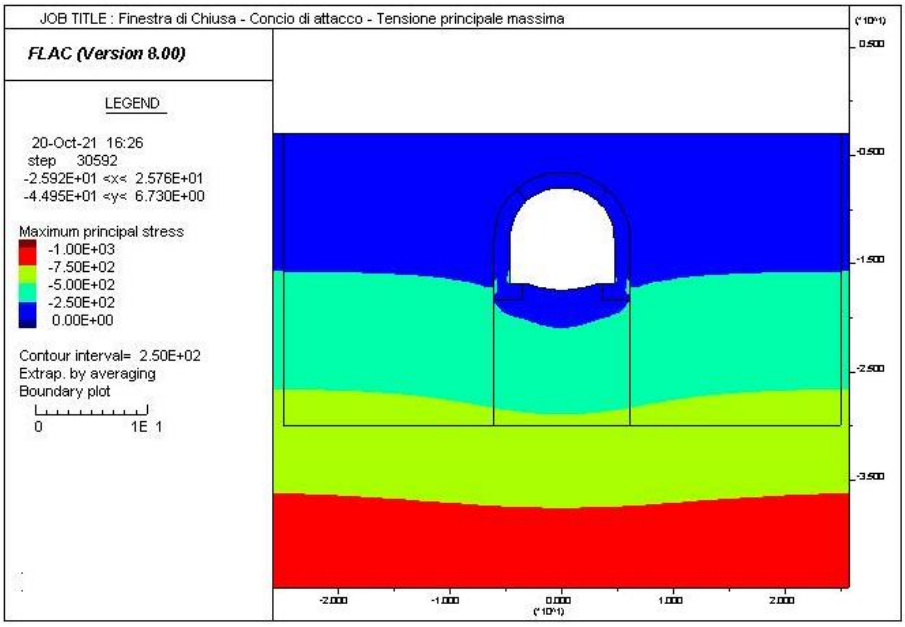

Fig. 65 – Concio di attacco – Tensione principale massima (Fase 4b)

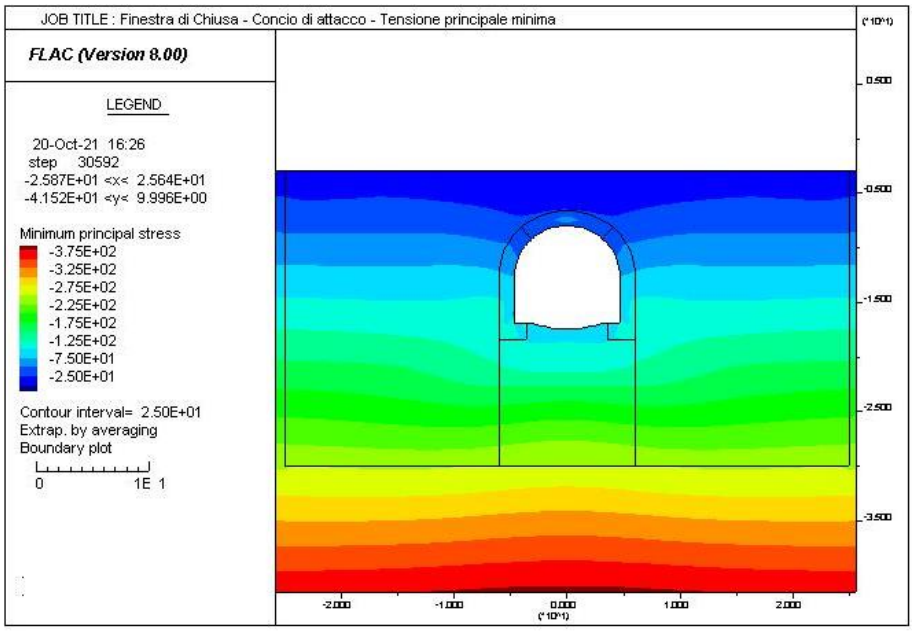

Fig. 66 – Concio di attacco – Tensione principale minima (Fase 4b)

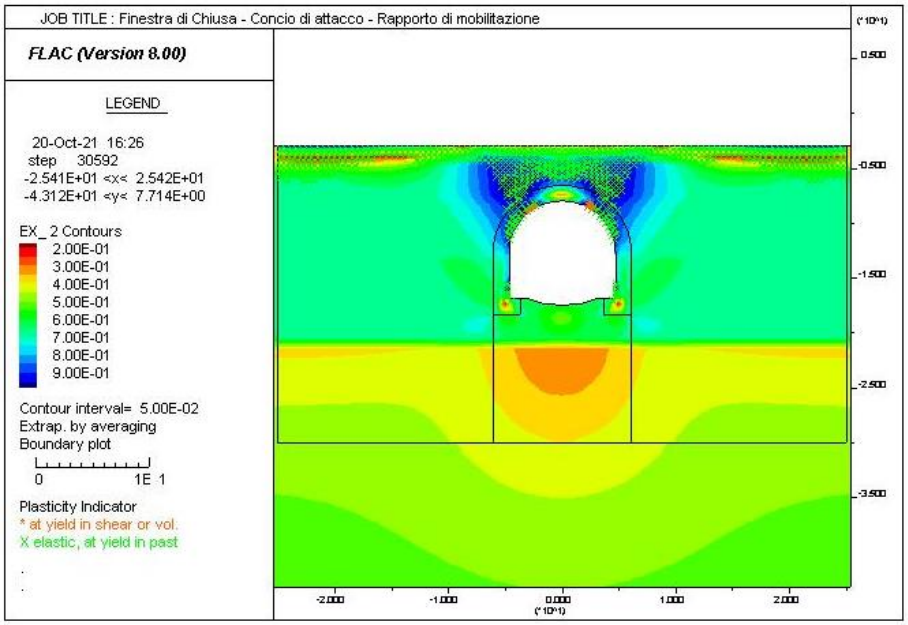

Fig. 67 – Concio di attacco – Rapporto di mobilitazione (Fase 4b)

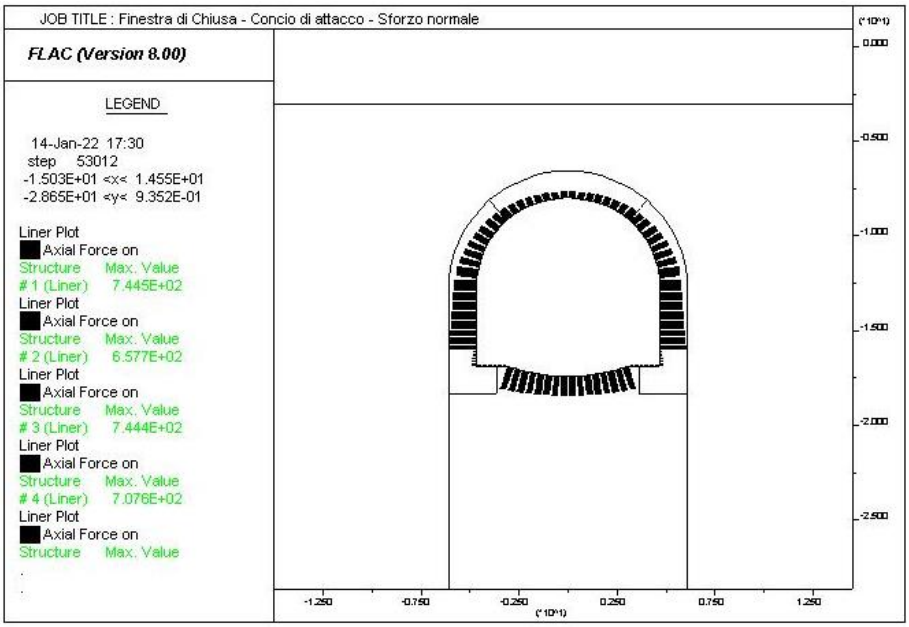

Fig. 68 – Concio di attacco – Sforzo normale (Fase 4b)

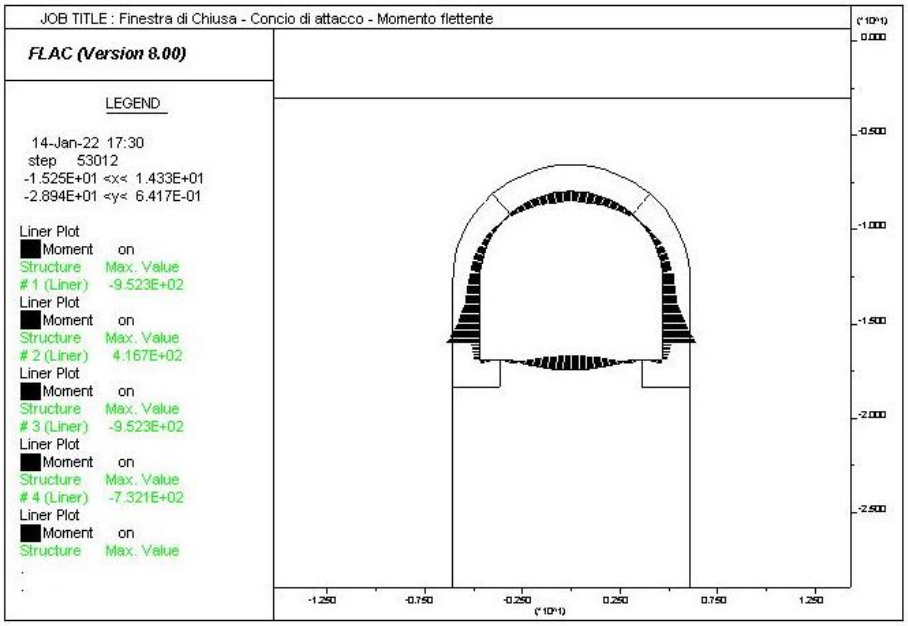

Fig. 69 – Concio di attacco – Momento flettente (Fase 4b)

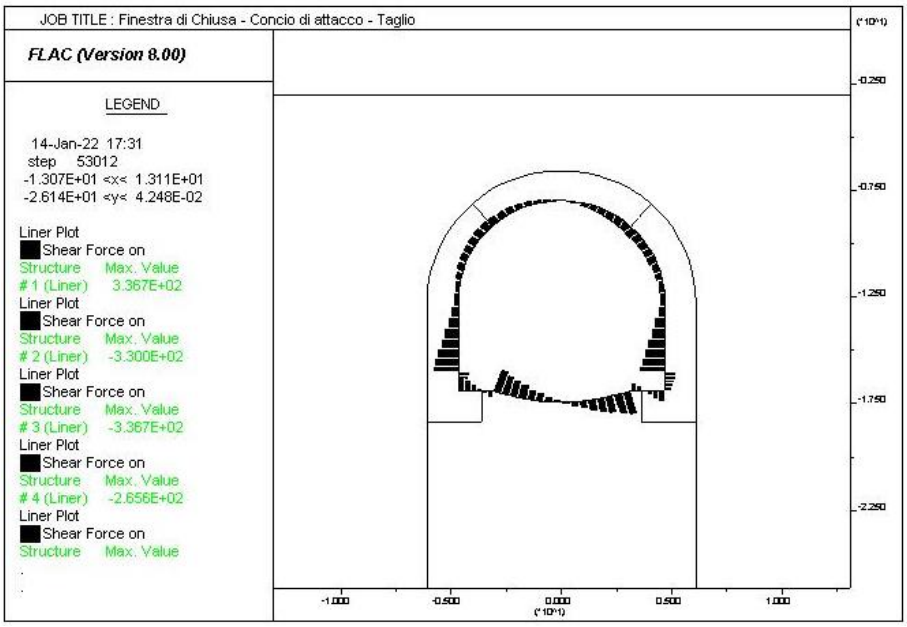

Fig. 70 – Concio di attacco – Taglio (Fase 4b)

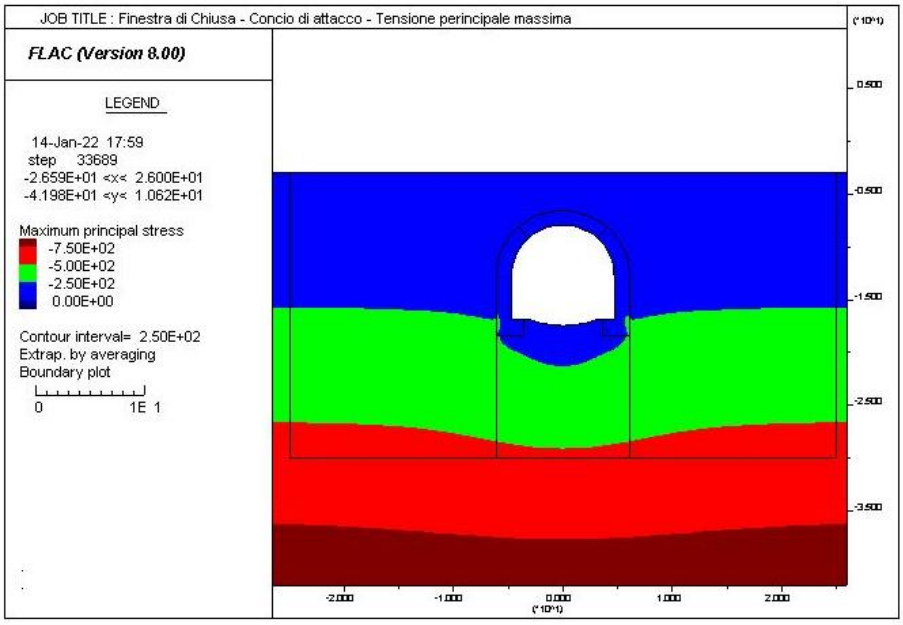

Fig. 71 – Concio di attacco – Tensione principale massima (Fase 4c)

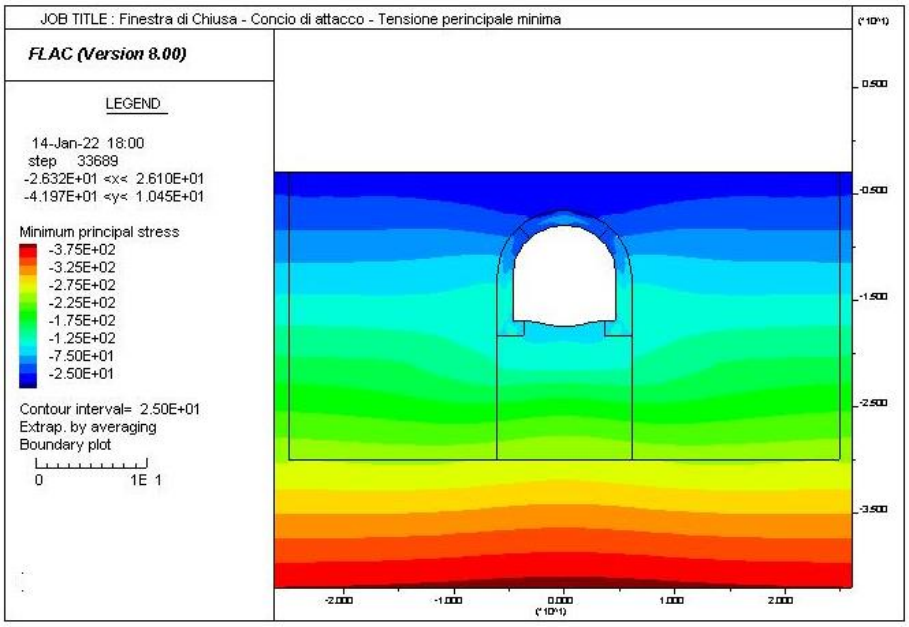

Fig. 72 – Concio di attacco – Tensione principale minima (Fase 4c)

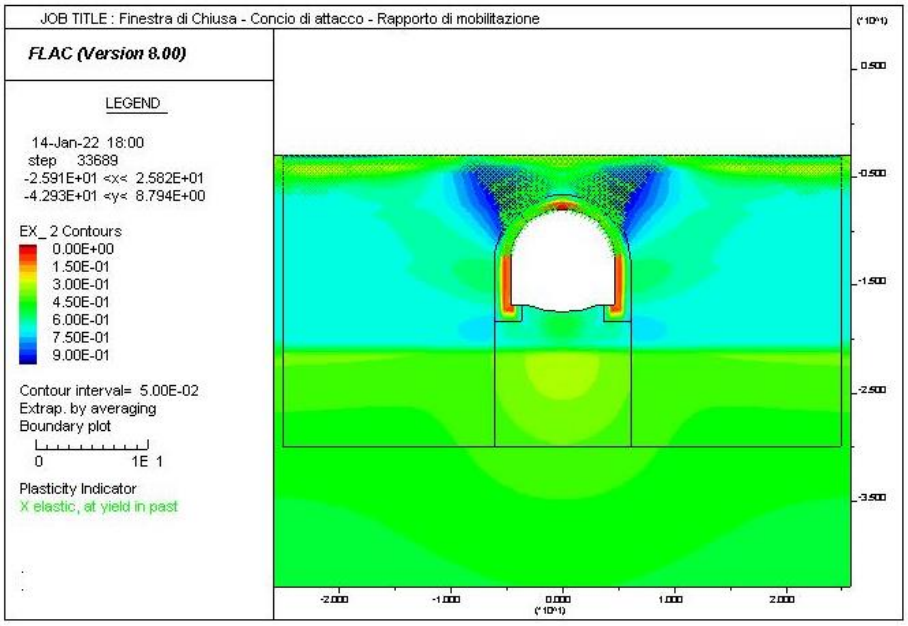

Fig. 73 – Concio di attacco – Rapporto di mobilitazione (Fase 4c)

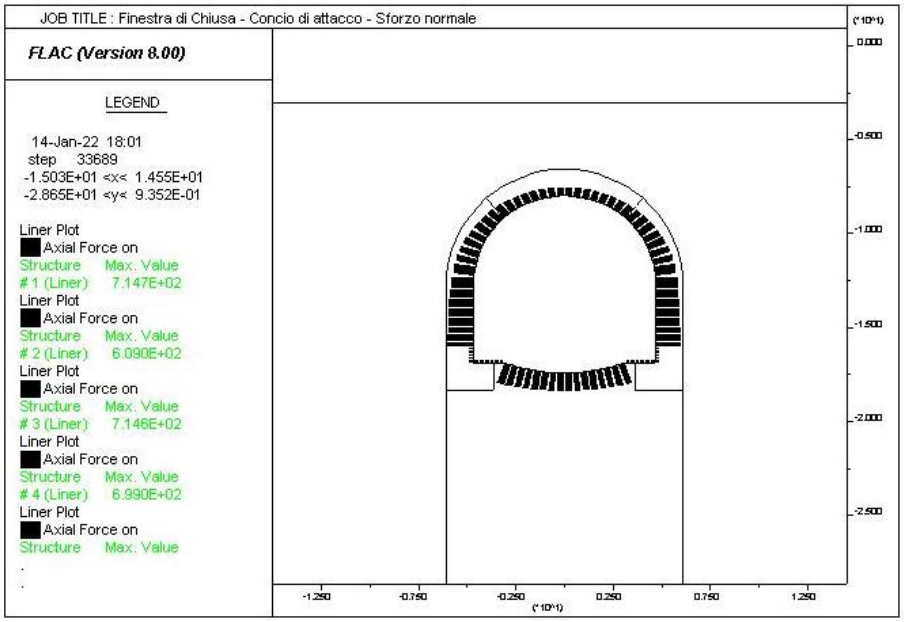

Fig. 74 – Concio di attacco – Sforzo normale (Fase 4c)

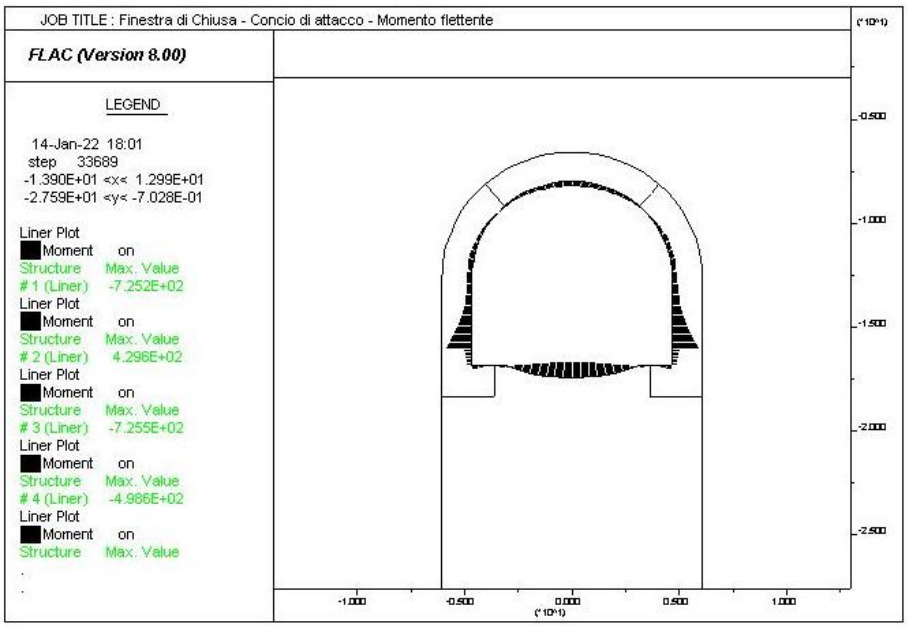

Fig. 75 – Concio di attacco – Momento flettente (Fase 4c)

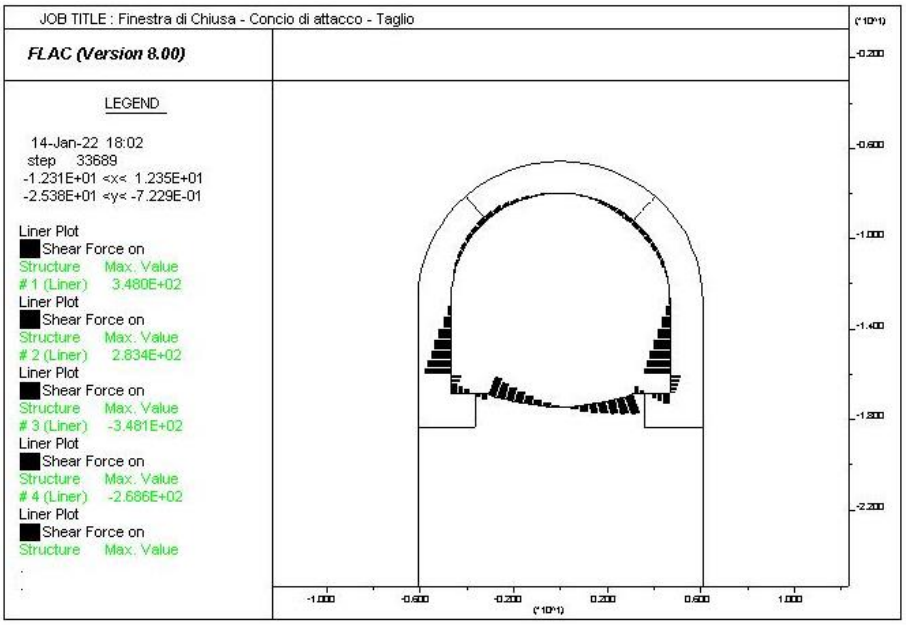

Fig. 76 – Concio di attacco – Taglio (Fase 4c)

Fig. 77 – Diagramma dei cedimenti a piano campagna (Fase 4a)

11. CONCIO DI ATTACCO – VERIFICHE STRUTTURALI

Nel seguito, al §11.1 viene riportata la verifica della stabilità del fronte con il metodo di Tamez, mentre al §11.2 e al§11.3 si riportano, rispettivamente, le verifiche strutturali del rivestimento provvisorio e definitivo.

11.1 STABILITÀ DEL FRONTE

Nel caso di gallerie superficiali la valutazione della stabilità del fronte deve tenere conto della natura tridimensionale del problema e dei possibili meccanismi di rottura del terreno a seguito di operazioni di scavo a breve distanza dal piano campagna.

In relazione alle coperture di progetto, viene individuato, anche in funzione delle caratteristiche geotecniche, il comportamento del fronte fra i tre precedentemente illustrati.

Il metodo dell'equilibrio limite proposto da Tamez tiene conto della riduzione dello stato di confinamento triassiale del nucleo di terreno oltre il fronte per mezzo di un meccanismo di rottura del tipo effetto volta, con il quale il volume di terreno gravante sulla corona della galleria è definito da un paraboloide, approssimato mediante tre solidi prismatici.

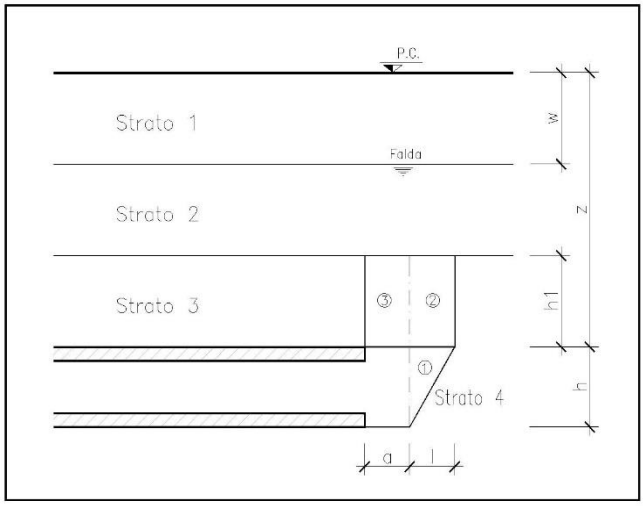

Fig. 78 – Solidi prismatici di Tamez

Il metodo determina le massime tensioni tangenziali che si possono sviluppare sulle facce di ogni prisma senza che avvengano scorrimenti (forze resistenti) e le forze di massa di ogni prisma (forze agenti). Il rapporto tra i momenti delle forze resistenti e delle forze agenti fornisce un coefficiente di sicurezza, denominato FSF (face security factor).

Tuttavia, è possibile che la stabilità del prisma 3, gravante sulla zona di galleria non ancora sostenuta, sia più critica rispetto all'equilibrio complessivo dei tre prismi che approssimano il paraboloide. Sarà pertanto necessario determinare entrambi i coefficienti di sicurezza e considerare il minore dei due.

Generalmente si ritiene accettabile un coefficiente di sicurezza FSF≥2, nel caso in cui si utilizzino i parametri caratteristici di resistenza dei materiali interessati dallo scavo; nel caso in cui si adottino i parametri si progetto si accetta FSF≥1.1.

Si ricorda la formulazione proposta da Tamez per i terreni coesivi e attritivi; i parametri che intervengono sono:

$$l = h \cdot tg\left(45 - \frac{\varphi}{2}\right)$$

$$B = b + 2 \cdot h \cdot tg\left(45 + \frac{\varphi}{2}\right)$$

in cui:

b = larghezza dello scavo

h = altezza dello scavo

σ_c = resistenza a compressione semplice;

c = coesione;

Z = spessore di terreno gravante sulla calotta della galleria;

a = passo di avanzamento;

h_1=Z per gallerie con Z/D<2.5.

Per semplificare i calcoli di verifica il paraboloide viene assimilato a tre prismi aventi volume equivalente, la cui schematizzazione è stata precedentemente riportata, e con questo modello, definite le forze agenti e le forze resistenti, si determina la stabilità del fronte mediante l'espressione generale proposta da Tamez:

$$F_S = \frac{\left[\frac{2\cdot(\tau_{m2} - \tau_{m3})}{\left(1+\frac{a}{l}\right)^2} + 2\cdot\tau_{m3}\right]\cdot\frac{h_1}{b} + \frac{2\cdot\tau_{m3}}{\left(1+\frac{a}{l}\right)\cdot\sqrt{K_A}}\cdot\frac{h_1}{h} + \frac{3.4\cdot c}{\left(1+\frac{a}{l}\right)^2\cdot\sqrt{K_A}}}{\left[1+\frac{2\cdot h}{3\cdot Z\cdot\left(1+\frac{a}{l}\right)^2}\right]\cdot\left[\gamma\cdot Z - P_E\right]}$$

In alcuni casi risulta più gravosa la condizione di stabilità relativa al solo prisma 3, per cui è necessario calcolare anche il seguente coefficiente di sicurezza:

$$F_{S3} = \frac{2\cdot\tau_{m3}}{\gamma\cdot Z - P_E}\left[\frac{h_1}{b}\right]\cdot\left[1+\frac{b}{a}\right]$$

I parametri τ_{m2} e τ_{m3} rappresentano i valori medi delle tensioni di taglio agenti nel terreno lungo le facce dei prismi.

Bisogna distinguere a questo punto tra gallerie superficiali e gallerie profonde, come già illustrato precedentemente.

Per gallerie superficiali (Z/D< 2.5), tali parametri sono assunti pari a:

$$\tau_{m2} = c + \frac{K_0}{2} \cdot \left[\frac{3.4 \cdot c}{\sqrt{K_A}} - \frac{(\gamma - \gamma_w)}{2} \cdot h \right]$$

$$\tau_{m3} = c$$

In Tab. 34 si riportano i parametri geotecnici del terreno naturale, in assenza del consolidamento al fronte, mentre in Tab. 35 si riporta la verifica di stabilità del fronte in assenza di consolidamenti. Da quest'ultima tabella si può osservare come il fattore di sicurezza della stabilità del fronte in assenza di consolidamenti sia inferiore al fattore di sicurezza minimo pari a 2.5.

Calcolo valori medi dei parametri del terreno

TERRENO NON CONSOLIDATO

Strati compresi nell'altezza h1 (potenzialmente instabile)

h_1 [m]	4						
N° strato	**Δz [m]**	**γ_i [kN/m^3]**	**c_i [kPa]**	**ϕ_i [°]**	**γ_i*z_i**	**c_i*z_i**	**ϕ_i*z_i**
Detrito 1	3.2	20	0	27.5	64	0	88
Colonne jet-grouting	0.8	20	432	27.5	16	345.6	22
					0	0	0
					γ_2 [kN/m3]	**c_2 [kPa]**	**ϕ_2 [°]**
				Valori medi	20.00	86.40	27.50

Strati compresi nell'altezza di scavo

h [m]	10.29						
N° strato	**Δz [m]**	**γ_i [kN/m^3]**	**c_i [kPa]**	**ϕ_i [°]**	**γ_i*z_i**	**c_i*z_i**	**ϕ_i*z_i**
Detrito 2	4	20	0	27.5	80	0	110
Detrito 3	4	20	0	28.4	80	0	113.6
Detrito 4	2.29	20	0	29.3	45.8	0	67.097
					γ_1 [kN/m3]	**c_1 [kPa]**	**ϕ_1 [°]**
				Valori medi	20.00	0.00	28.25

Tab. 34 – Concio di attacco, Parametri del terreno in assenza di consolidamento al fronte

Stabilità del fronte di scavo (Tamez '85)

(terreno stratificato in assenza di falda, pressione di contenimento al fronte nulla)

TERRENO NON CONSOLIDATO

Parametri geometrici

Geometria galleria

base	b	9.24	m
altezza	h	9.08	m
profondità	z	5	m
base parabola	B	20.09	m

Parametri di scavo

Avanzamento senza supporto	a	1.0	m

Dimensioni prisma instabile

Lunghezza cuneo instabile	L	5.43	m
Protodyakonov factor	f	0.54	
Altezza di terreno instabile	h_1	5.00	m

Parametri geotecnici

Pesi specifici

Media valori terreno tra la chiave ed h1	γ_1	20.00	kN/m^3
Media valori terreno da scavare	γ_2	20.00	kN/m^3

Coesione

Media valori terreno tra la chiave ed h1	c_2	86.40	kPa
Media valori terreno da scavare	c_1	0.00	kPa

Coefficiente di spinta

Ko	0.527	-
Ko	0.527	-
Ka	0.357	-
Ka	0.357	-

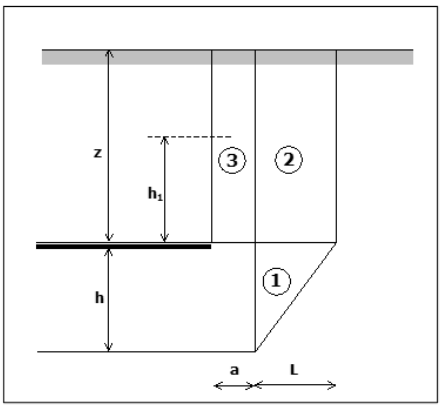

Angolo di attrito terreno da scavare

ϕ 28.25 (°)

Coesione del terreno da scavare

c 0.00 kPa

Sforzo verticale sulla calotta

γZ 100 kPa

Sforzo medio tangenziale sul cuneo 2

τ_{m2} 62.47 kPa

Sforzo medio tangenziale sul cuneo 3

τ_{m3} 86.4 kPa

Sovraccarico a p.c.

q 0 kPa

Pressione di stabilizzazione al fronte

P_E 0 kPa

Coefficiente di sicurezza della stabilità del cavo

FSF 1.12

Coefficiente di sicurezza del prisma numero 3

FSF 9.58

Tab. 35 – Concio di attacco, Verifica di stabilità del fronte di scavo in assenza di consolidamenti al fronte

In Tab. 36 si riportano i parametri geotecnici del terreno in presenza del trattamento colonnare al fronte, mentre in Tab. 37 si riporta la verifica di stabilità del fronte consolidato con colonne di jet grouting. Come si può osservare da quest'ultima tabella il fattore di sicurezza della stabilità del fronte è superiore al fattore di sicurezza minimo pari a 2.5 e, pertanto, l'intervento di consolidamento è sufficiente.

Calcolo valori medi dei parametri del terreno

TERRENO CONSOLIDATO

Strati compresi nell'altezza h1 (potenzialmente instabile)

h_1 [m]	4						
N° strato	**Δz [m]**	**γ_i [kN/m^3]**	**c_i [kPa]**	**ϕ_i [°]**	**γ_i*z_i**	**c_i*z_i**	**ϕ_i*z_i**
Detrito 1	3.2	20	0	27.5	64	0	88
Colonne jet-grouting	0.8	20	432	27.5	16	345.6	22
					γ_1 [kN/m3]	**c_1 [kPa]**	**ϕ_1 [°]**
				Valori medi	20.00	86.40	27.50

Strati compresi nell'altezza di scavo

A_{tot} [m^2]	94.963						
	A_i [m^2]	**γ_i [kN/m^3]**	**c_i [kPa]**	**ϕ_i [°]**	**γ_i*A_i**	**c_i*A_i**	**ϕ_i*A_i**
Detrito 2	31.434	20	57	27.5	628.68	1791.74	864.44
Detrito 3	43.123	20	57	28.4	862.46	2458.01	1224.69
Detrito 4	20.406	20	57	29.3	408.12	1163.14	597.90
					γ_2 [kN/m3]	**c_2 [kPa]**	**ϕ_2 [°]**
				Valori medi	20.00	57.00	28.30

Tab. 36 - Concio di attacco, Parametri del terreno in presenza di consolidamento al fronte

Stabilità del fronte di scavo (Tamez '85)

(terreno stratificato in assenza di falda, pressione di contenimento al fronte nulla)

TERRENO CONSOLIDATO

Parametri geometrici

Geometria galleria

base	b	9.24 m
altezza	h	9.08 m
profondità	z	5 m
base parabola	B	20.08 m

Parametri di scavo

Avanzamento senza supporto	a	1 m

Dimensioni prisma instabile

Lunghezza cuneo instabile	L	5.42 m
Protodyakonov factor	f	0.54
Altezza di terreno instabile	h_1	5.00 m

Parametri geotecnici

Pesi specifici

Media valori terreno tra la chiave ed h1	γ_1	20.00	kN/m^3
Media valori terreno da scavare	γ_2	20.00	kN/m^3

Coesione

Media valori terreno tra la chiave ed h1	c_2	86.40	kPa
Media valori terreno da scavare	c_1	57.00	kPa

Coefficiente di spinta

Ko	0.526	-
Ko	0.526	-
Ka	0.357	-
Ka	0.357	-

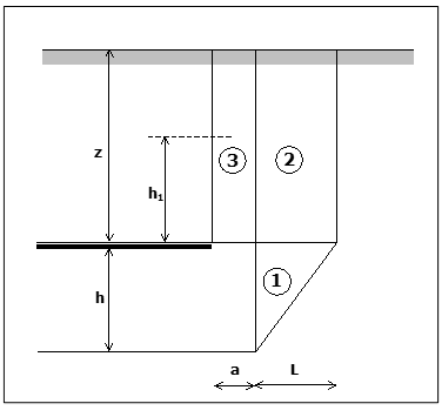

Angolo di attrito terreno da scavare	ϕ	28.30	(°)
Coesione del terreno da scavare	c	57.00	kPa
Sforzo verticale sulla calotta	γZ	100	kPa
Sforzo medio tangenziale sul cuneo 2	τ_{m2}	147.82	kPa
Sforzo medio tangenziale sul cuneo 3	τ_{m3}	86.40	kPa
Sovraccarico a p.c.	q	0	kPa
Pressione di stabilizzazione al fronte	P_E	0	kPa

Coefficiente di sicurezza della stabilità del cavo

FSF 2.72

Coefficiente di sicurezza del prisma numero 3

FSF 9.58

Tab. 37 – Concio di attacco, Verifica di stabilità del fronte di scavo in presenza di consolidamenti al fronte

11.2 VERIFICHE RIVESTIMENTI DI PRIMA FASE

11.2.1 Verifica spritz e centine

Il rivestimento di prima fase del concio di attacco è costituito da centine metalliche accoppiate 2IPN180 a passo 1.0 m e da uno strato di spritz-beton avente spessore di 30 cm. L'analisi numerica è stata condotta attribuendo agli elementi "liner" costituenti il pre-rivestimento le caratteristiche di spessore e modulo elastico della sezione omogeneizzata riportate in Tab. 27.

Le massime sollecitazioni ottenute dall'analisi numerica sono state ripartite tra le due tipologie di sostegni secondo i seguenti criteri:

- Lo sforzo normale N_{tot} è stato ripartito in funzione del rapporto tra le rigidezze assiali (EA) dei due sostegni;
- Il momento flettente M_{tot} è stato attribuito interamente alle centine;
- Lo sforzo di taglio T_{tot} è stato attribuito integralmente alle centine.

Le azioni di calcolo per le verifiche SLU sono state definite a partire dai valori delle caratteristiche della sollecitazione derivanti dall'analisi numerica svolta con γ=1, moltiplicando queste ultime per il coefficiente amplificativo γ_E=1.3 (Combinazione A1+M1 della Normativa).

In ogni sezione di verifica sono state calcolate:

- per l'acciaio di carpenteria:
  - le tensioni normali ai lembi delle centine ($\sigma_{max,cent}$ e $\sigma_{min,cent}$)
  - la tensione tangenziale agente sulla sola anima del profilato ($\tau_{max,cent}$)
  - la tensione ideale massima agente nel profilato ($\sigma_{id,cent}$)
- per il calcestruzzo proiettato:
  - le tensioni normali ai lembi del calcestruzzo ($\sigma_{max,sb}$ e $\sigma_{min,sb}$)

Per ciascuna sezione si è verificato che la tensione in corrispondenza dei lembi maggiormente sollecitati risulti sempre al di sotto del rispettivo limite di resistenza per entrambi i materiali.

Nella seguente tabella sono sintetizzate le ipotesi assunte alla base del calcolo e le formule utilizzate per la ripartizione delle sollecitazioni e la determinazione delle tensioni nei due materiali.

Le verifiche sono state eseguite con riferimenti alla fase 4a che corrisponde all'installazione del rivestimento di prima fase (si veda Tab. 33).

Sollecitazioni		Ripartizione		Calcolo	
		centine	spritz	Centine	Spritz
Sforzo normale	N_{tot}	X	X	$N_{cen} = \frac{E_{acc} \cdot A_{cen}/d}{E_{eq} \cdot s_{eq}} \cdot N_{tot} \cdot d$	$N_{sb} = N_{tot} - \frac{N_{cen}}{d}$
Momento flettente	M_{tot}	X		$M_{cen} = M_{tot} \cdot d$	
Sforzo di taglio	T_{tot}	X		$T_{cen} = T_{tot} \cdot d$	
Tensioni				$\sigma_{\max,cen} = +\frac{N_{cen}}{A_{cen}} + \frac{M_{cen}}{W_{cent}}$ $\sigma_{\min,cen} = +\frac{N_{cen}}{A_{cen}} - \frac{M_{cen}}{W_{cent}}$ $\tau_{\min,cen} = \frac{T_{cen}}{h \cdot a}$ $\sigma_{id,cent} = \sqrt{\sigma^2_{\max,cent} + 3\tau^2_{\max,cent}}$	$\sigma_{\max,sb} = \frac{N_{sb}}{s}$

E_{cls}	modulo elastico del calcestruzzo proiettato
s	spessore del calcestruzzo proiettato
E_{acc}	modulo elastico dell'acciaio
A_{cen}	area delle centine
d	interasse tra le centine
a	spessore dell'anima del profilato
E_{eq}	modulo elastico del rivestimento equivalente costituito da spritz e centine
s_{eq}	spessore del rivestimento equivalente costituito da spritz e centine
N_{tot}	sforzo normale agente sul rivestimento equivalente
N_{cent}	sforzo normale agente sulle centine
N_{sb}	sforzo normale agente sullo spritz beton
M_{tot}	momento flettente agente sul rivestimento equivalente
M_{cent}	momento flettente agente sulle centine
T_{tot}	sforzo di taglio agente sul rivestimento equivalente
T_{cent}	sforzo di taglio agente sulle centine
$\sigma_{max,cent}$	tensione massima nelle centine
$\sigma_{min,cent}$	tensione minima nelle centine
$\tau_{max,cent}$	tensione tangenziale massima nelle centine
$\sigma_{id,cent}$	tensione ideale nelle centine
$\sigma_{max,sb}$	tensione massima nello spritz beton
$\sigma_{min,sb}$	tensione minima nello spritz beton

Tab. 38 – Concio di attacco, Formulazione per la verifica del rivestimento di prima fase

		Sollecitazioni da analisi numerica			Sollecitazioni di calcolo		
Fase	**Sezione**	**N [kN/m]**	**M [kNm/m]**	**T [kN/m]**	**$N_{Ed} = \gamma_E \cdot N$ [kN/m]**	**$M_{Ed} = \gamma_E \cdot M$ [kNm/m]**	**$T_{Ed} = \gamma_E \cdot T$ [kN/m]**
Fase 4a	M_{max}	158.8	58.2	5.5	206.4	75.6	7.1
	N_{max}	418.4	28.0	2.0	543.9	36.3	2.6
	T_{max}	101.0	9.5	59.0	131.3	12.3	76.6

Tab. 39 – Concio di attacco, Sollecitazioni rivestimento di prima fase

Nelle seguenti tabelle sono sintetizzati i risultati delle verifiche con riferimento ai risultati delle analisi numeriche. Come si può osservare, i rivestimenti di prima fase risultano verificati poiché sono rispettate le seguenti condizioni:

$\sigma_{max,sb} \leq f_{cb}$

$\sigma_{id,cent} \leq f_{yd}$

VERIFICA DEL RIVESTIMENTO DI PRIMA FASE

NORMATIVA DI RIFERIMENTO: DM 2008

LAVORO:	**Linea Fortezza - Ponte Gardena**
Galleria:	Finestra di Chiusa - Concio di attacco
FASE:	Fase_4a: Prerivestimento

MATERIALI

Spritz Beton			
Classe	C25/30		*Classe dello spritz beton*
R_{ck}	30	[MPa]	*Resistenza a compressione cubica caratteristica dello spritz beton*
γ_c	1.5	[-]	*Coefficiente parziale resistenza*
f_{ck}	24.90	[MPa]	*Resistenza a compressione cilindrica caratteristica dello spritz beton*
f_{cd}	14.11	[MPa]	*Resistenza di calcolo a compressione dello spritz beton*
f_{ctm}	-1.19	[MPa]	*Resistenza di calcolo a trazione dello spritz beton*
B	100	[cm]	*Base della sezione di spritz beton*
s	30	[cm]	*Altezza della sezione di spritz beton*
A_{sb}	3000	[cm^2]	*Area della sezione di spritz beton*
I_{sb}	225000	[cm^4]	*Momento di inerzia della sezione di spritz beton*
W_{sb}	15000	[cm^3]	*Momento resistente della sezione di spritz beton*
E_{sb}	31447	[MPa]	*Modulo di elasticità dello spritz beton*

Centine			
Tipo	S275		*Tipologia acciaio*
Profilato	IPN180		*Tipologia centine*
γ_s	1.05	[-]	*Coefficiente parziale resistenza*
N.	2	[-]	*Numero centine*
f_y	275	[MPa]	*Tensione di snervamento dell'acciaio*
f_{yd}	261.9	[MPa]	*Massima tensione nell'acciaio*
A_{cent}	27.9	[cm^2]	*Area del profilato*
I_{cent}	1444	[cm^4]	*Momento di inerzia del profilato*
W_{cent}	161	[cm^3]	*Momento resistente del profilato*
h_{cent}	180	[mm]	*Altezza profilato*
a	6.9	[mm]	*Spessore dell'anima del profilato*
d	1.0	[m]	*Interasse longitudinale tra le centine*
E_{cent}	210000	[MPa]	*Modulo di elasticità dell'acciaio*

Rivestimento equivalente			
s_{eq}	30	[cm]	*Spessore equivalente*
E_{eq}	35295	[MPa]	*Modulo di elasticità equivalente*

VERIFICA DEL RIVESTIMENTO DI PRIMA FASE

NORMATIVA DI RIFERIMENTO: DM 2008

LAVORO:	**Linea Fortezza - Ponte Gardena**
Galleria:	Finestra di Chiusa - Concio di attacco
FASE:	Fase_4a: Prerivestimento

SOLLECITAZIONI

Sollecitazioni da calcolo numerico			
Sezione	N	T	M
	[kN/m]	[kN/m]	[kNm/m]
M_{max}	206.4	75.6	7.1
N_{max}	543.9	36.3	2.6
T_{max}	131.3	12.3	76.6

VERIFICHE

Verifica centine							
N_{cent}	T_{cent}	M_{cent}	$\sigma_{max,cent}$	$\sigma_{min,cent}$	τ_{cent}	σ_{id}	Verifica
[kN]	[kN]	[kNm]	[MPa]	[MPa]	[MPa]	[MPa]	
23.2	75.60	7.10	26.2	-17.9	30.4	58.9	OK
61.1	36.30	2.60	19.0	2.9	14.6	31.7	OK
14.8	12.30	76.60	240.5	-235.2	5.0	240.7	OK

Verifica spritz beton		
N_{spritz}	$\sigma_{max,sb}$	Verifica
[kN]	[MPa]	
183	0.61	OK
483	1.61	OK
117	0.39	OK

ESITO VERIFICHE

Verifica presso-flessione		Verifica taglio	Verifica σ_{id}
centine	spritz	centine	centine
si	si	si	si
si	si	si	si
si	si	si	si

11.2.2 Verifica presostegno al contorno

L'intervento di presostegno è costituito da 19 tubi in acciaio Ø127 mm e spessore 10 mm, ad interasse trasversale variabile 0.4÷0.64 m, di lunghezza L=16 m (con sovrapposizione minima di 5.0 m).

La verifica degli infilaggi dell'intervento di presostegno è effettuata allo SLU, tramite il momento di progetto valutato come al § 7.1.2, amplificato per il coefficiente parziale pari a 1.3. Il carico p_v agente sull'ombrello di infilaggi è stato valutato con la teoria di Terzaghi per gallerie superficiali considerando 5 m di copertura. La verifica è effettuata tramite il confronto tra momento sollecitante e resistente: il momento resistente plastico è dato dalla tensione resistente di progetto f_{yd} per il modulo di resistenza plastico W_{pl}. Essendo il momento resistente M_{Rd} non inferiore al momento sollecitante di progetto M_{sd}, le verifiche risultano soddisfatte. I valori sono riportati in Tab. 40.

Verifica struttura infilaggio	
Tipologia: diam. 127 mm, sp. 10 mm	
Diametro esterno tubi [mm] =	127.0
Spessore tubi [mm] =	10.0
Area tubo [cm2] =	36.76
Interasse centine [m] =	1.00
Interasse tubi [m] =	0.64
Luce non rivestita [m] =	0.50
Immorsamento [m] =	0.70
Pressione in calotta [kPa] =	92.63
Tensione f_{yk} acciaio [MPa] =	275
Coefficiente di sicurezza γ_{M0} =	1.05
Tensione f_{yd} acciaio [MPa] =	261.9
Pressione sull'infilaggio [kPa] =	69.47
Carico agente sul tubo [kN/m] =	44.46
L di calcolo [m] =	2.20
Momento di progetto M_{sd} [kN*m] =	23.31
Modulo resistente W_{pl} [cm^3] =	99.77
Momento resistente M_{Rd} [kN*m] =	26.13
MRd/Msd >1	
VERIFICATO	

R esterno	63.5	mm
R interno	53.50	mm

Fe	f_{yk} [MPa]	σ_{adm} [MPa]
360	> 235	160
430	> 275	190
510	> 355	240

Lunghezza tubi [m] =	16.00
Sovrapposizione [m] =	5.00
Coeff. x metro di avanzam [-] =	1.45

CARICHI IN CALOTTA (teoria di Terzaghi - gallerie superficiali)

Caratteristiche geotecniche		
ϕ	33.2	°
c	0	kPa
γ	20	kN/m3
k_0	0.45	-

Caratteristiche geometriche			
b tunnel	9.24	m	(Larghezza scavo ai piedritti)
h tunnel	9.08	m	(Da base piedritto a estradosso calotta)
Hc	5	m	(Hc<2.5B) **47.63**
H totale	14.08	m	
B	19.05	m	

Sovraccarico a quota p.c.		
q	0	kPa

Carico verticale in calotta		
σ_z	100.0	kPa
$\sigma_{z\text{-Terzaghi}}$	**92.6**	kPa

$$\sigma_{z,Terzaghi} = \frac{B(\gamma - \frac{2c}{B})}{2k_0 tan\phi}\left(1 - e^{-k_0 tan\phi \frac{2H_c}{B}}\right) + qe^{-k_0 tan\phi \frac{2H_c}{B}}$$

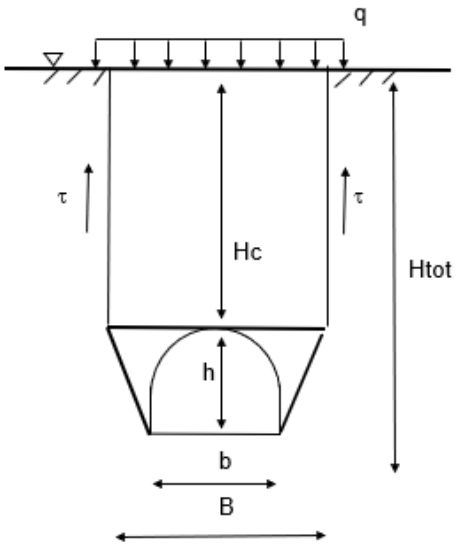

Tab. 40. Verifica degli infilaggi

11.3 VERIFICHE RIVESTIMENTI DEFINITIVI

La verifica delle sezioni degli elementi strutturali è condotta, in accordo con la vigente normativa, secondo il metodo degli stati limite, verificando la corrispondenza delle sezioni allo stato limite ultimo S.L.U. ed agli stati limite di esercizio S.L.E.

Le azioni di calcolo per le verifiche S.L.U. sono definite a partire dai valori delle caratteristiche della sollecitazione derivanti dalle analisi svolte con γ=1.0, moltiplicando queste ultime per il coefficiente amplificativo γ_E=1.3 (Combinazione A1+M1 della Normativa vigente).

Le verifiche strutturali sono eseguite secondo il metodo agli Stati Limite di Esercizio per la verifica a fessurazione e secondo il metodo agli Stati Limite Ultimi per le verifiche a pressoflessione e taglio, nelle sezioni caratteristiche del rivestimento.

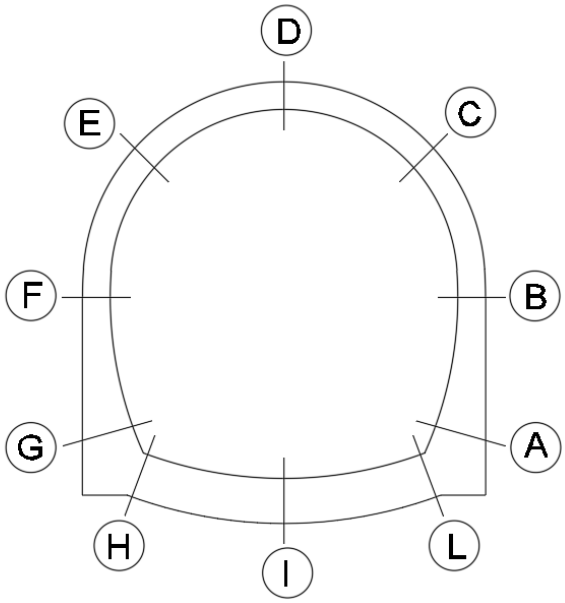

Fig. 79 – Concio di attacco, Sezioni di verifica del rivestimento definitivo

Le tabelle seguenti riportano le verifiche strutturali condotte in ciascuna sezione rappresentativa in accordo con Fig. 79, in fase 3b e 4b in accordo con Tab. 33.

11.3.1 Verifiche allo Stato Limite di Esercizio (S.L.E.)

Per le verifiche di fessurazione (S.L.E) si è assunto un valore limite di apertura delle fessure pari a w_k=0.30mm, in accordo con quanto prescritto dalla Normativa vigente.

Il copriferro netto utilizzato nelle verifiche è pari a 5 cm. Il copriferro nominale è di 3.5 cm.

Come si osserva in Tab. 41 le verifiche S.L.E del rivestimento definitivo sono tutte soddisfatte.

Fase	Sezione	H [cm]	As (tesa)	A's (compr)	N [kN]	M [kNm]	w_k [mm]	σ_{cls} [MPa]	σ_s [MPa]
Fase 3b	A	145.3	1ϕ20/10	1ϕ20/20	741.7	872.1	-	-4.2	116.6
	B	110.0	1ϕ20/10	1ϕ20/20	635.1	336.1	-	-2.6	35.6
	C	110.0	1ϕ20/10	1ϕ20/20	357	-15.1	-	-0.4	-3.6
	D	110.0	1ϕ20/10	1ϕ20/20	178.6	-311.6	-	-2.4	80
	E	110.0	1ϕ20/10	1ϕ20/20	357	-67.8	-	-0.6	-0.6
	F	110.0	1ϕ20/10	1ϕ20/20	635.2	300.4	-	-2.3	26.3

	G	145.3	1ϕ20/10	1ϕ20/20	741.8	752.8	-	-3.6	88.8
	H	90.0	1ϕ20/10	1ϕ20/20	641.5	-6.4	-	-0.7	-9
	I	90.0	1ϕ20/10	1ϕ20/20	562	428.7	0.13	-4.8	104.9
	L	90.0	1ϕ20/10	1ϕ20/20	666.5	-6.3	-	-0.8	-9.4
Fase 4b	A	145.3	1ϕ20/10	1ϕ20/20	725.2	849.2	-	-4.1	113.2
	B	110.0	1ϕ20/10	1ϕ20/20	620.6	327.0	-	-2.5	34.4
	C	110.0	1ϕ20/10	1ϕ20/20	362.5	-15.0	-	-0.4	-3.6
	D	110.0	1ϕ20/10	1ϕ20/20	189.4	-303.4	-	-2.4	75.8
	E	110.0	1ϕ20/10	1ϕ20/20	362.5	-67.3	-	-0.6	-0.7
	F	110.0	1ϕ20/10	1ϕ20/20	620.7	293.7	-	-2.3	25.7
	G	145.3	1ϕ20/10	1ϕ20/20	725.3	732.2	-	-3.5	85.9
	H	90.0	1ϕ20/10	1ϕ20/20	633.4	-5.3	-	-0.7	-9.0
	I	90.0	1ϕ20/10	1ϕ20/20	556.5	416.7	-	-4.7	100.7
	L	90.0	1ϕ20/10	1ϕ20/20	657.7	-5.2	-	-0.8	-9.4

Tab. 41 – Concio di attacco, Verifiche allo Stato Limite di Esercizio del rivestimento definitivo (sezione media)

Fase	Sezione	H [cm]	As (tesa)	A's (compr)	N [kN]	M [kNm]	w_k [mm]	σ_{cls} [MPa]	σ_s [MPa]
Fase 4c	A	120.0	1ϕ20/10	1ϕ20/20	706.7	498.3	-	-3.3	61.9
	B	55.0	1ϕ20/10	1ϕ20/20	630.6	129.4	-	-3.7	21.9
	C	55.0	1ϕ20/10	1ϕ20/20	413.4	-16.8	-	-1.0	-6.6
	D	55.0	1ϕ20/10	1ϕ20/20	239.1	-141.1	-	-3.9	72.5
	E	55.0	1ϕ20/10	1ϕ20/20	413.2	13.0	-	-0.9	-7.2
	F	55.0	1ϕ20/10	1ϕ20/20	630.4	132.4	-	-3.8	23.6
	G	120.0	1ϕ20/10	1ϕ20/20	706.5	619.0	-	-4.2	95.6
	H	90.0	1ϕ20/10	1ϕ20/20	608.9	82.1	-	-1.2	-2.3
	I	90.0	1ϕ20/10	1ϕ20/20	516.9	429.6	0.14	-4.8	110.5
	L	90.0	1ϕ20/10	1ϕ20/20	586.4	81.8	-	-1.2	-2.6

Tab. 42 - Concio di attacco, Verifiche allo Stato Limite di Esercizio del rivestimento definitivo (sezione minima)

11.3.2 Verifiche a presso-flessione allo Stato Limite Ultimo (S.L.U)

Nelle tabelle seguenti si riportano le verifiche allo Stato Limite Ultimo delle sezioni più rappresentative dello stato tensionale agente sul rivestimento. I valori delle sollecitazioni di calcolo sono ottenuti amplificando mediante un coefficiente pari a 1.3 le sollecitazioni della combinazione SLE più gravosa.

Il copriferro adottato nelle verifiche è pari a 5.0 cm, considerando un copriferro nominale di 3.5 cm.

Come si può osservare in Tab. 43 e in Tab. 44 le verifiche sono tutte soddisfatte.

Fase	Sezione	H [cm]	As (tesa)	A's (compr)	N_{Sd} [kN/m]	M_{Sd} [kNm/m]	M_{Rd} [kNm/m]	M_{Rd}/M_{Sd} [-]
Fase 3b	A	145.3	1ϕ20/10	1ϕ20/20	964.2	1133.7	2247.2	2
	B	110.0	1ϕ20/10	1ϕ20/20	825.6	436.9	1587.7	3.6
	C	110.0	1ϕ20/10	1ϕ20/20	464.1	-19.6	1422.1	72.7
	D	110.0	1ϕ20/10	1ϕ20/20	232.2	-405.1	1313.1	3.2
	E	110.0	1ϕ20/10	1ϕ20/20	464.1	-88.2	1422.1	16.1
	F	110.0	1ϕ20/10	1ϕ20/20	825.8	390.5	1587.8	4.1
	G	145.3	1ϕ20/10	1ϕ20/20	964.3	978.6	2247.3	2.3
	H	90.0	1ϕ20/10	1ϕ20/20	834.0	-8.3	1257.4	151.2
	I	90.0	1ϕ20/10	1ϕ20/20	730.6	557.3	1221.9	2.2
	L	90.0	1ϕ20/10	1ϕ20/20	866.5	-8.2	1268.6	155.5
Fase 4b	A	145.3	1ϕ20/10	1ϕ20/20	942.8	1104	2233.8	2.0
	B	110.0	1ϕ20/10	1ϕ20/20	806.8	425.1	1580	3.7
	C	110.0	1ϕ20/10	1ϕ20/20	471.3	-19.5	1425.4	73.2
	D	110.0	1ϕ20/10	1ϕ20/20	246.2	-394.4	1319.7	3.3
	E	110.0	1ϕ20/10	1ϕ20/20	471.3	-87.5	1425.4	16.3
	F	110.0	1ϕ20/10	1ϕ20/20	806.9	381.8	1580	4.1
	G	145.3	1ϕ20/10	1ϕ20/20	942.9	951.9	2233.9	2.3
	H	90.0	1ϕ20/10	1ϕ20/20	823.4	-6.9	1253.8	181.1
	I	90.0	1ϕ20/10	1ϕ20/20	723.5	541.7	1219.4	2.3
	L	90.0	1ϕ20/10	1ϕ20/20	855	-6.8	1264.7	185.3

Tab. 43 – Concio di attacco, Verifiche allo Stato Limite Ultimo del rivestimento definitivo (sezione media)

Fase	Sezione	H [cm]	As (tesa)	A's (compr)	N_{Sd} [kN/m]	M_{Sd} [kNm/m]	M_{Rd} [kNm/m]	M_{Rd}/M_{Sd} [-]
Fase 4c	A	120.0	1ϕ20/10	1ϕ20/20	918.7	647.8	1799.9	2.8
	B	55.0	1ϕ20/10	1ϕ20/20	819.8	168.2	683.0	4.1
	C	55.0	1ϕ20/10	1ϕ20/20	537.4	-21.9	632.4	28.9
	D	55.0	1ϕ20/10	1ϕ20/20	310.8	-183.4	591.8	3.2
	E	55.0	1ϕ20/10	1ϕ20/20	537.2	16.9	632.3	37.4
	F	55.0	1ϕ20/10	1ϕ20/20	819.5	172.1	682.9	4.0
	G	120.0	1ϕ20/10	1ϕ20/20	918.5	804.7	1799.8	2.2
	H	90.0	1ϕ20/10	1ϕ20/20	762.3	106.7	1232.8	11.6
	I	90.0	1ϕ20/10	1ϕ20/20	672.0	558.5	1201.7	2.2
	L	90.0	1ϕ20/10	1ϕ20/20	791.7	106.3	1242.9	11.7

Tab. 44 – Concio di attacco, Verifiche allo Stato Limite Ultimo del rivestimento definitivo (sezione minima)

11.3.3 Verifiche a taglio allo Stato Limite Ultimo (S.L.U)

Nelle tabelle seguenti si riportano le verifiche allo SLU delle sezioni più significative. I valori delle sollecitazioni di calcolo sono ottenuti amplificando mediante un coefficiente pari ad 1.3 le sollecitazioni della combinazione SLE più gravosa. Il copriferro adottato nelle verifiche è pari a 5.0 cm, considerando un copriferro nominale di 3.5 cm.

Come si può osservare in Tab. 45 e in Tab. 46 le verifiche sono tutte soddisfatte.

Fase	Sezione	H [cm]	As (tesa)	V_{Sd} [kN/m]	V_{Rdc} [kN/m]	V_{Rds} [kN/m]	A_{st}	$V_{Rds,max}$ [kN/m]
Fase 3b	A	145.3	1ϕ20/10	-402.1	528.1	412.9	ϕ10/40x40	4096.6
	B	110.0	1ϕ20/10	-73.2	425.6	307.2	ϕ10/40x40	3047.9
	C	110.0	1ϕ20/10	-160.7	375.1	307.2	ϕ10/40x40	3047.9
	D	110.0	1ϕ20/10	-13.3	342.6	307.2	ϕ10/40x40	3047.9
	E	110.0	1ϕ20/10	160.6	375.1	307.2	ϕ10/40x40	3047.9
	F	110.0	1ϕ20/10	73.2	425.7	307.2	ϕ10/40x40	3047.9
	G	145.3	1ϕ20/10	402.1	528.1	412.9	ϕ10/40x40	4096.6

	H	90.0	1ϕ20/10	-379.1	377.7	494.6	ϕ10/20x40	2453.8
	I	90.0	1ϕ20/10	26.9	363.5	494.6	ϕ10/20x40	2453.8
	L	90.0	1ϕ20/10	441.4	382.2	494.6	ϕ10/20x40	2453.8
Fase 4b	A	145.3	1ϕ20/10	-394.4	525	412.9	ϕ10/40x40	4096.6
	B	110.0	1ϕ20/10	-68.1	423	307.2	ϕ10/40x40	3047.9
	C	110.0	1ϕ20/10	-159.1	376.1	307.2	ϕ10/40x40	3047.9
	D	110.0	1ϕ20/10	-12.7	344.6	307.2	ϕ10/40x40	3047.9
	E	110.0	1ϕ20/10	159.1	376.1	307.2	ϕ10/40x40	3047.9
	F	110.0	1ϕ20/10	68.1	423	307.2	ϕ10/40x40	3047.9
	G	145.3	1ϕ20/10	394.4	525	412.9	ϕ10/40x40	4096.6
	H	90.0	1ϕ20/10	-367.9	376.3	494.6	ϕ10/20x40	2453.8
	I	90.0	1ϕ20/10	26	362.5	494.6	ϕ10/20x40	2453.8
	L	90.0	1ϕ20/10	429	380.6	494.6	ϕ10/20x40	2453.8

Tab. 45 - Concio di attacco, Verifiche allo Stato Limite Ultimo del rivestimento definitivo (sezione media)

Fase	Sezione	H [cm]	As (tesa)	V_{Sd} [kN/m]	V_{Rdc} [kN/m]	V_{Rds} [kN/m]	A_{st}	$V_{Rds,max}$ [kN/m]
Fase 4c	A	120.0	1ϕ20/10	405.5	462.6	337.2	ϕ10/40x40	3345.0
	B	55.0	1ϕ20/10	5.9	282.3	142.5	ϕ10/40x40	1414.0
	C	55.0	1ϕ20/10	91.4	245.7	142.5	ϕ10/40x40	1414.0
	D	55.0	1ϕ20/10	-4.5	216.3	142.5	ϕ10/40x40	1414.0
	E	55.0	1ϕ20/10	-91.3	245.6	142.5	ϕ10/40x40	1414.0
	F	55.0	1ϕ20/10	-6.0	282.3	142.5	ϕ10/40x40	1414.0
	G	120.0	1ϕ20/10	-405.5	462.5	337.2	ϕ10/40x40	3345.0
	H	90.0	1ϕ20/10	-310.4	367.9	494.6	ϕ10/20x40	2453.8
	I	90.0	1ϕ20/10	20.6	355.4	494.6	ϕ10/20x40	2453.8
	L	90.0	1ϕ20/10	368.4	371.9	494.6	ϕ10/20x40	2453.8

Tab. 46 - Concio di attacco, Verifiche allo Stato Limite Ultimo del rivestimento definitivo (sezione minima)

11.3.4 Verifiche a presso-flessione in condizioni sismiche

Nelle tabelle seguenti si riportano le verifiche strutturali del rivestimento definitivo in condizioni sismiche. Le sollecitazioni sono state ottenute sommando alle sollecitazioni della combinazione S.L.E. gli incrementi dovuti al sisma. Poiché lo sforzo normale indotto dall'azione sismica può essere sia di trazione che di compressione, nelle verifiche strutturali di seguito riportate sono state considerate entrambe le situazioni una volta sommando e una volta sottraendo il valore dell'incremento di sforzo normale sismico allo sforzo normale agente in condizioni statiche. Il momento flettente è stato massimizzato sommando in valore assoluto la sollecitazione S.L.E. e l'incremento sismico.

Come si può osservare in Tab. 47 e in Tab. 48 le verifiche sono tutte soddisfatte.

Fase	Sezione	H [cm]	As (tesa)	A's (compr)	N_{Sd} [kN/m]	M_{Sd} [kNm/m]	M_{Rd} [kNm/m]	M_{Rd}/M_{Sd} [-]
Fase 4b – Incremento sismico di compressione	A	145.3	1ϕ20/10	1ϕ20/20	761.1	1032.3	2120.6	761.1
	B	110.0	1ϕ20/10	1ϕ20/20	656.5	510.1	1512.4	656.5
	C	110.0	1ϕ20/10	1ϕ20/20	398.4	-198.1	1391.2	398.4
	D	110.0	1ϕ20/10	1ϕ20/20	225.3	-486.5	1309.9	225.3
	E	110.0	1ϕ20/10	1ϕ20/20	398.4	-250.4	1391.2	398.4
	F	110.0	1ϕ20/10	1ϕ20/20	656.6	476.8	1512.5	656.6
	G	145.3	1ϕ20/10	1ϕ20/20	761.2	915.3	2120.7	761.2
	H	90.0	1ϕ20/10	1ϕ20/20	669.3	-188.4	1200.8	669.3
	I	90.0	1ϕ20/10	1ϕ20/20	592.4	599.8	1174.4	592.4
	L	90.0	1ϕ20/10	1ϕ20/20	693.6	-188.3	1209.2	693.6
Fase 4b – Incremento sismico di trazione	A	145.3	1ϕ20/10	1ϕ20/20	689.3	1032.3	2075.9	2.0
	B	110.0	1ϕ20/10	1ϕ20/20	584.7	510.1	1478.7	2.9
	C	110.0	1ϕ20/10	1ϕ20/20	326.6	-198.1	1357.5	6.9
	D	110.0	1ϕ20/10	1ϕ20/20	153.5	-486.5	1276.2	2.6
	E	110.0	1ϕ20/10	1ϕ20/20	326.6	-250.4	1357.5	5.4
	F	110.0	1ϕ20/10	1ϕ20/20	584.8	476.8	1478.7	3.1
	G	145.3	1ϕ20/10	1ϕ20/20	689.4	915.3	2075.9	2.3
	H	90.0	1ϕ20/10	1ϕ20/20	597.5	-188.4	1176.1	6.2

	I	90.0	1ϕ20/10	1ϕ20/20	520.6	599.8	1149.7	1.9
	L	90.0	1ϕ20/10	1ϕ20/20	621.8	-188.3	1184.5	6.3

Tab. 47 – Concio di attacco, Verifiche in condizioni sismiche del rivestimento definitivo (sezione media)

Fase	Sezione	H [cm]	As (tesa)	A's (compr)	N_{Sd} [kN/m]	M_{Sd} [kNm/m]	M_{Rd} [kNm/m]	M_{Rd}/M_{Sd} [-]
Fase 4c – Incremento sismico di compressione	A	120.0	1ϕ20/10	1ϕ20/20	711.4	522.4	1693.4	3.2
	B	55.0	1ϕ20/10	1ϕ20/20	635.3	153.5	649.9	4.2
	C	55.0	1ϕ20/10	1ϕ20/20	418.1	-40.9	611.0	14.9
	D	55.0	1ϕ20/10	1ϕ20/20	243.8	-165.2	579.8	3.5
	E	55.0	1ϕ20/10	1ϕ20/20	417.9	37.1	611.0	16.5
	F	55.0	1ϕ20/10	1ϕ20/20	635.1	156.5	649.9	4.2
	G	120.0	1ϕ20/10	1ϕ20/20	711.2	643.1	1693.3	2.6
	H	90.0	1ϕ20/10	1ϕ20/20	591.1	106.1	1173.9	11.1
	I	90.0	1ϕ20/10	1ϕ20/20	521.6	453.7	1150.0	2.5
	L	90.0	1ϕ20/10	1ϕ20/20	613.7	105.9	1181.7	11.2
Fase 4c – Incremento sismico di trazione	A	120.0	1ϕ20/10	1ϕ20/20	702.0	522.4	1688.5	3.2
	B	55.0	1ϕ20/10	1ϕ20/20	625.9	153.5	648.2	4.2
	C	55.0	1ϕ20/10	1ϕ20/20	408.7	-40.9	609.3	14.9
	D	55.0	1ϕ20/10	1ϕ20/20	234.4	-165.2	578.1	3.5
	E	55.0	1ϕ20/10	1ϕ20/20	408.5	37.1	609.3	16.4
	F	55.0	1ϕ20/10	1ϕ20/20	625.7	156.5	648.2	4.1
	G	120.0	1ϕ20/10	1ϕ20/20	701.8	643.1	1688.4	2.6
	H	90.0	1ϕ20/10	1ϕ20/20	581.7	106.1	1170.7	11.0
	I	90.0	1ϕ20/10	1ϕ20/20	512.2	453.7	1146.8	2.5
	L	90.0	1ϕ20/10	1ϕ20/20	604.3	105.9	1178.5	11.1

Tab. 48 – Concio di attacco, Verifiche in condizioni sismiche del rivestimento definitivo (sezione minima)

11.3.5 Verifiche a taglio in condizioni sismiche

Nelle tabelle seguenti si riportano le verifiche strutturali del rivestimento definitivo in condizioni sismiche. Le sollecitazioni sono state ottenute sommando, in valore assoluto, le sollecitazioni della combinazione S.L.E. gli incrementi dovuti al sisma.

Come si può osservare in Tab. 49 e in Tab. 50 le verifiche sono tutte soddisfatte.

Fase	Sezione	H [cm]	As (tesa)	V_{Sd} [kN/m]	V_{Rdc} [kN/m]	V_{Rds} [kN/m]	A_{st}	$V_{Rds,max}$ [kN/m]
Fase 4b	A	145.3	1ϕ20/10	-375.2	499.1	412.9	ϕ10/40x40	4096.6
	B	110.0	1ϕ20/10	-124.2	402	307.2	ϕ10/40x40	3047.9
	C	110.0	1ϕ20/10	-194.2	365.9	307.2	ϕ10/40x40	3047.9
	D	110.0	1ϕ20/10	-81.5	341.7	307.2	ϕ10/40x40	3047.9
	E	110.0	1ϕ20/10	194.2	365.9	307.2	ϕ10/40x40	3047.9
	F	110.0	1ϕ20/10	124.2	402	307.2	ϕ10/40x40	3047.9
	G	145.3	1ϕ20/10	375.2	499.2	412.9	ϕ10/40x40	4096.6
	H	90.0	1ϕ20/10	-354.8	355.1	494.6	ϕ10/20x40	2453.8
	I	90.0	1ϕ20/10	91.8	344.5	494.6	ϕ10/20x40	2453.8
	L	90.0	1ϕ20/10	401.8	358.4	494.6	ϕ10/20x40	2453.8

Tab. 49 – Concio di attacco, Verifiche in condizioni sismiche del rivestimento definitivo (sezione media)

Fase	Sezione	H [cm]	As (tesa)	V_{Sd} [kN/m]	V_{Rdc} [kN/m]	V_{Rds} [kN/m]	A_{st}	$V_{Rds,max}$ [kN/m]
Fase 4c	A	120.0	1ϕ20/10	321.3	433.4	337.2	ϕ10/40x40	3345.0
	B	55.0	1ϕ20/10	14.0	258.4	142.5	ϕ10/40x40	1414.0
	C	55.0	1ϕ20/10	79.7	230.2	142.5	ϕ10/40x40	1414.0
	D	55.0	1ϕ20/10	-12.9	207.6	142.5	ϕ10/40x40	1414.0
	E	55.0	1ϕ20/10	-79.7	230.2	142.5	ϕ10/40x40	1414.0
	F	55.0	1ϕ20/10	-14.0	258.4	142.5	ϕ10/40x40	1414.0
	G	120.0	1ϕ20/10	-321.3	433.4	337.2	ϕ10/40x40	3345.0
	H	90.0	1ϕ20/10	-248.2	344.3	494.6	ϕ10/20x40	2453.8
	I	90.0	1ϕ20/10	25.3	334.7	494.6	ϕ10/20x40	2453.8
	L	90.0	1ϕ20/10	-292.8	347.4	494.6	ϕ10/20x40	2453.8

Tab. 50 – Concio di attacco, Verifiche in condizioni sismiche del rivestimento definitivo (sezione minima)

12. ALLEGATI

Si allega alla presente relazione il seguente elaborato:

12.1 ALLEGATO 3

Titolo: RISULTATI DELLE ANALISI DI VERIFICA DELLA GALLERIA ARTIFICIALE

Documento – Formato A4

Pagine: 339

ALLEGATO 1

RISULTATI DELLE ANALISI DI VERIFICA DELLA GALLERIA ARTIFICIALE

Documento – Formato A4

Pagine: 339

Table: Active Degrees of Freedom

Table: Active Degrees of Freedom

UX	UY	UZ	RX	RY	RZ
Yes	No	Yes	No	Yes	No

Table: Analysis Options, Part 1 of 2

Table: Analysis Options, Part 1 of 2

Solver	SolverProc	Force32Bit	StiffCase	GeomMod	HingeOpt	NumAThreads	MaxFileSize	NumDThreads
Advanced	Auto	No	None	None	In Elements	0	0	0

Table: Analysis Options, Part 2 of 2

Table: Analysis Options, Part 2 of 2

NumRThreads	UseMMFiles	AllowDiff
0	Program Determined	No

Table: Case - Static 1 - Load Assignments

Table: Case - Static 1 - Load Assignments

Case	LoadType	LoadName	LoadSF
P.P. peso proprio	Load pattern	P.P. peso proprio	1.
P.cop perm cop	Load pattern	P.cop perm cop	1.
SP.sx spinta terra perm	Load pattern	SP.sx spinta terra perm	1.
SP.dx spinta terra perm	Load pattern	SP.dx spinta terra perm	1.
Q1 variabile	Load pattern	Q1 variabile	1.
SQ1.sx spinta var	Load pattern	SQ1.sx spinta var	1.
SQ1.dx spinta var	Load pattern	SQ1.dx spinta var	1.
Ds.h sisma orizz	Load pattern	Ds.h sisma orizz	1.
Ds.v sisma vert	Load pattern	Ds.v sisma vert	1.
I h(inerzia orizz)	Load pattern	I h inerzia orizz	1.
I v(inerzia vert)	Load pattern	I v inerzia vert	1.
SLU 1-NL	Load pattern	P.P. peso proprio	1.3
SLU 1-NL	Load pattern	P.cop perm cop	1.3
SLU 1-NL	Load pattern	SP.sx spinta terra perm	1.3
SLU 1-NL	Load pattern	SP.dx spinta terra perm	1.3
SLU 1-NL	Load pattern	Q1 variabile	1.5
SLU 1-NL	Load pattern	SQ1.sx spinta var	1.5
SLU 1-NL	Load pattern	SQ1.dx spinta var	1.5
SLU 1-NL	Load pattern	Ds.h sisma orizz	0.
SLU 1-NL	Load pattern	Ds.v sisma vert	0.

Table: Case - Static 1 - Load Assignments

Case	LoadType	LoadName	LoadSF
SLU 2-NL	Load pattern	P.P. peso proprio	1.3
SLU 2-NL	Load pattern	P.cop perm cop	1.3
SLU 2-NL	Load pattern	SP.sx spinta terra perm	1.
SLU 2-NL	Load pattern	SP.dx spinta terra perm	1.
SLU 2-NL	Load pattern	Q1 variabile	1.5
SLU 2-NL	Load pattern	SQ1.sx spinta var	0.
SLU 2-NL	Load pattern	SQ1.dx spinta var	0.
SLU 2-NL	Load pattern	Ds.h sisma orizz	0.
SLU 2-NL	Load pattern	Ds.v sisma vert	0.
SLU 3-NL	Load pattern	P.P. peso proprio	1.
SLU 3-NL	Load pattern	P.cop perm cop	1.
SLU 3-NL	Load pattern	SP.sx spinta terra perm	1.3
SLU 3-NL	Load pattern	SP.dx spinta terra perm	1.3
SLU 3-NL	Load pattern	Q1 variabile	0.
SLU 3-NL	Load pattern	SQ1.sx spinta var	1.5
SLU 3-NL	Load pattern	SQ1.dx spinta var	1.5
SLU 3-NL	Load pattern	Ds.h sisma orizz	0.
SLU 3-NL	Load pattern	Ds.v sisma vert	0.
SLU 4-NL	Load pattern	P.P. peso proprio	1.3
SLU 4-NL	Load pattern	P.cop perm cop	1.3
SLU 4-NL	Load pattern	SP.sx spinta terra perm	1.3
SLU 4-NL	Load pattern	SP.dx spinta terra perm	1.
SLU 4-NL	Load pattern	Q1 variabile	1.5
SLU 4-NL	Load pattern	SQ1.sx spinta var	1.5
SLU 4-NL	Load pattern	SQ1.dx spinta var	0.
SLU 4-NL	Load pattern	Ds.h sisma orizz	0.
SLU 4-NL	Load pattern	Ds.v sisma vert	0.
SLU 5-NL	Load pattern	P.P. peso proprio	1.
SLU 5-NL	Load pattern	P.cop perm cop	1.
SLU 5-NL	Load pattern	SP.sx spinta terra perm	1.3
SLU 5-NL	Load pattern	SP.dx spinta terra perm	1.
SLU 5-NL	Load pattern	Q1 variabile	0.
SLU 5-NL	Load pattern	SQ1.sx spinta var	1.5
SLU 5-NL	Load pattern	SQ1.dx spinta var	0.
SLU 5-NL	Load pattern	Ds.h sisma orizz	0.
SLU 5-NL	Load pattern	Ds.v sisma vert	0.
SLU 6-NL	Load pattern	P.P. peso proprio	1.3
SLU 6-NL	Load pattern	P.cop perm cop	1.3
SLU 6-NL	Load pattern	SP.sx spinta terra perm	1.
SLU 6-NL	Load pattern	SP.dx spinta terra perm	1.3
SLU 6-NL	Load pattern	Q1 variabile	1.5
SLU 6-NL	Load pattern	SQ1.sx spinta var	0.
SLU 6-NL	Load pattern	SQ1.dx spinta var	1.5
SLU 6-NL	Load pattern	Ds.h sisma orizz	0.
SLU 6-NL	Load pattern	Ds.v sisma vert	0.
SLU 7-NL	Load pattern	P.P. peso proprio	1.

Table: Case - Static 1 - Load Assignments

Case	LoadType	LoadName	LoadSF
SLU 7-NL	Load pattern	P.cop perm cop	1.
SLU 7-NL	Load pattern	SP.sx spinta terra perm	1.
SLU 7-NL	Load pattern	SP.dx spinta terra perm	1.3
SLU 7-NL	Load pattern	Q1 variabile	0.
SLU 7-NL	Load pattern	SQ1.sx spinta var	0.
SLU 7-NL	Load pattern	SQ1.dx spinta var	1.5
SLU 7-NL	Load pattern	Ds.h sisma orizz	0.
SLU 7-NL	Load pattern	Ds.v sisma vert	0.
SLE-C-NL	Load pattern	P.P. peso proprio	1.
SLE-C-NL	Load pattern	P.cop perm cop	1.
SLE-C-NL	Load pattern	SP.sx spinta terra perm	1.
SLE-C-NL	Load pattern	SP.dx spinta terra perm	1.
SLE-C-NL	Load pattern	Q1 variabile	1.
SLE-C-NL	Load pattern	SQ1.sx spinta var	1.
SLE-C-NL	Load pattern	SQ1.dx spinta var	1.
SLE-C-NL	Load pattern	Ds.h sisma orizz	0.
SLE-C-NL	Load pattern	Ds.v sisma vert	0.
SLE-F-1-NL	Load pattern	P.P. peso proprio	1.
SLE-F-1-NL	Load pattern	P.cop perm cop	1.
SLE-F-1-NL	Load pattern	SP.sx spinta terra perm	1.
SLE-F-1-NL	Load pattern	SP.dx spinta terra perm	1.
SLE-F-1-NL	Load pattern	Q1 variabile	0.8
SLE-F-1-NL	Load pattern	SQ1.sx spinta var	0.
SLE-F-1-NL	Load pattern	SQ1.dx spinta var	0.
SLE-F-1-NL	Load pattern	Ds.h sisma orizz	0.
SLE-F-1-NL	Load pattern	Ds.v sisma vert	0.
SLE-F-2-NL	Load pattern	P.P. peso proprio	1.
SLE-F-2-NL	Load pattern	P.cop perm cop	1.
SLE-F-2-NL	Load pattern	SP.sx spinta terra perm	1.
SLE-F-2-NL	Load pattern	SP.dx spinta terra perm	1.
SLE-F-2-NL	Load pattern	Q1 variabile	0.
SLE-F-2-NL	Load pattern	SQ1.sx spinta var	0.8
SLE-F-2-NL	Load pattern	SQ1.dx spinta var	0.
SLE-F-2-NL	Load pattern	Ds.h sisma orizz	0.
SLE-F-2-NL	Load pattern	Ds.v sisma vert	0.
SLE-F-3-NL	Load pattern	P.P. peso proprio	1.
SLE-F-3-NL	Load pattern	P.cop perm cop	1.
SLE-F-3-NL	Load pattern	SP.sx spinta terra perm	1.
SLE-F-3-NL	Load pattern	SP.dx spinta terra perm	1.
SLE-F-3-NL	Load pattern	Q1 variabile	0.
SLE-F-3-NL	Load pattern	SQ1.sx spinta var	0.
SLE-F-3-NL	Load pattern	SQ1.dx spinta var	0.8
SLE-F-3-NL	Load pattern	Ds.h sisma orizz	0.
SLE-F-3-NL	Load pattern	Ds.v sisma vert	0.
SLE-QP-NL	Load pattern	P.P. peso proprio	1.
SLE-QP-NL	Load pattern	P.cop perm cop	1.

Table: Case - Static 1 - Load Assignments

Case	LoadType	LoadName	LoadSF
SLE-QP-NL	Load pattern	SP.sx spinta terra perm	1.
SLE-QP-NL	Load pattern	SP.dx spinta terra perm	1.
SLE-QP-NL	Load pattern	Q1 variabile	0.
SLE-QP-NL	Load pattern	SQ1.sx spinta var	0.
SLE-QP-NL	Load pattern	SQ1.dx spinta var	0.
SLE-QP-NL	Load pattern	Ds.h sisma orizz	0.
SLE-QP-NL	Load pattern	Ds.v sisma vert	0.
SLV1-NL	Load pattern	P.P. peso proprio	1.
SLV1-NL	Load pattern	P.cop perm cop	1.
SLV1-NL	Load pattern	SP.sx spinta terra perm	1.
SLV1-NL	Load pattern	SP.dx spinta terra perm	1.
SLV1-NL	Load pattern	Q1 variabile	0.2
SLV1-NL	Load pattern	SQ1.sx spinta var	0.2
SLV1-NL	Load pattern	SQ1.dx spinta var	0.2
SLV1-NL	Load pattern	Ds.h sisma orizz	1.
SLV1-NL	Load pattern	Ds.v sisma vert	-0.3
SLV1-NL	Load pattern	I h inerzia orizz	1.
SLV1-NL	Load pattern	I v inerzia vert	-0.3
SLV2-NL	Load pattern	P.P. peso proprio	1.
SLV2-NL	Load pattern	P.cop perm cop	1.
SLV2-NL	Load pattern	SP.sx spinta terra perm	1.
SLV2-NL	Load pattern	SP.dx spinta terra perm	1.
SLV2-NL	Load pattern	Q1 variabile	0.2
SLV2-NL	Load pattern	SQ1.sx spinta var	0.2
SLV2-NL	Load pattern	SQ1.dx spinta var	0.2
SLV2-NL	Load pattern	Ds.h sisma orizz	-1.
SLV2-NL	Load pattern	Ds.v sisma vert	-0.3
SLV2-NL	Load pattern	I h inerzia orizz	-1.
SLV2-NL	Load pattern	I v inerzia vert	-0.3
SLV3-NL	Load pattern	P.P. peso proprio	1.
SLV3-NL	Load pattern	P.cop perm cop	1.
SLV3-NL	Load pattern	SP.sx spinta terra perm	1.
SLV3-NL	Load pattern	SP.dx spinta terra perm	1.
SLV3-NL	Load pattern	Q1 variabile	0.2
SLV3-NL	Load pattern	SQ1.sx spinta var	0.2
SLV3-NL	Load pattern	SQ1.dx spinta var	0.2
SLV3-NL	Load pattern	Ds.h sisma orizz	1.
SLV3-NL	Load pattern	Ds.v sisma vert	0.3
SLV3-NL	Load pattern	I h inerzia orizz	1.
SLV3-NL	Load pattern	I v inerzia vert	0.3
SLV4-NL	Load pattern	P.P. peso proprio	1.
SLV4-NL	Load pattern	P.cop perm cop	1.
SLV4-NL	Load pattern	SP.sx spinta terra perm	1.
SLV4-NL	Load pattern	SP.dx spinta terra perm	1.
SLV4-NL	Load pattern	Q1 variabile	0.2
SLV4-NL	Load pattern	SQ1.sx spinta var	0.2

Table: Case - Static 1 - Load Assignments

Case	LoadType	LoadName	LoadSF
SLV4-NL	Load pattern	SQ1.dx spinta var	0.2
SLV4-NL	Load pattern	Ds.h sisma orizz	-1.
SLV4-NL	Load pattern	Ds.v sisma vert	0.3
SLV4-NL	Load pattern	I h inerzia orizz	-1.
SLV4-NL	Load pattern	I v inerzia vert	0.3
SLV5-NL	Load pattern	P.P. peso proprio	1.
SLV5-NL	Load pattern	P.cop perm cop	1.
SLV5-NL	Load pattern	SP.sx spinta terra perm	1.
SLV5-NL	Load pattern	SP.dx spinta terra perm	1.
SLV5-NL	Load pattern	Q1 variabile	0.2
SLV5-NL	Load pattern	SQ1.sx spinta var	0.2
SLV5-NL	Load pattern	SQ1.dx spinta var	0.2
SLV5-NL	Load pattern	Ds.h sisma orizz	0.3
SLV5-NL	Load pattern	Ds.v sisma vert	-1.
SLV5-NL	Load pattern	I h inerzia orizz	0.3
SLV5-NL	Load pattern	I v inerzia vert	-1.
SLV6-NL	Load pattern	P.P. peso proprio	1.
SLV6-NL	Load pattern	P.cop perm cop	1.
SLV6-NL	Load pattern	SP.sx spinta terra perm	1.
SLV6-NL	Load pattern	SP.dx spinta terra perm	1.
SLV6-NL	Load pattern	Q1 variabile	0.2
SLV6-NL	Load pattern	SQ1.sx spinta var	0.2
SLV6-NL	Load pattern	SQ1.dx spinta var	0.2
SLV6-NL	Load pattern	Ds.h sisma orizz	-0.3
SLV6-NL	Load pattern	Ds.v sisma vert	-1.
SLV6-NL	Load pattern	I h inerzia orizz	-0.3
SLV6-NL	Load pattern	I v inerzia vert	-1.
SLV7-NL	Load pattern	P.P. peso proprio	1.
SLV7-NL	Load pattern	P.cop perm cop	1.
SLV7-NL	Load pattern	SP.sx spinta terra perm	1.
SLV7-NL	Load pattern	SP.dx spinta terra perm	1.
SLV7-NL	Load pattern	Q1 variabile	0.2
SLV7-NL	Load pattern	SQ1.sx spinta var	0.2
SLV7-NL	Load pattern	SQ1.dx spinta var	0.2
SLV7-NL	Load pattern	Ds.h sisma orizz	0.3
SLV7-NL	Load pattern	Ds.v sisma vert	1.
SLV7-NL	Load pattern	I h inerzia orizz	0.3
SLV7-NL	Load pattern	I v inerzia vert	1.
SLV8-NL	Load pattern	P.P. peso proprio	1.
SLV8-NL	Load pattern	P.cop perm cop	1.
SLV8-NL	Load pattern	SP.sx spinta terra perm	1.
SLV8-NL	Load pattern	SP.dx spinta terra perm	1.
SLV8-NL	Load pattern	Q1 variabile	0.2
SLV8-NL	Load pattern	SQ1.sx spinta var	0.2
SLV8-NL	Load pattern	SQ1.dx spinta var	0.2
SLV8-NL	Load pattern	Ds.h sisma orizz	-0.3
SLV8-NL	Load pattern	Ds.v sisma vert	1.
SLV8-NL	Load pattern	I h inerzia orizz	-0.3

Table: Case - Static 1 - Load Assignments

Case	LoadType	LoadName	LoadSF
SLV8-NL	Load pattern	I v inerzia vert	1.
SLV9-NL	Load pattern	P.P. peso proprio	1.
SLV9-NL	Load pattern	P.cop perm cop	1.
SLV9-NL	Load pattern	SP.sx spinta terra perm	1.
SLV9-NL	Load pattern	SP.dx spinta terra perm	1.
SLV9-NL	Load pattern	Q1 variabile	0.2
SLV9-NL	Load pattern	SQ1.sx spinta var	0.2
SLV9-NL	Load pattern	SQ1.dx spinta var	0.2
SLV9-NL	Load pattern	Ds.h sisma orizz	1.
SLV9-NL	Load pattern	Ds.v sisma vert	-0.3
SLV9-NL	Load pattern	I h inerzia orizz	-1.
SLV9-NL	Load pattern	I v inerzia vert	0.3
SLV10-NL	Load pattern	P.P. peso proprio	1.
SLV10-NL	Load pattern	P.cop perm cop	1.
SLV10-NL	Load pattern	SP.sx spinta terra perm	1.
SLV10-NL	Load pattern	SP.dx spinta terra perm	1.
SLV10-NL	Load pattern	Q1 variabile	0.2
SLV10-NL	Load pattern	SQ1.sx spinta var	0.2
SLV10-NL	Load pattern	SQ1.dx spinta var	0.2
SLV10-NL	Load pattern	Ds.h sisma orizz	-1.
SLV10-NL	Load pattern	Ds.v sisma vert	-0.3
SLV10-NL	Load pattern	I h inerzia orizz	1.
SLV10-NL	Load pattern	I v inerzia vert	0.3
SLV11-NL	Load pattern	P.P. peso proprio	1.
SLV11-NL	Load pattern	P.cop perm cop	1.
SLV11-NL	Load pattern	SP.sx spinta terra perm	1.
SLV11-NL	Load pattern	SP.dx spinta terra perm	1.
SLV11-NL	Load pattern	Q1 variabile	0.2
SLV11-NL	Load pattern	SQ1.sx spinta var	0.2
SLV11-NL	Load pattern	SQ1.dx spinta var	0.2
SLV11-NL	Load pattern	Ds.h sisma orizz	1.
SLV11-NL	Load pattern	Ds.v sisma vert	0.3
SLV11-NL	Load pattern	I h inerzia orizz	-1.
SLV11-NL	Load pattern	I v inerzia vert	-0.3
SLV12-NL	Load pattern	P.P. peso proprio	1.
SLV12-NL	Load pattern	P.cop perm cop	1.
SLV12-NL	Load pattern	SP.sx spinta terra perm	1.
SLV12-NL	Load pattern	SP.dx spinta terra perm	1.
SLV12-NL	Load pattern	Q1 variabile	0.2
SLV12-NL	Load pattern	SQ1.sx spinta var	0.2
SLV12-NL	Load pattern	SQ1.dx spinta var	0.2
SLV12-NL	Load pattern	Ds.h sisma orizz	-1.
SLV12-NL	Load pattern	Ds.v sisma vert	0.3
SLV12-NL	Load pattern	I h inerzia orizz	1.
SLV12-NL	Load pattern	I v inerzia vert	-0.3
SLV13-NL	Load pattern	P.P. peso proprio	1.
SLV13-NL	Load pattern	P.cop perm cop	1.

Table: Case - Static 1 - Load Assignments

Case	LoadType	LoadName	LoadSF
SLV13-NL	Load pattern	SP.sx spinta terra perm	1.
SLV13-NL	Load pattern	SP.dx spinta terra perm	1.
SLV13-NL	Load pattern	Q1 variabile	0.2
SLV13-NL	Load pattern	SQ1.sx spinta var	0.2
SLV13-NL	Load pattern	SQ1.dx spinta var	0.2
SLV13-NL	Load pattern	Ds.h sisma orizz	0.3
SLV13-NL	Load pattern	Ds.v sisma vert	-1.
SLV13-NL	Load pattern	I h inerzia orizz	-0.3
SLV13-NL	Load pattern	I v inerzia vert	1.
SLV14-NL	Load pattern	P.P. peso proprio	1.
SLV14-NL	Load pattern	P.cop perm cop	1.
SLV14-NL	Load pattern	SP.sx spinta terra perm	1.
SLV14-NL	Load pattern	SP.dx spinta terra perm	1.
SLV14-NL	Load pattern	Q1 variabile	0.2
SLV14-NL	Load pattern	SQ1.sx spinta var	0.2
SLV14-NL	Load pattern	SQ1.dx spinta var	0.2
SLV14-NL	Load pattern	Ds.h sisma orizz	-0.3
SLV14-NL	Load pattern	Ds.v sisma vert	-1.
SLV14-NL	Load pattern	I h inerzia orizz	0.3
SLV14-NL	Load pattern	I v inerzia vert	1.
SLV15-NL	Load pattern	P.P. peso proprio	1.
SLV15-NL	Load pattern	P.cop perm cop	1.
SLV15-NL	Load pattern	SP.sx spinta terra perm	1.
SLV15-NL	Load pattern	SP.dx spinta terra perm	1.
SLV15-NL	Load pattern	Q1 variabile	0.2
SLV15-NL	Load pattern	SQ1.sx spinta var	0.2
SLV15-NL	Load pattern	SQ1.dx spinta var	0.2
SLV15-NL	Load pattern	Ds.h sisma orizz	0.3
SLV15-NL	Load pattern	Ds.v sisma vert	1.
SLV15-NL	Load pattern	I h inerzia orizz	-0.3
SLV15-NL	Load pattern	I v inerzia vert	-1.
SLV16-NL	Load pattern	P.P. peso proprio	1.
SLV16-NL	Load pattern	P.cop perm cop	1.
SLV16-NL	Load pattern	SP.sx spinta terra perm	1.
SLV16-NL	Load pattern	SP.dx spinta terra perm	1.
SLV16-NL	Load pattern	Q1 variabile	0.2
SLV16-NL	Load pattern	SQ1.sx spinta var	0.2
SLV16-NL	Load pattern	SQ1.dx spinta var	0.2
SLV16-NL	Load pattern	Ds.h sisma orizz	-0.3
SLV16-NL	Load pattern	Ds.v sisma vert	1.
SLV16-NL	Load pattern	I h inerzia orizz	0.3
SLV16-NL	Load pattern	I v inerzia vert	-1.
test	Load pattern	P.P. peso proprio	1.

Table: Case - Static 2 - Nonlinear Load Application

Table: Case - Static 2 - Nonlinear Load Application

Case	LoadApp	MonitorDOF	MonitorJt
SLU 1-NL	Full Load	U1	31
SLU 2-NL	Full Load	U1	31
SLU 3-NL	Full Load	U1	31
SLU 4-NL	Full Load	U1	31
SLU 5-NL	Full Load	U1	31
SLU 6-NL	Full Load	U1	31
SLU 7-NL	Full Load	U1	31
SLE-C-NL	Full Load	U1	31
SLE-F-1-NL	Full Load	U1	31
SLE-F-2-NL	Full Load	U1	31
SLE-F-3-NL	Full Load	U1	31
SLE-QP-NL	Full Load	U1	31
SLV1-NL	Full Load	U1	31
SLV2-NL	Full Load	U1	31
SLV3-NL	Full Load	U1	31
SLV4-NL	Full Load	U1	31
SLV5-NL	Full Load	U1	31
SLV6-NL	Full Load	U1	31
SLV7-NL	Full Load	U1	31
SLV8-NL	Full Load	U1	31
SLV9-NL	Full Load	U1	31
SLV10-NL	Full Load	U1	31
SLV11-NL	Full Load	U1	31
SLV12-NL	Full Load	U1	31
SLV13-NL	Full Load	U1	31
SLV14-NL	Full Load	U1	31
SLV15-NL	Full Load	U1	31
SLV16-NL	Full Load	U1	31
test	Full Load	U1	31

Table: Case - Static 4 - Nonlinear Parameters, Part 1 of 3

Table: Case - Static 4 - Nonlinear Parameters, Part 1 of 3

Case	GeoNonLin	ResultsSave	SolScheme	MaxTotal	MaxNull	EvLumpTol	MaxEvPerStp
SLU 1-NL	P-Delta	Final State	Iterative Events	200	50	0.01	24
SLU 2-NL	P-Delta	Final State	Iterative Events	200	50	0.01	24
SLU 3-NL	P-Delta	Final State	Iterative Events	200	50	0.01	24
SLU 4-NL	P-Delta	Final State	Iterative Events	200	50	0.01	24
SLU 5-NL	P-Delta	Final State	Iterative Events	200	50	0.01	24
SLU 6-NL	P-Delta	Final State	Iterative Events	200	50	0.01	24
SLU 7-NL	P-Delta	Final State	Iterative Events	200	50	0.01	24
SLE-C-NL	P-Delta	Final State	Iterative Events	200	50	0.01	24
SLE-F-1-NL	P-Delta	Final State	Iterative Events	200	50	0.01	24

Table: Case - Static 4 - Nonlinear Parameters, Part 1 of 3

Case	GeoNonLin	ResultsSave	SolScheme	MaxTotal	MaxNull	EvLumpTol	MaxEvPerStp
SLE-F-2-NL	P-Delta	Final State	Iterative Events	200	50	0.01	24
SLE-F-3-NL	P-Delta	Final State	Iterative Events	200	50	0.01	24
SLE-QP-NL	P-Delta	Final State	Iterative Events	200	50	0.01	24
SLV1-NL	P-Delta	Final State	Iterative Events	200	50	0.01	24
SLV2-NL	P-Delta	Final State	Iterative Events	200	50	0.01	24
SLV3-NL	P-Delta	Final State	Iterative Events	200	50	0.01	24
SLV4-NL	P-Delta	Final State	Iterative Events	200	50	0.01	24
SLV5-NL	P-Delta	Final State	Iterative Events	200	50	0.01	24
SLV6-NL	P-Delta	Final State	Iterative Events	200	50	0.01	24
SLV7-NL	P-Delta	Final State	Iterative Events	200	50	0.01	24
SLV8-NL	P-Delta	Final State	Iterative Events	200	50	0.01	24
SLV9-NL	P-Delta	Final State	Iterative Events	200	50	0.01	24
SLV10-NL	P-Delta	Final State	Iterative Events	200	50	0.01	24
SLV11-NL	P-Delta	Final State	Iterative Events	200	50	0.01	24
SLV12-NL	P-Delta	Final State	Iterative Events	200	50	0.01	24
SLV13-NL	P-Delta	Final State	Iterative Events	200	50	0.01	24
SLV14-NL	P-Delta	Final State	Iterative Events	200	50	0.01	24
SLV15-NL	P-Delta	Final State	Iterative Events	200	50	0.01	24
SLV16-NL	P-Delta	Final State	Iterative Events	200	50	0.01	24
test	None	Final State	Iterative Events	200	50	0.01	24

Table: Case - Static 4 - Nonlinear Parameters, Part 2 of 3

Table: Case - Static 4 - Nonlinear Parameters, Part 2 of 3

Case	MaxIterCS	MaxIterNR	ItConvTol	StageSave	StageMinIns	StageMinTD
SLU 1-NL	10	40	1.0000E-04			
SLU 2-NL	10	40	1.0000E-04			
SLU 3-NL	10	40	1.0000E-04			
SLU 4-NL	10	40	1.0000E-04			
SLU 5-NL	10	40	1.0000E-04			
SLU 6-NL	10	40	1.0000E-04			
SLU 7-NL	10	40	1.0000E-04			
SLE-C-NL	10	40	1.0000E-04			
SLE-F-1-NL	10	40	1.0000E-04			
SLE-F-2-NL	10	40	1.0000E-04			

Table: Case - Static 4 - Nonlinear Parameters, Part 2 of 3

Case	MaxIterCS	MaxIterNR	ItConvTol	StageSave	StageMinIns	StageMinTD
SLE-F-3-NL	10	40	1.0000E-04			
SLE-QP-NL	10	40	1.0000E-04			
SLV1-NL	10	40	1.0000E-04			
SLV2-NL	10	40	1.0000E-04			
SLV3-NL	10	40	1.0000E-04			
SLV4-NL	10	40	1.0000E-04			
SLV5-NL	10	40	1.0000E-04			
SLV6-NL	10	40	1.0000E-04			
SLV7-NL	10	40	1.0000E-04			
SLV8-NL	10	40	1.0000E-04			
SLV9-NL	10	40	1.0000E-04			
SLV10-NL	10	40	1.0000E-04			
SLV11-NL	10	40	1.0000E-04			
SLV12-NL	10	40	1.0000E-04			
SLV13-NL	10	40	1.0000E-04			
SLV14-NL	10	40	1.0000E-04			
SLV15-NL	10	40	1.0000E-04			
SLV16-NL	10	40	1.0000E-04			
test	10	40	1.0000E-04			

Table: Case - Static 4 - Nonlinear Parameters, Part 3 of 3

Table: Case - Static 4 - Nonlinear Parameters, Part 3 of 3

Case	TimeDepMat	TFMaxIter	TFTol	TFAccelFact	TFNoStop
SLU 1-NL		10	0.01	1.	No
SLU 2-NL		10	0.01	1.	No
SLU 3-NL		10	0.01	1.	No
SLU 4-NL		10	0.01	1.	No
SLU 5-NL		10	0.01	1.	No
SLU 6-NL		10	0.01	1.	No
SLU 7-NL		10	0.01	1.	No
SLE-C-NL		10	0.01	1.	No
SLE-F-1-NL		10	0.01	1.	No
SLE-F-2-NL		10	0.01	1.	No
SLE-F-3-NL		10	0.01	1.	No
SLE-QP-NL		10	0.01	1.	No
SLV1-NL		10	0.01	1.	No
SLV2-NL		10	0.01	1.	No
SLV3-NL		10	0.01	1.	No
SLV4-NL		10	0.01	1.	No
SLV5-NL		10	0.01	1.	No
SLV6-NL		10	0.01	1.	No
SLV7-NL		10	0.01	1.	No
SLV8-NL		10	0.01	1.	No
SLV9-NL		10	0.01	1.	No
SLV10-NL		10	0.01	1.	No
SLV11-NL		10	0.01	1.	No
SLV12-NL		10	0.01	1.	No
SLV13-NL		10	0.01	1.	No
SLV14-NL		10	0.01	1.	No
SLV15-NL		10	0.01	1.	No
SLV16-NL		10	0.01	1.	No

Table: Case - Static 4 - Nonlinear Parameters, Part 3 of 3

Case	TimeDepMat	TFMaxIter	TFTol	TFAccelFact	TFNoStop
test		10	0.01	1.	No

Table: Connectivity - Frame, Part 1 of 2

Table: Connectivity - Frame, Part 1 of 2

Frame	JointI	JointJ	IsCurved	Length	CentroidX	CentroidY	CentroidZ
				m	m	m	m
3	22	8	No	0.96371	-3.49097	0.	1.4263
4	20	24	No	0.96371	3.49097	0.	1.4263
7	8	9	No	0.5127	-2.76692	0.	1.34233
8	9	10	No	0.5127	-2.27786	0.	1.18921
9	10	11	No	0.5127	-1.78043	0.	1.06604
10	11	12	No	0.5127	-1.27644	0.	0.97326
11	12	13	No	0.5127	-0.76775	0.	0.91122
12	13	14	No	0.5127	-0.25623	0.	0.88014
13	14	15	No	0.5127	0.25623	0.	0.88014
14	15	16	No	0.5127	0.76775	0.	0.91122
15	16	17	No	0.5127	1.27644	0.	0.97326
16	17	18	No	0.5127	1.78043	0.	1.06604
17	18	19	No	0.5127	2.27786	0.	1.18921
18	19	20	No	0.5127	2.76692	0.	1.34233
21	40	26	No	2.09284	-3.08642	0.	7.83326
26	26	27	No	0.46056	-1.99482	0.	8.49391
27	27	28	No	0.46056	-1.57466	0.	8.68098
28	28	29	No	0.46056	-1.13724	0.	8.82311
29	29	30	No	0.46056	-0.68737	0.	8.91873
30	30	31	No	0.46056	-0.22996	0.	8.9668
31	31	32	No	0.46056	0.22996	0.	8.9668
32	32	33	No	0.46056	0.68737	0.	8.91873
33	33	34	No	0.46056	1.13724	0.	8.82311
34	34	35	No	0.46056	1.57466	0.	8.68098
35	35	36	No	0.46056	1.99482	0.	8.49391
36	36	39	No	2.09284	3.08642	0.	7.83326
41	24	41	No	3.01042	3.97283	0.	2.93152
42	41	39	No	2.84042	3.97283	0.	5.85694
43	22	42	No	3.01042	-3.97283	0.	2.93152
44	42	40	No	2.84042	-3.97283	0.	5.85694

Table: Connectivity - Frame, Part 2 of 2

Table: Connectivity - Frame, Part 2 of 2

Frame	GUID
3	e6130f4b-5c38-4831-b79d-9b33a06c49ff
4	2dc951d5-366d-498f-a735-c4cfceececc3
7	44c839f0-093d-4c59-b913-6dead40a9e0a
8	3c43ffaa-4a53-44fe-b515-133710697c6f
9	df2a4644-c7f5-48dc-af0d-81d0b68bb542

Table: Connectivity - Frame, Part 2 of 2

Frame	GUID
10	656a1d97-1482-4251-b5da-3f1856237218
11	590a2bdc-9a94-4690-918a-c066cef63d01
12	311b1935-9c43-49e2-90e5-f864f464cea0
13	c10aaf88-992b-485b-83a1-370a5e4a724f
14	168fff39-bc90-44f4-b7e1-fdd6fd5fe1be
15	9542379a-fb9f-48e9-8e97-ca3313494cd2
16	0d5e6c82-e4e4-4b0b-a4eb-22c71d763454
17	83766581-f338-4f08-9abb-a88342da628b
18	a6db58de-5742-437e-b8dc-5e8196366332
21	67466037-bfe9-4137-9c4b-ef9c7608c711
26	dd67735b-516e-4bad-a884-e312775f7c85
27	74727888-48c5-4639-b768-59e94842d32e
28	e462f1f2-1e0a-4619-b082-665d8c54d66d
29	7723df9e-77a2-4b55-be9b-05b56be697de
30	93be15c6-0400-445e-a6c7-6b5707c571f7
31	e7ceacbe-2242-4f53-abf3-cdf2ed07ae6f
32	ecb14805-0cae-4e83-8f53-6d8e682ddae7
33	949886c6-6f90-4e30-9647-7ba873ff82aa
34	0d3245b2-b136-4618-b99d-0622c5635f1c
35	89da6793-e31b-4e1d-91bb-866fa2d2c440
36	c0f3a515-f5ea-41fc-a44f-482c808e9e5d
41	8e5f889c-e2e8-440e-8c74-345f7c9cc6de
42	d8d0416b-cfd8-426e-ba3b-fc42491d1fb4
43	dd0c25d4-f5df-47e6-9963-e3fdc1c10b5f
44	a6afd942-ec62-41bf-a759-f96c1866d64d

Table: Element Forces - Frames, Part 1 of 2

Table: Element Forces - Frames, Part 1 of 2

Frame	Station	OutputCase	CaseType	StepType	P	V2	V3	T
	m				KN	KN	KN	KN-m
3	0.	SLU 1-NL	NonStatic	Max	-409.435	-756.343	-9.263E-14	0.
3	0.48186	SLU 1-NL	NonStatic	Max	-409.435	-771.103	-9.443E-14	0.

Table: Element Forces - Frames, Part 1 of 2

Frame	Station	OutputCase	CaseType	StepType	P	V2	V3	T
	m				KN	KN	KN	KN-m
3	0.96371	SLU 1-NL	NonStatic	Max	-409.435	-785.863	-9.624E-14	0.
3	0.	SLU 1-NL	NonStatic	Min	-409.435	-756.343	-9.263E-14	0.
3	0.48186	SLU 1-NL	NonStatic	Min	-409.435	-771.103	-9.443E-14	0.
3	0.96371	SLU 1-NL	NonStatic	Min	-409.435	-785.863	-9.624E-14	0.
3	0.	SLU 2-NL	NonStatic	Max	-291.748	-755.941	-9.258E-14	0.
3	0.48186	SLU 2-NL	NonStatic	Max	-291.748	-770.702	-9.438E-14	0.
3	0.96371	SLU 2-NL	NonStatic	Max	-291.748	-785.462	-9.619E-14	0.
3	0.	SLU 2-NL	NonStatic	Min	-291.748	-755.941	-9.258E-14	0.
3	0.48186	SLU 2-NL	NonStatic	Min	-291.748	-770.702	-9.438E-14	0.
3	0.96371	SLU 2-NL	NonStatic	Min	-291.748	-785.462	-9.619E-14	0.
3	0.	SLU 3-NL	NonStatic	Max	-400.537	-502.064	-6.149E-14	0.
3	0.48186	SLU 3-NL	NonStatic	Max	-400.537	-513.418	-6.288E-14	0.
3	0.96371	SLU 3-NL	NonStatic	Max	-400.537	-524.772	-6.427E-14	0.
3	0.	SLU 3-NL	NonStatic	Min	-400.537	-502.064	-6.149E-14	0.
3	0.48186	SLU 3-NL	NonStatic	Min	-400.537	-513.418	-6.288E-14	0.
3	0.96371	SLU 3-NL	NonStatic	Min	-400.537	-524.772	-6.427E-14	0.
3	0.	SLU 4-NL	NonStatic	Max	-405.226	-749.735	-9.182E-14	0.
3	0.48186	SLU 4-NL	NonStatic	Max	-405.226	-764.496	-9.362E-14	0.
3	0.96371	SLU 4-NL	NonStatic	Max	-405.226	-779.256	-9.543E-14	0.
3	0.	SLU 4-NL	NonStatic	Min	-405.226	-749.735	-9.182E-14	0.
3	0.48186	SLU 4-NL	NonStatic	Min	-405.226	-764.496	-9.362E-14	0.
3	0.96371	SLU 4-NL	NonStatic	Min	-405.226	-779.256	-9.543E-14	0.
3	0.	SLU 5-NL	NonStatic	Max	-405.49	-495.256	-6.065E-14	0.
3	0.48186	SLU 5-NL	NonStatic	Max	-405.49	-506.61	-6.204E-14	0.
3	0.96371	SLU 5-NL	NonStatic	Max	-405.49	-517.964	-6.343E-14	0.
3	0.	SLU 5-NL	NonStatic	Min	-405.49	-495.256	-6.065E-14	0.
3	0.48186	SLU 5-NL	NonStatic	Min	-405.49	-506.61	-6.204E-14	0.
3	0.96371	SLU 5-NL	NonStatic	Min	-405.49	-517.964	-6.343E-14	0.
3	0.	SLU 6-NL	NonStatic	Max	-396.568	-762.89	-9.343E-14	0.
3	0.48186	SLU 6-NL	NonStatic	Max	-396.568	-777.65	-9.523E-14	0.
3	0.96371	SLU 6-NL	NonStatic	Max	-396.568	-792.41	-9.704E-14	0.
3	0.	SLU 6-NL	NonStatic	Min	-396.568	-762.89	-9.343E-14	0.
3	0.48186	SLU 6-NL	NonStatic	Min	-396.568	-777.65	-9.523E-14	0.
3	0.96371	SLU 6-NL	NonStatic	Min	-396.568	-792.41	-9.704E-14	0.
3	0.	SLU 7-NL	NonStatic	Max	-396.188	-508.879	-6.232E-14	0.
3	0.48186	SLU 7-NL	NonStatic	Max	-396.188	-520.233	-6.371E-14	0.
3	0.96371	SLU 7-NL	NonStatic	Max	-396.188	-531.587	-6.510E-14	0.
3	0.	SLU 7-NL	NonStatic	Min	-396.188	-508.879	-6.232E-14	0.
3	0.48186	SLU 7-NL	NonStatic	Min	-396.188	-520.233	-6.371E-14	0.
3	0.96371	SLU 7-NL	NonStatic	Min	-396.188	-531.587	-6.510E-14	0.
3	0.	SLE-C-NL	NonStatic	Max	-310.71	-571.116	-6.994E-14	0.
3	0.48186	SLE-C-NL	NonStatic	Max	-310.71	-582.47	-7.133E-14	0.
3	0.96371	SLE-C-NL	NonStatic	Max	-310.71	-593.824	-7.272E-14	0.
3	0.	SLE-C-NL	NonStatic	Min	-310.71	-571.116	-6.994E-14	0.
3	0.48186	SLE-C-NL	NonStatic	Min	-310.71	-582.47	-7.133E-14	0.
3	0.96371	SLE-C-NL	NonStatic	Min	-310.71	-593.824	-7.272E-14	0.
3	0.	SLE-F-1-NL	NonStatic	Max	-281.766	-557.14	-6.823E-14	0.
3	0.48186	SLE-F-1-NL	NonStatic	Max	-281.766	-568.494	-6.962E-14	0.
3	0.96371	SLE-F-1-NL	NonStatic	Max	-281.766	-579.848	-7.101E-14	0.
3	0.	SLE-F-1-NL	NonStatic	Min	-281.766	-557.14	-6.823E-14	0.
3	0.48186	SLE-F-1-NL	NonStatic	Min	-281.766	-568.494	-6.962E-14	0.
3	0.96371	SLE-F-1-NL	NonStatic	Min	-281.766	-579.848	-7.101E-14	0.
3	0.	SLE-F-2-NL	NonStatic	Max	-302.998	-500.015	-6.123E-14	0.
3	0.48186	SLE-F-2-NL	NonStatic	Max	-302.998	-511.369	-6.262E-14	0.

Table: Element Forces - Frames, Part 1 of 2

Frame	Station	OutputCase	CaseType	StepType	P	V2	V3	T
	m				KN	KN	KN	KN-m
3	0.96371	SLE-F-2-NL	NonStatic	Max	-302.998	-522.723	-6.402E-14	0.
3	0.	SLE-F-2-NL	NonStatic	Min	-302.998	-500.015	-6.123E-14	0.
3	0.48186	SLE-F-2-NL	NonStatic	Min	-302.998	-511.369	-6.262E-14	0.
3	0.96371	SLE-F-2-NL	NonStatic	Min	-302.998	-522.723	-6.402E-14	0.
3	0.	SLE-F-3-NL	NonStatic	Max	-300.795	-503.45	-6.165E-14	0.
3	0.48186	SLE-F-3-NL	NonStatic	Max	-300.795	-514.804	-6.305E-14	0.
3	0.96371	SLE-F-3-NL	NonStatic	Max	-300.795	-526.158	-6.444E-14	0.
3	0.	SLE-F-3-NL	NonStatic	Min	-300.795	-503.45	-6.165E-14	0.
3	0.48186	SLE-F-3-NL	NonStatic	Min	-300.795	-514.804	-6.305E-14	0.
3	0.96371	SLE-F-3-NL	NonStatic	Min	-300.795	-526.158	-6.444E-14	0.
3	0.	SLE-QP-NL	NonStatic	Max	-282.858	-501.663	-6.144E-14	0.
3	0.48186	SLE-QP-NL	NonStatic	Max	-282.858	-513.017	-6.283E-14	0.
3	0.96371	SLE-QP-NL	NonStatic	Max	-282.858	-524.371	-6.422E-14	0.
3	0.	SLE-QP-NL	NonStatic	Min	-282.858	-501.663	-6.144E-14	0.
3	0.48186	SLE-QP-NL	NonStatic	Min	-282.858	-513.017	-6.283E-14	0.
3	0.96371	SLE-QP-NL	NonStatic	Min	-282.858	-524.371	-6.422E-14	0.
3	0.	SLV1-NL	NonStatic	Max	-368.451	-506.343	-6.201E-14	0.
3	0.48186	SLV1-NL	NonStatic	Max	-369.514	-517.856	-6.342E-14	0.
3	0.96371	SLV1-NL	NonStatic	Max	-370.577	-529.37	-6.483E-14	0.
3	0.	SLV1-NL	NonStatic	Min	-368.451	-506.343	-6.201E-14	0.
3	0.48186	SLV1-NL	NonStatic	Min	-369.514	-517.856	-6.342E-14	0.
3	0.96371	SLV1-NL	NonStatic	Min	-370.577	-529.37	-6.483E-14	0.
3	0.	SLV2-NL	NonStatic	Max	-319.351	-525.522	-6.436E-14	0.
3	0.48186	SLV2-NL	NonStatic	Max	-318.288	-537.036	-6.577E-14	0.
3	0.96371	SLV2-NL	NonStatic	Max	-317.225	-548.549	-6.718E-14	0.
3	0.	SLV2-NL	NonStatic	Min	-319.351	-525.522	-6.436E-14	0.
3	0.48186	SLV2-NL	NonStatic	Min	-318.288	-537.036	-6.577E-14	0.
3	0.96371	SLV2-NL	NonStatic	Min	-317.225	-548.549	-6.718E-14	0.
3	0.	SLV3-NL	NonStatic	Max	-367.205	-505.903	-6.196E-14	0.
3	0.48186	SLV3-NL	NonStatic	Max	-368.268	-517.097	-6.333E-14	0.
3	0.96371	SLV3-NL	NonStatic	Max	-369.331	-528.292	-6.470E-14	0.
3	0.	SLV3-NL	NonStatic	Min	-367.205	-505.903	-6.196E-14	0.
3	0.48186	SLV3-NL	NonStatic	Min	-368.268	-517.097	-6.333E-14	0.
3	0.96371	SLV3-NL	NonStatic	Min	-369.331	-528.292	-6.470E-14	0.
3	0.	SLV4-NL	NonStatic	Max	-318.11	-525.081	-6.430E-14	0.
3	0.48186	SLV4-NL	NonStatic	Max	-317.047	-536.276	-6.567E-14	0.
3	0.96371	SLV4-NL	NonStatic	Max	-315.984	-547.47	-6.705E-14	0.
3	0.	SLV4-NL	NonStatic	Min	-318.11	-525.081	-6.430E-14	0.
3	0.48186	SLV4-NL	NonStatic	Min	-317.047	-536.276	-6.567E-14	0.
3	0.96371	SLV4-NL	NonStatic	Min	-315.984	-547.47	-6.705E-14	0.
3	0.	SLV5-NL	NonStatic	Max	-309.427	-513.533	-6.289E-14	0.
3	0.48186	SLV5-NL	NonStatic	Max	-309.745	-525.419	-6.435E-14	0.
3	0.96371	SLV5-NL	NonStatic	Max	-310.064	-537.304	-6.580E-14	0.
3	0.	SLV5-NL	NonStatic	Min	-309.427	-513.533	-6.289E-14	0.
3	0.48186	SLV5-NL	NonStatic	Min	-309.745	-525.419	-6.435E-14	0.
3	0.96371	SLV5-NL	NonStatic	Min	-310.064	-537.304	-6.580E-14	0.
3	0.	SLV6-NL	NonStatic	Max	-295.001	-519.107	-6.357E-14	0.
3	0.48186	SLV6-NL	NonStatic	Max	-294.682	-530.993	-6.503E-14	0.
3	0.96371	SLV6-NL	NonStatic	Max	-294.363	-542.878	-6.648E-14	0.
3	0.	SLV6-NL	NonStatic	Min	-295.001	-519.107	-6.357E-14	0.
3	0.48186	SLV6-NL	NonStatic	Min	-294.682	-530.993	-6.503E-14	0.
3	0.96371	SLV6-NL	NonStatic	Min	-294.363	-542.878	-6.648E-14	0.
3	0.	SLV7-NL	NonStatic	Max	-305.272	-512.069	-6.271E-14	0.
3	0.48186	SLV7-NL	NonStatic	Max	-305.59	-522.891	-6.404E-14	0.

Table: Element Forces - Frames, Part 1 of 2

Frame	Station	OutputCase	CaseType	StepType	P	V2	V3	T
	m				KN	KN	KN	KN-m
3	0.96371	SLV7-NL	NonStatic	Max	-305.909	-533.714	-6.536E-14	0.
3	0.	SLV7-NL	NonStatic	Min	-305.272	-512.069	-6.271E-14	0.
3	0.48186	SLV7-NL	NonStatic	Min	-305.59	-522.891	-6.404E-14	0.
3	0.96371	SLV7-NL	NonStatic	Min	-305.909	-533.714	-6.536E-14	0.
3	0.	SLV8-NL	NonStatic	Max	-290.864	-517.634	-6.339E-14	0.
3	0.48186	SLV8-NL	NonStatic	Max	-290.545	-528.456	-6.472E-14	0.
3	0.96371	SLV8-NL	NonStatic	Max	-290.226	-539.279	-6.604E-14	0.
3	0.	SLV8-NL	NonStatic	Min	-290.864	-517.634	-6.339E-14	0.
3	0.48186	SLV8-NL	NonStatic	Min	-290.545	-528.456	-6.472E-14	0.
3	0.96371	SLV8-NL	NonStatic	Min	-290.226	-539.279	-6.604E-14	0.
3	0.	SLV9-NL	NonStatic	Max	-341.357	-507.293	-6.213E-14	0.
3	0.48186	SLV9-NL	NonStatic	Max	-340.294	-518.488	-6.350E-14	0.
3	0.96371	SLV9-NL	NonStatic	Max	-339.232	-529.683	-6.487E-14	0.
3	0.	SLV9-NL	NonStatic	Min	-341.357	-507.293	-6.213E-14	0.
3	0.48186	SLV9-NL	NonStatic	Min	-340.294	-518.488	-6.350E-14	0.
3	0.96371	SLV9-NL	NonStatic	Min	-339.232	-529.683	-6.487E-14	0.
3	0.	SLV10-NL	NonStatic	Max	-263.499	-510.272	-6.249E-14	0.
3	0.48186	SLV10-NL	NonStatic	Max	-264.562	-521.467	-6.386E-14	0.
3	0.96371	SLV10-NL	NonStatic	Max	-265.624	-532.661	-6.523E-14	0.
3	0.	SLV10-NL	NonStatic	Min	-263.499	-510.272	-6.249E-14	0.
3	0.48186	SLV10-NL	NonStatic	Min	-264.562	-521.467	-6.386E-14	0.
3	0.96371	SLV10-NL	NonStatic	Min	-265.624	-532.661	-6.523E-14	0.
3	0.	SLV11-NL	NonStatic	Max	-341.819	-520.89	-6.379E-14	0.
3	0.48186	SLV11-NL	NonStatic	Max	-340.756	-532.403	-6.520E-14	0.
3	0.96371	SLV11-NL	NonStatic	Max	-339.693	-543.917	-6.661E-14	0.
3	0.	SLV11-NL	NonStatic	Min	-341.819	-520.89	-6.379E-14	0.
3	0.48186	SLV11-NL	NonStatic	Min	-340.756	-532.403	-6.520E-14	0.
3	0.96371	SLV11-NL	NonStatic	Min	-339.693	-543.917	-6.661E-14	0.
3	0.	SLV12-NL	NonStatic	Max	-263.993	-523.85	-6.415E-14	0.
3	0.48186	SLV12-NL	NonStatic	Max	-265.055	-535.363	-6.556E-14	0.
3	0.96371	SLV12-NL	NonStatic	Max	-266.118	-546.877	-6.697E-14	0.
3	0.	SLV12-NL	NonStatic	Min	-263.993	-523.85	-6.415E-14	0.
3	0.48186	SLV12-NL	NonStatic	Min	-265.055	-535.363	-6.556E-14	0.
3	0.96371	SLV12-NL	NonStatic	Min	-266.118	-546.877	-6.697E-14	0.
3	0.	SLV13-NL	NonStatic	Max	-298.707	-492.531	-6.032E-14	0.
3	0.48186	SLV13-NL	NonStatic	Max	-298.388	-503.354	-6.164E-14	0.
3	0.96371	SLV13-NL	NonStatic	Max	-298.069	-514.177	-6.297E-14	0.
3	0.	SLV13-NL	NonStatic	Min	-298.707	-492.531	-6.032E-14	0.
3	0.48186	SLV13-NL	NonStatic	Min	-298.388	-503.354	-6.164E-14	0.
3	0.96371	SLV13-NL	NonStatic	Min	-298.069	-514.177	-6.297E-14	0.
3	0.	SLV14-NL	NonStatic	Max	-276.132	-493.264	-6.041E-14	0.
3	0.48186	SLV14-NL	NonStatic	Max	-276.451	-504.087	-6.173E-14	0.
3	0.96371	SLV14-NL	NonStatic	Max	-276.769	-514.91	-6.306E-14	0.
3	0.	SLV14-NL	NonStatic	Min	-276.132	-493.264	-6.041E-14	0.
3	0.48186	SLV14-NL	NonStatic	Min	-276.451	-504.087	-6.173E-14	0.
3	0.96371	SLV14-NL	NonStatic	Min	-276.769	-514.91	-6.306E-14	0.
3	0.	SLV15-NL	NonStatic	Max	-301.3	-537.856	-6.587E-14	0.
3	0.48186	SLV15-NL	NonStatic	Max	-300.982	-549.741	-6.732E-14	0.
3	0.96371	SLV15-NL	NonStatic	Max	-300.663	-561.627	-6.878E-14	0.
3	0.	SLV15-NL	NonStatic	Min	-301.3	-537.856	-6.587E-14	0.
3	0.48186	SLV15-NL	NonStatic	Min	-300.982	-549.741	-6.732E-14	0.
3	0.96371	SLV15-NL	NonStatic	Min	-300.663	-561.627	-6.878E-14	0.
3	0.	SLV16-NL	NonStatic	Max	-279.014	-538.532	-6.595E-14	0.
3	0.48186	SLV16-NL	NonStatic	Max	-279.333	-550.417	-6.741E-14	0.

Table: Element Forces - Frames, Part 1 of 2

Frame	Station	OutputCase	CaseType	StepType	P	V2	V3	T
	m				KN	KN	KN	KN-m
3	0.96371	SLV16-NL	NonStatic	Max	-279.651	-562.303	-6.886E-14	0.
3	0.	SLV16-NL	NonStatic	Min	-279.014	-538.532	-6.595E-14	0.
3	0.48186	SLV16-NL	NonStatic	Min	-279.333	-550.417	-6.741E-14	0.
3	0.96371	SLV16-NL	NonStatic	Min	-279.651	-562.303	-6.886E-14	0.
4	0.	SLU 1-NL	NonStatic	Max	-409.435	785.863	9.624E-14	0.
4	0.48186	SLU 1-NL	NonStatic	Max	-409.435	771.103	9.443E-14	0.
4	0.96371	SLU 1-NL	NonStatic	Max	-409.435	756.343	9.263E-14	0.
4	0.	SLU 1-NL	NonStatic	Min	-409.435	785.863	9.624E-14	0.
4	0.48186	SLU 1-NL	NonStatic	Min	-409.435	771.103	9.443E-14	0.
4	0.96371	SLU 1-NL	NonStatic	Min	-409.435	756.343	9.263E-14	0.
4	0.	SLU 2-NL	NonStatic	Max	-291.748	785.462	9.619E-14	0.
4	0.48186	SLU 2-NL	NonStatic	Max	-291.748	770.702	9.438E-14	0.
4	0.96371	SLU 2-NL	NonStatic	Max	-291.748	755.941	9.258E-14	0.
4	0.	SLU 2-NL	NonStatic	Min	-291.748	785.462	9.619E-14	0.
4	0.48186	SLU 2-NL	NonStatic	Min	-291.748	770.702	9.438E-14	0.
4	0.96371	SLU 2-NL	NonStatic	Min	-291.748	755.941	9.258E-14	0.
4	0.	SLU 3-NL	NonStatic	Max	-400.537	524.772	6.427E-14	0.
4	0.48186	SLU 3-NL	NonStatic	Max	-400.537	513.418	6.288E-14	0.
4	0.96371	SLU 3-NL	NonStatic	Max	-400.537	502.064	6.149E-14	0.
4	0.	SLU 3-NL	NonStatic	Min	-400.537	524.772	6.427E-14	0.
4	0.48186	SLU 3-NL	NonStatic	Min	-400.537	513.418	6.288E-14	0.
4	0.96371	SLU 3-NL	NonStatic	Min	-400.537	502.064	6.149E-14	0.
4	0.	SLU 4-NL	NonStatic	Max	-396.568	792.41	9.704E-14	0.
4	0.48186	SLU 4-NL	NonStatic	Max	-396.568	777.65	9.523E-14	0.
4	0.96371	SLU 4-NL	NonStatic	Max	-396.568	762.89	9.343E-14	0.
4	0.	SLU 4-NL	NonStatic	Min	-396.568	792.41	9.704E-14	0.
4	0.48186	SLU 4-NL	NonStatic	Min	-396.568	777.65	9.523E-14	0.
4	0.96371	SLU 4-NL	NonStatic	Min	-396.568	762.89	9.343E-14	0.
4	0.	SLU 5-NL	NonStatic	Max	-396.188	531.587	6.510E-14	0.
4	0.48186	SLU 5-NL	NonStatic	Max	-396.188	520.233	6.371E-14	0.
4	0.96371	SLU 5-NL	NonStatic	Max	-396.188	508.879	6.232E-14	0.
4	0.	SLU 5-NL	NonStatic	Min	-396.188	531.587	6.510E-14	0.
4	0.48186	SLU 5-NL	NonStatic	Min	-396.188	520.233	6.371E-14	0.
4	0.96371	SLU 5-NL	NonStatic	Min	-396.188	508.879	6.232E-14	0.
4	0.	SLU 6-NL	NonStatic	Max	-405.226	779.256	9.543E-14	0.
4	0.48186	SLU 6-NL	NonStatic	Max	-405.226	764.496	9.362E-14	0.
4	0.96371	SLU 6-NL	NonStatic	Max	-405.226	749.735	9.182E-14	0.
4	0.	SLU 6-NL	NonStatic	Min	-405.226	779.256	9.543E-14	0.
4	0.48186	SLU 6-NL	NonStatic	Min	-405.226	764.496	9.362E-14	0.
4	0.96371	SLU 6-NL	NonStatic	Min	-405.226	749.735	9.182E-14	0.
4	0.	SLU 7-NL	NonStatic	Max	-405.49	517.964	6.343E-14	0.
4	0.48186	SLU 7-NL	NonStatic	Max	-405.49	506.61	6.204E-14	0.
4	0.96371	SLU 7-NL	NonStatic	Max	-405.49	495.256	6.065E-14	0.
4	0.	SLU 7-NL	NonStatic	Min	-405.49	517.964	6.343E-14	0.
4	0.48186	SLU 7-NL	NonStatic	Min	-405.49	506.61	6.204E-14	0.
4	0.96371	SLU 7-NL	NonStatic	Min	-405.49	495.256	6.065E-14	0.
4	0.	SLE-C-NL	NonStatic	Max	-310.71	593.824	7.272E-14	0.
4	0.48186	SLE-C-NL	NonStatic	Max	-310.71	582.47	7.133E-14	0.
4	0.96371	SLE-C-NL	NonStatic	Max	-310.71	571.116	6.994E-14	0.
4	0.	SLE-C-NL	NonStatic	Min	-310.71	593.824	7.272E-14	0.
4	0.48186	SLE-C-NL	NonStatic	Min	-310.71	582.47	7.133E-14	0.
4	0.96371	SLE-C-NL	NonStatic	Min	-310.71	571.116	6.994E-14	0.
4	0.	SLE-F-1-NL	NonStatic	Max	-281.766	579.848	7.101E-14	0.
4	0.48186	SLE-F-1-NL	NonStatic	Max	-281.766	568.494	6.962E-14	0.

Table: Element Forces - Frames, Part 1 of 2

Frame	Station	OutputCase	CaseType	StepType	P	V2	V3	T
	m				KN	KN	KN	KN-m
4	0.96371	SLE-F-1-NL	NonStatic	Max	-281.766	557.14	6.823E-14	0.
4	0.	SLE-F-1-NL	NonStatic	Min	-281.766	579.848	7.101E-14	0.
4	0.48186	SLE-F-1-NL	NonStatic	Min	-281.766	568.494	6.962E-14	0.
4	0.96371	SLE-F-1-NL	NonStatic	Min	-281.766	557.14	6.823E-14	0.
4	0.	SLE-F-2-NL	NonStatic	Max	-300.795	526.158	6.444E-14	0.
4	0.48186	SLE-F-2-NL	NonStatic	Max	-300.795	514.804	6.305E-14	0.
4	0.96371	SLE-F-2-NL	NonStatic	Max	-300.795	503.45	6.165E-14	0.
4	0.	SLE-F-2-NL	NonStatic	Min	-300.795	526.158	6.444E-14	0.
4	0.48186	SLE-F-2-NL	NonStatic	Min	-300.795	514.804	6.305E-14	0.
4	0.96371	SLE-F-2-NL	NonStatic	Min	-300.795	503.45	6.165E-14	0.
4	0.	SLE-F-3-NL	NonStatic	Max	-302.998	522.723	6.402E-14	0.
4	0.48186	SLE-F-3-NL	NonStatic	Max	-302.998	511.369	6.262E-14	0.
4	0.96371	SLE-F-3-NL	NonStatic	Max	-302.998	500.015	6.123E-14	0.
4	0.	SLE-F-3-NL	NonStatic	Min	-302.998	522.723	6.402E-14	0.
4	0.48186	SLE-F-3-NL	NonStatic	Min	-302.998	511.369	6.262E-14	0.
4	0.96371	SLE-F-3-NL	NonStatic	Min	-302.998	500.015	6.123E-14	0.
4	0.	SLE-QP-NL	NonStatic	Max	-282.858	524.371	6.422E-14	0.
4	0.48186	SLE-QP-NL	NonStatic	Max	-282.858	513.017	6.283E-14	0.
4	0.96371	SLE-QP-NL	NonStatic	Max	-282.858	501.663	6.144E-14	0.
4	0.	SLE-QP-NL	NonStatic	Min	-282.858	524.371	6.422E-14	0.
4	0.48186	SLE-QP-NL	NonStatic	Min	-282.858	513.017	6.283E-14	0.
4	0.96371	SLE-QP-NL	NonStatic	Min	-282.858	501.663	6.144E-14	0.
4	0.	SLV1-NL	NonStatic	Max	-384.729	548.857	6.722E-14	0.
4	0.48186	SLV1-NL	NonStatic	Max	-385.792	537.344	6.581E-14	0.
4	0.96371	SLV1-NL	NonStatic	Max	-386.855	525.83	6.440E-14	0.
4	0.	SLV1-NL	NonStatic	Min	-384.729	548.857	6.722E-14	0.
4	0.48186	SLV1-NL	NonStatic	Min	-385.792	537.344	6.581E-14	0.
4	0.96371	SLV1-NL	NonStatic	Min	-386.855	525.83	6.440E-14	0.
4	0.	SLV2-NL	NonStatic	Max	-302.869	529.177	6.481E-14	0.
4	0.48186	SLV2-NL	NonStatic	Max	-301.806	517.663	6.340E-14	0.
4	0.96371	SLV2-NL	NonStatic	Max	-300.743	506.15	6.199E-14	0.
4	0.	SLV2-NL	NonStatic	Min	-302.869	529.177	6.481E-14	0.
4	0.48186	SLV2-NL	NonStatic	Min	-301.806	517.663	6.340E-14	0.
4	0.96371	SLV2-NL	NonStatic	Min	-300.743	506.15	6.199E-14	0.
4	0.	SLV3-NL	NonStatic	Max	-383.488	547.778	6.708E-14	0.
4	0.48186	SLV3-NL	NonStatic	Max	-384.551	536.583	6.571E-14	0.
4	0.96371	SLV3-NL	NonStatic	Max	-385.614	525.389	6.434E-14	0.
4	0.	SLV3-NL	NonStatic	Min	-383.488	547.778	6.708E-14	0.
4	0.48186	SLV3-NL	NonStatic	Min	-384.551	536.583	6.571E-14	0.
4	0.96371	SLV3-NL	NonStatic	Min	-385.614	525.389	6.434E-14	0.
4	0.	SLV4-NL	NonStatic	Max	-301.623	528.099	6.467E-14	0.
4	0.48186	SLV4-NL	NonStatic	Max	-300.56	516.904	6.330E-14	0.
4	0.96371	SLV4-NL	NonStatic	Max	-299.497	505.71	6.193E-14	0.
4	0.	SLV4-NL	NonStatic	Min	-301.623	528.099	6.467E-14	0.
4	0.48186	SLV4-NL	NonStatic	Min	-300.56	516.904	6.330E-14	0.
4	0.96371	SLV4-NL	NonStatic	Min	-299.497	505.71	6.193E-14	0.
4	0.	SLV5-NL	NonStatic	Max	-314.617	542.97	6.649E-14	0.
4	0.48186	SLV5-NL	NonStatic	Max	-314.936	531.085	6.504E-14	0.
4	0.96371	SLV5-NL	NonStatic	Max	-315.255	519.199	6.358E-14	0.
4	0.	SLV5-NL	NonStatic	Min	-314.617	542.97	6.649E-14	0.
4	0.48186	SLV5-NL	NonStatic	Min	-314.936	531.085	6.504E-14	0.
4	0.96371	SLV5-NL	NonStatic	Min	-315.255	519.199	6.358E-14	0.
4	0.	SLV6-NL	NonStatic	Max	-289.751	537.246	6.579E-14	0.
4	0.48186	SLV6-NL	NonStatic	Max	-289.432	525.361	6.434E-14	0.

Table: Element Forces - Frames, Part 1 of 2

Frame	Station	OutputCase	CaseType	StepType	P	V2	V3	T
	m				KN	KN	KN	KN-m
4	0.96371	SLV6-NL	NonStatic	Max	-289.113	513.475	6.288E-14	0.
4	0.	SLV6-NL	NonStatic	Min	-289.751	537.246	6.579E-14	0.
4	0.48186	SLV6-NL	NonStatic	Min	-289.432	525.361	6.434E-14	0.
4	0.96371	SLV6-NL	NonStatic	Min	-289.113	513.475	6.288E-14	0.
4	0.	SLV7-NL	NonStatic	Max	-310.48	539.371	6.605E-14	0.
4	0.48186	SLV7-NL	NonStatic	Max	-310.799	528.548	6.473E-14	0.
4	0.96371	SLV7-NL	NonStatic	Max	-311.118	517.726	6.340E-14	0.
4	0.	SLV7-NL	NonStatic	Min	-310.48	539.371	6.605E-14	0.
4	0.48186	SLV7-NL	NonStatic	Min	-310.799	528.548	6.473E-14	0.
4	0.96371	SLV7-NL	NonStatic	Min	-311.118	517.726	6.340E-14	0.
4	0.	SLV8-NL	NonStatic	Max	-285.596	533.656	6.535E-14	0.
4	0.48186	SLV8-NL	NonStatic	Max	-285.277	522.833	6.403E-14	0.
4	0.96371	SLV8-NL	NonStatic	Max	-284.958	512.01	6.270E-14	0.
4	0.	SLV8-NL	NonStatic	Min	-285.596	533.656	6.535E-14	0.
4	0.48186	SLV8-NL	NonStatic	Min	-285.277	522.833	6.403E-14	0.
4	0.96371	SLV8-NL	NonStatic	Min	-284.958	512.01	6.270E-14	0.
4	0.	SLV9-NL	NonStatic	Max	-333.132	532.968	6.527E-14	0.
4	0.48186	SLV9-NL	NonStatic	Max	-332.069	521.774	6.390E-14	0.
4	0.96371	SLV9-NL	NonStatic	Max	-331.006	510.579	6.253E-14	0.
4	0.	SLV9-NL	NonStatic	Min	-333.132	532.968	6.527E-14	0.
4	0.48186	SLV9-NL	NonStatic	Min	-332.069	521.774	6.390E-14	0.
4	0.96371	SLV9-NL	NonStatic	Min	-331.006	510.579	6.253E-14	0.
4	0.	SLV10-NL	NonStatic	Max	-271.523	529.489	6.484E-14	0.
4	0.48186	SLV10-NL	NonStatic	Max	-272.585	518.295	6.347E-14	0.
4	0.96371	SLV10-NL	NonStatic	Max	-273.648	507.1	6.210E-14	0.
4	0.	SLV10-NL	NonStatic	Min	-271.523	529.489	6.484E-14	0.
4	0.48186	SLV10-NL	NonStatic	Min	-272.585	518.295	6.347E-14	0.
4	0.96371	SLV10-NL	NonStatic	Min	-273.648	507.1	6.210E-14	0.
4	0.	SLV11-NL	NonStatic	Max	-333.625	547.183	6.701E-14	0.
4	0.48186	SLV11-NL	NonStatic	Max	-332.563	535.67	6.560E-14	0.
4	0.96371	SLV11-NL	NonStatic	Max	-331.5	524.157	6.419E-14	0.
4	0.	SLV11-NL	NonStatic	Min	-333.625	547.183	6.701E-14	0.
4	0.48186	SLV11-NL	NonStatic	Min	-332.563	535.67	6.560E-14	0.
4	0.96371	SLV11-NL	NonStatic	Min	-331.5	524.157	6.419E-14	0.
4	0.	SLV12-NL	NonStatic	Max	-271.985	543.723	6.659E-14	0.
4	0.48186	SLV12-NL	NonStatic	Max	-273.047	532.21	6.518E-14	0.
4	0.96371	SLV12-NL	NonStatic	Max	-274.11	520.696	6.377E-14	0.
4	0.	SLV12-NL	NonStatic	Min	-271.985	543.723	6.659E-14	0.
4	0.48186	SLV12-NL	NonStatic	Min	-273.047	532.21	6.518E-14	0.
4	0.96371	SLV12-NL	NonStatic	Min	-274.11	520.696	6.377E-14	0.
4	0.	SLV13-NL	NonStatic	Max	-296.508	515.002	6.307E-14	0.
4	0.48186	SLV13-NL	NonStatic	Max	-296.19	504.179	6.174E-14	0.
4	0.96371	SLV13-NL	NonStatic	Max	-295.871	493.357	6.042E-14	0.
4	0.	SLV13-NL	NonStatic	Min	-296.508	515.002	6.307E-14	0.
4	0.48186	SLV13-NL	NonStatic	Min	-296.19	504.179	6.174E-14	0.
4	0.96371	SLV13-NL	NonStatic	Min	-295.871	493.357	6.042E-14	0.
4	0.	SLV14-NL	NonStatic	Max	-278.286	514.123	6.296E-14	0.
4	0.48186	SLV14-NL	NonStatic	Max	-278.605	503.3	6.164E-14	0.
4	0.96371	SLV14-NL	NonStatic	Max	-278.924	492.477	6.031E-14	0.
4	0.	SLV14-NL	NonStatic	Min	-278.286	514.123	6.296E-14	0.
4	0.48186	SLV14-NL	NonStatic	Min	-278.605	503.3	6.164E-14	0.
4	0.96371	SLV14-NL	NonStatic	Min	-278.924	492.477	6.031E-14	0.
4	0.	SLV15-NL	NonStatic	Max	-299.168	562.39	6.887E-14	0.
4	0.48186	SLV15-NL	NonStatic	Max	-298.849	550.505	6.742E-14	0.

Table: Element Forces - Frames, Part 1 of 2

Frame	Station	OutputCase	CaseType	StepType	P	V2	V3	T
	m				KN	KN	KN	KN-m
4	0.96371	SLV15-NL	NonStatic	Max	-298.531	538.62	6.596E-14	0.
4	0.	SLV15-NL	NonStatic	Min	-299.168	562.39	6.887E-14	0.
4	0.48186	SLV15-NL	NonStatic	Min	-298.849	550.505	6.742E-14	0.
4	0.96371	SLV15-NL	NonStatic	Min	-298.531	538.62	6.596E-14	0.
4	0.	SLV16-NL	NonStatic	Max	-281.123	561.57	6.877E-14	0.
4	0.48186	SLV16-NL	NonStatic	Max	-281.442	549.685	6.732E-14	0.
4	0.96371	SLV16-NL	NonStatic	Max	-281.761	537.799	6.586E-14	0.
4	0.	SLV16-NL	NonStatic	Min	-281.123	561.57	6.877E-14	0.
4	0.48186	SLV16-NL	NonStatic	Min	-281.442	549.685	6.732E-14	0.
4	0.96371	SLV16-NL	NonStatic	Min	-281.761	537.799	6.586E-14	0.
7	0.	SLU 1-NL	NonStatic	Max	-603.516	-428.288	-5.142E-14	0.
7	0.25635	SLU 1-NL	NonStatic	Max	-605.971	-435.37	-5.229E-14	0.
7	0.5127	SLU 1-NL	NonStatic	Max	-608.427	-442.452	-5.316E-14	0.
7	0.	SLU 1-NL	NonStatic	Min	-603.516	-428.288	-5.142E-14	0.
7	0.25635	SLU 1-NL	NonStatic	Min	-605.971	-435.37	-5.229E-14	0.
7	0.5127	SLU 1-NL	NonStatic	Min	-608.427	-442.452	-5.316E-14	0.
7	0.	SLU 2-NL	NonStatic	Max	-492.128	-466.193	-5.598E-14	0.
7	0.25635	SLU 2-NL	NonStatic	Max	-494.583	-473.275	-5.684E-14	0.
7	0.5127	SLU 2-NL	NonStatic	Max	-497.039	-480.357	-5.771E-14	0.
7	0.	SLU 2-NL	NonStatic	Min	-492.128	-466.193	-5.598E-14	0.
7	0.25635	SLU 2-NL	NonStatic	Min	-494.583	-473.275	-5.684E-14	0.
7	0.5127	SLU 2-NL	NonStatic	Min	-497.039	-480.357	-5.771E-14	0.
7	0.	SLU 3-NL	NonStatic	Max	-522.796	-242.881	-2.916E-14	0.
7	0.25635	SLU 3-NL	NonStatic	Max	-524.685	-248.329	-2.983E-14	0.
7	0.5127	SLU 3-NL	NonStatic	Max	-526.574	-253.777	-3.049E-14	0.
7	0.	SLU 3-NL	NonStatic	Min	-522.796	-242.881	-2.916E-14	0.
7	0.25635	SLU 3-NL	NonStatic	Min	-524.685	-248.329	-2.983E-14	0.
7	0.5127	SLU 3-NL	NonStatic	Min	-526.574	-253.777	-3.049E-14	0.
7	0.	SLU 4-NL	NonStatic	Max	-597.94	-427.907	-5.138E-14	0.
7	0.25635	SLU 4-NL	NonStatic	Max	-600.396	-434.99	-5.225E-14	0.
7	0.5127	SLU 4-NL	NonStatic	Max	-602.852	-442.072	-5.311E-14	0.
7	0.	SLU 4-NL	NonStatic	Min	-597.94	-427.907	-5.138E-14	0.
7	0.25635	SLU 4-NL	NonStatic	Min	-600.396	-434.99	-5.225E-14	0.
7	0.5127	SLU 4-NL	NonStatic	Min	-602.852	-442.072	-5.311E-14	0.
7	0.	SLU 5-NL	NonStatic	Max	-525.82	-239.55	-2.876E-14	0.
7	0.25635	SLU 5-NL	NonStatic	Max	-527.709	-244.998	-2.943E-14	0.
7	0.5127	SLU 5-NL	NonStatic	Max	-529.598	-250.446	-3.009E-14	0.
7	0.	SLU 5-NL	NonStatic	Min	-525.82	-239.55	-2.876E-14	0.
7	0.25635	SLU 5-NL	NonStatic	Min	-527.709	-244.998	-2.943E-14	0.
7	0.5127	SLU 5-NL	NonStatic	Min	-529.598	-250.446	-3.009E-14	0.
7	0.	SLU 6-NL	NonStatic	Max	-592.93	-434.183	-5.213E-14	0.
7	0.25635	SLU 6-NL	NonStatic	Max	-595.386	-441.265	-5.300E-14	0.
7	0.5127	SLU 6-NL	NonStatic	Max	-597.841	-448.347	-5.387E-14	0.
7	0.	SLU 6-NL	NonStatic	Min	-592.93	-434.183	-5.213E-14	0.
7	0.25635	SLU 6-NL	NonStatic	Min	-595.386	-441.265	-5.300E-14	0.
7	0.5127	SLU 6-NL	NonStatic	Min	-597.841	-448.347	-5.387E-14	0.
7	0.	SLU 7-NL	NonStatic	Max	-520.348	-246.042	-2.954E-14	0.
7	0.25635	SLU 7-NL	NonStatic	Max	-522.237	-251.49	-3.021E-14	0.
7	0.5127	SLU 7-NL	NonStatic	Max	-524.126	-256.938	-3.087E-14	0.
7	0.	SLU 7-NL	NonStatic	Min	-520.348	-246.042	-2.954E-14	0.
7	0.25635	SLU 7-NL	NonStatic	Min	-522.237	-251.49	-3.021E-14	0.
7	0.5127	SLU 7-NL	NonStatic	Min	-524.126	-256.938	-3.087E-14	0.
7	0.	SLE-C-NL	NonStatic	Max	-457.24	-322.948	-3.878E-14	0.
7	0.25635	SLE-C-NL	NonStatic	Max	-459.129	-328.396	-3.944E-14	0.

Table: Element Forces - Frames, Part 1 of 2

Frame	Station	OutputCase	CaseType	StepType	P	V2	V3	T
	m				KN	KN	KN	KN-m
7	0.5127	SLE-C-NL	NonStatic	Max	-461.018	-333.843	-4.011E-14	0.
7	0.	SLE-C-NL	NonStatic	Min	-457.24	-322.948	-3.878E-14	0.
7	0.25635	SLE-C-NL	NonStatic	Min	-459.129	-328.396	-3.944E-14	0.
7	0.5127	SLE-C-NL	NonStatic	Min	-461.018	-333.843	-4.011E-14	0.
7	0.	SLE-F-1-NL	NonStatic	Max	-425.951	-322.034	-3.867E-14	0.
7	0.25635	SLE-F-1-NL	NonStatic	Max	-427.84	-327.482	-3.933E-14	0.
7	0.5127	SLE-F-1-NL	NonStatic	Max	-429.729	-332.93	-4.000E-14	0.
7	0.	SLE-F-1-NL	NonStatic	Min	-425.951	-322.034	-3.867E-14	0.
7	0.25635	SLE-F-1-NL	NonStatic	Min	-427.84	-327.482	-3.933E-14	0.
7	0.5127	SLE-F-1-NL	NonStatic	Min	-429.729	-332.93	-4.000E-14	0.
7	0.	SLE-F-2-NL	NonStatic	Max	-430.243	-274.364	-3.294E-14	0.
7	0.25635	SLE-F-2-NL	NonStatic	Max	-432.132	-279.812	-3.361E-14	0.
7	0.5127	SLE-F-2-NL	NonStatic	Max	-434.021	-285.26	-3.427E-14	0.
7	0.	SLE-F-2-NL	NonStatic	Min	-430.243	-274.364	-3.294E-14	0.
7	0.25635	SLE-F-2-NL	NonStatic	Min	-432.132	-279.812	-3.361E-14	0.
7	0.5127	SLE-F-2-NL	NonStatic	Min	-434.021	-285.26	-3.427E-14	0.
7	0.	SLE-F-3-NL	NonStatic	Max	-428.636	-274.954	-3.301E-14	0.
7	0.25635	SLE-F-3-NL	NonStatic	Max	-430.525	-280.402	-3.368E-14	0.
7	0.5127	SLE-F-3-NL	NonStatic	Max	-432.414	-285.85	-3.435E-14	0.
7	0.	SLE-F-3-NL	NonStatic	Min	-428.636	-274.954	-3.301E-14	0.
7	0.25635	SLE-F-3-NL	NonStatic	Min	-430.525	-280.402	-3.368E-14	0.
7	0.5127	SLE-F-3-NL	NonStatic	Min	-432.414	-285.85	-3.435E-14	0.
7	0.	SLE-QP-NL	NonStatic	Max	-411.418	-280.782	-3.371E-14	0.
7	0.25635	SLE-QP-NL	NonStatic	Max	-413.307	-286.23	-3.438E-14	0.
7	0.5127	SLE-QP-NL	NonStatic	Max	-415.196	-291.678	-3.505E-14	0.
7	0.	SLE-QP-NL	NonStatic	Min	-411.418	-280.782	-3.371E-14	0.
7	0.25635	SLE-QP-NL	NonStatic	Min	-413.307	-286.23	-3.438E-14	0.
7	0.5127	SLE-QP-NL	NonStatic	Min	-415.196	-291.678	-3.505E-14	0.
7	0.	SLV1-NL	NonStatic	Max	-495.935	-258.821	-3.108E-14	0.
7	0.25635	SLV1-NL	NonStatic	Max	-499.864	-263.647	-3.167E-14	0.
7	0.5127	SLV1-NL	NonStatic	Max	-503.793	-268.473	-3.226E-14	0.
7	0.	SLV1-NL	NonStatic	Min	-495.935	-258.821	-3.108E-14	0.
7	0.25635	SLV1-NL	NonStatic	Min	-499.864	-263.647	-3.167E-14	0.
7	0.5127	SLV1-NL	NonStatic	Min	-503.793	-268.473	-3.226E-14	0.
7	0.	SLV2-NL	NonStatic	Max	-450.439	-284.332	-3.414E-14	0.
7	0.25635	SLV2-NL	NonStatic	Max	-450.341	-290.554	-3.490E-14	0.
7	0.5127	SLV2-NL	NonStatic	Max	-450.243	-296.777	-3.566E-14	0.
7	0.	SLV2-NL	NonStatic	Min	-450.439	-284.332	-3.414E-14	0.
7	0.25635	SLV2-NL	NonStatic	Min	-450.341	-290.554	-3.490E-14	0.
7	0.5127	SLV2-NL	NonStatic	Min	-450.243	-296.777	-3.566E-14	0.
7	0.	SLV3-NL	NonStatic	Max	-494.543	-258.819	-3.108E-14	0.
7	0.25635	SLV3-NL	NonStatic	Max	-498.419	-263.493	-3.165E-14	0.
7	0.5127	SLV3-NL	NonStatic	Max	-502.295	-268.166	-3.222E-14	0.
7	0.	SLV3-NL	NonStatic	Min	-494.543	-258.819	-3.108E-14	0.
7	0.25635	SLV3-NL	NonStatic	Min	-498.419	-263.493	-3.165E-14	0.
7	0.5127	SLV3-NL	NonStatic	Min	-502.295	-268.166	-3.222E-14	0.
7	0.	SLV4-NL	NonStatic	Max	-449.052	-284.333	-3.414E-14	0.
7	0.25635	SLV4-NL	NonStatic	Max	-448.901	-290.403	-3.488E-14	0.
7	0.5127	SLV4-NL	NonStatic	Max	-448.75	-296.472	-3.562E-14	0.
7	0.	SLV4-NL	NonStatic	Min	-449.052	-284.333	-3.414E-14	0.
7	0.25635	SLV4-NL	NonStatic	Min	-448.901	-290.403	-3.488E-14	0.
7	0.5127	SLV4-NL	NonStatic	Min	-448.75	-296.472	-3.562E-14	0.
7	0.	SLV5-NL	NonStatic	Max	-440.69	-281.65	-3.382E-14	0.
7	0.25635	SLV5-NL	NonStatic	Max	-443.272	-287.144	-3.449E-14	0.

Table: Element Forces - Frames, Part 1 of 2

Frame	Station	OutputCase	CaseType	StepType	P	V2	V3	T
	m				KN	KN	KN	KN-m
7	0.5127	SLV5-NL	NonStatic	Max	-445.853	-292.637	-3.516E-14	0.
7	0.	SLV5-NL	NonStatic	Min	-440.69	-281.65	-3.382E-14	0.
7	0.25635	SLV5-NL	NonStatic	Min	-443.272	-287.144	-3.449E-14	0.
7	0.5127	SLV5-NL	NonStatic	Min	-445.853	-292.637	-3.516E-14	0.
7	0.	SLV6-NL	NonStatic	Max	-427.276	-289.248	-3.473E-14	0.
7	0.25635	SLV6-NL	NonStatic	Max	-428.649	-295.16	-3.545E-14	0.
7	0.5127	SLV6-NL	NonStatic	Max	-430.023	-301.073	-3.617E-14	0.
7	0.	SLV6-NL	NonStatic	Min	-427.276	-289.248	-3.473E-14	0.
7	0.25635	SLV6-NL	NonStatic	Min	-428.649	-295.16	-3.545E-14	0.
7	0.5127	SLV6-NL	NonStatic	Min	-430.023	-301.073	-3.617E-14	0.
7	0.	SLV7-NL	NonStatic	Max	-436.048	-281.648	-3.382E-14	0.
7	0.25635	SLV7-NL	NonStatic	Max	-438.453	-286.632	-3.443E-14	0.
7	0.5127	SLV7-NL	NonStatic	Max	-440.858	-291.615	-3.504E-14	0.
7	0.	SLV7-NL	NonStatic	Min	-436.048	-281.648	-3.382E-14	0.
7	0.25635	SLV7-NL	NonStatic	Min	-438.453	-286.632	-3.443E-14	0.
7	0.5127	SLV7-NL	NonStatic	Min	-440.858	-291.615	-3.504E-14	0.
7	0.	SLV8-NL	NonStatic	Max	-422.651	-289.252	-3.473E-14	0.
7	0.25635	SLV8-NL	NonStatic	Max	-423.848	-294.654	-3.539E-14	0.
7	0.5127	SLV8-NL	NonStatic	Max	-425.044	-300.056	-3.605E-14	0.
7	0.	SLV8-NL	NonStatic	Min	-422.651	-289.252	-3.473E-14	0.
7	0.25635	SLV8-NL	NonStatic	Min	-423.848	-294.654	-3.539E-14	0.
7	0.5127	SLV8-NL	NonStatic	Min	-425.044	-300.056	-3.605E-14	0.
7	0.	SLV9-NL	NonStatic	Max	-466.658	-268.88	-3.228E-14	0.
7	0.25635	SLV9-NL	NonStatic	Max	-469.514	-273.907	-3.290E-14	0.
7	0.5127	SLV9-NL	NonStatic	Max	-472.37	-278.934	-3.351E-14	0.
7	0.	SLV9-NL	NonStatic	Min	-466.658	-268.88	-3.228E-14	0.
7	0.25635	SLV9-NL	NonStatic	Min	-469.514	-273.907	-3.290E-14	0.
7	0.5127	SLV9-NL	NonStatic	Min	-472.37	-278.934	-3.351E-14	0.
7	0.	SLV10-NL	NonStatic	Max	-397.096	-290.483	-3.488E-14	0.
7	0.25635	SLV10-NL	NonStatic	Max	-397.965	-296.199	-3.558E-14	0.
7	0.5127	SLV10-NL	NonStatic	Max	-398.834	-301.915	-3.628E-14	0.
7	0.	SLV10-NL	NonStatic	Min	-397.096	-290.483	-3.488E-14	0.
7	0.25635	SLV10-NL	NonStatic	Min	-397.965	-296.199	-3.558E-14	0.
7	0.5127	SLV10-NL	NonStatic	Min	-398.834	-301.915	-3.628E-14	0.
7	0.	SLV11-NL	NonStatic	Max	-471.	-278.824	-3.348E-14	0.
7	0.25635	SLV11-NL	NonStatic	Max	-473.909	-284.003	-3.411E-14	0.
7	0.5127	SLV11-NL	NonStatic	Max	-476.818	-289.183	-3.475E-14	0.
7	0.	SLV11-NL	NonStatic	Min	-471.	-278.824	-3.348E-14	0.
7	0.25635	SLV11-NL	NonStatic	Min	-473.909	-284.003	-3.411E-14	0.
7	0.5127	SLV11-NL	NonStatic	Min	-476.818	-289.183	-3.475E-14	0.
7	0.	SLV12-NL	NonStatic	Max	-401.462	-300.419	-3.607E-14	0.
7	0.25635	SLV12-NL	NonStatic	Max	-402.384	-306.288	-3.679E-14	0.
7	0.5127	SLV12-NL	NonStatic	Max	-403.306	-312.157	-3.751E-14	0.
7	0.	SLV12-NL	NonStatic	Min	-401.462	-300.419	-3.607E-14	0.
7	0.25635	SLV12-NL	NonStatic	Min	-402.384	-306.288	-3.679E-14	0.
7	0.5127	SLV12-NL	NonStatic	Min	-403.306	-312.157	-3.751E-14	0.
7	0.	SLV13-NL	NonStatic	Max	-423.209	-269.589	-3.237E-14	0.
7	0.25635	SLV13-NL	NonStatic	Max	-425.308	-274.679	-3.299E-14	0.
7	0.5127	SLV13-NL	NonStatic	Max	-427.407	-279.768	-3.361E-14	0.
7	0.	SLV13-NL	NonStatic	Min	-423.209	-269.589	-3.237E-14	0.
7	0.25635	SLV13-NL	NonStatic	Min	-425.308	-274.679	-3.299E-14	0.
7	0.5127	SLV13-NL	NonStatic	Min	-427.407	-279.768	-3.361E-14	0.
7	0.	SLV14-NL	NonStatic	Max	-403.04	-275.865	-3.312E-14	0.
7	0.25635	SLV14-NL	NonStatic	Max	-404.542	-281.162	-3.377E-14	0.

Table: Element Forces - Frames, Part 1 of 2

Frame	Station	OutputCase	CaseType	StepType	P	V2	V3	T
	m				KN	KN	KN	KN-m
7	0.5127	SLV14-NL	NonStatic	Max	-406.045	-286.458	-3.442E-14	0.
7	0.	SLV14-NL	NonStatic	Min	-403.04	-275.865	-3.312E-14	0.
7	0.25635	SLV14-NL	NonStatic	Min	-404.542	-281.162	-3.377E-14	0.
7	0.5127	SLV14-NL	NonStatic	Min	-406.045	-286.458	-3.442E-14	0.
7	0.	SLV15-NL	NonStatic	Max	-438.67	-302.371	-3.630E-14	0.
7	0.25635	SLV15-NL	NonStatic	Max	-440.945	-307.971	-3.699E-14	0.
7	0.5127	SLV15-NL	NonStatic	Max	-443.22	-313.57	-3.768E-14	0.
7	0.	SLV15-NL	NonStatic	Min	-438.67	-302.371	-3.630E-14	0.
7	0.25635	SLV15-NL	NonStatic	Min	-440.945	-307.971	-3.699E-14	0.
7	0.5127	SLV15-NL	NonStatic	Min	-443.22	-313.57	-3.768E-14	0.
7	0.	SLV16-NL	NonStatic	Max	-418.775	-308.601	-3.705E-14	0.
7	0.25635	SLV16-NL	NonStatic	Max	-420.454	-314.407	-3.776E-14	0.
7	0.5127	SLV16-NL	NonStatic	Max	-422.133	-320.213	-3.847E-14	0.
7	0.	SLV16-NL	NonStatic	Min	-418.775	-308.601	-3.705E-14	0.
7	0.25635	SLV16-NL	NonStatic	Min	-420.454	-314.407	-3.776E-14	0.
7	0.5127	SLV16-NL	NonStatic	Min	-422.133	-320.213	-3.847E-14	0.
8	0.	SLU 1-NL	NonStatic	Max	-584.23	-352.901	-4.237E-14	0.
8	0.25635	SLU 1-NL	NonStatic	Max	-586.252	-360.12	-4.325E-14	0.
8	0.5127	SLU 1-NL	NonStatic	Max	-588.274	-367.338	-4.414E-14	0.
8	0.	SLU 1-NL	NonStatic	Min	-584.23	-352.901	-4.237E-14	0.
8	0.25635	SLU 1-NL	NonStatic	Min	-586.252	-360.12	-4.325E-14	0.
8	0.5127	SLU 1-NL	NonStatic	Min	-588.274	-367.338	-4.414E-14	0.
8	0.	SLU 2-NL	NonStatic	Max	-470.747	-383.895	-4.609E-14	0.
8	0.25635	SLU 2-NL	NonStatic	Max	-472.768	-391.113	-4.698E-14	0.
8	0.5127	SLU 2-NL	NonStatic	Max	-474.79	-398.331	-4.786E-14	0.
8	0.	SLU 2-NL	NonStatic	Min	-470.747	-383.895	-4.609E-14	0.
8	0.25635	SLU 2-NL	NonStatic	Min	-472.768	-391.113	-4.698E-14	0.
8	0.5127	SLU 2-NL	NonStatic	Min	-474.79	-398.331	-4.786E-14	0.
8	0.	SLU 3-NL	NonStatic	Max	-512.765	-200.208	-2.403E-14	0.
8	0.25635	SLU 3-NL	NonStatic	Max	-514.32	-205.76	-2.471E-14	0.
8	0.5127	SLU 3-NL	NonStatic	Max	-515.875	-211.313	-2.539E-14	0.
8	0.	SLU 3-NL	NonStatic	Min	-512.765	-200.208	-2.403E-14	0.
8	0.25635	SLU 3-NL	NonStatic	Min	-514.32	-205.76	-2.471E-14	0.
8	0.5127	SLU 3-NL	NonStatic	Min	-515.875	-211.313	-2.539E-14	0.
8	0.	SLU 4-NL	NonStatic	Max	-578.534	-357.32	-4.290E-14	0.
8	0.25635	SLU 4-NL	NonStatic	Max	-580.556	-364.538	-4.378E-14	0.
8	0.5127	SLU 4-NL	NonStatic	Max	-582.577	-371.756	-4.467E-14	0.
8	0.	SLU 4-NL	NonStatic	Min	-578.534	-357.32	-4.290E-14	0.
8	0.25635	SLU 4-NL	NonStatic	Min	-580.556	-364.538	-4.378E-14	0.
8	0.5127	SLU 4-NL	NonStatic	Min	-582.577	-371.756	-4.467E-14	0.
8	0.	SLU 5-NL	NonStatic	Max	-515.815	-202.552	-2.432E-14	0.
8	0.25635	SLU 5-NL	NonStatic	Max	-517.37	-208.105	-2.500E-14	0.
8	0.5127	SLU 5-NL	NonStatic	Max	-518.925	-213.657	-2.568E-14	0.
8	0.	SLU 5-NL	NonStatic	Min	-515.815	-202.552	-2.432E-14	0.
8	0.25635	SLU 5-NL	NonStatic	Min	-517.37	-208.105	-2.500E-14	0.
8	0.5127	SLU 5-NL	NonStatic	Min	-518.925	-213.657	-2.568E-14	0.
8	0.	SLU 6-NL	NonStatic	Max	-573.459	-353.001	-4.238E-14	0.
8	0.25635	SLU 6-NL	NonStatic	Max	-575.481	-360.219	-4.326E-14	0.
8	0.5127	SLU 6-NL	NonStatic	Max	-577.503	-367.437	-4.415E-14	0.
8	0.	SLU 6-NL	NonStatic	Min	-573.459	-353.001	-4.238E-14	0.
8	0.25635	SLU 6-NL	NonStatic	Min	-575.481	-360.219	-4.326E-14	0.
8	0.5127	SLU 6-NL	NonStatic	Min	-577.503	-367.437	-4.415E-14	0.
8	0.	SLU 7-NL	NonStatic	Max	-510.298	-197.735	-2.374E-14	0.
8	0.25635	SLU 7-NL	NonStatic	Max	-511.853	-203.288	-2.442E-14	0.

Table: Element Forces - Frames, Part 1 of 2

Frame	Station	OutputCase	CaseType	StepType	P	V2	V3	T
	m				KN	KN	KN	KN-m
8	0.5127	SLU 7-NL	NonStatic	Max	-513.408	-208.84	-2.510E-14	0.
8	0.	SLU 7-NL	NonStatic	Min	-510.298	-197.735	-2.374E-14	0.
8	0.25635	SLU 7-NL	NonStatic	Min	-511.853	-203.288	-2.442E-14	0.
8	0.5127	SLU 7-NL	NonStatic	Min	-513.408	-208.84	-2.510E-14	0.
8	0.	SLE-C-NL	NonStatic	Max	-442.77	-266.081	-3.195E-14	0.
8	0.25635	SLE-C-NL	NonStatic	Max	-444.325	-271.633	-3.263E-14	0.
8	0.5127	SLE-C-NL	NonStatic	Max	-445.88	-277.186	-3.331E-14	0.
8	0.	SLE-C-NL	NonStatic	Min	-442.77	-266.081	-3.195E-14	0.
8	0.25635	SLE-C-NL	NonStatic	Min	-444.325	-271.633	-3.263E-14	0.
8	0.5127	SLE-C-NL	NonStatic	Min	-445.88	-277.186	-3.331E-14	0.
8	0.	SLE-F-1-NL	NonStatic	Max	-411.535	-265.251	-3.185E-14	0.
8	0.25635	SLE-F-1-NL	NonStatic	Max	-413.09	-270.803	-3.253E-14	0.
8	0.5127	SLE-F-1-NL	NonStatic	Max	-414.645	-276.356	-3.321E-14	0.
8	0.	SLE-F-1-NL	NonStatic	Min	-411.535	-265.251	-3.185E-14	0.
8	0.25635	SLE-F-1-NL	NonStatic	Min	-413.09	-270.803	-3.253E-14	0.
8	0.5127	SLE-F-1-NL	NonStatic	Min	-414.645	-276.356	-3.321E-14	0.
8	0.	SLE-F-2-NL	NonStatic	Max	-418.435	-227.269	-2.728E-14	0.
8	0.25635	SLE-F-2-NL	NonStatic	Max	-419.99	-232.822	-2.796E-14	0.
8	0.5127	SLE-F-2-NL	NonStatic	Max	-421.546	-238.374	-2.864E-14	0.
8	0.	SLE-F-2-NL	NonStatic	Min	-418.435	-227.269	-2.728E-14	0.
8	0.25635	SLE-F-2-NL	NonStatic	Min	-419.99	-232.822	-2.796E-14	0.
8	0.5127	SLE-F-2-NL	NonStatic	Min	-421.546	-238.374	-2.864E-14	0.
8	0.	SLE-F-3-NL	NonStatic	Max	-416.869	-225.119	-2.703E-14	0.
8	0.25635	SLE-F-3-NL	NonStatic	Max	-418.424	-230.671	-2.771E-14	0.
8	0.5127	SLE-F-3-NL	NonStatic	Max	-419.979	-236.224	-2.839E-14	0.
8	0.	SLE-F-3-NL	NonStatic	Min	-416.869	-225.119	-2.703E-14	0.
8	0.25635	SLE-F-3-NL	NonStatic	Min	-418.424	-230.671	-2.771E-14	0.
8	0.5127	SLE-F-3-NL	NonStatic	Min	-419.979	-236.224	-2.839E-14	0.
8	0.	SLE-QP-NL	NonStatic	Max	-399.293	-231.198	-2.776E-14	0.
8	0.25635	SLE-QP-NL	NonStatic	Max	-400.848	-236.751	-2.844E-14	0.
8	0.5127	SLE-QP-NL	NonStatic	Max	-402.403	-242.303	-2.912E-14	0.
8	0.	SLE-QP-NL	NonStatic	Min	-399.293	-231.198	-2.776E-14	0.
8	0.25635	SLE-QP-NL	NonStatic	Min	-400.848	-236.751	-2.844E-14	0.
8	0.5127	SLE-QP-NL	NonStatic	Min	-402.403	-242.303	-2.912E-14	0.
8	0.	SLV1-NL	NonStatic	Max	-489.033	-216.761	-2.602E-14	0.
8	0.25635	SLV1-NL	NonStatic	Max	-492.391	-221.892	-2.665E-14	0.
8	0.5127	SLV1-NL	NonStatic	Max	-495.749	-227.024	-2.728E-14	0.
8	0.	SLV1-NL	NonStatic	Min	-489.033	-216.761	-2.602E-14	0.
8	0.25635	SLV1-NL	NonStatic	Min	-492.391	-221.892	-2.665E-14	0.
8	0.5127	SLV1-NL	NonStatic	Min	-495.749	-227.024	-2.728E-14	0.
8	0.	SLV2-NL	NonStatic	Max	-434.195	-230.845	-2.771E-14	0.
8	0.25635	SLV2-NL	NonStatic	Max	-433.99	-236.974	-2.846E-14	0.
8	0.5127	SLV2-NL	NonStatic	Max	-433.786	-243.103	-2.921E-14	0.
8	0.	SLV2-NL	NonStatic	Min	-434.195	-230.845	-2.771E-14	0.
8	0.25635	SLV2-NL	NonStatic	Min	-433.99	-236.974	-2.846E-14	0.
8	0.5127	SLV2-NL	NonStatic	Min	-433.786	-243.103	-2.921E-14	0.
8	0.	SLV3-NL	NonStatic	Max	-487.543	-216.789	-2.603E-14	0.
8	0.25635	SLV3-NL	NonStatic	Max	-490.857	-221.765	-2.664E-14	0.
8	0.5127	SLV3-NL	NonStatic	Max	-494.172	-226.741	-2.725E-14	0.
8	0.	SLV3-NL	NonStatic	Min	-487.543	-216.789	-2.603E-14	0.
8	0.25635	SLV3-NL	NonStatic	Min	-490.857	-221.765	-2.664E-14	0.
8	0.5127	SLV3-NL	NonStatic	Min	-494.172	-226.741	-2.725E-14	0.
8	0.	SLV4-NL	NonStatic	Max	-432.71	-230.883	-2.772E-14	0.
8	0.25635	SLV4-NL	NonStatic	Max	-432.462	-236.857	-2.845E-14	0.

Table: Element Forces - Frames, Part 1 of 2

Frame	Station	OutputCase	CaseType	StepType	P	V2	V3	T
	m				KN	KN	KN	KN-m
8	0.5127	SLV4-NL	NonStatic	Max	-432.214	-242.83	-2.918E-14	0.
8	0.	SLV4-NL	NonStatic	Min	-432.71	-230.883	-2.772E-14	0.
8	0.25635	SLV4-NL	NonStatic	Min	-432.462	-236.857	-2.845E-14	0.
8	0.5127	SLV4-NL	NonStatic	Min	-432.214	-242.83	-2.918E-14	0.
8	0.	SLV5-NL	NonStatic	Max	-429.872	-232.788	-2.795E-14	0.
8	0.25635	SLV5-NL	NonStatic	Max	-432.034	-238.451	-2.864E-14	0.
8	0.5127	SLV5-NL	NonStatic	Max	-434.196	-244.114	-2.933E-14	0.
8	0.	SLV5-NL	NonStatic	Min	-429.872	-232.788	-2.795E-14	0.
8	0.25635	SLV5-NL	NonStatic	Min	-432.034	-238.451	-2.864E-14	0.
8	0.5127	SLV5-NL	NonStatic	Min	-434.196	-244.114	-2.933E-14	0.
8	0.	SLV6-NL	NonStatic	Max	-413.646	-237.329	-2.849E-14	0.
8	0.25635	SLV6-NL	NonStatic	Max	-414.74	-243.291	-2.922E-14	0.
8	0.5127	SLV6-NL	NonStatic	Max	-415.833	-249.253	-2.995E-14	0.
8	0.	SLV6-NL	NonStatic	Min	-413.646	-237.329	-2.849E-14	0.
8	0.25635	SLV6-NL	NonStatic	Min	-414.74	-243.291	-2.922E-14	0.
8	0.5127	SLV6-NL	NonStatic	Min	-415.833	-249.253	-2.995E-14	0.
8	0.	SLV7-NL	NonStatic	Max	-424.905	-232.886	-2.796E-14	0.
8	0.25635	SLV7-NL	NonStatic	Max	-426.922	-238.029	-2.859E-14	0.
8	0.5127	SLV7-NL	NonStatic	Max	-428.938	-243.172	-2.922E-14	0.
8	0.	SLV7-NL	NonStatic	Min	-424.905	-232.886	-2.796E-14	0.
8	0.25635	SLV7-NL	NonStatic	Min	-426.922	-238.029	-2.859E-14	0.
8	0.5127	SLV7-NL	NonStatic	Min	-428.938	-243.172	-2.922E-14	0.
8	0.	SLV8-NL	NonStatic	Max	-408.695	-237.456	-2.851E-14	0.
8	0.25635	SLV8-NL	NonStatic	Max	-409.643	-242.898	-2.917E-14	0.
8	0.5127	SLV8-NL	NonStatic	Max	-410.591	-248.34	-2.984E-14	0.
8	0.	SLV8-NL	NonStatic	Min	-408.695	-237.456	-2.851E-14	0.
8	0.25635	SLV8-NL	NonStatic	Min	-409.643	-242.898	-2.917E-14	0.
8	0.5127	SLV8-NL	NonStatic	Min	-410.591	-248.34	-2.984E-14	0.
8	0.	SLV9-NL	NonStatic	Max	-457.098	-223.33	-2.681E-14	0.
8	0.25635	SLV9-NL	NonStatic	Max	-459.373	-228.596	-2.746E-14	0.
8	0.5127	SLV9-NL	NonStatic	Max	-461.648	-233.863	-2.810E-14	0.
8	0.	SLV9-NL	NonStatic	Min	-457.098	-223.33	-2.681E-14	0.
8	0.25635	SLV9-NL	NonStatic	Min	-459.373	-228.596	-2.746E-14	0.
8	0.5127	SLV9-NL	NonStatic	Min	-461.648	-233.863	-2.810E-14	0.
8	0.	SLV10-NL	NonStatic	Max	-382.422	-237.514	-2.851E-14	0.
8	0.25635	SLV10-NL	NonStatic	Max	-383.213	-243.196	-2.921E-14	0.
8	0.5127	SLV10-NL	NonStatic	Max	-384.005	-248.878	-2.991E-14	0.
8	0.	SLV10-NL	NonStatic	Min	-382.422	-237.514	-2.851E-14	0.
8	0.25635	SLV10-NL	NonStatic	Min	-383.213	-243.196	-2.921E-14	0.
8	0.5127	SLV10-NL	NonStatic	Min	-384.005	-248.878	-2.991E-14	0.
8	0.	SLV11-NL	NonStatic	Max	-460.986	-231.485	-2.779E-14	0.
8	0.25635	SLV11-NL	NonStatic	Max	-463.305	-236.908	-2.845E-14	0.
8	0.5127	SLV11-NL	NonStatic	Max	-465.624	-242.331	-2.912E-14	0.
8	0.	SLV11-NL	NonStatic	Min	-460.986	-231.485	-2.779E-14	0.
8	0.25635	SLV11-NL	NonStatic	Min	-463.305	-236.908	-2.845E-14	0.
8	0.5127	SLV11-NL	NonStatic	Min	-465.624	-242.331	-2.912E-14	0.
8	0.	SLV12-NL	NonStatic	Max	-386.333	-245.698	-2.950E-14	0.
8	0.25635	SLV12-NL	NonStatic	Max	-387.168	-251.536	-3.021E-14	0.
8	0.5127	SLV12-NL	NonStatic	Max	-388.003	-257.375	-3.093E-14	0.
8	0.	SLV12-NL	NonStatic	Min	-386.333	-245.698	-2.950E-14	0.
8	0.25635	SLV12-NL	NonStatic	Min	-387.168	-251.536	-3.021E-14	0.
8	0.5127	SLV12-NL	NonStatic	Min	-388.003	-257.375	-3.093E-14	0.
8	0.	SLV13-NL	NonStatic	Max	-412.134	-222.436	-2.670E-14	0.
8	0.25635	SLV13-NL	NonStatic	Max	-413.839	-227.667	-2.734E-14	0.

Table: Element Forces - Frames, Part 1 of 2

Frame	Station	OutputCase	CaseType	StepType	P	V2	V3	T
	m				KN	KN	KN	KN-m
8	0.5127	SLV13-NL	NonStatic	Max	-415.544	-232.897	-2.799E-14	0.
8	0.	SLV13-NL	NonStatic	Min	-412.134	-222.436	-2.670E-14	0.
8	0.25635	SLV13-NL	NonStatic	Min	-413.839	-227.667	-2.734E-14	0.
8	0.5127	SLV13-NL	NonStatic	Min	-415.544	-232.897	-2.799E-14	0.
8	0.	SLV14-NL	NonStatic	Max	-390.431	-226.837	-2.723E-14	0.
8	0.25635	SLV14-NL	NonStatic	Max	-391.691	-232.192	-2.789E-14	0.
8	0.5127	SLV14-NL	NonStatic	Max	-392.951	-237.546	-2.854E-14	0.
8	0.	SLV14-NL	NonStatic	Min	-390.431	-226.837	-2.723E-14	0.
8	0.25635	SLV14-NL	NonStatic	Min	-391.691	-232.192	-2.789E-14	0.
8	0.5127	SLV14-NL	NonStatic	Min	-392.951	-237.546	-2.854E-14	0.
8	0.	SLV15-NL	NonStatic	Max	-426.101	-249.341	-2.993E-14	0.
8	0.25635	SLV15-NL	NonStatic	Max	-427.951	-255.091	-3.064E-14	0.
8	0.5127	SLV15-NL	NonStatic	Max	-429.802	-260.841	-3.134E-14	0.
8	0.	SLV15-NL	NonStatic	Min	-426.101	-249.341	-2.993E-14	0.
8	0.25635	SLV15-NL	NonStatic	Min	-427.951	-255.091	-3.064E-14	0.
8	0.5127	SLV15-NL	NonStatic	Min	-429.802	-260.841	-3.134E-14	0.
8	0.	SLV16-NL	NonStatic	Max	-404.673	-253.775	-3.047E-14	0.
8	0.25635	SLV16-NL	NonStatic	Max	-406.079	-259.65	-3.119E-14	0.
8	0.5127	SLV16-NL	NonStatic	Max	-407.484	-265.524	-3.191E-14	0.
8	0.	SLV16-NL	NonStatic	Min	-404.673	-253.775	-3.047E-14	0.
8	0.25635	SLV16-NL	NonStatic	Min	-406.079	-259.65	-3.119E-14	0.
8	0.5127	SLV16-NL	NonStatic	Min	-407.484	-265.524	-3.191E-14	0.
9	0.	SLU 1-NL	NonStatic	Max	-568.724	-275.15	-3.303E-14	0.
9	0.25635	SLU 1-NL	NonStatic	Max	-570.304	-282.477	-3.393E-14	0.
9	0.5127	SLU 1-NL	NonStatic	Max	-571.885	-289.805	-3.482E-14	0.
9	0.	SLU 1-NL	NonStatic	Min	-568.724	-275.15	-3.303E-14	0.
9	0.25635	SLU 1-NL	NonStatic	Min	-570.304	-282.477	-3.393E-14	0.
9	0.5127	SLU 1-NL	NonStatic	Min	-571.885	-289.805	-3.482E-14	0.
9	0.	SLU 2-NL	NonStatic	Max	-453.565	-299.238	-3.592E-14	0.
9	0.25635	SLU 2-NL	NonStatic	Max	-455.145	-306.566	-3.682E-14	0.
9	0.5127	SLU 2-NL	NonStatic	Max	-456.725	-313.893	-3.772E-14	0.
9	0.	SLU 2-NL	NonStatic	Min	-453.565	-299.238	-3.592E-14	0.
9	0.25635	SLU 2-NL	NonStatic	Min	-455.145	-306.566	-3.682E-14	0.
9	0.5127	SLU 2-NL	NonStatic	Min	-456.725	-313.893	-3.772E-14	0.
9	0.	SLU 3-NL	NonStatic	Max	-504.701	-155.98	-1.872E-14	0.
9	0.25635	SLU 3-NL	NonStatic	Max	-505.917	-161.617	-1.941E-14	0.
9	0.5127	SLU 3-NL	NonStatic	Max	-507.132	-167.253	-2.010E-14	0.
9	0.	SLU 3-NL	NonStatic	Min	-504.701	-155.98	-1.872E-14	0.
9	0.25635	SLU 3-NL	NonStatic	Min	-505.917	-161.617	-1.941E-14	0.
9	0.5127	SLU 3-NL	NonStatic	Min	-507.132	-167.253	-2.010E-14	0.
9	0.	SLU 4-NL	NonStatic	Max	-562.647	-283.34	-3.401E-14	0.
9	0.25635	SLU 4-NL	NonStatic	Max	-564.227	-290.667	-3.491E-14	0.
9	0.5127	SLU 4-NL	NonStatic	Max	-565.807	-297.995	-3.581E-14	0.
9	0.	SLU 4-NL	NonStatic	Min	-562.647	-283.34	-3.401E-14	0.
9	0.25635	SLU 4-NL	NonStatic	Min	-564.227	-290.667	-3.491E-14	0.
9	0.5127	SLU 4-NL	NonStatic	Min	-565.807	-297.995	-3.581E-14	0.
9	0.	SLU 5-NL	NonStatic	Max	-507.467	-162.903	-1.955E-14	0.
9	0.25635	SLU 5-NL	NonStatic	Max	-508.683	-168.539	-2.024E-14	0.
9	0.5127	SLU 5-NL	NonStatic	Max	-509.898	-174.176	-2.093E-14	0.
9	0.	SLU 5-NL	NonStatic	Min	-507.467	-162.903	-1.955E-14	0.
9	0.25635	SLU 5-NL	NonStatic	Min	-508.683	-168.539	-2.024E-14	0.
9	0.5127	SLU 5-NL	NonStatic	Min	-509.898	-174.176	-2.093E-14	0.
9	0.	SLU 6-NL	NonStatic	Max	-558.09	-270.476	-3.247E-14	0.
9	0.25635	SLU 6-NL	NonStatic	Max	-559.67	-277.804	-3.337E-14	0.

Table: Element Forces - Frames, Part 1 of 2

Frame	Station	OutputCase	CaseType	StepType	P	V2	V3	T
	m				KN	KN	KN	KN-m
9	0.5127	SLU 6-NL	NonStatic	Max	-561.25	-285.131	-3.426E-14	0.
9	0.	SLU 6-NL	NonStatic	Min	-558.09	-270.476	-3.247E-14	0.
9	0.25635	SLU 6-NL	NonStatic	Min	-559.67	-277.804	-3.337E-14	0.
9	0.5127	SLU 6-NL	NonStatic	Min	-561.25	-285.131	-3.426E-14	0.
9	0.	SLU 7-NL	NonStatic	Max	-502.526	-148.965	-1.788E-14	0.
9	0.25635	SLU 7-NL	NonStatic	Max	-503.741	-154.601	-1.857E-14	0.
9	0.5127	SLU 7-NL	NonStatic	Max	-504.956	-160.238	-1.926E-14	0.
9	0.	SLU 7-NL	NonStatic	Min	-502.526	-148.965	-1.788E-14	0.
9	0.25635	SLU 7-NL	NonStatic	Min	-503.741	-154.601	-1.857E-14	0.
9	0.5127	SLU 7-NL	NonStatic	Min	-504.956	-160.238	-1.926E-14	0.
9	0.	SLE-C-NL	NonStatic	Max	-431.138	-207.431	-2.490E-14	0.
9	0.25635	SLE-C-NL	NonStatic	Max	-432.354	-213.068	-2.559E-14	0.
9	0.5127	SLE-C-NL	NonStatic	Max	-433.569	-218.704	-2.628E-14	0.
9	0.	SLE-C-NL	NonStatic	Min	-431.138	-207.431	-2.490E-14	0.
9	0.25635	SLE-C-NL	NonStatic	Min	-432.354	-213.068	-2.559E-14	0.
9	0.5127	SLE-C-NL	NonStatic	Min	-433.569	-218.704	-2.628E-14	0.
9	0.	SLE-F-1-NL	NonStatic	Max	-399.949	-206.733	-2.482E-14	0.
9	0.25635	SLE-F-1-NL	NonStatic	Max	-401.165	-212.37	-2.551E-14	0.
9	0.5127	SLE-F-1-NL	NonStatic	Max	-402.38	-218.007	-2.620E-14	0.
9	0.	SLE-F-1-NL	NonStatic	Min	-399.949	-206.733	-2.482E-14	0.
9	0.25635	SLE-F-1-NL	NonStatic	Min	-401.165	-212.37	-2.551E-14	0.
9	0.5127	SLE-F-1-NL	NonStatic	Min	-402.38	-218.007	-2.620E-14	0.
9	0.	SLE-F-2-NL	NonStatic	Max	-408.873	-178.358	-2.141E-14	0.
9	0.25635	SLE-F-2-NL	NonStatic	Max	-410.088	-183.995	-2.210E-14	0.
9	0.5127	SLE-F-2-NL	NonStatic	Max	-411.304	-189.631	-2.279E-14	0.
9	0.	SLE-F-2-NL	NonStatic	Min	-408.873	-178.358	-2.141E-14	0.
9	0.25635	SLE-F-2-NL	NonStatic	Min	-410.088	-183.995	-2.210E-14	0.
9	0.5127	SLE-F-2-NL	NonStatic	Min	-411.304	-189.631	-2.279E-14	0.
9	0.	SLE-F-3-NL	NonStatic	Max	-407.497	-173.999	-2.089E-14	0.
9	0.25635	SLE-F-3-NL	NonStatic	Max	-408.712	-179.635	-2.158E-14	0.
9	0.5127	SLE-F-3-NL	NonStatic	Max	-409.928	-185.272	-2.227E-14	0.
9	0.	SLE-F-3-NL	NonStatic	Min	-407.497	-173.999	-2.089E-14	0.
9	0.25635	SLE-F-3-NL	NonStatic	Min	-408.712	-179.635	-2.158E-14	0.
9	0.5127	SLE-F-3-NL	NonStatic	Min	-409.928	-185.272	-2.227E-14	0.
9	0.	SLE-QP-NL	NonStatic	Max	-389.555	-180.066	-2.161E-14	0.
9	0.25635	SLE-QP-NL	NonStatic	Max	-390.771	-185.702	-2.230E-14	0.
9	0.5127	SLE-QP-NL	NonStatic	Max	-391.986	-191.339	-2.299E-14	0.
9	0.	SLE-QP-NL	NonStatic	Min	-389.555	-180.066	-2.161E-14	0.
9	0.25635	SLE-QP-NL	NonStatic	Min	-390.771	-185.702	-2.230E-14	0.
9	0.5127	SLE-QP-NL	NonStatic	Min	-391.986	-191.339	-2.299E-14	0.
9	0.	SLV1-NL	NonStatic	Max	-483.591	-172.621	-2.072E-14	0.
9	0.25635	SLV1-NL	NonStatic	Max	-486.352	-178.007	-2.138E-14	0.
9	0.5127	SLV1-NL	NonStatic	Max	-489.113	-183.393	-2.204E-14	0.
9	0.	SLV1-NL	NonStatic	Min	-483.591	-172.621	-2.072E-14	0.
9	0.25635	SLV1-NL	NonStatic	Min	-486.352	-178.007	-2.138E-14	0.
9	0.5127	SLV1-NL	NonStatic	Min	-489.113	-183.393	-2.204E-14	0.
9	0.	SLV2-NL	NonStatic	Max	-421.03	-176.213	-2.115E-14	0.
9	0.25635	SLV2-NL	NonStatic	Max	-420.734	-182.258	-2.189E-14	0.
9	0.5127	SLV2-NL	NonStatic	Max	-420.438	-188.304	-2.263E-14	0.
9	0.	SLV2-NL	NonStatic	Min	-421.03	-176.213	-2.115E-14	0.
9	0.25635	SLV2-NL	NonStatic	Min	-420.734	-182.258	-2.189E-14	0.
9	0.5127	SLV2-NL	NonStatic	Min	-420.438	-188.304	-2.263E-14	0.
9	0.	SLV3-NL	NonStatic	Max	-482.021	-172.678	-2.073E-14	0.
9	0.25635	SLV3-NL	NonStatic	Max	-484.748	-177.906	-2.137E-14	0.

Table: Element Forces - Frames, Part 1 of 2

Frame	Station	OutputCase	CaseType	StepType	P	V2	V3	T
	m				KN	KN	KN	KN-m
9	0.5127	SLV3-NL	NonStatic	Max	-487.475	-183.134	-2.201E-14	0.
9	0.	SLV3-NL	NonStatic	Min	-482.021	-172.678	-2.073E-14	0.
9	0.25635	SLV3-NL	NonStatic	Min	-484.748	-177.906	-2.137E-14	0.
9	0.5127	SLV3-NL	NonStatic	Min	-487.475	-183.134	-2.201E-14	0.
9	0.	SLV4-NL	NonStatic	Max	-419.464	-176.286	-2.116E-14	0.
9	0.25635	SLV4-NL	NonStatic	Max	-419.134	-182.173	-2.188E-14	0.
9	0.5127	SLV4-NL	NonStatic	Max	-418.804	-188.06	-2.260E-14	0.
9	0.	SLV4-NL	NonStatic	Min	-419.464	-176.286	-2.116E-14	0.
9	0.25635	SLV4-NL	NonStatic	Min	-419.134	-182.173	-2.188E-14	0.
9	0.5127	SLV4-NL	NonStatic	Min	-418.804	-188.06	-2.260E-14	0.
9	0.	SLV5-NL	NonStatic	Max	-421.228	-182.225	-2.187E-14	0.
9	0.25635	SLV5-NL	NonStatic	Max	-422.959	-188.027	-2.258E-14	0.
9	0.5127	SLV5-NL	NonStatic	Max	-424.69	-193.828	-2.329E-14	0.
9	0.	SLV5-NL	NonStatic	Min	-421.228	-182.225	-2.187E-14	0.
9	0.25635	SLV5-NL	NonStatic	Min	-422.959	-188.027	-2.258E-14	0.
9	0.5127	SLV5-NL	NonStatic	Min	-424.69	-193.828	-2.329E-14	0.
9	0.	SLV6-NL	NonStatic	Max	-402.656	-183.918	-2.208E-14	0.
9	0.25635	SLV6-NL	NonStatic	Max	-403.47	-189.917	-2.281E-14	0.
9	0.5127	SLV6-NL	NonStatic	Max	-404.284	-195.916	-2.355E-14	0.
9	0.	SLV6-NL	NonStatic	Min	-402.656	-183.918	-2.208E-14	0.
9	0.25635	SLV6-NL	NonStatic	Min	-403.47	-189.917	-2.281E-14	0.
9	0.5127	SLV6-NL	NonStatic	Min	-404.284	-195.916	-2.355E-14	0.
9	0.	SLV7-NL	NonStatic	Max	-415.993	-182.418	-2.190E-14	0.
9	0.25635	SLV7-NL	NonStatic	Max	-417.61	-187.692	-2.254E-14	0.
9	0.5127	SLV7-NL	NonStatic	Max	-419.227	-192.965	-2.319E-14	0.
9	0.	SLV7-NL	NonStatic	Min	-415.993	-182.418	-2.190E-14	0.
9	0.25635	SLV7-NL	NonStatic	Min	-417.61	-187.692	-2.254E-14	0.
9	0.5127	SLV7-NL	NonStatic	Min	-419.227	-192.965	-2.319E-14	0.
9	0.	SLV8-NL	NonStatic	Max	-397.435	-184.158	-2.211E-14	0.
9	0.25635	SLV8-NL	NonStatic	Max	-398.135	-189.63	-2.278E-14	0.
9	0.5127	SLV8-NL	NonStatic	Max	-398.835	-195.101	-2.345E-14	0.
9	0.	SLV8-NL	NonStatic	Min	-397.435	-184.158	-2.211E-14	0.
9	0.25635	SLV8-NL	NonStatic	Min	-398.135	-189.63	-2.278E-14	0.
9	0.5127	SLV8-NL	NonStatic	Min	-398.835	-195.101	-2.345E-14	0.
9	0.	SLV9-NL	NonStatic	Max	-449.181	-176.122	-2.114E-14	0.
9	0.25635	SLV9-NL	NonStatic	Max	-450.853	-181.577	-2.181E-14	0.
9	0.5127	SLV9-NL	NonStatic	Max	-452.525	-187.033	-2.248E-14	0.
9	0.	SLV9-NL	NonStatic	Min	-449.181	-176.122	-2.114E-14	0.
9	0.25635	SLV9-NL	NonStatic	Min	-450.853	-181.577	-2.181E-14	0.
9	0.5127	SLV9-NL	NonStatic	Min	-452.525	-187.033	-2.248E-14	0.
9	0.	SLV10-NL	NonStatic	Max	-370.862	-183.024	-2.197E-14	0.
9	0.25635	SLV10-NL	NonStatic	Max	-371.587	-188.684	-2.266E-14	0.
9	0.5127	SLV10-NL	NonStatic	Max	-372.312	-194.343	-2.336E-14	0.
9	0.	SLV10-NL	NonStatic	Min	-370.862	-183.024	-2.197E-14	0.
9	0.25635	SLV10-NL	NonStatic	Min	-371.587	-188.684	-2.266E-14	0.
9	0.5127	SLV10-NL	NonStatic	Min	-372.312	-194.343	-2.336E-14	0.
9	0.	SLV11-NL	NonStatic	Max	-452.707	-182.453	-2.190E-14	0.
9	0.25635	SLV11-NL	NonStatic	Max	-454.413	-188.066	-2.259E-14	0.
9	0.5127	SLV11-NL	NonStatic	Max	-456.119	-193.68	-2.328E-14	0.
9	0.	SLV11-NL	NonStatic	Min	-452.707	-182.453	-2.190E-14	0.
9	0.25635	SLV11-NL	NonStatic	Min	-454.413	-188.066	-2.259E-14	0.
9	0.5127	SLV11-NL	NonStatic	Min	-456.119	-193.68	-2.328E-14	0.
9	0.	SLV12-NL	NonStatic	Max	-374.407	-189.412	-2.274E-14	0.
9	0.25635	SLV12-NL	NonStatic	Max	-375.166	-195.23	-2.345E-14	0.

Table: Element Forces - Frames, Part 1 of 2

Frame	Station	OutputCase	CaseType	StepType	P	V2	V3	T
	m				KN	KN	KN	KN-m
9	0.5127	SLV12-NL	NonStatic	Max	-375.925	-201.047	-2.416E-14	0.
9	0.	SLV12-NL	NonStatic	Min	-374.407	-189.412	-2.274E-14	0.
9	0.25635	SLV12-NL	NonStatic	Min	-375.166	-195.23	-2.345E-14	0.
9	0.5127	SLV12-NL	NonStatic	Min	-375.925	-201.047	-2.416E-14	0.
9	0.	SLV13-NL	NonStatic	Max	-403.175	-173.766	-2.086E-14	0.
9	0.25635	SLV13-NL	NonStatic	Max	-404.476	-179.108	-2.151E-14	0.
9	0.5127	SLV13-NL	NonStatic	Max	-405.777	-184.45	-2.217E-14	0.
9	0.	SLV13-NL	NonStatic	Min	-403.175	-173.766	-2.086E-14	0.
9	0.25635	SLV13-NL	NonStatic	Min	-404.476	-179.108	-2.151E-14	0.
9	0.5127	SLV13-NL	NonStatic	Min	-405.777	-184.45	-2.217E-14	0.
9	0.	SLV14-NL	NonStatic	Max	-380.362	-176.269	-2.116E-14	0.
9	0.25635	SLV14-NL	NonStatic	Max	-381.378	-181.672	-2.182E-14	0.
9	0.5127	SLV14-NL	NonStatic	Max	-382.395	-187.076	-2.248E-14	0.
9	0.	SLV14-NL	NonStatic	Min	-380.362	-176.269	-2.116E-14	0.
9	0.25635	SLV14-NL	NonStatic	Min	-381.378	-181.672	-2.182E-14	0.
9	0.5127	SLV14-NL	NonStatic	Min	-382.395	-187.076	-2.248E-14	0.
9	0.	SLV15-NL	NonStatic	Max	-415.947	-194.661	-2.337E-14	0.
9	0.25635	SLV15-NL	NonStatic	Max	-417.362	-200.53	-2.409E-14	0.
9	0.5127	SLV15-NL	NonStatic	Max	-418.776	-206.4	-2.480E-14	0.
9	0.	SLV15-NL	NonStatic	Min	-415.947	-194.661	-2.337E-14	0.
9	0.25635	SLV15-NL	NonStatic	Min	-417.362	-200.53	-2.409E-14	0.
9	0.5127	SLV15-NL	NonStatic	Min	-418.776	-206.4	-2.480E-14	0.
9	0.	SLV16-NL	NonStatic	Max	-393.404	-197.266	-2.368E-14	0.
9	0.25635	SLV16-NL	NonStatic	Max	-394.535	-203.197	-2.441E-14	0.
9	0.5127	SLV16-NL	NonStatic	Max	-395.665	-209.128	-2.513E-14	0.
9	0.	SLV16-NL	NonStatic	Min	-393.404	-197.266	-2.368E-14	0.
9	0.25635	SLV16-NL	NonStatic	Min	-394.535	-203.197	-2.441E-14	0.
9	0.5127	SLV16-NL	NonStatic	Min	-395.665	-209.128	-2.513E-14	0.
10	0.	SLU 1-NL	NonStatic	Max	-557.113	-195.617	-2.348E-14	0.
10	0.25635	SLU 1-NL	NonStatic	Max	-558.245	-203.027	-2.438E-14	0.
10	0.5127	SLU 1-NL	NonStatic	Max	-559.378	-210.436	-2.529E-14	0.
10	0.	SLU 1-NL	NonStatic	Min	-557.113	-195.617	-2.348E-14	0.
10	0.25635	SLU 1-NL	NonStatic	Min	-558.245	-203.027	-2.438E-14	0.
10	0.5127	SLU 1-NL	NonStatic	Min	-559.378	-210.436	-2.529E-14	0.
10	0.	SLU 2-NL	NonStatic	Max	-440.697	-212.811	-2.554E-14	0.
10	0.25635	SLU 2-NL	NonStatic	Max	-441.83	-220.221	-2.645E-14	0.
10	0.5127	SLU 2-NL	NonStatic	Max	-442.963	-227.631	-2.736E-14	0.
10	0.	SLU 2-NL	NonStatic	Min	-440.697	-212.811	-2.554E-14	0.
10	0.25635	SLU 2-NL	NonStatic	Min	-441.83	-220.221	-2.645E-14	0.
10	0.5127	SLU 2-NL	NonStatic	Min	-442.963	-227.631	-2.736E-14	0.
10	0.	SLU 3-NL	NonStatic	Max	-498.68	-110.576	-1.327E-14	0.
10	0.25635	SLU 3-NL	NonStatic	Max	-499.551	-116.276	-1.397E-14	0.
10	0.5127	SLU 3-NL	NonStatic	Max	-500.422	-121.976	-1.466E-14	0.
10	0.	SLU 3-NL	NonStatic	Min	-498.68	-110.576	-1.327E-14	0.
10	0.25635	SLU 3-NL	NonStatic	Min	-499.551	-116.276	-1.397E-14	0.
10	0.5127	SLU 3-NL	NonStatic	Min	-500.422	-121.976	-1.466E-14	0.
10	0.	SLU 4-NL	NonStatic	Max	-550.456	-206.53	-2.479E-14	0.
10	0.25635	SLU 4-NL	NonStatic	Max	-551.589	-213.939	-2.570E-14	0.
10	0.5127	SLU 4-NL	NonStatic	Max	-552.722	-221.349	-2.660E-14	0.
10	0.	SLU 4-NL	NonStatic	Min	-550.456	-206.53	-2.479E-14	0.
10	0.25635	SLU 4-NL	NonStatic	Min	-551.589	-213.939	-2.570E-14	0.
10	0.5127	SLU 4-NL	NonStatic	Min	-552.722	-221.349	-2.660E-14	0.
10	0.	SLU 5-NL	NonStatic	Max	-500.917	-120.956	-1.451E-14	0.
10	0.25635	SLU 5-NL	NonStatic	Max	-501.788	-126.656	-1.521E-14	0.

Table: Element Forces - Frames, Part 1 of 2

Frame	Station	OutputCase	CaseType	StepType	P	V2	V3	T
	m				KN	KN	KN	KN-m
10	0.5127	SLU 5-NL	NonStatic	Max	-502.659	-132.356	-1.591E-14	0.
10	0.	SLU 5-NL	NonStatic	Min	-500.917	-120.956	-1.451E-14	0.
10	0.25635	SLU 5-NL	NonStatic	Min	-501.788	-126.656	-1.521E-14	0.
10	0.5127	SLU 5-NL	NonStatic	Min	-502.659	-132.356	-1.591E-14	0.
10	0.	SLU 6-NL	NonStatic	Max	-546.873	-187.217	-2.247E-14	0.
10	0.25635	SLU 6-NL	NonStatic	Max	-548.006	-194.627	-2.338E-14	0.
10	0.5127	SLU 6-NL	NonStatic	Max	-549.139	-202.037	-2.428E-14	0.
10	0.	SLU 6-NL	NonStatic	Min	-546.873	-187.217	-2.247E-14	0.
10	0.25635	SLU 6-NL	NonStatic	Min	-548.006	-194.627	-2.338E-14	0.
10	0.5127	SLU 6-NL	NonStatic	Min	-549.139	-202.037	-2.428E-14	0.
10	0.	SLU 7-NL	NonStatic	Max	-497.037	-100.135	-1.201E-14	0.
10	0.25635	SLU 7-NL	NonStatic	Max	-497.908	-105.835	-1.271E-14	0.
10	0.5127	SLU 7-NL	NonStatic	Max	-498.78	-111.535	-1.341E-14	0.
10	0.	SLU 7-NL	NonStatic	Min	-497.037	-100.135	-1.201E-14	0.
10	0.25635	SLU 7-NL	NonStatic	Min	-497.908	-105.835	-1.271E-14	0.
10	0.5127	SLU 7-NL	NonStatic	Min	-498.78	-111.535	-1.341E-14	0.
10	0.	SLE-C-NL	NonStatic	Max	-422.43	-147.439	-1.770E-14	0.
10	0.25635	SLE-C-NL	NonStatic	Max	-423.302	-153.139	-1.839E-14	0.
10	0.5127	SLE-C-NL	NonStatic	Max	-424.173	-158.839	-1.909E-14	0.
10	0.	SLE-C-NL	NonStatic	Min	-422.43	-147.439	-1.770E-14	0.
10	0.25635	SLE-C-NL	NonStatic	Min	-423.302	-153.139	-1.839E-14	0.
10	0.5127	SLE-C-NL	NonStatic	Min	-424.173	-158.839	-1.909E-14	0.
10	0.	SLE-F-1-NL	NonStatic	Max	-391.279	-146.913	-1.763E-14	0.
10	0.25635	SLE-F-1-NL	NonStatic	Max	-392.15	-152.613	-1.833E-14	0.
10	0.5127	SLE-F-1-NL	NonStatic	Max	-393.022	-158.313	-1.903E-14	0.
10	0.	SLE-F-1-NL	NonStatic	Min	-391.279	-146.913	-1.763E-14	0.
10	0.25635	SLE-F-1-NL	NonStatic	Min	-392.15	-152.613	-1.833E-14	0.
10	0.5127	SLE-F-1-NL	NonStatic	Min	-393.022	-158.313	-1.903E-14	0.
10	0.	SLE-F-2-NL	NonStatic	Max	-401.644	-128.008	-1.536E-14	0.
10	0.25635	SLE-F-2-NL	NonStatic	Max	-402.516	-133.708	-1.606E-14	0.
10	0.5127	SLE-F-2-NL	NonStatic	Max	-403.387	-139.408	-1.676E-14	0.
10	0.	SLE-F-2-NL	NonStatic	Min	-401.644	-128.008	-1.536E-14	0.
10	0.25635	SLE-F-2-NL	NonStatic	Min	-402.516	-133.708	-1.606E-14	0.
10	0.5127	SLE-F-2-NL	NonStatic	Min	-403.387	-139.408	-1.676E-14	0.
10	0.	SLE-F-3-NL	NonStatic	Max	-400.577	-121.982	-1.464E-14	0.
10	0.25635	SLE-F-3-NL	NonStatic	Max	-401.448	-127.682	-1.534E-14	0.
10	0.5127	SLE-F-3-NL	NonStatic	Max	-402.32	-133.382	-1.603E-14	0.
10	0.	SLE-F-3-NL	NonStatic	Min	-400.577	-121.982	-1.464E-14	0.
10	0.25635	SLE-F-3-NL	NonStatic	Min	-401.448	-127.682	-1.534E-14	0.
10	0.5127	SLE-F-3-NL	NonStatic	Min	-402.32	-133.382	-1.603E-14	0.
10	0.	SLE-QP-NL	NonStatic	Max	-382.279	-127.769	-1.533E-14	0.
10	0.25635	SLE-QP-NL	NonStatic	Max	-383.15	-133.469	-1.603E-14	0.
10	0.5127	SLE-QP-NL	NonStatic	Max	-384.022	-139.169	-1.673E-14	0.
10	0.	SLE-QP-NL	NonStatic	Min	-382.279	-127.769	-1.533E-14	0.
10	0.25635	SLE-QP-NL	NonStatic	Min	-383.15	-133.469	-1.603E-14	0.
10	0.5127	SLE-QP-NL	NonStatic	Min	-384.022	-139.169	-1.673E-14	0.
10	0.	SLV1-NL	NonStatic	Max	-479.679	-126.68	-1.520E-14	0.
10	0.25635	SLV1-NL	NonStatic	Max	-481.822	-132.267	-1.589E-14	0.
10	0.5127	SLV1-NL	NonStatic	Max	-483.965	-137.855	-1.657E-14	0.
10	0.	SLV1-NL	NonStatic	Min	-479.679	-126.68	-1.520E-14	0.
10	0.25635	SLV1-NL	NonStatic	Min	-481.822	-132.267	-1.589E-14	0.
10	0.5127	SLV1-NL	NonStatic	Min	-483.965	-137.855	-1.657E-14	0.
10	0.	SLV2-NL	NonStatic	Max	-411.03	-120.944	-1.451E-14	0.
10	0.25635	SLV2-NL	NonStatic	Max	-410.654	-126.916	-1.524E-14	0.

Table: Element Forces - Frames, Part 1 of 2

Frame	Station	OutputCase	CaseType	StepType	P	V2	V3	T
	m				KN	KN	KN	KN-m
10	0.5127	SLV2-NL	NonStatic	Max	-410.279	-132.889	-1.597E-14	0.
10	0.	SLV2-NL	NonStatic	Min	-411.03	-120.944	-1.451E-14	0.
10	0.25635	SLV2-NL	NonStatic	Min	-410.654	-126.916	-1.524E-14	0.
10	0.5127	SLV2-NL	NonStatic	Min	-410.279	-132.889	-1.597E-14	0.
10	0.	SLV3-NL	NonStatic	Max	-478.046	-126.764	-1.521E-14	0.
10	0.25635	SLV3-NL	NonStatic	Max	-480.165	-132.192	-1.588E-14	0.
10	0.5127	SLV3-NL	NonStatic	Max	-482.283	-137.619	-1.654E-14	0.
10	0.	SLV3-NL	NonStatic	Min	-478.046	-126.764	-1.521E-14	0.
10	0.25635	SLV3-NL	NonStatic	Min	-480.165	-132.192	-1.588E-14	0.
10	0.5127	SLV3-NL	NonStatic	Min	-482.283	-137.619	-1.654E-14	0.
10	0.	SLV4-NL	NonStatic	Max	-409.4	-121.048	-1.452E-14	0.
10	0.25635	SLV4-NL	NonStatic	Max	-409.	-126.86	-1.524E-14	0.
10	0.5127	SLV4-NL	NonStatic	Max	-408.6	-132.672	-1.595E-14	0.
10	0.	SLV4-NL	NonStatic	Min	-409.4	-121.048	-1.452E-14	0.
10	0.25635	SLV4-NL	NonStatic	Min	-409.	-126.86	-1.524E-14	0.
10	0.5127	SLV4-NL	NonStatic	Min	-408.6	-132.672	-1.595E-14	0.
10	0.	SLV5-NL	NonStatic	Max	-414.829	-130.323	-1.564E-14	0.
10	0.25635	SLV5-NL	NonStatic	Max	-416.119	-136.232	-1.636E-14	0.
10	0.5127	SLV5-NL	NonStatic	Max	-417.409	-142.14	-1.709E-14	0.
10	0.	SLV5-NL	NonStatic	Min	-414.829	-130.323	-1.564E-14	0.
10	0.25635	SLV5-NL	NonStatic	Min	-416.119	-136.232	-1.636E-14	0.
10	0.5127	SLV5-NL	NonStatic	Min	-417.409	-142.14	-1.709E-14	0.
10	0.	SLV6-NL	NonStatic	Max	-394.385	-129.442	-1.553E-14	0.
10	0.25635	SLV6-NL	NonStatic	Max	-394.92	-135.466	-1.627E-14	0.
10	0.5127	SLV6-NL	NonStatic	Max	-395.454	-141.491	-1.701E-14	0.
10	0.	SLV6-NL	NonStatic	Min	-394.385	-129.442	-1.553E-14	0.
10	0.25635	SLV6-NL	NonStatic	Min	-394.92	-135.466	-1.627E-14	0.
10	0.5127	SLV6-NL	NonStatic	Min	-395.454	-141.491	-1.701E-14	0.
10	0.	SLV7-NL	NonStatic	Max	-409.384	-130.606	-1.567E-14	0.
10	0.25635	SLV7-NL	NonStatic	Max	-410.593	-135.981	-1.633E-14	0.
10	0.5127	SLV7-NL	NonStatic	Max	-411.801	-141.357	-1.699E-14	0.
10	0.	SLV7-NL	NonStatic	Min	-409.384	-130.606	-1.567E-14	0.
10	0.25635	SLV7-NL	NonStatic	Min	-410.593	-135.981	-1.633E-14	0.
10	0.5127	SLV7-NL	NonStatic	Min	-411.801	-141.357	-1.699E-14	0.
10	0.	SLV8-NL	NonStatic	Max	-388.951	-129.787	-1.558E-14	0.
10	0.25635	SLV8-NL	NonStatic	Max	-389.404	-135.278	-1.625E-14	0.
10	0.5127	SLV8-NL	NonStatic	Max	-389.857	-140.769	-1.692E-14	0.
10	0.	SLV8-NL	NonStatic	Min	-388.951	-129.787	-1.558E-14	0.
10	0.25635	SLV8-NL	NonStatic	Min	-389.404	-135.278	-1.625E-14	0.
10	0.5127	SLV8-NL	NonStatic	Min	-389.857	-140.769	-1.692E-14	0.
10	0.	SLV9-NL	NonStatic	Max	-442.96	-127.543	-1.531E-14	0.
10	0.25635	SLV9-NL	NonStatic	Max	-444.011	-133.133	-1.599E-14	0.
10	0.5127	SLV9-NL	NonStatic	Max	-445.063	-138.724	-1.668E-14	0.
10	0.	SLV9-NL	NonStatic	Min	-442.96	-127.543	-1.531E-14	0.
10	0.25635	SLV9-NL	NonStatic	Min	-444.011	-133.133	-1.599E-14	0.
10	0.5127	SLV9-NL	NonStatic	Min	-445.063	-138.724	-1.668E-14	0.
10	0.	SLV10-NL	NonStatic	Max	-362.515	-127.508	-1.530E-14	0.
10	0.25635	SLV10-NL	NonStatic	Max	-363.182	-133.157	-1.599E-14	0.
10	0.5127	SLV10-NL	NonStatic	Max	-363.849	-138.806	-1.668E-14	0.
10	0.	SLV10-NL	NonStatic	Min	-362.515	-127.508	-1.530E-14	0.
10	0.25635	SLV10-NL	NonStatic	Min	-363.182	-133.157	-1.599E-14	0.
10	0.5127	SLV10-NL	NonStatic	Min	-363.849	-138.806	-1.668E-14	0.
10	0.	SLV11-NL	NonStatic	Max	-446.216	-132.02	-1.584E-14	0.
10	0.25635	SLV11-NL	NonStatic	Max	-447.292	-137.771	-1.655E-14	0.

Table: Element Forces - Frames, Part 1 of 2

Frame	Station	OutputCase	CaseType	StepType	P	V2	V3	T
	m				KN	KN	KN	KN-m
10	0.5127	SLV11-NL	NonStatic	Max	-448.367	-143.521	-1.725E-14	0.
10	0.	SLV11-NL	NonStatic	Min	-446.216	-132.02	-1.584E-14	0.
10	0.25635	SLV11-NL	NonStatic	Min	-447.292	-137.771	-1.655E-14	0.
10	0.5127	SLV11-NL	NonStatic	Min	-448.367	-143.521	-1.725E-14	0.
10	0.	SLV12-NL	NonStatic	Max	-365.786	-132.064	-1.585E-14	0.
10	0.25635	SLV12-NL	NonStatic	Max	-366.478	-137.873	-1.656E-14	0.
10	0.5127	SLV12-NL	NonStatic	Max	-367.169	-143.683	-1.727E-14	0.
10	0.	SLV12-NL	NonStatic	Min	-365.786	-132.064	-1.585E-14	0.
10	0.25635	SLV12-NL	NonStatic	Min	-366.478	-137.873	-1.656E-14	0.
10	0.5127	SLV12-NL	NonStatic	Min	-367.169	-143.683	-1.727E-14	0.
10	0.	SLV13-NL	NonStatic	Max	-396.398	-123.924	-1.487E-14	0.
10	0.25635	SLV13-NL	NonStatic	Max	-397.286	-129.348	-1.554E-14	0.
10	0.5127	SLV13-NL	NonStatic	Max	-398.174	-134.772	-1.620E-14	0.
10	0.	SLV13-NL	NonStatic	Min	-396.398	-123.924	-1.487E-14	0.
10	0.25635	SLV13-NL	NonStatic	Min	-397.286	-129.348	-1.554E-14	0.
10	0.5127	SLV13-NL	NonStatic	Min	-398.174	-134.772	-1.620E-14	0.
10	0.	SLV14-NL	NonStatic	Max	-372.913	-124.57	-1.495E-14	0.
10	0.25635	SLV14-NL	NonStatic	Max	-373.686	-130.012	-1.562E-14	0.
10	0.5127	SLV14-NL	NonStatic	Max	-374.459	-135.454	-1.628E-14	0.
10	0.	SLV14-NL	NonStatic	Min	-372.913	-124.57	-1.495E-14	0.
10	0.25635	SLV14-NL	NonStatic	Min	-373.686	-130.012	-1.562E-14	0.
10	0.5127	SLV14-NL	NonStatic	Min	-374.459	-135.454	-1.628E-14	0.
10	0.	SLV15-NL	NonStatic	Max	-408.279	-138.714	-1.665E-14	0.
10	0.25635	SLV15-NL	NonStatic	Max	-409.248	-144.672	-1.738E-14	0.
10	0.5127	SLV15-NL	NonStatic	Max	-410.218	-150.63	-1.811E-14	0.
10	0.	SLV15-NL	NonStatic	Min	-408.279	-138.714	-1.665E-14	0.
10	0.25635	SLV15-NL	NonStatic	Min	-409.248	-144.672	-1.738E-14	0.
10	0.5127	SLV15-NL	NonStatic	Min	-410.218	-150.63	-1.811E-14	0.
10	0.	SLV16-NL	NonStatic	Max	-385.057	-139.518	-1.674E-14	0.
10	0.25635	SLV16-NL	NonStatic	Max	-385.911	-145.493	-1.747E-14	0.
10	0.5127	SLV16-NL	NonStatic	Max	-386.766	-151.469	-1.821E-14	0.
10	0.	SLV16-NL	NonStatic	Min	-385.057	-139.518	-1.674E-14	0.
10	0.25635	SLV16-NL	NonStatic	Min	-385.911	-145.493	-1.747E-14	0.
10	0.5127	SLV16-NL	NonStatic	Min	-386.766	-151.469	-1.821E-14	0.
11	0.	SLU 1-NL	NonStatic	Max	-549.479	-114.848	-1.378E-14	0.
11	0.25635	SLU 1-NL	NonStatic	Max	-550.16	-122.313	-1.469E-14	0.
11	0.5127	SLU 1-NL	NonStatic	Max	-550.841	-129.778	-1.560E-14	0.
11	0.	SLU 1-NL	NonStatic	Min	-549.479	-114.848	-1.378E-14	0.
11	0.25635	SLU 1-NL	NonStatic	Min	-550.16	-122.313	-1.469E-14	0.
11	0.5127	SLU 1-NL	NonStatic	Min	-550.841	-129.778	-1.560E-14	0.
11	0.	SLU 2-NL	NonStatic	Max	-432.226	-125.159	-1.501E-14	0.
11	0.25635	SLU 2-NL	NonStatic	Max	-432.907	-132.624	-1.593E-14	0.
11	0.5127	SLU 2-NL	NonStatic	Max	-433.589	-140.089	-1.684E-14	0.
11	0.	SLU 2-NL	NonStatic	Min	-432.226	-125.159	-1.501E-14	0.
11	0.25635	SLU 2-NL	NonStatic	Min	-432.907	-132.624	-1.593E-14	0.
11	0.5127	SLU 2-NL	NonStatic	Min	-433.589	-140.089	-1.684E-14	0.
11	0.	SLU 3-NL	NonStatic	Max	-494.753	-64.355	-7.716E-15	0.
11	0.25635	SLU 3-NL	NonStatic	Max	-495.277	-70.097	-8.419E-15	0.
11	0.5127	SLU 3-NL	NonStatic	Max	-495.802	-75.839	-9.122E-15	0.
11	0.	SLU 3-NL	NonStatic	Min	-494.753	-64.355	-7.716E-15	0.
11	0.25635	SLU 3-NL	NonStatic	Min	-495.277	-70.097	-8.419E-15	0.
11	0.5127	SLU 3-NL	NonStatic	Min	-495.802	-75.839	-9.122E-15	0.
11	0.	SLU 4-NL	NonStatic	Max	-542.11	-127.418	-1.529E-14	0.
11	0.25635	SLU 4-NL	NonStatic	Max	-542.791	-134.883	-1.620E-14	0.

Table: Element Forces - Frames, Part 1 of 2

Frame	Station	OutputCase	CaseType	StepType	P	V2	V3	T
	m				KN	KN	KN	KN-m
11	0.5127	SLU 4-NL	NonStatic	Max	-543.473	-142.347	-1.711E-14	0.
11	0.	SLU 4-NL	NonStatic	Min	-542.11	-127.418	-1.529E-14	0.
11	0.25635	SLU 4-NL	NonStatic	Min	-542.791	-134.883	-1.620E-14	0.
11	0.5127	SLU 4-NL	NonStatic	Min	-543.473	-142.347	-1.711E-14	0.
11	0.	SLU 5-NL	NonStatic	Max	-496.286	-77.052	-9.241E-15	0.
11	0.25635	SLU 5-NL	NonStatic	Max	-496.81	-82.794	-9.944E-15	0.
11	0.5127	SLU 5-NL	NonStatic	Max	-497.334	-88.537	-1.065E-14	0.
11	0.	SLU 5-NL	NonStatic	Min	-496.286	-77.052	-9.241E-15	0.
11	0.25635	SLU 5-NL	NonStatic	Min	-496.81	-82.794	-9.944E-15	0.
11	0.5127	SLU 5-NL	NonStatic	Min	-497.334	-88.537	-1.065E-14	0.
11	0.	SLU 6-NL	NonStatic	Max	-539.828	-103.787	-1.245E-14	0.
11	0.25635	SLU 6-NL	NonStatic	Max	-540.51	-111.252	-1.336E-14	0.
11	0.5127	SLU 6-NL	NonStatic	Max	-541.191	-118.717	-1.428E-14	0.
11	0.	SLU 6-NL	NonStatic	Min	-539.828	-103.787	-1.245E-14	0.
11	0.25635	SLU 6-NL	NonStatic	Min	-540.51	-111.252	-1.336E-14	0.
11	0.5127	SLU 6-NL	NonStatic	Min	-541.191	-118.717	-1.428E-14	0.
11	0.	SLU 7-NL	NonStatic	Max	-493.818	-51.622	-6.186E-15	0.
11	0.25635	SLU 7-NL	NonStatic	Max	-494.342	-57.364	-6.890E-15	0.
11	0.5127	SLU 7-NL	NonStatic	Max	-494.866	-63.107	-7.593E-15	0.
11	0.	SLU 7-NL	NonStatic	Min	-493.818	-51.622	-6.186E-15	0.
11	0.25635	SLU 7-NL	NonStatic	Min	-494.342	-57.364	-6.890E-15	0.
11	0.5127	SLU 7-NL	NonStatic	Min	-494.866	-63.107	-7.593E-15	0.
11	0.	SLE-C-NL	NonStatic	Max	-416.708	-86.516	-1.038E-14	0.
11	0.25635	SLE-C-NL	NonStatic	Max	-417.232	-92.258	-1.108E-14	0.
11	0.5127	SLE-C-NL	NonStatic	Max	-417.757	-98.	-1.178E-14	0.
11	0.	SLE-C-NL	NonStatic	Min	-416.708	-86.516	-1.038E-14	0.
11	0.25635	SLE-C-NL	NonStatic	Min	-417.232	-92.258	-1.108E-14	0.
11	0.5127	SLE-C-NL	NonStatic	Min	-417.757	-98.	-1.178E-14	0.
11	0.	SLE-F-1-NL	NonStatic	Max	-385.583	-86.189	-1.034E-14	0.
11	0.25635	SLE-F-1-NL	NonStatic	Max	-386.107	-91.931	-1.104E-14	0.
11	0.5127	SLE-F-1-NL	NonStatic	Max	-386.631	-97.674	-1.174E-14	0.
11	0.	SLE-F-1-NL	NonStatic	Min	-385.583	-86.189	-1.034E-14	0.
11	0.25635	SLE-F-1-NL	NonStatic	Min	-386.107	-91.931	-1.104E-14	0.
11	0.5127	SLE-F-1-NL	NonStatic	Min	-386.631	-97.674	-1.174E-14	0.
11	0.	SLE-F-2-NL	NonStatic	Max	-396.82	-76.573	-9.183E-15	0.
11	0.25635	SLE-F-2-NL	NonStatic	Max	-397.344	-82.315	-9.887E-15	0.
11	0.5127	SLE-F-2-NL	NonStatic	Max	-397.869	-88.057	-1.059E-14	0.
11	0.	SLE-F-2-NL	NonStatic	Min	-396.82	-76.573	-9.183E-15	0.
11	0.25635	SLE-F-2-NL	NonStatic	Min	-397.344	-82.315	-9.887E-15	0.
11	0.5127	SLE-F-2-NL	NonStatic	Min	-397.869	-88.057	-1.059E-14	0.
11	0.	SLE-F-3-NL	NonStatic	Max	-396.146	-69.431	-8.326E-15	0.
11	0.25635	SLE-F-3-NL	NonStatic	Max	-396.67	-75.173	-9.029E-15	0.
11	0.5127	SLE-F-3-NL	NonStatic	Max	-397.194	-80.915	-9.732E-15	0.
11	0.	SLE-F-3-NL	NonStatic	Min	-396.146	-69.431	-8.326E-15	0.
11	0.25635	SLE-F-3-NL	NonStatic	Min	-396.67	-75.173	-9.029E-15	0.
11	0.5127	SLE-F-3-NL	NonStatic	Min	-397.194	-80.915	-9.732E-15	0.
11	0.	SLE-QP-NL	NonStatic	Max	-377.516	-74.665	-8.954E-15	0.
11	0.25635	SLE-QP-NL	NonStatic	Max	-378.04	-80.407	-9.657E-15	0.
11	0.5127	SLE-QP-NL	NonStatic	Max	-378.565	-86.149	-1.036E-14	0.
11	0.	SLE-QP-NL	NonStatic	Min	-377.516	-74.665	-8.954E-15	0.
11	0.25635	SLE-QP-NL	NonStatic	Min	-378.04	-80.407	-9.657E-15	0.
11	0.5127	SLE-QP-NL	NonStatic	Min	-378.565	-86.149	-1.036E-14	0.
11	0.	SLV1-NL	NonStatic	Max	-477.361	-79.193	-9.498E-15	0.
11	0.25635	SLV1-NL	NonStatic	Max	-478.87	-84.926	-1.020E-14	0.

Table: Element Forces - Frames, Part 1 of 2

Frame	Station	OutputCase	CaseType	StepType	P	V2	V3	T
	m				KN	KN	KN	KN-m
11	0.5127	SLV1-NL	NonStatic	Max	-480.379	-90.66	-1.090E-14	0.
11	0.	SLV1-NL	NonStatic	Min	-477.361	-79.193	-9.498E-15	0.
11	0.25635	SLV1-NL	NonStatic	Min	-478.87	-84.926	-1.020E-14	0.
11	0.5127	SLV1-NL	NonStatic	Min	-480.379	-90.66	-1.090E-14	0.
11	0.	SLV2-NL	NonStatic	Max	-404.242	-65.519	-7.855E-15	0.
11	0.25635	SLV2-NL	NonStatic	Max	-403.796	-71.431	-8.579E-15	0.
11	0.5127	SLV2-NL	NonStatic	Max	-403.351	-77.343	-9.303E-15	0.
11	0.	SLV2-NL	NonStatic	Min	-404.242	-65.519	-7.855E-15	0.
11	0.25635	SLV2-NL	NonStatic	Min	-403.796	-71.431	-8.579E-15	0.
11	0.5127	SLV2-NL	NonStatic	Min	-403.351	-77.343	-9.303E-15	0.
11	0.	SLV3-NL	NonStatic	Max	-475.683	-79.304	-9.512E-15	0.
11	0.25635	SLV3-NL	NonStatic	Max	-477.177	-84.876	-1.019E-14	0.
11	0.5127	SLV3-NL	NonStatic	Max	-478.671	-90.449	-1.088E-14	0.
11	0.	SLV3-NL	NonStatic	Min	-475.683	-79.304	-9.512E-15	0.
11	0.25635	SLV3-NL	NonStatic	Min	-477.177	-84.876	-1.019E-14	0.
11	0.5127	SLV3-NL	NonStatic	Min	-478.671	-90.449	-1.088E-14	0.
11	0.	SLV4-NL	NonStatic	Max	-402.566	-65.652	-7.872E-15	0.
11	0.25635	SLV4-NL	NonStatic	Max	-402.106	-71.403	-8.576E-15	0.
11	0.5127	SLV4-NL	NonStatic	Max	-401.645	-77.154	-9.280E-15	0.
11	0.	SLV4-NL	NonStatic	Min	-402.566	-65.652	-7.872E-15	0.
11	0.25635	SLV4-NL	NonStatic	Min	-402.106	-71.403	-8.576E-15	0.
11	0.5127	SLV4-NL	NonStatic	Min	-401.645	-77.154	-9.280E-15	0.
11	0.	SLV5-NL	NonStatic	Max	-410.729	-77.414	-9.284E-15	0.
11	0.25635	SLV5-NL	NonStatic	Max	-411.571	-83.398	-1.002E-14	0.
11	0.5127	SLV5-NL	NonStatic	Max	-412.413	-89.383	-1.075E-14	0.
11	0.	SLV5-NL	NonStatic	Min	-410.729	-77.414	-9.284E-15	0.
11	0.25635	SLV5-NL	NonStatic	Min	-411.571	-83.398	-1.002E-14	0.
11	0.5127	SLV5-NL	NonStatic	Min	-412.413	-89.383	-1.075E-14	0.
11	0.	SLV6-NL	NonStatic	Max	-388.888	-74.303	-8.910E-15	0.
11	0.25635	SLV6-NL	NonStatic	Max	-389.144	-80.341	-9.649E-15	0.
11	0.5127	SLV6-NL	NonStatic	Max	-389.399	-86.379	-1.039E-14	0.
11	0.	SLV6-NL	NonStatic	Min	-388.888	-74.303	-8.910E-15	0.
11	0.25635	SLV6-NL	NonStatic	Min	-389.144	-80.341	-9.649E-15	0.
11	0.5127	SLV6-NL	NonStatic	Min	-389.399	-86.379	-1.039E-14	0.
11	0.	SLV7-NL	NonStatic	Max	-405.134	-77.786	-9.330E-15	0.
11	0.25635	SLV7-NL	NonStatic	Max	-405.927	-83.232	-9.997E-15	0.
11	0.5127	SLV7-NL	NonStatic	Max	-406.72	-88.679	-1.066E-14	0.
11	0.	SLV7-NL	NonStatic	Min	-405.134	-77.786	-9.330E-15	0.
11	0.25635	SLV7-NL	NonStatic	Min	-405.927	-83.232	-9.997E-15	0.
11	0.5127	SLV7-NL	NonStatic	Min	-406.72	-88.679	-1.066E-14	0.
11	0.	SLV8-NL	NonStatic	Max	-383.3	-74.746	-8.965E-15	0.
11	0.25635	SLV8-NL	NonStatic	Max	-383.506	-80.247	-9.638E-15	0.
11	0.5127	SLV8-NL	NonStatic	Max	-383.713	-85.747	-1.031E-14	0.
11	0.	SLV8-NL	NonStatic	Min	-383.3	-74.746	-8.965E-15	0.
11	0.25635	SLV8-NL	NonStatic	Min	-383.506	-80.247	-9.638E-15	0.
11	0.5127	SLV8-NL	NonStatic	Min	-383.713	-85.747	-1.031E-14	0.
11	0.	SLV9-NL	NonStatic	Max	-438.479	-77.849	-9.337E-15	0.
11	0.25635	SLV9-NL	NonStatic	Max	-438.898	-83.52	-1.003E-14	0.
11	0.5127	SLV9-NL	NonStatic	Max	-439.317	-89.19	-1.073E-14	0.
11	0.	SLV9-NL	NonStatic	Min	-438.479	-77.849	-9.337E-15	0.
11	0.25635	SLV9-NL	NonStatic	Min	-438.898	-83.52	-1.003E-14	0.
11	0.5127	SLV9-NL	NonStatic	Min	-439.317	-89.19	-1.073E-14	0.
11	0.	SLV10-NL	NonStatic	Max	-357.448	-71.434	-8.566E-15	0.
11	0.25635	SLV10-NL	NonStatic	Max	-358.063	-77.087	-9.259E-15	0.

Table: Element Forces - Frames, Part 1 of 2

Frame	Station	OutputCase	CaseType	StepType	P	V2	V3	T
	m				KN	KN	KN	KN-m
11	0.5127	SLV10-NL	NonStatic	Max	-358.677	-82.74	-9.951E-15	0.
11	0.	SLV10-NL	NonStatic	Min	-357.448	-71.434	-8.566E-15	0.
11	0.25635	SLV10-NL	NonStatic	Min	-358.063	-77.087	-9.259E-15	0.
11	0.5127	SLV10-NL	NonStatic	Min	-358.677	-82.74	-9.951E-15	0.
11	0.	SLV11-NL	NonStatic	Max	-441.558	-80.456	-9.650E-15	0.
11	0.25635	SLV11-NL	NonStatic	Max	-441.992	-86.288	-1.036E-14	0.
11	0.5127	SLV11-NL	NonStatic	Max	-442.426	-92.12	-1.108E-14	0.
11	0.	SLV11-NL	NonStatic	Min	-441.558	-80.456	-9.650E-15	0.
11	0.25635	SLV11-NL	NonStatic	Min	-441.992	-86.288	-1.036E-14	0.
11	0.5127	SLV11-NL	NonStatic	Min	-442.426	-92.12	-1.108E-14	0.
11	0.	SLV12-NL	NonStatic	Max	-360.537	-74.134	-8.890E-15	0.
11	0.25635	SLV12-NL	NonStatic	Max	-361.166	-79.948	-9.602E-15	0.
11	0.5127	SLV12-NL	NonStatic	Max	-361.795	-85.762	-1.031E-14	0.
11	0.	SLV12-NL	NonStatic	Min	-360.537	-74.134	-8.890E-15	0.
11	0.25635	SLV12-NL	NonStatic	Min	-361.166	-79.948	-9.602E-15	0.
11	0.5127	SLV12-NL	NonStatic	Min	-361.795	-85.762	-1.031E-14	0.
11	0.	SLV13-NL	NonStatic	Max	-391.848	-73.231	-8.783E-15	0.
11	0.25635	SLV13-NL	NonStatic	Max	-392.318	-78.707	-9.453E-15	0.
11	0.5127	SLV13-NL	NonStatic	Max	-392.789	-84.183	-1.012E-14	0.
11	0.	SLV13-NL	NonStatic	Min	-391.848	-73.231	-8.783E-15	0.
11	0.25635	SLV13-NL	NonStatic	Min	-392.318	-78.707	-9.453E-15	0.
11	0.5127	SLV13-NL	NonStatic	Min	-392.789	-84.183	-1.012E-14	0.
11	0.	SLV14-NL	NonStatic	Max	-368.142	-72.123	-8.650E-15	0.
11	0.25635	SLV14-NL	NonStatic	Max	-368.671	-77.594	-9.320E-15	0.
11	0.5127	SLV14-NL	NonStatic	Max	-369.2	-83.065	-9.990E-15	0.
11	0.	SLV14-NL	NonStatic	Min	-368.142	-72.123	-8.650E-15	0.
11	0.25635	SLV14-NL	NonStatic	Min	-368.671	-77.594	-9.320E-15	0.
11	0.5127	SLV14-NL	NonStatic	Min	-369.2	-83.065	-9.990E-15	0.
11	0.	SLV15-NL	NonStatic	Max	-403.147	-81.854	-9.817E-15	0.
11	0.25635	SLV15-NL	NonStatic	Max	-403.666	-87.868	-1.055E-14	0.
11	0.5127	SLV15-NL	NonStatic	Max	-404.186	-93.882	-1.129E-14	0.
11	0.	SLV15-NL	NonStatic	Min	-403.147	-81.854	-9.817E-15	0.
11	0.25635	SLV15-NL	NonStatic	Min	-403.666	-87.868	-1.055E-14	0.
11	0.5127	SLV15-NL	NonStatic	Min	-404.186	-93.882	-1.129E-14	0.
11	0.	SLV16-NL	NonStatic	Max	-379.693	-80.945	-9.708E-15	0.
11	0.25635	SLV16-NL	NonStatic	Max	-380.271	-86.953	-1.044E-14	0.
11	0.5127	SLV16-NL	NonStatic	Max	-380.849	-92.961	-1.118E-14	0.
11	0.	SLV16-NL	NonStatic	Min	-379.693	-80.945	-9.708E-15	0.
11	0.25635	SLV16-NL	NonStatic	Min	-380.271	-86.953	-1.044E-14	0.
11	0.5127	SLV16-NL	NonStatic	Min	-380.849	-92.961	-1.118E-14	0.
12	0.	SLU 1-NL	NonStatic	Max	-545.876	-33.361	-3.989E-15	0.
12	0.25635	SLU 1-NL	NonStatic	Max	-546.103	-40.853	-4.907E-15	0.
12	0.5127	SLU 1-NL	NonStatic	Max	-546.331	-48.346	-5.824E-15	0.
12	0.	SLU 1-NL	NonStatic	Min	-545.876	-33.361	-3.989E-15	0.
12	0.25635	SLU 1-NL	NonStatic	Min	-546.103	-40.853	-4.907E-15	0.
12	0.5127	SLU 1-NL	NonStatic	Min	-546.331	-48.346	-5.824E-15	0.
12	0.	SLU 2-NL	NonStatic	Max	-428.205	-36.797	-4.402E-15	0.
12	0.25635	SLU 2-NL	NonStatic	Max	-428.433	-44.289	-5.319E-15	0.
12	0.5127	SLU 2-NL	NonStatic	Max	-428.66	-51.782	-6.237E-15	0.
12	0.	SLU 2-NL	NonStatic	Min	-428.205	-36.797	-4.402E-15	0.
12	0.25635	SLU 2-NL	NonStatic	Min	-428.433	-44.289	-5.319E-15	0.
12	0.5127	SLU 2-NL	NonStatic	Min	-428.66	-51.782	-6.237E-15	0.
12	0.	SLU 3-NL	NonStatic	Max	-492.957	-17.657	-2.107E-15	0.
12	0.25635	SLU 3-NL	NonStatic	Max	-493.132	-23.421	-2.813E-15	0.

Table: Element Forces - Frames, Part 1 of 2

Frame	Station	OutputCase	CaseType	StepType	P	V2	V3	T
	m				KN	KN	KN	KN-m
12	0.5127	SLU 3-NL	NonStatic	Max	-493.307	-29.184	-3.519E-15	0.
12	0.	SLU 3-NL	NonStatic	Min	-492.957	-17.657	-2.107E-15	0.
12	0.25635	SLU 3-NL	NonStatic	Min	-493.132	-23.421	-2.813E-15	0.
12	0.5127	SLU 3-NL	NonStatic	Min	-493.307	-29.184	-3.519E-15	0.
12	0.	SLU 4-NL	NonStatic	Max	-537.727	-46.51	-5.569E-15	0.
12	0.25635	SLU 4-NL	NonStatic	Max	-537.955	-54.002	-6.486E-15	0.
12	0.5127	SLU 4-NL	NonStatic	Max	-538.182	-61.495	-7.404E-15	0.
12	0.	SLU 4-NL	NonStatic	Min	-537.727	-46.51	-5.569E-15	0.
12	0.25635	SLU 4-NL	NonStatic	Min	-537.955	-54.002	-6.486E-15	0.
12	0.5127	SLU 4-NL	NonStatic	Min	-538.182	-61.495	-7.404E-15	0.
12	0.	SLU 5-NL	NonStatic	Max	-493.679	-31.521	-3.773E-15	0.
12	0.25635	SLU 5-NL	NonStatic	Max	-493.854	-37.285	-4.478E-15	0.
12	0.5127	SLU 5-NL	NonStatic	Max	-494.029	-43.048	-5.184E-15	0.
12	0.	SLU 5-NL	NonStatic	Min	-493.679	-31.521	-3.773E-15	0.
12	0.25635	SLU 5-NL	NonStatic	Min	-493.854	-37.285	-4.478E-15	0.
12	0.5127	SLU 5-NL	NonStatic	Min	-494.029	-43.048	-5.184E-15	0.
12	0.	SLU 6-NL	NonStatic	Max	-536.945	-20.715	-2.470E-15	0.
12	0.25635	SLU 6-NL	NonStatic	Max	-537.172	-28.207	-3.388E-15	0.
12	0.5127	SLU 6-NL	NonStatic	Max	-537.4	-35.7	-4.305E-15	0.
12	0.	SLU 6-NL	NonStatic	Min	-536.945	-20.715	-2.470E-15	0.
12	0.25635	SLU 6-NL	NonStatic	Min	-537.172	-28.207	-3.388E-15	0.
12	0.5127	SLU 6-NL	NonStatic	Min	-537.4	-35.7	-4.305E-15	0.
12	0.	SLU 7-NL	NonStatic	Max	-492.833	-3.781	-4.403E-16	0.
12	0.25635	SLU 7-NL	NonStatic	Max	-493.008	-9.545	-1.146E-15	0.
12	0.5127	SLU 7-NL	NonStatic	Max	-493.183	-15.308	-1.852E-15	0.
12	0.	SLU 7-NL	NonStatic	Min	-492.833	-3.781	-4.403E-16	0.
12	0.25635	SLU 7-NL	NonStatic	Min	-493.008	-9.545	-1.146E-15	0.
12	0.5127	SLU 7-NL	NonStatic	Min	-493.183	-15.308	-1.852E-15	0.
12	0.	SLE-C-NL	NonStatic	Max	-414.013	-25.051	-2.995E-15	0.
12	0.25635	SLE-C-NL	NonStatic	Max	-414.187	-30.815	-3.701E-15	0.
12	0.5127	SLE-C-NL	NonStatic	Max	-414.362	-36.578	-4.407E-15	0.
12	0.	SLE-C-NL	NonStatic	Min	-414.013	-25.051	-2.995E-15	0.
12	0.25635	SLE-C-NL	NonStatic	Min	-414.187	-30.815	-3.701E-15	0.
12	0.5127	SLE-C-NL	NonStatic	Min	-414.362	-36.578	-4.407E-15	0.
12	0.	SLE-F-1-NL	NonStatic	Max	-382.901	-24.94	-2.982E-15	0.
12	0.25635	SLE-F-1-NL	NonStatic	Max	-383.076	-30.704	-3.688E-15	0.
12	0.5127	SLE-F-1-NL	NonStatic	Max	-383.25	-36.467	-4.394E-15	0.
12	0.	SLE-F-1-NL	NonStatic	Min	-382.901	-24.94	-2.982E-15	0.
12	0.25635	SLE-F-1-NL	NonStatic	Min	-383.076	-30.704	-3.688E-15	0.
12	0.5127	SLE-F-1-NL	NonStatic	Min	-383.25	-36.467	-4.394E-15	0.
12	0.	SLE-F-2-NL	NonStatic	Max	-394.451	-24.389	-2.916E-15	0.
12	0.25635	SLE-F-2-NL	NonStatic	Max	-394.626	-30.153	-3.622E-15	0.
12	0.5127	SLE-F-2-NL	NonStatic	Max	-394.801	-35.916	-4.327E-15	0.
12	0.	SLE-F-2-NL	NonStatic	Min	-394.451	-24.389	-2.916E-15	0.
12	0.25635	SLE-F-2-NL	NonStatic	Min	-394.626	-30.153	-3.622E-15	0.
12	0.5127	SLE-F-2-NL	NonStatic	Min	-394.801	-35.916	-4.327E-15	0.
12	0.	SLE-F-3-NL	NonStatic	Max	-394.221	-16.688	-1.991E-15	0.
12	0.25635	SLE-F-3-NL	NonStatic	Max	-394.396	-22.452	-2.697E-15	0.
12	0.5127	SLE-F-3-NL	NonStatic	Max	-394.571	-28.215	-3.402E-15	0.
12	0.	SLE-F-3-NL	NonStatic	Min	-394.221	-16.688	-1.991E-15	0.
12	0.25635	SLE-F-3-NL	NonStatic	Min	-394.396	-22.452	-2.697E-15	0.
12	0.5127	SLE-F-3-NL	NonStatic	Min	-394.571	-28.215	-3.402E-15	0.
12	0.	SLE-QP-NL	NonStatic	Max	-375.302	-21.093	-2.520E-15	0.
12	0.25635	SLE-QP-NL	NonStatic	Max	-375.477	-26.856	-3.226E-15	0.

Table: Element Forces - Frames, Part 1 of 2

Frame	Station	OutputCase	CaseType	StepType	P	V2	V3	T
	m				KN	KN	KN	KN-m
12	0.5127	SLE-QP-NL	NonStatic	Max	-375.652	-32.62	-3.931E-15	0.
12	0.	SLE-QP-NL	NonStatic	Min	-375.302	-21.093	-2.520E-15	0.
12	0.25635	SLE-QP-NL	NonStatic	Min	-375.477	-26.856	-3.226E-15	0.
12	0.5127	SLE-QP-NL	NonStatic	Min	-375.652	-32.62	-3.931E-15	0.
12	0.	SLV1-NL	NonStatic	Max	-476.695	-30.398	-3.638E-15	0.
12	0.25635	SLV1-NL	NonStatic	Max	-477.559	-36.222	-4.351E-15	0.
12	0.5127	SLV1-NL	NonStatic	Max	-478.424	-42.045	-5.064E-15	0.
12	0.	SLV1-NL	NonStatic	Min	-476.695	-30.398	-3.638E-15	0.
12	0.25635	SLV1-NL	NonStatic	Min	-477.559	-36.222	-4.351E-15	0.
12	0.5127	SLV1-NL	NonStatic	Min	-478.424	-42.045	-5.064E-15	0.
12	0.	SLV2-NL	NonStatic	Max	-400.681	-10.403	-1.235E-15	0.
12	0.25635	SLV2-NL	NonStatic	Max	-400.172	-16.268	-1.954E-15	0.
12	0.5127	SLV2-NL	NonStatic	Max	-399.662	-22.133	-2.672E-15	0.
12	0.	SLV2-NL	NonStatic	Min	-400.681	-10.403	-1.235E-15	0.
12	0.25635	SLV2-NL	NonStatic	Min	-400.172	-16.268	-1.954E-15	0.
12	0.5127	SLV2-NL	NonStatic	Min	-399.662	-22.133	-2.672E-15	0.
12	0.	SLV3-NL	NonStatic	Max	-474.99	-30.535	-3.654E-15	0.
12	0.25635	SLV3-NL	NonStatic	Max	-475.849	-36.197	-4.348E-15	0.
12	0.5127	SLV3-NL	NonStatic	Max	-476.708	-41.859	-5.041E-15	0.
12	0.	SLV3-NL	NonStatic	Min	-474.99	-30.535	-3.654E-15	0.
12	0.25635	SLV3-NL	NonStatic	Min	-475.849	-36.197	-4.348E-15	0.
12	0.5127	SLV3-NL	NonStatic	Min	-476.708	-41.859	-5.041E-15	0.
12	0.	SLV4-NL	NonStatic	Max	-398.976	-10.563	-1.255E-15	0.
12	0.25635	SLV4-NL	NonStatic	Max	-398.462	-16.267	-1.954E-15	0.
12	0.5127	SLV4-NL	NonStatic	Max	-397.948	-21.97	-2.652E-15	0.
12	0.	SLV4-NL	NonStatic	Min	-398.976	-10.563	-1.255E-15	0.
12	0.25635	SLV4-NL	NonStatic	Min	-398.462	-16.267	-1.954E-15	0.
12	0.5127	SLV4-NL	NonStatic	Min	-397.948	-21.97	-2.652E-15	0.
12	0.	SLV5-NL	NonStatic	Max	-408.969	-23.816	-2.846E-15	0.
12	0.25635	SLV5-NL	NonStatic	Max	-409.358	-29.843	-3.584E-15	0.
12	0.5127	SLV5-NL	NonStatic	Max	-409.748	-35.87	-4.322E-15	0.
12	0.	SLV5-NL	NonStatic	Min	-408.969	-23.816	-2.846E-15	0.
12	0.25635	SLV5-NL	NonStatic	Min	-409.358	-29.843	-3.584E-15	0.
12	0.5127	SLV5-NL	NonStatic	Min	-409.748	-35.87	-4.322E-15	0.
12	0.	SLV6-NL	NonStatic	Max	-386.196	-18.884	-2.254E-15	0.
12	0.25635	SLV6-NL	NonStatic	Max	-386.173	-24.923	-2.993E-15	0.
12	0.5127	SLV6-NL	NonStatic	Max	-386.15	-30.963	-3.733E-15	0.
12	0.	SLV6-NL	NonStatic	Min	-386.196	-18.884	-2.254E-15	0.
12	0.25635	SLV6-NL	NonStatic	Min	-386.173	-24.923	-2.993E-15	0.
12	0.5127	SLV6-NL	NonStatic	Min	-386.15	-30.963	-3.733E-15	0.
12	0.	SLV7-NL	NonStatic	Max	-403.284	-24.274	-2.903E-15	0.
12	0.25635	SLV7-NL	NonStatic	Max	-403.656	-29.761	-3.575E-15	0.
12	0.5127	SLV7-NL	NonStatic	Max	-404.029	-35.249	-4.247E-15	0.
12	0.	SLV7-NL	NonStatic	Min	-403.284	-24.274	-2.903E-15	0.
12	0.25635	SLV7-NL	NonStatic	Min	-403.656	-29.761	-3.575E-15	0.
12	0.5127	SLV7-NL	NonStatic	Min	-404.029	-35.249	-4.247E-15	0.
12	0.	SLV8-NL	NonStatic	Max	-380.513	-19.418	-2.319E-15	0.
12	0.25635	SLV8-NL	NonStatic	Max	-380.474	-24.918	-2.993E-15	0.
12	0.5127	SLV8-NL	NonStatic	Max	-380.434	-30.418	-3.666E-15	0.
12	0.	SLV8-NL	NonStatic	Min	-380.513	-19.418	-2.319E-15	0.
12	0.25635	SLV8-NL	NonStatic	Min	-380.474	-24.918	-2.993E-15	0.
12	0.5127	SLV8-NL	NonStatic	Min	-380.434	-30.418	-3.666E-15	0.
12	0.	SLV9-NL	NonStatic	Max	-435.779	-27.278	-3.263E-15	0.
12	0.25635	SLV9-NL	NonStatic	Max	-435.559	-32.973	-3.960E-15	0.

Table: Element Forces - Frames, Part 1 of 2

Frame	Station	OutputCase	CaseType	StepType	P	V2	V3	T
	m				KN	KN	KN	KN-m
12	0.5127	SLV9-NL	NonStatic	Max	-435.339	-38.667	-4.658E-15	0.
12	0.	SLV9-NL	NonStatic	Min	-435.779	-27.278	-3.263E-15	0.
12	0.25635	SLV9-NL	NonStatic	Min	-435.559	-32.973	-3.960E-15	0.
12	0.5127	SLV9-NL	NonStatic	Min	-435.339	-38.667	-4.658E-15	0.
12	0.	SLV10-NL	NonStatic	Max	-355.69	-15.257	-1.819E-15	0.
12	0.25635	SLV10-NL	NonStatic	Max	-356.255	-20.927	-2.513E-15	0.
12	0.5127	SLV10-NL	NonStatic	Max	-356.82	-26.598	-3.208E-15	0.
12	0.	SLV10-NL	NonStatic	Min	-355.69	-15.257	-1.819E-15	0.
12	0.25635	SLV10-NL	NonStatic	Min	-356.255	-20.927	-2.513E-15	0.
12	0.5127	SLV10-NL	NonStatic	Min	-356.82	-26.598	-3.208E-15	0.
12	0.	SLV11-NL	NonStatic	Max	-438.776	-28.006	-3.350E-15	0.
12	0.25635	SLV11-NL	NonStatic	Max	-438.562	-33.862	-4.067E-15	0.
12	0.5127	SLV11-NL	NonStatic	Max	-438.347	-39.718	-4.784E-15	0.
12	0.	SLV11-NL	NonStatic	Min	-438.776	-28.006	-3.350E-15	0.
12	0.25635	SLV11-NL	NonStatic	Min	-438.562	-33.862	-4.067E-15	0.
12	0.5127	SLV11-NL	NonStatic	Min	-438.347	-39.718	-4.784E-15	0.
12	0.	SLV12-NL	NonStatic	Max	-358.691	-16.085	-1.918E-15	0.
12	0.25635	SLV12-NL	NonStatic	Max	-359.261	-21.917	-2.632E-15	0.
12	0.5127	SLV12-NL	NonStatic	Max	-359.83	-27.75	-3.347E-15	0.
12	0.	SLV12-NL	NonStatic	Min	-358.691	-16.085	-1.918E-15	0.
12	0.25635	SLV12-NL	NonStatic	Min	-359.261	-21.917	-2.632E-15	0.
12	0.5127	SLV12-NL	NonStatic	Min	-359.83	-27.75	-3.347E-15	0.
12	0.	SLV13-NL	NonStatic	Max	-389.56	-21.989	-2.628E-15	0.
12	0.25635	SLV13-NL	NonStatic	Max	-389.61	-27.486	-3.301E-15	0.
12	0.5127	SLV13-NL	NonStatic	Max	-389.659	-32.984	-3.975E-15	0.
12	0.	SLV13-NL	NonStatic	Min	-389.56	-21.989	-2.628E-15	0.
12	0.25635	SLV13-NL	NonStatic	Min	-389.61	-27.486	-3.301E-15	0.
12	0.5127	SLV13-NL	NonStatic	Min	-389.659	-32.984	-3.975E-15	0.
12	0.	SLV14-NL	NonStatic	Max	-366.084	-19.295	-2.304E-15	0.
12	0.25635	SLV14-NL	NonStatic	Max	-366.369	-24.785	-2.977E-15	0.
12	0.5127	SLV14-NL	NonStatic	Max	-366.653	-30.275	-3.649E-15	0.
12	0.	SLV14-NL	NonStatic	Min	-366.084	-19.295	-2.304E-15	0.
12	0.25635	SLV14-NL	NonStatic	Min	-366.369	-24.785	-2.977E-15	0.
12	0.5127	SLV14-NL	NonStatic	Min	-366.653	-30.275	-3.649E-15	0.
12	0.	SLV15-NL	NonStatic	Max	-400.588	-24.413	-2.918E-15	0.
12	0.25635	SLV15-NL	NonStatic	Max	-400.654	-30.45	-3.657E-15	0.
12	0.5127	SLV15-NL	NonStatic	Max	-400.719	-36.486	-4.397E-15	0.
12	0.	SLV15-NL	NonStatic	Min	-400.588	-24.413	-2.918E-15	0.
12	0.25635	SLV15-NL	NonStatic	Min	-400.654	-30.45	-3.657E-15	0.
12	0.5127	SLV15-NL	NonStatic	Min	-400.719	-36.486	-4.397E-15	0.
12	0.	SLV16-NL	NonStatic	Max	-377.351	-21.944	-2.621E-15	0.
12	0.25635	SLV16-NL	NonStatic	Max	-377.652	-27.974	-3.360E-15	0.
12	0.5127	SLV16-NL	NonStatic	Max	-377.953	-34.003	-4.098E-15	0.
12	0.	SLV16-NL	NonStatic	Min	-377.351	-21.944	-2.621E-15	0.
12	0.25635	SLV16-NL	NonStatic	Min	-377.652	-27.974	-3.360E-15	0.
12	0.5127	SLV16-NL	NonStatic	Min	-377.953	-34.003	-4.098E-15	0.
13	0.	SLU 1-NL	NonStatic	Max	-546.331	48.346	5.824E-15	0.
13	0.25635	SLU 1-NL	NonStatic	Max	-546.103	40.853	4.907E-15	0.
13	0.5127	SLU 1-NL	NonStatic	Max	-545.876	33.361	3.989E-15	0.
13	0.	SLU 1-NL	NonStatic	Min	-546.331	48.346	5.824E-15	0.
13	0.25635	SLU 1-NL	NonStatic	Min	-546.103	40.853	4.907E-15	0.
13	0.5127	SLU 1-NL	NonStatic	Min	-545.876	33.361	3.989E-15	0.
13	0.	SLU 2-NL	NonStatic	Max	-428.66	51.782	6.237E-15	0.
13	0.25635	SLU 2-NL	NonStatic	Max	-428.433	44.289	5.319E-15	0.

Table: Element Forces - Frames, Part 1 of 2

Frame	Station	OutputCase	CaseType	StepType	P	V2	V3	T
	m				KN	KN	KN	KN-m
13	0.5127	SLU 2-NL	NonStatic	Max	-428.205	36.797	4.402E-15	0.
13	0.	SLU 2-NL	NonStatic	Min	-428.66	51.782	6.237E-15	0.
13	0.25635	SLU 2-NL	NonStatic	Min	-428.433	44.289	5.319E-15	0.
13	0.5127	SLU 2-NL	NonStatic	Min	-428.205	36.797	4.402E-15	0.
13	0.	SLU 3-NL	NonStatic	Max	-493.307	29.184	3.519E-15	0.
13	0.25635	SLU 3-NL	NonStatic	Max	-493.132	23.421	2.813E-15	0.
13	0.5127	SLU 3-NL	NonStatic	Max	-492.957	17.657	2.107E-15	0.
13	0.	SLU 3-NL	NonStatic	Min	-493.307	29.184	3.519E-15	0.
13	0.25635	SLU 3-NL	NonStatic	Min	-493.132	23.421	2.813E-15	0.
13	0.5127	SLU 3-NL	NonStatic	Min	-492.957	17.657	2.107E-15	0.
13	0.	SLU 4-NL	NonStatic	Max	-537.4	35.7	4.305E-15	0.
13	0.25635	SLU 4-NL	NonStatic	Max	-537.172	28.207	3.388E-15	0.
13	0.5127	SLU 4-NL	NonStatic	Max	-536.945	20.715	2.470E-15	0.
13	0.	SLU 4-NL	NonStatic	Min	-537.4	35.7	4.305E-15	0.
13	0.25635	SLU 4-NL	NonStatic	Min	-537.172	28.207	3.388E-15	0.
13	0.5127	SLU 4-NL	NonStatic	Min	-536.945	20.715	2.470E-15	0.
13	0.	SLU 5-NL	NonStatic	Max	-493.183	15.308	1.852E-15	0.
13	0.25635	SLU 5-NL	NonStatic	Max	-493.008	9.545	1.146E-15	0.
13	0.5127	SLU 5-NL	NonStatic	Max	-492.833	3.781	4.403E-16	0.
13	0.	SLU 5-NL	NonStatic	Min	-493.183	15.308	1.852E-15	0.
13	0.25635	SLU 5-NL	NonStatic	Min	-493.008	9.545	1.146E-15	0.
13	0.5127	SLU 5-NL	NonStatic	Min	-492.833	3.781	4.403E-16	0.
13	0.	SLU 6-NL	NonStatic	Max	-538.182	61.495	7.404E-15	0.
13	0.25635	SLU 6-NL	NonStatic	Max	-537.955	54.002	6.486E-15	0.
13	0.5127	SLU 6-NL	NonStatic	Max	-537.727	46.51	5.569E-15	0.
13	0.	SLU 6-NL	NonStatic	Min	-538.182	61.495	7.404E-15	0.
13	0.25635	SLU 6-NL	NonStatic	Min	-537.955	54.002	6.486E-15	0.
13	0.5127	SLU 6-NL	NonStatic	Min	-537.727	46.51	5.569E-15	0.
13	0.	SLU 7-NL	NonStatic	Max	-494.029	43.048	5.184E-15	0.
13	0.25635	SLU 7-NL	NonStatic	Max	-493.854	37.285	4.478E-15	0.
13	0.5127	SLU 7-NL	NonStatic	Max	-493.679	31.521	3.773E-15	0.
13	0.	SLU 7-NL	NonStatic	Min	-494.029	43.048	5.184E-15	0.
13	0.25635	SLU 7-NL	NonStatic	Min	-493.854	37.285	4.478E-15	0.
13	0.5127	SLU 7-NL	NonStatic	Min	-493.679	31.521	3.773E-15	0.
13	0.	SLE-C-NL	NonStatic	Max	-414.362	36.578	4.407E-15	0.
13	0.25635	SLE-C-NL	NonStatic	Max	-414.187	30.815	3.701E-15	0.
13	0.5127	SLE-C-NL	NonStatic	Max	-414.013	25.051	2.995E-15	0.
13	0.	SLE-C-NL	NonStatic	Min	-414.362	36.578	4.407E-15	0.
13	0.25635	SLE-C-NL	NonStatic	Min	-414.187	30.815	3.701E-15	0.
13	0.5127	SLE-C-NL	NonStatic	Min	-414.013	25.051	2.995E-15	0.
13	0.	SLE-F-1-NL	NonStatic	Max	-383.25	36.467	4.394E-15	0.
13	0.25635	SLE-F-1-NL	NonStatic	Max	-383.076	30.704	3.688E-15	0.
13	0.5127	SLE-F-1-NL	NonStatic	Max	-382.901	24.94	2.982E-15	0.
13	0.	SLE-F-1-NL	NonStatic	Min	-383.25	36.467	4.394E-15	0.
13	0.25635	SLE-F-1-NL	NonStatic	Min	-383.076	30.704	3.688E-15	0.
13	0.5127	SLE-F-1-NL	NonStatic	Min	-382.901	24.94	2.982E-15	0.
13	0.	SLE-F-2-NL	NonStatic	Max	-394.571	28.215	3.402E-15	0.
13	0.25635	SLE-F-2-NL	NonStatic	Max	-394.396	22.452	2.697E-15	0.
13	0.5127	SLE-F-2-NL	NonStatic	Max	-394.221	16.688	1.991E-15	0.
13	0.	SLE-F-2-NL	NonStatic	Min	-394.571	28.215	3.402E-15	0.
13	0.25635	SLE-F-2-NL	NonStatic	Min	-394.396	22.452	2.697E-15	0.
13	0.5127	SLE-F-2-NL	NonStatic	Min	-394.221	16.688	1.991E-15	0.
13	0.	SLE-F-3-NL	NonStatic	Max	-394.801	35.916	4.327E-15	0.
13	0.25635	SLE-F-3-NL	NonStatic	Max	-394.626	30.153	3.622E-15	0.

Table: Element Forces - Frames, Part 1 of 2

Frame	Station	OutputCase	CaseType	StepType	P	V2	V3	T
	m				KN	KN	KN	KN-m
13	0.5127	SLE-F-3-NL	NonStatic	Max	-394.451	24.389	2.916E-15	0.
13	0.	SLE-F-3-NL	NonStatic	Min	-394.801	35.916	4.327E-15	0.
13	0.25635	SLE-F-3-NL	NonStatic	Min	-394.626	30.153	3.622E-15	0.
13	0.5127	SLE-F-3-NL	NonStatic	Min	-394.451	24.389	2.916E-15	0.
13	0.	SLE-QP-NL	NonStatic	Max	-375.652	32.62	3.931E-15	0.
13	0.25635	SLE-QP-NL	NonStatic	Max	-375.477	26.856	3.226E-15	0.
13	0.5127	SLE-QP-NL	NonStatic	Max	-375.302	21.093	2.520E-15	0.
13	0.	SLE-QP-NL	NonStatic	Min	-375.652	32.62	3.931E-15	0.
13	0.25635	SLE-QP-NL	NonStatic	Min	-375.477	26.856	3.226E-15	0.
13	0.5127	SLE-QP-NL	NonStatic	Min	-375.302	21.093	2.520E-15	0.
13	0.	SLV1-NL	NonStatic	Max	-477.737	19.473	2.352E-15	0.
13	0.25635	SLV1-NL	NonStatic	Max	-478.099	13.612	1.635E-15	0.
13	0.5127	SLV1-NL	NonStatic	Max	-478.461	7.751	9.169E-16	0.
13	0.	SLV1-NL	NonStatic	Min	-477.737	19.473	2.352E-15	0.
13	0.25635	SLV1-NL	NonStatic	Min	-478.099	13.612	1.635E-15	0.
13	0.5127	SLV1-NL	NonStatic	Min	-478.461	7.751	9.169E-16	0.
13	0.	SLV2-NL	NonStatic	Max	-400.326	43.956	5.293E-15	0.
13	0.25635	SLV2-NL	NonStatic	Max	-399.609	38.128	4.580E-15	0.
13	0.5127	SLV2-NL	NonStatic	Max	-398.892	32.3	3.866E-15	0.
13	0.	SLV2-NL	NonStatic	Min	-400.326	43.956	5.293E-15	0.
13	0.25635	SLV2-NL	NonStatic	Min	-399.609	38.128	4.580E-15	0.
13	0.5127	SLV2-NL	NonStatic	Min	-398.892	32.3	3.866E-15	0.
13	0.	SLV3-NL	NonStatic	Max	-476.022	19.31	2.332E-15	0.
13	0.25635	SLV3-NL	NonStatic	Max	-476.389	13.611	1.634E-15	0.
13	0.5127	SLV3-NL	NonStatic	Max	-476.756	7.912	9.366E-16	0.
13	0.	SLV3-NL	NonStatic	Min	-476.022	19.31	2.332E-15	0.
13	0.25635	SLV3-NL	NonStatic	Min	-476.389	13.611	1.634E-15	0.
13	0.5127	SLV3-NL	NonStatic	Min	-476.756	7.912	9.366E-16	0.
13	0.	SLV4-NL	NonStatic	Max	-398.611	43.77	5.271E-15	0.
13	0.25635	SLV4-NL	NonStatic	Max	-397.899	38.103	4.577E-15	0.
13	0.5127	SLV4-NL	NonStatic	Max	-397.187	32.437	3.883E-15	0.
13	0.	SLV4-NL	NonStatic	Min	-398.611	43.77	5.271E-15	0.
13	0.25635	SLV4-NL	NonStatic	Min	-397.899	38.103	4.577E-15	0.
13	0.5127	SLV4-NL	NonStatic	Min	-397.187	32.437	3.883E-15	0.
13	0.	SLV5-NL	NonStatic	Max	-409.575	30.168	3.638E-15	0.
13	0.25635	SLV5-NL	NonStatic	Max	-409.553	24.13	2.898E-15	0.
13	0.5127	SLV5-NL	NonStatic	Max	-409.532	18.092	2.159E-15	0.
13	0.	SLV5-NL	NonStatic	Min	-409.575	30.168	3.638E-15	0.
13	0.25635	SLV5-NL	NonStatic	Min	-409.553	24.13	2.898E-15	0.
13	0.5127	SLV5-NL	NonStatic	Min	-409.532	18.092	2.159E-15	0.
13	0.	SLV6-NL	NonStatic	Max	-386.317	36.447	4.392E-15	0.
13	0.25635	SLV6-NL	NonStatic	Max	-385.972	30.419	3.654E-15	0.
13	0.5127	SLV6-NL	NonStatic	Max	-385.627	24.39	2.915E-15	0.
13	0.	SLV6-NL	NonStatic	Min	-386.317	36.447	4.392E-15	0.
13	0.25635	SLV6-NL	NonStatic	Min	-385.972	30.419	3.654E-15	0.
13	0.5127	SLV6-NL	NonStatic	Min	-385.627	24.39	2.915E-15	0.
13	0.	SLV7-NL	NonStatic	Max	-403.859	29.624	3.571E-15	0.
13	0.25635	SLV7-NL	NonStatic	Max	-403.854	24.125	2.898E-15	0.
13	0.5127	SLV7-NL	NonStatic	Max	-403.849	18.627	2.224E-15	0.
13	0.	SLV7-NL	NonStatic	Min	-403.859	29.624	3.571E-15	0.
13	0.25635	SLV7-NL	NonStatic	Min	-403.854	24.125	2.898E-15	0.
13	0.5127	SLV7-NL	NonStatic	Min	-403.849	18.627	2.224E-15	0.
13	0.	SLV8-NL	NonStatic	Max	-380.598	35.826	4.316E-15	0.
13	0.25635	SLV8-NL	NonStatic	Max	-380.27	30.337	3.644E-15	0.

Table: Element Forces - Frames, Part 1 of 2

Frame	Station	OutputCase	CaseType	StepType	P	V2	V3	T
	m				KN	KN	KN	KN-m
13	0.5127	SLV8-NL	NonStatic	Max	-379.941	24.848	2.972E-15	0.
13	0.	SLV8-NL	NonStatic	Min	-380.598	35.826	4.316E-15	0.
13	0.25635	SLV8-NL	NonStatic	Min	-380.27	30.337	3.644E-15	0.
13	0.5127	SLV8-NL	NonStatic	Min	-379.941	24.848	2.972E-15	0.
13	0.	SLV9-NL	NonStatic	Max	-434.896	23.943	2.889E-15	0.
13	0.25635	SLV9-NL	NonStatic	Max	-434.185	18.277	2.195E-15	0.
13	0.5127	SLV9-NL	NonStatic	Max	-433.473	12.611	1.501E-15	0.
13	0.	SLV9-NL	NonStatic	Min	-434.896	23.943	2.889E-15	0.
13	0.25635	SLV9-NL	NonStatic	Min	-434.185	18.277	2.195E-15	0.
13	0.5127	SLV9-NL	NonStatic	Min	-433.473	12.611	1.501E-15	0.
13	0.	SLV10-NL	NonStatic	Max	-357.24	40.584	4.888E-15	0.
13	0.25635	SLV10-NL	NonStatic	Max	-357.607	34.885	4.190E-15	0.
13	0.5127	SLV10-NL	NonStatic	Max	-357.974	29.186	3.492E-15	0.
13	0.	SLV10-NL	NonStatic	Min	-357.24	40.584	4.888E-15	0.
13	0.25635	SLV10-NL	NonStatic	Min	-357.607	34.885	4.190E-15	0.
13	0.5127	SLV10-NL	NonStatic	Min	-357.974	29.186	3.492E-15	0.
13	0.	SLV11-NL	NonStatic	Max	-437.907	25.095	3.028E-15	0.
13	0.25635	SLV11-NL	NonStatic	Max	-437.191	19.267	2.314E-15	0.
13	0.5127	SLV11-NL	NonStatic	Max	-436.474	13.439	1.600E-15	0.
13	0.	SLV11-NL	NonStatic	Min	-437.907	25.095	3.028E-15	0.
13	0.25635	SLV11-NL	NonStatic	Min	-437.191	19.267	2.314E-15	0.
13	0.5127	SLV11-NL	NonStatic	Min	-436.474	13.439	1.600E-15	0.
13	0.	SLV12-NL	NonStatic	Max	-360.247	41.635	5.015E-15	0.
13	0.25635	SLV12-NL	NonStatic	Max	-360.609	35.774	4.297E-15	0.
13	0.5127	SLV12-NL	NonStatic	Max	-360.971	29.913	3.579E-15	0.
13	0.	SLV12-NL	NonStatic	Min	-360.247	41.635	5.015E-15	0.
13	0.25635	SLV12-NL	NonStatic	Min	-360.609	35.774	4.297E-15	0.
13	0.5127	SLV12-NL	NonStatic	Min	-360.971	29.913	3.579E-15	0.
13	0.	SLV13-NL	NonStatic	Max	-389.555	29.511	3.557E-15	0.
13	0.25635	SLV13-NL	NonStatic	Max	-389.226	24.022	2.885E-15	0.
13	0.5127	SLV13-NL	NonStatic	Max	-388.898	18.533	2.213E-15	0.
13	0.	SLV13-NL	NonStatic	Min	-389.555	29.511	3.557E-15	0.
13	0.25635	SLV13-NL	NonStatic	Min	-389.226	24.022	2.885E-15	0.
13	0.5127	SLV13-NL	NonStatic	Min	-388.898	18.533	2.213E-15	0.
13	0.	SLV14-NL	NonStatic	Max	-366.751	33.56	4.044E-15	0.
13	0.25635	SLV14-NL	NonStatic	Max	-366.746	28.061	3.370E-15	0.
13	0.5127	SLV14-NL	NonStatic	Max	-366.741	22.563	2.697E-15	0.
13	0.	SLV14-NL	NonStatic	Min	-366.751	33.56	4.044E-15	0.
13	0.25635	SLV14-NL	NonStatic	Min	-366.746	28.061	3.370E-15	0.
13	0.5127	SLV14-NL	NonStatic	Min	-366.741	22.563	2.697E-15	0.
13	0.	SLV15-NL	NonStatic	Max	-400.624	33.29	4.013E-15	0.
13	0.25635	SLV15-NL	NonStatic	Max	-400.279	27.262	3.274E-15	0.
13	0.5127	SLV15-NL	NonStatic	Max	-399.934	21.234	2.536E-15	0.
13	0.	SLV15-NL	NonStatic	Min	-400.624	33.29	4.013E-15	0.
13	0.25635	SLV15-NL	NonStatic	Min	-400.279	27.262	3.274E-15	0.
13	0.5127	SLV15-NL	NonStatic	Min	-399.934	21.234	2.536E-15	0.
13	0.	SLV16-NL	NonStatic	Max	-378.045	37.101	4.470E-15	0.
13	0.25635	SLV16-NL	NonStatic	Max	-378.024	31.063	3.731E-15	0.
13	0.5127	SLV16-NL	NonStatic	Max	-378.003	25.025	2.991E-15	0.
13	0.	SLV16-NL	NonStatic	Min	-378.045	37.101	4.470E-15	0.
13	0.25635	SLV16-NL	NonStatic	Min	-378.024	31.063	3.731E-15	0.
13	0.5127	SLV16-NL	NonStatic	Min	-378.003	25.025	2.991E-15	0.
14	0.	SLU 1-NL	NonStatic	Max	-550.841	129.778	1.560E-14	0.
14	0.25635	SLU 1-NL	NonStatic	Max	-550.16	122.313	1.469E-14	0.

Table: Element Forces - Frames, Part 1 of 2

Frame	Station	OutputCase	CaseType	StepType	P	V2	V3	T
	m				KN	KN	KN	KN-m
14	0.5127	SLU 1-NL	NonStatic	Max	-549.479	114.848	1.378E-14	0.
14	0.	SLU 1-NL	NonStatic	Min	-550.841	129.778	1.560E-14	0.
14	0.25635	SLU 1-NL	NonStatic	Min	-550.16	122.313	1.469E-14	0.
14	0.5127	SLU 1-NL	NonStatic	Min	-549.479	114.848	1.378E-14	0.
14	0.	SLU 2-NL	NonStatic	Max	-433.589	140.089	1.684E-14	0.
14	0.25635	SLU 2-NL	NonStatic	Max	-432.907	132.624	1.593E-14	0.
14	0.5127	SLU 2-NL	NonStatic	Max	-432.226	125.159	1.501E-14	0.
14	0.	SLU 2-NL	NonStatic	Min	-433.589	140.089	1.684E-14	0.
14	0.25635	SLU 2-NL	NonStatic	Min	-432.907	132.624	1.593E-14	0.
14	0.5127	SLU 2-NL	NonStatic	Min	-432.226	125.159	1.501E-14	0.
14	0.	SLU 3-NL	NonStatic	Max	-495.802	75.839	9.122E-15	0.
14	0.25635	SLU 3-NL	NonStatic	Max	-495.277	70.097	8.419E-15	0.
14	0.5127	SLU 3-NL	NonStatic	Max	-494.753	64.355	7.716E-15	0.
14	0.	SLU 3-NL	NonStatic	Min	-495.802	75.839	9.122E-15	0.
14	0.25635	SLU 3-NL	NonStatic	Min	-495.277	70.097	8.419E-15	0.
14	0.5127	SLU 3-NL	NonStatic	Min	-494.753	64.355	7.716E-15	0.
14	0.	SLU 4-NL	NonStatic	Max	-541.191	118.717	1.428E-14	0.
14	0.25635	SLU 4-NL	NonStatic	Max	-540.51	111.252	1.336E-14	0.
14	0.5127	SLU 4-NL	NonStatic	Max	-539.828	103.787	1.245E-14	0.
14	0.	SLU 4-NL	NonStatic	Min	-541.191	118.717	1.428E-14	0.
14	0.25635	SLU 4-NL	NonStatic	Min	-540.51	111.252	1.336E-14	0.
14	0.5127	SLU 4-NL	NonStatic	Min	-539.828	103.787	1.245E-14	0.
14	0.	SLU 5-NL	NonStatic	Max	-494.866	63.107	7.593E-15	0.
14	0.25635	SLU 5-NL	NonStatic	Max	-494.342	57.364	6.890E-15	0.
14	0.5127	SLU 5-NL	NonStatic	Max	-493.818	51.622	6.186E-15	0.
14	0.	SLU 5-NL	NonStatic	Min	-494.866	63.107	7.593E-15	0.
14	0.25635	SLU 5-NL	NonStatic	Min	-494.342	57.364	6.890E-15	0.
14	0.5127	SLU 5-NL	NonStatic	Min	-493.818	51.622	6.186E-15	0.
14	0.	SLU 6-NL	NonStatic	Max	-543.473	142.347	1.711E-14	0.
14	0.25635	SLU 6-NL	NonStatic	Max	-542.791	134.883	1.620E-14	0.
14	0.5127	SLU 6-NL	NonStatic	Max	-542.11	127.418	1.529E-14	0.
14	0.	SLU 6-NL	NonStatic	Min	-543.473	142.347	1.711E-14	0.
14	0.25635	SLU 6-NL	NonStatic	Min	-542.791	134.883	1.620E-14	0.
14	0.5127	SLU 6-NL	NonStatic	Min	-542.11	127.418	1.529E-14	0.
14	0.	SLU 7-NL	NonStatic	Max	-497.334	88.537	1.065E-14	0.
14	0.25635	SLU 7-NL	NonStatic	Max	-496.81	82.794	9.944E-15	0.
14	0.5127	SLU 7-NL	NonStatic	Max	-496.286	77.052	9.241E-15	0.
14	0.	SLU 7-NL	NonStatic	Min	-497.334	88.537	1.065E-14	0.
14	0.25635	SLU 7-NL	NonStatic	Min	-496.81	82.794	9.944E-15	0.
14	0.5127	SLU 7-NL	NonStatic	Min	-496.286	77.052	9.241E-15	0.
14	0.	SLE-C-NL	NonStatic	Max	-417.757	98.	1.178E-14	0.
14	0.25635	SLE-C-NL	NonStatic	Max	-417.232	92.258	1.108E-14	0.
14	0.5127	SLE-C-NL	NonStatic	Max	-416.708	86.516	1.038E-14	0.
14	0.	SLE-C-NL	NonStatic	Min	-417.757	98.	1.178E-14	0.
14	0.25635	SLE-C-NL	NonStatic	Min	-417.232	92.258	1.108E-14	0.
14	0.5127	SLE-C-NL	NonStatic	Min	-416.708	86.516	1.038E-14	0.
14	0.	SLE-F-1-NL	NonStatic	Max	-386.631	97.674	1.174E-14	0.
14	0.25635	SLE-F-1-NL	NonStatic	Max	-386.107	91.931	1.104E-14	0.
14	0.5127	SLE-F-1-NL	NonStatic	Max	-385.583	86.189	1.034E-14	0.
14	0.	SLE-F-1-NL	NonStatic	Min	-386.631	97.674	1.174E-14	0.
14	0.25635	SLE-F-1-NL	NonStatic	Min	-386.107	91.931	1.104E-14	0.
14	0.5127	SLE-F-1-NL	NonStatic	Min	-385.583	86.189	1.034E-14	0.
14	0.	SLE-F-2-NL	NonStatic	Max	-397.194	80.915	9.732E-15	0.
14	0.25635	SLE-F-2-NL	NonStatic	Max	-396.67	75.173	9.029E-15	0.

Table: Element Forces - Frames, Part 1 of 2

Frame	Station	OutputCase	CaseType	StepType	P	V2	V3	T
	m				KN	KN	KN	KN-m
14	0.5127	SLE-F-2-NL	NonStatic	Max	-396.146	69.431	8.326E-15	0.
14	0.	SLE-F-2-NL	NonStatic	Min	-397.194	80.915	9.732E-15	0.
14	0.25635	SLE-F-2-NL	NonStatic	Min	-396.67	75.173	9.029E-15	0.
14	0.5127	SLE-F-2-NL	NonStatic	Min	-396.146	69.431	8.326E-15	0.
14	0.	SLE-F-3-NL	NonStatic	Max	-397.869	88.057	1.059E-14	0.
14	0.25635	SLE-F-3-NL	NonStatic	Max	-397.344	82.315	9.887E-15	0.
14	0.5127	SLE-F-3-NL	NonStatic	Max	-396.82	76.573	9.183E-15	0.
14	0.	SLE-F-3-NL	NonStatic	Min	-397.869	88.057	1.059E-14	0.
14	0.25635	SLE-F-3-NL	NonStatic	Min	-397.344	82.315	9.887E-15	0.
14	0.5127	SLE-F-3-NL	NonStatic	Min	-396.82	76.573	9.183E-15	0.
14	0.	SLE-QP-NL	NonStatic	Max	-378.565	86.149	1.036E-14	0.
14	0.25635	SLE-QP-NL	NonStatic	Max	-378.04	80.407	9.657E-15	0.
14	0.5127	SLE-QP-NL	NonStatic	Max	-377.516	74.665	8.954E-15	0.
14	0.	SLE-QP-NL	NonStatic	Min	-378.565	86.149	1.036E-14	0.
14	0.25635	SLE-QP-NL	NonStatic	Min	-378.04	80.407	9.657E-15	0.
14	0.5127	SLE-QP-NL	NonStatic	Min	-377.516	74.665	8.954E-15	0.
14	0.	SLV1-NL	NonStatic	Max	-480.832	70.163	8.441E-15	0.
14	0.25635	SLV1-NL	NonStatic	Max	-480.838	64.291	7.722E-15	0.
14	0.5127	SLV1-NL	NonStatic	Max	-480.844	58.419	7.002E-15	0.
14	0.	SLV1-NL	NonStatic	Min	-480.832	70.163	8.441E-15	0.
14	0.25635	SLV1-NL	NonStatic	Min	-480.838	64.291	7.722E-15	0.
14	0.5127	SLV1-NL	NonStatic	Min	-480.844	58.419	7.002E-15	0.
14	0.	SLV2-NL	NonStatic	Max	-402.83	97.142	1.168E-14	0.
14	0.25635	SLV2-NL	NonStatic	Max	-401.761	91.368	1.097E-14	0.
14	0.5127	SLV2-NL	NonStatic	Max	-400.693	85.594	1.027E-14	0.
14	0.	SLV2-NL	NonStatic	Min	-402.83	97.142	1.168E-14	0.
14	0.25635	SLV2-NL	NonStatic	Min	-401.761	91.368	1.097E-14	0.
14	0.5127	SLV2-NL	NonStatic	Min	-400.693	85.594	1.027E-14	0.
14	0.	SLV3-NL	NonStatic	Max	-479.126	69.973	8.418E-15	0.
14	0.25635	SLV3-NL	NonStatic	Max	-479.147	64.263	7.718E-15	0.
14	0.5127	SLV3-NL	NonStatic	Max	-479.167	58.552	7.019E-15	0.
14	0.	SLV3-NL	NonStatic	Min	-479.126	69.973	8.418E-15	0.
14	0.25635	SLV3-NL	NonStatic	Min	-479.147	64.263	7.718E-15	0.
14	0.5127	SLV3-NL	NonStatic	Min	-479.167	58.552	7.019E-15	0.
14	0.	SLV4-NL	NonStatic	Max	-401.123	96.93	1.166E-14	0.
14	0.25635	SLV4-NL	NonStatic	Max	-400.069	91.318	1.097E-14	0.
14	0.5127	SLV4-NL	NonStatic	Max	-399.014	85.705	1.028E-14	0.
14	0.	SLV4-NL	NonStatic	Min	-401.123	96.93	1.166E-14	0.
14	0.25635	SLV4-NL	NonStatic	Min	-400.069	91.318	1.097E-14	0.
14	0.5127	SLV4-NL	NonStatic	Min	-399.014	85.705	1.028E-14	0.
14	0.	SLV5-NL	NonStatic	Max	-412.646	84.228	1.013E-14	0.
14	0.25635	SLV5-NL	NonStatic	Max	-412.258	78.203	9.393E-15	0.
14	0.5127	SLV5-NL	NonStatic	Max	-411.871	72.177	8.655E-15	0.
14	0.	SLV5-NL	NonStatic	Min	-412.646	84.228	1.013E-14	0.
14	0.25635	SLV5-NL	NonStatic	Min	-412.258	78.203	9.393E-15	0.
14	0.5127	SLV5-NL	NonStatic	Min	-411.871	72.177	8.655E-15	0.
14	0.	SLV6-NL	NonStatic	Max	-389.147	91.331	1.098E-14	0.
14	0.25635	SLV6-NL	NonStatic	Max	-388.437	85.335	1.025E-14	0.
14	0.5127	SLV6-NL	NonStatic	Max	-387.727	79.339	9.515E-15	0.
14	0.	SLV6-NL	NonStatic	Min	-389.147	91.331	1.098E-14	0.
14	0.25635	SLV6-NL	NonStatic	Min	-388.437	85.335	1.025E-14	0.
14	0.5127	SLV6-NL	NonStatic	Min	-387.727	79.339	9.515E-15	0.
14	0.	SLV7-NL	NonStatic	Max	-406.959	83.596	1.005E-14	0.
14	0.25635	SLV7-NL	NonStatic	Max	-406.621	78.108	9.381E-15	0.

Table: Element Forces - Frames, Part 1 of 2

Frame	Station	OutputCase	CaseType	StepType	P	V2	V3	T
	m				KN	KN	KN	KN-m
14	0.5127	SLV7-NL	NonStatic	Max	-406.282	72.62	8.709E-15	0.
14	0.	SLV7-NL	NonStatic	Min	-406.959	83.596	1.005E-14	0.
14	0.25635	SLV7-NL	NonStatic	Min	-406.621	78.108	9.381E-15	0.
14	0.5127	SLV7-NL	NonStatic	Min	-406.282	72.62	8.709E-15	0.
14	0.	SLV8-NL	NonStatic	Max	-383.454	90.628	1.090E-14	0.
14	0.25635	SLV8-NL	NonStatic	Max	-382.793	85.169	1.023E-14	0.
14	0.5127	SLV8-NL	NonStatic	Max	-382.132	79.71	9.561E-15	0.
14	0.	SLV8-NL	NonStatic	Min	-383.454	90.628	1.090E-14	0.
14	0.25635	SLV8-NL	NonStatic	Min	-382.793	85.169	1.023E-14	0.
14	0.5127	SLV8-NL	NonStatic	Min	-382.132	79.71	9.561E-15	0.
14	0.	SLV9-NL	NonStatic	Max	-436.161	75.564	9.089E-15	0.
14	0.25635	SLV9-NL	NonStatic	Max	-435.106	69.952	8.402E-15	0.
14	0.5127	SLV9-NL	NonStatic	Max	-434.052	64.339	7.714E-15	0.
14	0.	SLV9-NL	NonStatic	Min	-436.161	75.564	9.089E-15	0.
14	0.25635	SLV9-NL	NonStatic	Min	-435.106	69.952	8.402E-15	0.
14	0.5127	SLV9-NL	NonStatic	Min	-434.052	64.339	7.714E-15	0.
14	0.	SLV10-NL	NonStatic	Max	-361.767	95.678	1.151E-14	0.
14	0.25635	SLV10-NL	NonStatic	Max	-361.788	89.967	1.081E-14	0.
14	0.5127	SLV10-NL	NonStatic	Max	-361.808	84.256	1.011E-14	0.
14	0.	SLV10-NL	NonStatic	Min	-361.767	95.678	1.151E-14	0.
14	0.25635	SLV10-NL	NonStatic	Min	-361.788	89.967	1.081E-14	0.
14	0.5127	SLV10-NL	NonStatic	Min	-361.808	84.256	1.011E-14	0.
14	0.	SLV11-NL	NonStatic	Max	-439.279	78.587	9.452E-15	0.
14	0.25635	SLV11-NL	NonStatic	Max	-438.21	72.813	8.745E-15	0.
14	0.5127	SLV11-NL	NonStatic	Max	-437.141	67.039	8.038E-15	0.
14	0.	SLV11-NL	NonStatic	Min	-439.279	78.587	9.452E-15	0.
14	0.25635	SLV11-NL	NonStatic	Min	-438.21	72.813	8.745E-15	0.
14	0.5127	SLV11-NL	NonStatic	Min	-437.141	67.039	8.038E-15	0.
14	0.	SLV12-NL	NonStatic	Max	-364.876	98.607	1.186E-14	0.
14	0.25635	SLV12-NL	NonStatic	Max	-364.882	92.735	1.114E-14	0.
14	0.5127	SLV12-NL	NonStatic	Max	-364.888	86.863	1.042E-14	0.
14	0.	SLV12-NL	NonStatic	Min	-364.876	98.607	1.186E-14	0.
14	0.25635	SLV12-NL	NonStatic	Min	-364.882	92.735	1.114E-14	0.
14	0.5127	SLV12-NL	NonStatic	Min	-364.888	86.863	1.042E-14	0.
14	0.	SLV13-NL	NonStatic	Max	-391.927	80.972	9.738E-15	0.
14	0.25635	SLV13-NL	NonStatic	Max	-391.266	75.514	9.070E-15	0.
14	0.5127	SLV13-NL	NonStatic	Max	-390.605	70.055	8.401E-15	0.
14	0.	SLV13-NL	NonStatic	Min	-391.927	80.972	9.738E-15	0.
14	0.25635	SLV13-NL	NonStatic	Min	-391.266	75.514	9.070E-15	0.
14	0.5127	SLV13-NL	NonStatic	Min	-390.605	70.055	8.401E-15	0.
14	0.	SLV14-NL	NonStatic	Max	-370.045	86.098	1.035E-14	0.
14	0.25635	SLV14-NL	NonStatic	Max	-369.707	80.61	9.682E-15	0.
14	0.5127	SLV14-NL	NonStatic	Max	-369.369	75.122	9.010E-15	0.
14	0.	SLV14-NL	NonStatic	Min	-370.045	86.098	1.035E-14	0.
14	0.25635	SLV14-NL	NonStatic	Min	-369.707	80.61	9.682E-15	0.
14	0.5127	SLV14-NL	NonStatic	Min	-369.369	75.122	9.010E-15	0.
14	0.	SLV15-NL	NonStatic	Max	-403.349	90.932	1.094E-14	0.
14	0.25635	SLV15-NL	NonStatic	Max	-402.639	84.935	1.020E-14	0.
14	0.5127	SLV15-NL	NonStatic	Max	-401.929	78.939	9.467E-15	0.
14	0.	SLV15-NL	NonStatic	Min	-403.349	90.932	1.094E-14	0.
14	0.25635	SLV15-NL	NonStatic	Min	-402.639	84.935	1.020E-14	0.
14	0.5127	SLV15-NL	NonStatic	Min	-401.929	78.939	9.467E-15	0.
14	0.	SLV16-NL	NonStatic	Max	-381.678	95.819	1.152E-14	0.
14	0.25635	SLV16-NL	NonStatic	Max	-381.29	89.793	1.078E-14	0.

Table: Element Forces - Frames, Part 1 of 2

Frame	Station	OutputCase	CaseType	StepType	P	V2	V3	T
	m				KN	KN	KN	KN-m
14	0.5127	SLV16-NL	NonStatic	Max	-380.903	83.767	1.005E-14	0.
14	0.	SLV16-NL	NonStatic	Min	-381.678	95.819	1.152E-14	0.
14	0.25635	SLV16-NL	NonStatic	Min	-381.29	89.793	1.078E-14	0.
14	0.5127	SLV16-NL	NonStatic	Min	-380.903	83.767	1.005E-14	0.
15	0.	SLU 1-NL	NonStatic	Max	-559.378	210.436	2.529E-14	0.
15	0.25635	SLU 1-NL	NonStatic	Max	-558.245	203.027	2.438E-14	0.
15	0.5127	SLU 1-NL	NonStatic	Max	-557.113	195.617	2.348E-14	0.
15	0.	SLU 1-NL	NonStatic	Min	-559.378	210.436	2.529E-14	0.
15	0.25635	SLU 1-NL	NonStatic	Min	-558.245	203.027	2.438E-14	0.
15	0.5127	SLU 1-NL	NonStatic	Min	-557.113	195.617	2.348E-14	0.
15	0.	SLU 2-NL	NonStatic	Max	-442.963	227.631	2.736E-14	0.
15	0.25635	SLU 2-NL	NonStatic	Max	-441.83	220.221	2.645E-14	0.
15	0.5127	SLU 2-NL	NonStatic	Max	-440.697	212.811	2.554E-14	0.
15	0.	SLU 2-NL	NonStatic	Min	-442.963	227.631	2.736E-14	0.
15	0.25635	SLU 2-NL	NonStatic	Min	-441.83	220.221	2.645E-14	0.
15	0.5127	SLU 2-NL	NonStatic	Min	-440.697	212.811	2.554E-14	0.
15	0.	SLU 3-NL	NonStatic	Max	-500.422	121.976	1.466E-14	0.
15	0.25635	SLU 3-NL	NonStatic	Max	-499.551	116.276	1.397E-14	0.
15	0.5127	SLU 3-NL	NonStatic	Max	-498.68	110.576	1.327E-14	0.
15	0.	SLU 3-NL	NonStatic	Min	-500.422	121.976	1.466E-14	0.
15	0.25635	SLU 3-NL	NonStatic	Min	-499.551	116.276	1.397E-14	0.
15	0.5127	SLU 3-NL	NonStatic	Min	-498.68	110.576	1.327E-14	0.
15	0.	SLU 4-NL	NonStatic	Max	-549.139	202.037	2.428E-14	0.
15	0.25635	SLU 4-NL	NonStatic	Max	-548.006	194.627	2.338E-14	0.
15	0.5127	SLU 4-NL	NonStatic	Max	-546.873	187.217	2.247E-14	0.
15	0.	SLU 4-NL	NonStatic	Min	-549.139	202.037	2.428E-14	0.
15	0.25635	SLU 4-NL	NonStatic	Min	-548.006	194.627	2.338E-14	0.
15	0.5127	SLU 4-NL	NonStatic	Min	-546.873	187.217	2.247E-14	0.
15	0.	SLU 5-NL	NonStatic	Max	-498.78	111.535	1.341E-14	0.
15	0.25635	SLU 5-NL	NonStatic	Max	-497.908	105.835	1.271E-14	0.
15	0.5127	SLU 5-NL	NonStatic	Max	-497.037	100.135	1.201E-14	0.
15	0.	SLU 5-NL	NonStatic	Min	-498.78	111.535	1.341E-14	0.
15	0.25635	SLU 5-NL	NonStatic	Min	-497.908	105.835	1.271E-14	0.
15	0.5127	SLU 5-NL	NonStatic	Min	-497.037	100.135	1.201E-14	0.
15	0.	SLU 6-NL	NonStatic	Max	-552.722	221.349	2.660E-14	0.
15	0.25635	SLU 6-NL	NonStatic	Max	-551.589	213.939	2.570E-14	0.
15	0.5127	SLU 6-NL	NonStatic	Max	-550.456	206.53	2.479E-14	0.
15	0.	SLU 6-NL	NonStatic	Min	-552.722	221.349	2.660E-14	0.
15	0.25635	SLU 6-NL	NonStatic	Min	-551.589	213.939	2.570E-14	0.
15	0.5127	SLU 6-NL	NonStatic	Min	-550.456	206.53	2.479E-14	0.
15	0.	SLU 7-NL	NonStatic	Max	-502.659	132.356	1.591E-14	0.
15	0.25635	SLU 7-NL	NonStatic	Max	-501.788	126.656	1.521E-14	0.
15	0.5127	SLU 7-NL	NonStatic	Max	-500.917	120.956	1.451E-14	0.
15	0.	SLU 7-NL	NonStatic	Min	-502.659	132.356	1.591E-14	0.
15	0.25635	SLU 7-NL	NonStatic	Min	-501.788	126.656	1.521E-14	0.
15	0.5127	SLU 7-NL	NonStatic	Min	-500.917	120.956	1.451E-14	0.
15	0.	SLE-C-NL	NonStatic	Max	-424.173	158.839	1.909E-14	0.
15	0.25635	SLE-C-NL	NonStatic	Max	-423.302	153.139	1.839E-14	0.
15	0.5127	SLE-C-NL	NonStatic	Max	-422.43	147.439	1.770E-14	0.
15	0.	SLE-C-NL	NonStatic	Min	-424.173	158.839	1.909E-14	0.
15	0.25635	SLE-C-NL	NonStatic	Min	-423.302	153.139	1.839E-14	0.
15	0.5127	SLE-C-NL	NonStatic	Min	-422.43	147.439	1.770E-14	0.
15	0.	SLE-F-1-NL	NonStatic	Max	-393.022	158.313	1.903E-14	0.
15	0.25635	SLE-F-1-NL	NonStatic	Max	-392.15	152.613	1.833E-14	0.

Table: Element Forces - Frames, Part 1 of 2

Frame	Station	OutputCase	CaseType	StepType	P	V2	V3	T
	m				KN	KN	KN	KN-m
15	0.5127	SLE-F-1-NL	NonStatic	Max	-391.279	146.913	1.763E-14	0.
15	0.	SLE-F-1-NL	NonStatic	Min	-393.022	158.313	1.903E-14	0.
15	0.25635	SLE-F-1-NL	NonStatic	Min	-392.15	152.613	1.833E-14	0.
15	0.5127	SLE-F-1-NL	NonStatic	Min	-391.279	146.913	1.763E-14	0.
15	0.	SLE-F-2-NL	NonStatic	Max	-402.32	133.382	1.603E-14	0.
15	0.25635	SLE-F-2-NL	NonStatic	Max	-401.448	127.682	1.534E-14	0.
15	0.5127	SLE-F-2-NL	NonStatic	Max	-400.577	121.982	1.464E-14	0.
15	0.	SLE-F-2-NL	NonStatic	Min	-402.32	133.382	1.603E-14	0.
15	0.25635	SLE-F-2-NL	NonStatic	Min	-401.448	127.682	1.534E-14	0.
15	0.5127	SLE-F-2-NL	NonStatic	Min	-400.577	121.982	1.464E-14	0.
15	0.	SLE-F-3-NL	NonStatic	Max	-403.387	139.408	1.676E-14	0.
15	0.25635	SLE-F-3-NL	NonStatic	Max	-402.516	133.708	1.606E-14	0.
15	0.5127	SLE-F-3-NL	NonStatic	Max	-401.644	128.008	1.536E-14	0.
15	0.	SLE-F-3-NL	NonStatic	Min	-403.387	139.408	1.676E-14	0.
15	0.25635	SLE-F-3-NL	NonStatic	Min	-402.516	133.708	1.606E-14	0.
15	0.5127	SLE-F-3-NL	NonStatic	Min	-401.644	128.008	1.536E-14	0.
15	0.	SLE-QP-NL	NonStatic	Max	-384.022	139.169	1.673E-14	0.
15	0.25635	SLE-QP-NL	NonStatic	Max	-383.15	133.469	1.603E-14	0.
15	0.5127	SLE-QP-NL	NonStatic	Max	-382.279	127.769	1.533E-14	0.
15	0.	SLE-QP-NL	NonStatic	Min	-384.022	139.169	1.673E-14	0.
15	0.25635	SLE-QP-NL	NonStatic	Min	-383.15	133.469	1.603E-14	0.
15	0.5127	SLE-QP-NL	NonStatic	Min	-382.279	127.769	1.533E-14	0.
15	0.	SLV1-NL	NonStatic	Max	-486.313	121.334	1.459E-14	0.
15	0.25635	SLV1-NL	NonStatic	Max	-485.963	115.472	1.387E-14	0.
15	0.5127	SLV1-NL	NonStatic	Max	-485.613	109.611	1.315E-14	0.
15	0.	SLV1-NL	NonStatic	Min	-486.313	121.334	1.459E-14	0.
15	0.25635	SLV1-NL	NonStatic	Min	-485.963	115.472	1.387E-14	0.
15	0.5127	SLV1-NL	NonStatic	Min	-485.613	109.611	1.315E-14	0.
15	0.	SLV2-NL	NonStatic	Max	-407.824	148.811	1.789E-14	0.
15	0.25635	SLV2-NL	NonStatic	Max	-406.407	143.113	1.719E-14	0.
15	0.5127	SLV2-NL	NonStatic	Max	-404.99	137.415	1.649E-14	0.
15	0.	SLV2-NL	NonStatic	Min	-407.824	148.811	1.789E-14	0.
15	0.25635	SLV2-NL	NonStatic	Min	-406.407	143.113	1.719E-14	0.
15	0.5127	SLV2-NL	NonStatic	Min	-404.99	137.415	1.649E-14	0.
15	0.	SLV3-NL	NonStatic	Max	-484.634	121.117	1.456E-14	0.
15	0.25635	SLV3-NL	NonStatic	Max	-484.308	115.416	1.386E-14	0.
15	0.5127	SLV3-NL	NonStatic	Max	-483.983	109.715	1.316E-14	0.
15	0.	SLV3-NL	NonStatic	Min	-484.634	121.117	1.456E-14	0.
15	0.25635	SLV3-NL	NonStatic	Min	-484.308	115.416	1.386E-14	0.
15	0.5127	SLV3-NL	NonStatic	Min	-483.983	109.715	1.316E-14	0.
15	0.	SLV4-NL	NonStatic	Max	-406.142	148.576	1.786E-14	0.
15	0.25635	SLV4-NL	NonStatic	Max	-404.749	143.038	1.718E-14	0.
15	0.5127	SLV4-NL	NonStatic	Max	-403.357	137.499	1.650E-14	0.
15	0.	SLV4-NL	NonStatic	Min	-406.142	148.576	1.786E-14	0.
15	0.25635	SLV4-NL	NonStatic	Min	-404.749	143.038	1.718E-14	0.
15	0.5127	SLV4-NL	NonStatic	Min	-403.357	137.499	1.650E-14	0.
15	0.	SLV5-NL	NonStatic	Max	-418.266	138.028	1.659E-14	0.
15	0.25635	SLV5-NL	NonStatic	Max	-417.514	132.036	1.586E-14	0.
15	0.5127	SLV5-NL	NonStatic	Max	-416.762	126.045	1.512E-14	0.
15	0.	SLV5-NL	NonStatic	Min	-418.266	138.028	1.659E-14	0.
15	0.25635	SLV5-NL	NonStatic	Min	-417.514	132.036	1.586E-14	0.
15	0.5127	SLV5-NL	NonStatic	Min	-416.762	126.045	1.512E-14	0.
15	0.	SLV6-NL	NonStatic	Max	-394.565	145.431	1.748E-14	0.
15	0.25635	SLV6-NL	NonStatic	Max	-393.493	139.489	1.675E-14	0.

Table: Element Forces - Frames, Part 1 of 2

Frame	Station	OutputCase	CaseType	StepType	P	V2	V3	T
	m				KN	KN	KN	KN-m
15	0.5127	SLV6-NL	NonStatic	Max	-392.421	133.547	1.603E-14	0.
15	0.	SLV6-NL	NonStatic	Min	-394.565	145.431	1.748E-14	0.
15	0.25635	SLV6-NL	NonStatic	Min	-393.493	139.489	1.675E-14	0.
15	0.5127	SLV6-NL	NonStatic	Min	-392.421	133.547	1.603E-14	0.
15	0.	SLV7-NL	NonStatic	Max	-412.669	137.306	1.650E-14	0.
15	0.25635	SLV7-NL	NonStatic	Max	-411.999	131.848	1.584E-14	0.
15	0.5127	SLV7-NL	NonStatic	Max	-411.328	126.391	1.517E-14	0.
15	0.	SLV7-NL	NonStatic	Min	-412.669	137.306	1.650E-14	0.
15	0.25635	SLV7-NL	NonStatic	Min	-411.999	131.848	1.584E-14	0.
15	0.5127	SLV7-NL	NonStatic	Min	-411.328	126.391	1.517E-14	0.
15	0.	SLV8-NL	NonStatic	Max	-388.957	144.648	1.739E-14	0.
15	0.25635	SLV8-NL	NonStatic	Max	-387.967	139.239	1.672E-14	0.
15	0.5127	SLV8-NL	NonStatic	Max	-386.976	133.83	1.606E-14	0.
15	0.	SLV8-NL	NonStatic	Min	-388.957	144.648	1.739E-14	0.
15	0.25635	SLV8-NL	NonStatic	Min	-387.967	139.239	1.672E-14	0.
15	0.5127	SLV8-NL	NonStatic	Min	-386.976	133.83	1.606E-14	0.
15	0.	SLV9-NL	NonStatic	Max	-439.886	127.256	1.530E-14	0.
15	0.25635	SLV9-NL	NonStatic	Max	-438.494	121.718	1.462E-14	0.
15	0.5127	SLV9-NL	NonStatic	Max	-437.101	116.179	1.394E-14	0.
15	0.	SLV9-NL	NonStatic	Min	-439.886	127.256	1.530E-14	0.
15	0.25635	SLV9-NL	NonStatic	Min	-438.494	121.718	1.462E-14	0.
15	0.5127	SLV9-NL	NonStatic	Min	-437.101	116.179	1.394E-14	0.
15	0.	SLV10-NL	NonStatic	Max	-368.92	149.686	1.799E-14	0.
15	0.25635	SLV10-NL	NonStatic	Max	-368.595	143.985	1.729E-14	0.
15	0.5127	SLV10-NL	NonStatic	Max	-368.269	138.283	1.660E-14	0.
15	0.	SLV10-NL	NonStatic	Min	-368.92	149.686	1.799E-14	0.
15	0.25635	SLV10-NL	NonStatic	Min	-368.595	143.985	1.729E-14	0.
15	0.5127	SLV10-NL	NonStatic	Min	-368.269	138.283	1.660E-14	0.
15	0.	SLV11-NL	NonStatic	Max	-443.206	132.132	1.588E-14	0.
15	0.25635	SLV11-NL	NonStatic	Max	-441.789	126.434	1.519E-14	0.
15	0.5127	SLV11-NL	NonStatic	Max	-440.372	120.735	1.449E-14	0.
15	0.	SLV11-NL	NonStatic	Min	-443.206	132.132	1.588E-14	0.
15	0.25635	SLV11-NL	NonStatic	Min	-441.789	126.434	1.519E-14	0.
15	0.5127	SLV11-NL	NonStatic	Min	-440.372	120.735	1.449E-14	0.
15	0.	SLV12-NL	NonStatic	Max	-372.225	154.483	1.857E-14	0.
15	0.25635	SLV12-NL	NonStatic	Max	-371.875	148.622	1.785E-14	0.
15	0.5127	SLV12-NL	NonStatic	Max	-371.525	142.76	1.713E-14	0.
15	0.	SLV12-NL	NonStatic	Min	-372.225	154.483	1.857E-14	0.
15	0.25635	SLV12-NL	NonStatic	Min	-371.875	148.622	1.785E-14	0.
15	0.5127	SLV12-NL	NonStatic	Min	-371.525	142.76	1.713E-14	0.
15	0.	SLV13-NL	NonStatic	Max	-396.756	132.076	1.588E-14	0.
15	0.25635	SLV13-NL	NonStatic	Max	-395.766	126.667	1.521E-14	0.
15	0.5127	SLV13-NL	NonStatic	Max	-394.775	121.258	1.455E-14	0.
15	0.	SLV13-NL	NonStatic	Min	-396.756	132.076	1.588E-14	0.
15	0.25635	SLV13-NL	NonStatic	Min	-395.766	126.667	1.521E-14	0.
15	0.5127	SLV13-NL	NonStatic	Min	-394.775	121.258	1.455E-14	0.
15	0.	SLV14-NL	NonStatic	Max	-375.85	137.996	1.659E-14	0.
15	0.25635	SLV14-NL	NonStatic	Max	-375.18	132.538	1.592E-14	0.
15	0.5127	SLV14-NL	NonStatic	Max	-374.509	127.08	1.525E-14	0.
15	0.	SLV14-NL	NonStatic	Min	-375.85	137.996	1.659E-14	0.
15	0.25635	SLV14-NL	NonStatic	Min	-375.18	132.538	1.592E-14	0.
15	0.5127	SLV14-NL	NonStatic	Min	-374.509	127.08	1.525E-14	0.
15	0.	SLV15-NL	NonStatic	Max	-408.84	148.161	1.781E-14	0.
15	0.25635	SLV15-NL	NonStatic	Max	-407.768	142.219	1.708E-14	0.

Table: Element Forces - Frames, Part 1 of 2

Frame	Station	OutputCase	CaseType	StepType	P	V2	V3	T
	m				KN	KN	KN	KN-m
15	0.5127	SLV15-NL	NonStatic	Max	-406.696	136.277	1.635E-14	0.
15	0.	SLV15-NL	NonStatic	Min	-408.84	148.161	1.781E-14	0.
15	0.25635	SLV15-NL	NonStatic	Min	-407.768	142.219	1.708E-14	0.
15	0.5127	SLV15-NL	NonStatic	Min	-406.696	136.277	1.635E-14	0.
15	0.	SLV16-NL	NonStatic	Max	-388.131	153.857	1.849E-14	0.
15	0.25635	SLV16-NL	NonStatic	Max	-387.378	147.865	1.776E-14	0.
15	0.5127	SLV16-NL	NonStatic	Max	-386.626	141.874	1.703E-14	0.
15	0.	SLV16-NL	NonStatic	Min	-388.131	153.857	1.849E-14	0.
15	0.25635	SLV16-NL	NonStatic	Min	-387.378	147.865	1.776E-14	0.
15	0.5127	SLV16-NL	NonStatic	Min	-386.626	141.874	1.703E-14	0.
16	0.	SLU 1-NL	NonStatic	Max	-571.885	289.805	3.482E-14	0.
16	0.25635	SLU 1-NL	NonStatic	Max	-570.304	282.477	3.393E-14	0.
16	0.5127	SLU 1-NL	NonStatic	Max	-568.724	275.15	3.303E-14	0.
16	0.	SLU 1-NL	NonStatic	Min	-571.885	289.805	3.482E-14	0.
16	0.25635	SLU 1-NL	NonStatic	Min	-570.304	282.477	3.393E-14	0.
16	0.5127	SLU 1-NL	NonStatic	Min	-568.724	275.15	3.303E-14	0.
16	0.	SLU 2-NL	NonStatic	Max	-456.725	313.893	3.772E-14	0.
16	0.25635	SLU 2-NL	NonStatic	Max	-455.145	306.566	3.682E-14	0.
16	0.5127	SLU 2-NL	NonStatic	Max	-453.565	299.238	3.592E-14	0.
16	0.	SLU 2-NL	NonStatic	Min	-456.725	313.893	3.772E-14	0.
16	0.25635	SLU 2-NL	NonStatic	Min	-455.145	306.566	3.682E-14	0.
16	0.5127	SLU 2-NL	NonStatic	Min	-453.565	299.238	3.592E-14	0.
16	0.	SLU 3-NL	NonStatic	Max	-507.132	167.253	2.010E-14	0.
16	0.25635	SLU 3-NL	NonStatic	Max	-505.917	161.617	1.941E-14	0.
16	0.5127	SLU 3-NL	NonStatic	Max	-504.701	155.98	1.872E-14	0.
16	0.	SLU 3-NL	NonStatic	Min	-507.132	167.253	2.010E-14	0.
16	0.25635	SLU 3-NL	NonStatic	Min	-505.917	161.617	1.941E-14	0.
16	0.5127	SLU 3-NL	NonStatic	Min	-504.701	155.98	1.872E-14	0.
16	0.	SLU 4-NL	NonStatic	Max	-561.25	285.131	3.426E-14	0.
16	0.25635	SLU 4-NL	NonStatic	Max	-559.67	277.804	3.337E-14	0.
16	0.5127	SLU 4-NL	NonStatic	Max	-558.09	270.476	3.247E-14	0.
16	0.	SLU 4-NL	NonStatic	Min	-561.25	285.131	3.426E-14	0.
16	0.25635	SLU 4-NL	NonStatic	Min	-559.67	277.804	3.337E-14	0.
16	0.5127	SLU 4-NL	NonStatic	Min	-558.09	270.476	3.247E-14	0.
16	0.	SLU 5-NL	NonStatic	Max	-504.956	160.238	1.926E-14	0.
16	0.25635	SLU 5-NL	NonStatic	Max	-503.741	154.601	1.857E-14	0.
16	0.5127	SLU 5-NL	NonStatic	Max	-502.526	148.965	1.788E-14	0.
16	0.	SLU 5-NL	NonStatic	Min	-504.956	160.238	1.926E-14	0.
16	0.25635	SLU 5-NL	NonStatic	Min	-503.741	154.601	1.857E-14	0.
16	0.5127	SLU 5-NL	NonStatic	Min	-502.526	148.965	1.788E-14	0.
16	0.	SLU 6-NL	NonStatic	Max	-565.807	297.995	3.581E-14	0.
16	0.25635	SLU 6-NL	NonStatic	Max	-564.227	290.667	3.491E-14	0.
16	0.5127	SLU 6-NL	NonStatic	Max	-562.647	283.34	3.401E-14	0.
16	0.	SLU 6-NL	NonStatic	Min	-565.807	297.995	3.581E-14	0.
16	0.25635	SLU 6-NL	NonStatic	Min	-564.227	290.667	3.491E-14	0.
16	0.5127	SLU 6-NL	NonStatic	Min	-562.647	283.34	3.401E-14	0.
16	0.	SLU 7-NL	NonStatic	Max	-509.898	174.176	2.093E-14	0.
16	0.25635	SLU 7-NL	NonStatic	Max	-508.683	168.539	2.024E-14	0.
16	0.5127	SLU 7-NL	NonStatic	Max	-507.467	162.903	1.955E-14	0.
16	0.	SLU 7-NL	NonStatic	Min	-509.898	174.176	2.093E-14	0.
16	0.25635	SLU 7-NL	NonStatic	Min	-508.683	168.539	2.024E-14	0.
16	0.5127	SLU 7-NL	NonStatic	Min	-507.467	162.903	1.955E-14	0.
16	0.	SLE-C-NL	NonStatic	Max	-433.569	218.704	2.628E-14	0.
16	0.25635	SLE-C-NL	NonStatic	Max	-432.354	213.068	2.559E-14	0.

Table: Element Forces - Frames, Part 1 of 2

Frame	Station	OutputCase	CaseType	StepType	P	V2	V3	T
	m				KN	KN	KN	KN-m
16	0.5127	SLE-C-NL	NonStatic	Max	-431.138	207.431	2.490E-14	0.
16	0.	SLE-C-NL	NonStatic	Min	-433.569	218.704	2.628E-14	0.
16	0.25635	SLE-C-NL	NonStatic	Min	-432.354	213.068	2.559E-14	0.
16	0.5127	SLE-C-NL	NonStatic	Min	-431.138	207.431	2.490E-14	0.
16	0.	SLE-F-1-NL	NonStatic	Max	-402.38	218.007	2.620E-14	0.
16	0.25635	SLE-F-1-NL	NonStatic	Max	-401.165	212.37	2.551E-14	0.
16	0.5127	SLE-F-1-NL	NonStatic	Max	-399.949	206.733	2.482E-14	0.
16	0.	SLE-F-1-NL	NonStatic	Min	-402.38	218.007	2.620E-14	0.
16	0.25635	SLE-F-1-NL	NonStatic	Min	-401.165	212.37	2.551E-14	0.
16	0.5127	SLE-F-1-NL	NonStatic	Min	-399.949	206.733	2.482E-14	0.
16	0.	SLE-F-2-NL	NonStatic	Max	-409.928	185.272	2.227E-14	0.
16	0.25635	SLE-F-2-NL	NonStatic	Max	-408.712	179.635	2.158E-14	0.
16	0.5127	SLE-F-2-NL	NonStatic	Max	-407.497	173.999	2.089E-14	0.
16	0.	SLE-F-2-NL	NonStatic	Min	-409.928	185.272	2.227E-14	0.
16	0.25635	SLE-F-2-NL	NonStatic	Min	-408.712	179.635	2.158E-14	0.
16	0.5127	SLE-F-2-NL	NonStatic	Min	-407.497	173.999	2.089E-14	0.
16	0.	SLE-F-3-NL	NonStatic	Max	-411.304	189.631	2.279E-14	0.
16	0.25635	SLE-F-3-NL	NonStatic	Max	-410.088	183.995	2.210E-14	0.
16	0.5127	SLE-F-3-NL	NonStatic	Max	-408.873	178.358	2.141E-14	0.
16	0.	SLE-F-3-NL	NonStatic	Min	-411.304	189.631	2.279E-14	0.
16	0.25635	SLE-F-3-NL	NonStatic	Min	-410.088	183.995	2.210E-14	0.
16	0.5127	SLE-F-3-NL	NonStatic	Min	-408.873	178.358	2.141E-14	0.
16	0.	SLE-QP-NL	NonStatic	Max	-391.986	191.339	2.299E-14	0.
16	0.25635	SLE-QP-NL	NonStatic	Max	-390.771	185.702	2.230E-14	0.
16	0.5127	SLE-QP-NL	NonStatic	Max	-389.555	180.066	2.161E-14	0.
16	0.	SLE-QP-NL	NonStatic	Min	-391.986	191.339	2.299E-14	0.
16	0.25635	SLE-QP-NL	NonStatic	Min	-390.771	185.702	2.230E-14	0.
16	0.5127	SLE-QP-NL	NonStatic	Min	-389.555	180.066	2.161E-14	0.
16	0.	SLV1-NL	NonStatic	Max	-494.199	172.623	2.075E-14	0.
16	0.25635	SLV1-NL	NonStatic	Max	-493.494	166.794	2.003E-14	0.
16	0.5127	SLV1-NL	NonStatic	Max	-492.789	160.964	1.932E-14	0.
16	0.	SLV1-NL	NonStatic	Min	-494.199	172.623	2.075E-14	0.
16	0.25635	SLV1-NL	NonStatic	Min	-493.494	166.794	2.003E-14	0.
16	0.5127	SLV1-NL	NonStatic	Min	-492.789	160.964	1.932E-14	0.
16	0.	SLV2-NL	NonStatic	Max	-415.213	198.626	2.387E-14	0.
16	0.25635	SLV2-NL	NonStatic	Max	-413.453	193.024	2.318E-14	0.
16	0.5127	SLV2-NL	NonStatic	Max	-411.692	187.422	2.250E-14	0.
16	0.	SLV2-NL	NonStatic	Min	-415.213	198.626	2.387E-14	0.
16	0.25635	SLV2-NL	NonStatic	Min	-413.453	193.024	2.318E-14	0.
16	0.5127	SLV2-NL	NonStatic	Min	-411.692	187.422	2.250E-14	0.
16	0.	SLV3-NL	NonStatic	Max	-492.565	172.379	2.072E-14	0.
16	0.25635	SLV3-NL	NonStatic	Max	-491.894	166.708	2.002E-14	0.
16	0.5127	SLV3-NL	NonStatic	Max	-491.223	161.037	1.933E-14	0.
16	0.	SLV3-NL	NonStatic	Min	-492.565	172.379	2.072E-14	0.
16	0.25635	SLV3-NL	NonStatic	Min	-491.894	166.708	2.002E-14	0.
16	0.5127	SLV3-NL	NonStatic	Min	-491.223	161.037	1.933E-14	0.
16	0.	SLV4-NL	NonStatic	Max	-413.574	198.367	2.384E-14	0.
16	0.25635	SLV4-NL	NonStatic	Max	-411.848	192.923	2.317E-14	0.
16	0.5127	SLV4-NL	NonStatic	Max	-410.122	187.479	2.251E-14	0.
16	0.	SLV4-NL	NonStatic	Min	-413.574	198.367	2.384E-14	0.
16	0.25635	SLV4-NL	NonStatic	Min	-411.848	192.923	2.317E-14	0.
16	0.5127	SLV4-NL	NonStatic	Min	-410.122	187.479	2.251E-14	0.
16	0.	SLV5-NL	NonStatic	Max	-426.414	191.215	2.298E-14	0.
16	0.25635	SLV5-NL	NonStatic	Max	-425.3	185.28	2.225E-14	0.

Table: Element Forces - Frames, Part 1 of 2

Frame	Station	OutputCase	CaseType	StepType	P	V2	V3	T
	m				KN	KN	KN	KN-m
16	0.5127	SLV5-NL	NonStatic	Max	-424.186	179.346	2.153E-14	0.
16	0.	SLV5-NL	NonStatic	Min	-426.414	191.215	2.298E-14	0.
16	0.25635	SLV5-NL	NonStatic	Min	-425.3	185.28	2.225E-14	0.
16	0.5127	SLV5-NL	NonStatic	Min	-424.186	179.346	2.153E-14	0.
16	0.	SLV6-NL	NonStatic	Max	-402.519	198.402	2.384E-14	0.
16	0.25635	SLV6-NL	NonStatic	Max	-401.088	192.535	2.312E-14	0.
16	0.5127	SLV6-NL	NonStatic	Max	-399.657	186.669	2.241E-14	0.
16	0.	SLV6-NL	NonStatic	Min	-402.519	198.402	2.384E-14	0.
16	0.25635	SLV6-NL	NonStatic	Min	-401.088	192.535	2.312E-14	0.
16	0.5127	SLV6-NL	NonStatic	Min	-399.657	186.669	2.241E-14	0.
16	0.	SLV7-NL	NonStatic	Max	-420.966	190.4	2.288E-14	0.
16	0.25635	SLV7-NL	NonStatic	Max	-419.965	184.993	2.222E-14	0.
16	0.5127	SLV7-NL	NonStatic	Max	-418.965	179.586	2.156E-14	0.
16	0.	SLV7-NL	NonStatic	Min	-420.966	190.4	2.288E-14	0.
16	0.25635	SLV7-NL	NonStatic	Min	-419.965	184.993	2.222E-14	0.
16	0.5127	SLV7-NL	NonStatic	Min	-418.965	179.586	2.156E-14	0.
16	0.	SLV8-NL	NonStatic	Max	-397.056	197.539	2.374E-14	0.
16	0.25635	SLV8-NL	NonStatic	Max	-395.739	192.2	2.308E-14	0.
16	0.5127	SLV8-NL	NonStatic	Max	-394.422	186.862	2.243E-14	0.
16	0.	SLV8-NL	NonStatic	Min	-397.056	197.539	2.374E-14	0.
16	0.25635	SLV8-NL	NonStatic	Min	-395.739	192.2	2.308E-14	0.
16	0.5127	SLV8-NL	NonStatic	Min	-394.422	186.862	2.243E-14	0.
16	0.	SLV9-NL	NonStatic	Max	-446.076	178.667	2.147E-14	0.
16	0.25635	SLV9-NL	NonStatic	Max	-444.35	173.223	2.081E-14	0.
16	0.5127	SLV9-NL	NonStatic	Max	-442.624	167.779	2.014E-14	0.
16	0.	SLV9-NL	NonStatic	Min	-446.076	178.667	2.147E-14	0.
16	0.25635	SLV9-NL	NonStatic	Min	-444.35	173.223	2.081E-14	0.
16	0.5127	SLV9-NL	NonStatic	Min	-442.624	167.779	2.014E-14	0.
16	0.	SLV10-NL	NonStatic	Max	-378.624	202.271	2.431E-14	0.
16	0.25635	SLV10-NL	NonStatic	Max	-377.953	196.599	2.361E-14	0.
16	0.5127	SLV10-NL	NonStatic	Max	-377.282	190.928	2.292E-14	0.
16	0.	SLV10-NL	NonStatic	Min	-378.624	202.271	2.431E-14	0.
16	0.25635	SLV10-NL	NonStatic	Min	-377.953	196.599	2.361E-14	0.
16	0.5127	SLV10-NL	NonStatic	Min	-377.282	190.928	2.292E-14	0.
16	0.	SLV11-NL	NonStatic	Max	-449.69	185.37	2.228E-14	0.
16	0.25635	SLV11-NL	NonStatic	Max	-447.93	179.769	2.159E-14	0.
16	0.5127	SLV11-NL	NonStatic	Max	-446.17	174.167	2.091E-14	0.
16	0.	SLV11-NL	NonStatic	Min	-449.69	185.37	2.228E-14	0.
16	0.25635	SLV11-NL	NonStatic	Min	-447.93	179.769	2.159E-14	0.
16	0.5127	SLV11-NL	NonStatic	Min	-446.17	174.167	2.091E-14	0.
16	0.	SLV12-NL	NonStatic	Max	-382.217	208.917	2.511E-14	0.
16	0.25635	SLV12-NL	NonStatic	Max	-381.512	203.088	2.439E-14	0.
16	0.5127	SLV12-NL	NonStatic	Max	-380.808	197.258	2.368E-14	0.
16	0.	SLV12-NL	NonStatic	Min	-382.217	208.917	2.511E-14	0.
16	0.25635	SLV12-NL	NonStatic	Min	-381.512	203.088	2.439E-14	0.
16	0.5127	SLV12-NL	NonStatic	Min	-380.808	197.258	2.368E-14	0.
16	0.	SLV13-NL	NonStatic	Max	-404.017	182.484	2.193E-14	0.
16	0.25635	SLV13-NL	NonStatic	Max	-402.7	177.146	2.128E-14	0.
16	0.5127	SLV13-NL	NonStatic	Max	-401.383	171.807	2.062E-14	0.
16	0.	SLV13-NL	NonStatic	Min	-404.017	182.484	2.193E-14	0.
16	0.25635	SLV13-NL	NonStatic	Min	-402.7	177.146	2.128E-14	0.
16	0.5127	SLV13-NL	NonStatic	Min	-401.383	171.807	2.062E-14	0.
16	0.	SLV14-NL	NonStatic	Max	-384.12	188.92	2.270E-14	0.
16	0.25635	SLV14-NL	NonStatic	Max	-383.12	183.513	2.204E-14	0.

Table: Element Forces - Frames, Part 1 of 2

Frame	Station	OutputCase	CaseType	StepType	P	V2	V3	T
	m				KN	KN	KN	KN-m
16	0.5127	SLV14-NL	NonStatic	Max	-382.119	178.106	2.138E-14	0.
16	0.	SLV14-NL	NonStatic	Min	-384.12	188.92	2.270E-14	0.
16	0.25635	SLV14-NL	NonStatic	Min	-383.12	183.513	2.204E-14	0.
16	0.5127	SLV14-NL	NonStatic	Min	-382.119	178.106	2.138E-14	0.
16	0.	SLV15-NL	NonStatic	Max	-417.068	204.613	2.459E-14	0.
16	0.25635	SLV15-NL	NonStatic	Max	-415.637	198.747	2.387E-14	0.
16	0.5127	SLV15-NL	NonStatic	Max	-414.207	192.881	2.315E-14	0.
16	0.	SLV15-NL	NonStatic	Min	-417.068	204.613	2.459E-14	0.
16	0.25635	SLV15-NL	NonStatic	Min	-415.637	198.747	2.387E-14	0.
16	0.5127	SLV15-NL	NonStatic	Min	-414.207	192.881	2.315E-14	0.
16	0.	SLV16-NL	NonStatic	Max	-397.355	210.852	2.534E-14	0.
16	0.25635	SLV16-NL	NonStatic	Max	-396.241	204.917	2.461E-14	0.
16	0.5127	SLV16-NL	NonStatic	Max	-395.127	198.983	2.389E-14	0.
16	0.	SLV16-NL	NonStatic	Min	-397.355	210.852	2.534E-14	0.
16	0.25635	SLV16-NL	NonStatic	Min	-396.241	204.917	2.461E-14	0.
16	0.5127	SLV16-NL	NonStatic	Min	-395.127	198.983	2.389E-14	0.
17	0.	SLU 1-NL	NonStatic	Max	-588.274	367.338	4.414E-14	0.
17	0.25635	SLU 1-NL	NonStatic	Max	-586.252	360.12	4.325E-14	0.
17	0.5127	SLU 1-NL	NonStatic	Max	-584.23	352.901	4.237E-14	0.
17	0.	SLU 1-NL	NonStatic	Min	-588.274	367.338	4.414E-14	0.
17	0.25635	SLU 1-NL	NonStatic	Min	-586.252	360.12	4.325E-14	0.
17	0.5127	SLU 1-NL	NonStatic	Min	-584.23	352.901	4.237E-14	0.
17	0.	SLU 2-NL	NonStatic	Max	-474.79	398.331	4.786E-14	0.
17	0.25635	SLU 2-NL	NonStatic	Max	-472.768	391.113	4.698E-14	0.
17	0.5127	SLU 2-NL	NonStatic	Max	-470.747	383.895	4.609E-14	0.
17	0.	SLU 2-NL	NonStatic	Min	-474.79	398.331	4.786E-14	0.
17	0.25635	SLU 2-NL	NonStatic	Min	-472.768	391.113	4.698E-14	0.
17	0.5127	SLU 2-NL	NonStatic	Min	-470.747	383.895	4.609E-14	0.
17	0.	SLU 3-NL	NonStatic	Max	-515.875	211.313	2.539E-14	0.
17	0.25635	SLU 3-NL	NonStatic	Max	-514.32	205.76	2.471E-14	0.
17	0.5127	SLU 3-NL	NonStatic	Max	-512.765	200.208	2.403E-14	0.
17	0.	SLU 3-NL	NonStatic	Min	-515.875	211.313	2.539E-14	0.
17	0.25635	SLU 3-NL	NonStatic	Min	-514.32	205.76	2.471E-14	0.
17	0.5127	SLU 3-NL	NonStatic	Min	-512.765	200.208	2.403E-14	0.
17	0.	SLU 4-NL	NonStatic	Max	-577.503	367.437	4.415E-14	0.
17	0.25635	SLU 4-NL	NonStatic	Max	-575.481	360.219	4.326E-14	0.
17	0.5127	SLU 4-NL	NonStatic	Max	-573.459	353.001	4.238E-14	0.
17	0.	SLU 4-NL	NonStatic	Min	-577.503	367.437	4.415E-14	0.
17	0.25635	SLU 4-NL	NonStatic	Min	-575.481	360.219	4.326E-14	0.
17	0.5127	SLU 4-NL	NonStatic	Min	-573.459	353.001	4.238E-14	0.
17	0.	SLU 5-NL	NonStatic	Max	-513.408	208.84	2.510E-14	0.
17	0.25635	SLU 5-NL	NonStatic	Max	-511.853	203.288	2.442E-14	0.
17	0.5127	SLU 5-NL	NonStatic	Max	-510.298	197.735	2.374E-14	0.
17	0.	SLU 5-NL	NonStatic	Min	-513.408	208.84	2.510E-14	0.
17	0.25635	SLU 5-NL	NonStatic	Min	-511.853	203.288	2.442E-14	0.
17	0.5127	SLU 5-NL	NonStatic	Min	-510.298	197.735	2.374E-14	0.
17	0.	SLU 6-NL	NonStatic	Max	-582.577	371.756	4.467E-14	0.
17	0.25635	SLU 6-NL	NonStatic	Max	-580.556	364.538	4.378E-14	0.
17	0.5127	SLU 6-NL	NonStatic	Max	-578.534	357.32	4.290E-14	0.
17	0.	SLU 6-NL	NonStatic	Min	-582.577	371.756	4.467E-14	0.
17	0.25635	SLU 6-NL	NonStatic	Min	-580.556	364.538	4.378E-14	0.
17	0.5127	SLU 6-NL	NonStatic	Min	-578.534	357.32	4.290E-14	0.
17	0.	SLU 7-NL	NonStatic	Max	-518.925	213.657	2.568E-14	0.
17	0.25635	SLU 7-NL	NonStatic	Max	-517.37	208.105	2.500E-14	0.

Table: Element Forces - Frames, Part 1 of 2

Frame	Station	OutputCase	CaseType	StepType	P	V2	V3	T
	m				KN	KN	KN	KN-m
17	0.5127	SLU 7-NL	NonStatic	Max	-515.815	202.552	2.432E-14	0.
17	0.	SLU 7-NL	NonStatic	Min	-518.925	213.657	2.568E-14	0.
17	0.25635	SLU 7-NL	NonStatic	Min	-517.37	208.105	2.500E-14	0.
17	0.5127	SLU 7-NL	NonStatic	Min	-515.815	202.552	2.432E-14	0.
17	0.	SLE-C-NL	NonStatic	Max	-445.88	277.186	3.331E-14	0.
17	0.25635	SLE-C-NL	NonStatic	Max	-444.325	271.633	3.263E-14	0.
17	0.5127	SLE-C-NL	NonStatic	Max	-442.77	266.081	3.195E-14	0.
17	0.	SLE-C-NL	NonStatic	Min	-445.88	277.186	3.331E-14	0.
17	0.25635	SLE-C-NL	NonStatic	Min	-444.325	271.633	3.263E-14	0.
17	0.5127	SLE-C-NL	NonStatic	Min	-442.77	266.081	3.195E-14	0.
17	0.	SLE-F-1-NL	NonStatic	Max	-414.645	276.356	3.321E-14	0.
17	0.25635	SLE-F-1-NL	NonStatic	Max	-413.09	270.803	3.253E-14	0.
17	0.5127	SLE-F-1-NL	NonStatic	Max	-411.535	265.251	3.185E-14	0.
17	0.	SLE-F-1-NL	NonStatic	Min	-414.645	276.356	3.321E-14	0.
17	0.25635	SLE-F-1-NL	NonStatic	Min	-413.09	270.803	3.253E-14	0.
17	0.5127	SLE-F-1-NL	NonStatic	Min	-411.535	265.251	3.185E-14	0.
17	0.	SLE-F-2-NL	NonStatic	Max	-419.979	236.224	2.839E-14	0.
17	0.25635	SLE-F-2-NL	NonStatic	Max	-418.424	230.671	2.771E-14	0.
17	0.5127	SLE-F-2-NL	NonStatic	Max	-416.869	225.119	2.703E-14	0.
17	0.	SLE-F-2-NL	NonStatic	Min	-419.979	236.224	2.839E-14	0.
17	0.25635	SLE-F-2-NL	NonStatic	Min	-418.424	230.671	2.771E-14	0.
17	0.5127	SLE-F-2-NL	NonStatic	Min	-416.869	225.119	2.703E-14	0.
17	0.	SLE-F-3-NL	NonStatic	Max	-421.546	238.374	2.864E-14	0.
17	0.25635	SLE-F-3-NL	NonStatic	Max	-419.99	232.822	2.796E-14	0.
17	0.5127	SLE-F-3-NL	NonStatic	Max	-418.435	227.269	2.728E-14	0.
17	0.	SLE-F-3-NL	NonStatic	Min	-421.546	238.374	2.864E-14	0.
17	0.25635	SLE-F-3-NL	NonStatic	Min	-419.99	232.822	2.796E-14	0.
17	0.5127	SLE-F-3-NL	NonStatic	Min	-418.435	227.269	2.728E-14	0.
17	0.	SLE-QP-NL	NonStatic	Max	-402.403	242.303	2.912E-14	0.
17	0.25635	SLE-QP-NL	NonStatic	Max	-400.848	236.751	2.844E-14	0.
17	0.5127	SLE-QP-NL	NonStatic	Max	-399.293	231.198	2.776E-14	0.
17	0.	SLE-QP-NL	NonStatic	Min	-402.403	242.303	2.912E-14	0.
17	0.25635	SLE-QP-NL	NonStatic	Min	-400.848	236.751	2.844E-14	0.
17	0.5127	SLE-QP-NL	NonStatic	Min	-399.293	231.198	2.776E-14	0.
17	0.	SLV1-NL	NonStatic	Max	-504.49	223.647	2.688E-14	0.
17	0.25635	SLV1-NL	NonStatic	Max	-503.433	217.871	2.617E-14	0.
17	0.5127	SLV1-NL	NonStatic	Max	-502.375	212.095	2.546E-14	0.
17	0.	SLV1-NL	NonStatic	Min	-504.49	223.647	2.688E-14	0.
17	0.25635	SLV1-NL	NonStatic	Min	-503.433	217.871	2.617E-14	0.
17	0.5127	SLV1-NL	NonStatic	Min	-502.375	212.095	2.546E-14	0.
17	0.	SLV2-NL	NonStatic	Max	-424.884	246.232	2.959E-14	0.
17	0.25635	SLV2-NL	NonStatic	Max	-422.788	240.748	2.892E-14	0.
17	0.5127	SLV2-NL	NonStatic	Max	-420.691	235.263	2.824E-14	0.
17	0.	SLV2-NL	NonStatic	Min	-424.884	246.232	2.959E-14	0.
17	0.25635	SLV2-NL	NonStatic	Min	-422.788	240.748	2.892E-14	0.
17	0.5127	SLV2-NL	NonStatic	Min	-420.691	235.263	2.824E-14	0.
17	0.	SLV3-NL	NonStatic	Max	-502.918	223.374	2.684E-14	0.
17	0.25635	SLV3-NL	NonStatic	Max	-501.904	217.754	2.615E-14	0.
17	0.5127	SLV3-NL	NonStatic	Max	-500.89	212.134	2.547E-14	0.
17	0.	SLV3-NL	NonStatic	Min	-502.918	223.374	2.684E-14	0.
17	0.25635	SLV3-NL	NonStatic	Min	-501.904	217.754	2.615E-14	0.
17	0.5127	SLV3-NL	NonStatic	Min	-500.89	212.134	2.547E-14	0.
17	0.	SLV4-NL	NonStatic	Max	-423.307	245.949	2.955E-14	0.
17	0.25635	SLV4-NL	NonStatic	Max	-421.254	240.62	2.890E-14	0.

Table: Element Forces - Frames, Part 1 of 2

Frame	Station	OutputCase	CaseType	StepType	P	V2	V3	T
	m				KN	KN	KN	KN-m
17	0.5127	SLV4-NL	NonStatic	Max	-419.201	235.291	2.825E-14	0.
17	0.	SLV4-NL	NonStatic	Min	-423.307	245.949	2.955E-14	0.
17	0.25635	SLV4-NL	NonStatic	Min	-421.254	240.62	2.890E-14	0.
17	0.5127	SLV4-NL	NonStatic	Min	-419.201	235.291	2.825E-14	0.
17	0.	SLV5-NL	NonStatic	Max	-437.047	243.418	2.925E-14	0.
17	0.25635	SLV5-NL	NonStatic	Max	-435.575	237.562	2.853E-14	0.
17	0.5127	SLV5-NL	NonStatic	Max	-434.103	231.706	2.782E-14	0.
17	0.	SLV5-NL	NonStatic	Min	-437.047	243.418	2.925E-14	0.
17	0.25635	SLV5-NL	NonStatic	Min	-435.575	237.562	2.853E-14	0.
17	0.5127	SLV5-NL	NonStatic	Min	-434.103	231.706	2.782E-14	0.
17	0.	SLV6-NL	NonStatic	Max	-412.936	249.879	3.003E-14	0.
17	0.25635	SLV6-NL	NonStatic	Max	-411.152	244.11	2.932E-14	0.
17	0.5127	SLV6-NL	NonStatic	Max	-409.369	238.342	2.861E-14	0.
17	0.	SLV6-NL	NonStatic	Min	-412.936	249.879	3.003E-14	0.
17	0.25635	SLV6-NL	NonStatic	Min	-411.152	244.11	2.932E-14	0.
17	0.5127	SLV6-NL	NonStatic	Min	-409.369	238.342	2.861E-14	0.
17	0.	SLV7-NL	NonStatic	Max	-431.805	242.505	2.914E-14	0.
17	0.25635	SLV7-NL	NonStatic	Max	-430.479	237.169	2.849E-14	0.
17	0.5127	SLV7-NL	NonStatic	Max	-429.152	231.833	2.783E-14	0.
17	0.	SLV7-NL	NonStatic	Min	-431.805	242.505	2.914E-14	0.
17	0.25635	SLV7-NL	NonStatic	Min	-430.479	237.169	2.849E-14	0.
17	0.5127	SLV7-NL	NonStatic	Min	-429.152	231.833	2.783E-14	0.
17	0.	SLV8-NL	NonStatic	Max	-407.678	248.937	2.991E-14	0.
17	0.25635	SLV8-NL	NonStatic	Max	-406.04	243.688	2.927E-14	0.
17	0.5127	SLV8-NL	NonStatic	Max	-404.402	238.439	2.863E-14	0.
17	0.	SLV8-NL	NonStatic	Min	-407.678	248.937	2.991E-14	0.
17	0.25635	SLV8-NL	NonStatic	Min	-406.04	243.688	2.927E-14	0.
17	0.5127	SLV8-NL	NonStatic	Min	-404.402	238.439	2.863E-14	0.
17	0.	SLV9-NL	NonStatic	Max	-454.712	229.425	2.757E-14	0.
17	0.25635	SLV9-NL	NonStatic	Max	-452.659	224.096	2.692E-14	0.
17	0.5127	SLV9-NL	NonStatic	Max	-450.606	218.767	2.626E-14	0.
17	0.	SLV9-NL	NonStatic	Min	-454.712	229.425	2.757E-14	0.
17	0.25635	SLV9-NL	NonStatic	Min	-452.659	224.096	2.692E-14	0.
17	0.5127	SLV9-NL	NonStatic	Min	-450.606	218.767	2.626E-14	0.
17	0.	SLV10-NL	NonStatic	Max	-390.782	253.076	3.041E-14	0.
17	0.25635	SLV10-NL	NonStatic	Max	-389.769	247.456	2.972E-14	0.
17	0.5127	SLV10-NL	NonStatic	Max	-388.755	241.836	2.903E-14	0.
17	0.	SLV10-NL	NonStatic	Min	-390.782	253.076	3.041E-14	0.
17	0.25635	SLV10-NL	NonStatic	Min	-389.769	247.456	2.972E-14	0.
17	0.5127	SLV10-NL	NonStatic	Min	-388.755	241.836	2.903E-14	0.
17	0.	SLV11-NL	NonStatic	Max	-458.711	237.921	2.859E-14	0.
17	0.25635	SLV11-NL	NonStatic	Max	-456.614	232.436	2.792E-14	0.
17	0.5127	SLV11-NL	NonStatic	Max	-454.517	226.951	2.725E-14	0.
17	0.	SLV11-NL	NonStatic	Min	-458.711	237.921	2.859E-14	0.
17	0.25635	SLV11-NL	NonStatic	Min	-456.614	232.436	2.792E-14	0.
17	0.5127	SLV11-NL	NonStatic	Min	-454.517	226.951	2.725E-14	0.
17	0.	SLV12-NL	NonStatic	Max	-394.758	261.543	3.143E-14	0.
17	0.25635	SLV12-NL	NonStatic	Max	-393.701	255.767	3.072E-14	0.
17	0.5127	SLV12-NL	NonStatic	Max	-392.644	249.991	3.001E-14	0.
17	0.	SLV12-NL	NonStatic	Min	-394.758	261.543	3.143E-14	0.
17	0.25635	SLV12-NL	NonStatic	Min	-393.701	255.767	3.072E-14	0.
17	0.5127	SLV12-NL	NonStatic	Min	-392.644	249.991	3.001E-14	0.
17	0.	SLV13-NL	NonStatic	Max	-413.663	231.845	2.786E-14	0.
17	0.25635	SLV13-NL	NonStatic	Max	-412.025	226.596	2.722E-14	0.

Table: Element Forces - Frames, Part 1 of 2

Frame	Station	OutputCase	CaseType	StepType	P	V2	V3	T
	m				KN	KN	KN	KN-m
17	0.5127	SLV13-NL	NonStatic	Max	-410.387	221.347	2.657E-14	0.
17	0.	SLV13-NL	NonStatic	Min	-413.663	231.845	2.786E-14	0.
17	0.25635	SLV13-NL	NonStatic	Min	-412.025	226.596	2.722E-14	0.
17	0.5127	SLV13-NL	NonStatic	Min	-410.387	221.347	2.657E-14	0.
17	0.	SLV14-NL	NonStatic	Max	-394.791	238.521	2.866E-14	0.
17	0.25635	SLV14-NL	NonStatic	Max	-393.464	233.185	2.801E-14	0.
17	0.5127	SLV14-NL	NonStatic	Max	-392.138	227.848	2.735E-14	0.
17	0.	SLV14-NL	NonStatic	Min	-394.791	238.521	2.866E-14	0.
17	0.25635	SLV14-NL	NonStatic	Min	-393.464	233.185	2.801E-14	0.
17	0.5127	SLV14-NL	NonStatic	Min	-392.138	227.848	2.735E-14	0.
17	0.	SLV15-NL	NonStatic	Max	-427.982	259.903	3.123E-14	0.
17	0.25635	SLV15-NL	NonStatic	Max	-426.198	254.134	3.052E-14	0.
17	0.5127	SLV15-NL	NonStatic	Max	-424.415	248.365	2.982E-14	0.
17	0.	SLV15-NL	NonStatic	Min	-427.982	259.903	3.123E-14	0.
17	0.25635	SLV15-NL	NonStatic	Min	-426.198	254.134	3.052E-14	0.
17	0.5127	SLV15-NL	NonStatic	Min	-424.415	248.365	2.982E-14	0.
17	0.	SLV16-NL	NonStatic	Max	-409.283	266.422	3.201E-14	0.
17	0.25635	SLV16-NL	NonStatic	Max	-407.811	260.566	3.130E-14	0.
17	0.5127	SLV16-NL	NonStatic	Max	-406.339	254.71	3.058E-14	0.
17	0.	SLV16-NL	NonStatic	Min	-409.283	266.422	3.201E-14	0.
17	0.25635	SLV16-NL	NonStatic	Min	-407.811	260.566	3.130E-14	0.
17	0.5127	SLV16-NL	NonStatic	Min	-406.339	254.71	3.058E-14	0.
18	0.	SLU 1-NL	NonStatic	Max	-608.427	442.452	5.316E-14	0.
18	0.25635	SLU 1-NL	NonStatic	Max	-605.971	435.37	5.229E-14	0.
18	0.5127	SLU 1-NL	NonStatic	Max	-603.516	428.288	5.142E-14	0.
18	0.	SLU 1-NL	NonStatic	Min	-608.427	442.452	5.316E-14	0.
18	0.25635	SLU 1-NL	NonStatic	Min	-605.971	435.37	5.229E-14	0.
18	0.5127	SLU 1-NL	NonStatic	Min	-603.516	428.288	5.142E-14	0.
18	0.	SLU 2-NL	NonStatic	Max	-497.039	480.357	5.771E-14	0.
18	0.25635	SLU 2-NL	NonStatic	Max	-494.583	473.275	5.684E-14	0.
18	0.5127	SLU 2-NL	NonStatic	Max	-492.128	466.193	5.598E-14	0.
18	0.	SLU 2-NL	NonStatic	Min	-497.039	480.357	5.771E-14	0.
18	0.25635	SLU 2-NL	NonStatic	Min	-494.583	473.275	5.684E-14	0.
18	0.5127	SLU 2-NL	NonStatic	Min	-492.128	466.193	5.598E-14	0.
18	0.	SLU 3-NL	NonStatic	Max	-526.574	253.777	3.049E-14	0.
18	0.25635	SLU 3-NL	NonStatic	Max	-524.685	248.329	2.983E-14	0.
18	0.5127	SLU 3-NL	NonStatic	Max	-522.796	242.881	2.916E-14	0.
18	0.	SLU 3-NL	NonStatic	Min	-526.574	253.777	3.049E-14	0.
18	0.25635	SLU 3-NL	NonStatic	Min	-524.685	248.329	2.983E-14	0.
18	0.5127	SLU 3-NL	NonStatic	Min	-522.796	242.881	2.916E-14	0.
18	0.	SLU 4-NL	NonStatic	Max	-597.841	448.347	5.387E-14	0.
18	0.25635	SLU 4-NL	NonStatic	Max	-595.386	441.265	5.300E-14	0.
18	0.5127	SLU 4-NL	NonStatic	Max	-592.93	434.183	5.213E-14	0.
18	0.	SLU 4-NL	NonStatic	Min	-597.841	448.347	5.387E-14	0.
18	0.25635	SLU 4-NL	NonStatic	Min	-595.386	441.265	5.300E-14	0.
18	0.5127	SLU 4-NL	NonStatic	Min	-592.93	434.183	5.213E-14	0.
18	0.	SLU 5-NL	NonStatic	Max	-524.126	256.938	3.087E-14	0.
18	0.25635	SLU 5-NL	NonStatic	Max	-522.237	251.49	3.021E-14	0.
18	0.5127	SLU 5-NL	NonStatic	Max	-520.348	246.042	2.954E-14	0.
18	0.	SLU 5-NL	NonStatic	Min	-524.126	256.938	3.087E-14	0.
18	0.25635	SLU 5-NL	NonStatic	Min	-522.237	251.49	3.021E-14	0.
18	0.5127	SLU 5-NL	NonStatic	Min	-520.348	246.042	2.954E-14	0.
18	0.	SLU 6-NL	NonStatic	Max	-602.852	442.072	5.311E-14	0.
18	0.25635	SLU 6-NL	NonStatic	Max	-600.396	434.99	5.225E-14	0.

Table: Element Forces - Frames, Part 1 of 2

Frame	Station	OutputCase	CaseType	StepType	P	V2	V3	T
	m				KN	KN	KN	KN-m
18	0.5127	SLU 6-NL	NonStatic	Max	-597.94	427.907	5.138E-14	0.
18	0.	SLU 6-NL	NonStatic	Min	-602.852	442.072	5.311E-14	0.
18	0.25635	SLU 6-NL	NonStatic	Min	-600.396	434.99	5.225E-14	0.
18	0.5127	SLU 6-NL	NonStatic	Min	-597.94	427.907	5.138E-14	0.
18	0.	SLU 7-NL	NonStatic	Max	-529.598	250.446	3.009E-14	0.
18	0.25635	SLU 7-NL	NonStatic	Max	-527.709	244.998	2.943E-14	0.
18	0.5127	SLU 7-NL	NonStatic	Max	-525.82	239.55	2.876E-14	0.
18	0.	SLU 7-NL	NonStatic	Min	-529.598	250.446	3.009E-14	0.
18	0.25635	SLU 7-NL	NonStatic	Min	-527.709	244.998	2.943E-14	0.
18	0.5127	SLU 7-NL	NonStatic	Min	-525.82	239.55	2.876E-14	0.
18	0.	SLE-C-NL	NonStatic	Max	-461.018	333.843	4.011E-14	0.
18	0.25635	SLE-C-NL	NonStatic	Max	-459.129	328.396	3.944E-14	0.
18	0.5127	SLE-C-NL	NonStatic	Max	-457.24	322.948	3.878E-14	0.
18	0.	SLE-C-NL	NonStatic	Min	-461.018	333.843	4.011E-14	0.
18	0.25635	SLE-C-NL	NonStatic	Min	-459.129	328.396	3.944E-14	0.
18	0.5127	SLE-C-NL	NonStatic	Min	-457.24	322.948	3.878E-14	0.
18	0.	SLE-F-1-NL	NonStatic	Max	-429.729	332.93	4.000E-14	0.
18	0.25635	SLE-F-1-NL	NonStatic	Max	-427.84	327.482	3.933E-14	0.
18	0.5127	SLE-F-1-NL	NonStatic	Max	-425.951	322.034	3.867E-14	0.
18	0.	SLE-F-1-NL	NonStatic	Min	-429.729	332.93	4.000E-14	0.
18	0.25635	SLE-F-1-NL	NonStatic	Min	-427.84	327.482	3.933E-14	0.
18	0.5127	SLE-F-1-NL	NonStatic	Min	-425.951	322.034	3.867E-14	0.
18	0.	SLE-F-2-NL	NonStatic	Max	-432.414	285.85	3.435E-14	0.
18	0.25635	SLE-F-2-NL	NonStatic	Max	-430.525	280.402	3.368E-14	0.
18	0.5127	SLE-F-2-NL	NonStatic	Max	-428.636	274.954	3.301E-14	0.
18	0.	SLE-F-2-NL	NonStatic	Min	-432.414	285.85	3.435E-14	0.
18	0.25635	SLE-F-2-NL	NonStatic	Min	-430.525	280.402	3.368E-14	0.
18	0.5127	SLE-F-2-NL	NonStatic	Min	-428.636	274.954	3.301E-14	0.
18	0.	SLE-F-3-NL	NonStatic	Max	-434.021	285.26	3.427E-14	0.
18	0.25635	SLE-F-3-NL	NonStatic	Max	-432.132	279.812	3.361E-14	0.
18	0.5127	SLE-F-3-NL	NonStatic	Max	-430.243	274.364	3.294E-14	0.
18	0.	SLE-F-3-NL	NonStatic	Min	-434.021	285.26	3.427E-14	0.
18	0.25635	SLE-F-3-NL	NonStatic	Min	-432.132	279.812	3.361E-14	0.
18	0.5127	SLE-F-3-NL	NonStatic	Min	-430.243	274.364	3.294E-14	0.
18	0.	SLE-QP-NL	NonStatic	Max	-415.196	291.678	3.505E-14	0.
18	0.25635	SLE-QP-NL	NonStatic	Max	-413.307	286.23	3.438E-14	0.
18	0.5127	SLE-QP-NL	NonStatic	Max	-411.418	280.782	3.371E-14	0.
18	0.	SLE-QP-NL	NonStatic	Min	-415.196	291.678	3.505E-14	0.
18	0.25635	SLE-QP-NL	NonStatic	Min	-413.307	286.23	3.438E-14	0.
18	0.5127	SLE-QP-NL	NonStatic	Min	-411.418	280.782	3.371E-14	0.
18	0.	SLV1-NL	NonStatic	Max	-517.161	273.992	3.292E-14	0.
18	0.25635	SLV1-NL	NonStatic	Max	-515.756	268.291	3.222E-14	0.
18	0.5127	SLV1-NL	NonStatic	Max	-514.35	262.589	3.153E-14	0.
18	0.	SLV1-NL	NonStatic	Min	-517.161	273.992	3.292E-14	0.
18	0.25635	SLV1-NL	NonStatic	Min	-515.756	268.291	3.222E-14	0.
18	0.5127	SLV1-NL	NonStatic	Min	-514.35	262.589	3.153E-14	0.
18	0.	SLV2-NL	NonStatic	Max	-436.706	291.259	3.500E-14	0.
18	0.25635	SLV2-NL	NonStatic	Max	-434.281	285.911	3.434E-14	0.
18	0.5127	SLV2-NL	NonStatic	Max	-431.855	280.564	3.369E-14	0.
18	0.	SLV2-NL	NonStatic	Min	-436.706	291.259	3.500E-14	0.
18	0.25635	SLV2-NL	NonStatic	Min	-434.281	285.911	3.434E-14	0.
18	0.5127	SLV2-NL	NonStatic	Min	-431.855	280.564	3.369E-14	0.
18	0.	SLV3-NL	NonStatic	Max	-515.668	273.688	3.288E-14	0.
18	0.25635	SLV3-NL	NonStatic	Max	-514.315	268.139	3.221E-14	0.

Table: Element Forces - Frames, Part 1 of 2

Frame	Station	OutputCase	CaseType	StepType	P	V2	V3	T
	m				KN	KN	KN	KN-m
18	0.5127	SLV3-NL	NonStatic	Max	-512.963	262.591	3.153E-14	0.
18	0.	SLV3-NL	NonStatic	Min	-515.668	273.688	3.288E-14	0.
18	0.25635	SLV3-NL	NonStatic	Min	-514.315	268.139	3.221E-14	0.
18	0.5127	SLV3-NL	NonStatic	Min	-512.963	262.591	3.153E-14	0.
18	0.	SLV4-NL	NonStatic	Max	-435.208	290.951	3.496E-14	0.
18	0.25635	SLV4-NL	NonStatic	Max	-432.835	285.757	3.432E-14	0.
18	0.5127	SLV4-NL	NonStatic	Max	-430.463	280.562	3.369E-14	0.
18	0.	SLV4-NL	NonStatic	Min	-435.208	290.951	3.496E-14	0.
18	0.25635	SLV4-NL	NonStatic	Min	-432.835	285.757	3.432E-14	0.
18	0.5127	SLV4-NL	NonStatic	Min	-430.463	280.562	3.369E-14	0.
18	0.	SLV5-NL	NonStatic	Max	-450.101	294.238	3.535E-14	0.
18	0.25635	SLV5-NL	NonStatic	Max	-448.276	288.482	3.465E-14	0.
18	0.5127	SLV5-NL	NonStatic	Max	-446.452	282.726	3.394E-14	0.
18	0.	SLV5-NL	NonStatic	Min	-450.101	294.238	3.535E-14	0.
18	0.25635	SLV5-NL	NonStatic	Min	-448.276	288.482	3.465E-14	0.
18	0.5127	SLV5-NL	NonStatic	Min	-446.452	282.726	3.394E-14	0.
18	0.	SLV6-NL	NonStatic	Max	-425.726	299.475	3.598E-14	0.
18	0.25635	SLV6-NL	NonStatic	Max	-423.596	293.825	3.529E-14	0.
18	0.5127	SLV6-NL	NonStatic	Max	-421.466	288.175	3.460E-14	0.
18	0.	SLV6-NL	NonStatic	Min	-425.726	299.475	3.598E-14	0.
18	0.25635	SLV6-NL	NonStatic	Min	-423.596	293.825	3.529E-14	0.
18	0.5127	SLV6-NL	NonStatic	Min	-421.466	288.175	3.460E-14	0.
18	0.	SLV7-NL	NonStatic	Max	-445.122	293.222	3.523E-14	0.
18	0.25635	SLV7-NL	NonStatic	Max	-443.475	287.976	3.459E-14	0.
18	0.5127	SLV7-NL	NonStatic	Max	-441.827	282.73	3.395E-14	0.
18	0.	SLV7-NL	NonStatic	Min	-445.122	293.222	3.523E-14	0.
18	0.25635	SLV7-NL	NonStatic	Min	-443.475	287.976	3.459E-14	0.
18	0.5127	SLV7-NL	NonStatic	Min	-441.827	282.73	3.395E-14	0.
18	0.	SLV8-NL	NonStatic	Max	-420.731	298.453	3.586E-14	0.
18	0.25635	SLV8-NL	NonStatic	Max	-418.777	293.313	3.523E-14	0.
18	0.5127	SLV8-NL	NonStatic	Max	-416.824	288.173	3.460E-14	0.
18	0.	SLV8-NL	NonStatic	Min	-420.731	298.453	3.586E-14	0.
18	0.25635	SLV8-NL	NonStatic	Min	-418.777	293.313	3.523E-14	0.
18	0.5127	SLV8-NL	NonStatic	Min	-416.824	288.173	3.460E-14	0.
18	0.	SLV9-NL	NonStatic	Max	-465.755	279.131	3.354E-14	0.
18	0.25635	SLV9-NL	NonStatic	Max	-463.383	273.936	3.290E-14	0.
18	0.5127	SLV9-NL	NonStatic	Max	-461.01	268.742	3.227E-14	0.
18	0.	SLV9-NL	NonStatic	Min	-465.755	279.131	3.354E-14	0.
18	0.25635	SLV9-NL	NonStatic	Min	-463.383	273.936	3.290E-14	0.
18	0.5127	SLV9-NL	NonStatic	Min	-461.01	268.742	3.227E-14	0.
18	0.	SLV10-NL	NonStatic	Max	-405.283	301.723	3.625E-14	0.
18	0.25635	SLV10-NL	NonStatic	Max	-403.93	296.174	3.557E-14	0.
18	0.5127	SLV10-NL	NonStatic	Max	-402.578	290.626	3.489E-14	0.
18	0.	SLV10-NL	NonStatic	Min	-405.283	301.723	3.625E-14	0.
18	0.25635	SLV10-NL	NonStatic	Min	-403.93	296.174	3.557E-14	0.
18	0.5127	SLV10-NL	NonStatic	Min	-402.578	290.626	3.489E-14	0.
18	0.	SLV11-NL	NonStatic	Max	-470.227	289.373	3.477E-14	0.
18	0.25635	SLV11-NL	NonStatic	Max	-467.802	284.025	3.411E-14	0.
18	0.5127	SLV11-NL	NonStatic	Max	-465.377	278.678	3.346E-14	0.
18	0.	SLV11-NL	NonStatic	Min	-470.227	289.373	3.477E-14	0.
18	0.25635	SLV11-NL	NonStatic	Min	-467.802	284.025	3.411E-14	0.
18	0.5127	SLV11-NL	NonStatic	Min	-465.377	278.678	3.346E-14	0.
18	0.	SLV12-NL	NonStatic	Max	-409.731	311.972	3.748E-14	0.
18	0.25635	SLV12-NL	NonStatic	Max	-408.325	306.27	3.679E-14	0.

Table: Element Forces - Frames, Part 1 of 2

Frame	Station	OutputCase	CaseType	StepType	P	V2	V3	T
	m				KN	KN	KN	KN-m
18	0.5127	SLV12-NL	NonStatic	Max	-406.92	300.569	3.609E-14	0.
18	0.	SLV12-NL	NonStatic	Min	-409.731	311.972	3.748E-14	0.
18	0.25635	SLV12-NL	NonStatic	Min	-408.325	306.27	3.679E-14	0.
18	0.5127	SLV12-NL	NonStatic	Min	-406.92	300.569	3.609E-14	0.
18	0.	SLV13-NL	NonStatic	Max	-425.63	279.779	3.362E-14	0.
18	0.25635	SLV13-NL	NonStatic	Max	-423.677	274.639	3.299E-14	0.
18	0.5127	SLV13-NL	NonStatic	Max	-421.723	269.499	3.236E-14	0.
18	0.	SLV13-NL	NonStatic	Min	-425.63	279.779	3.362E-14	0.
18	0.25635	SLV13-NL	NonStatic	Min	-423.677	274.639	3.299E-14	0.
18	0.5127	SLV13-NL	NonStatic	Min	-421.723	269.499	3.236E-14	0.
18	0.	SLV14-NL	NonStatic	Max	-407.778	286.425	3.441E-14	0.
18	0.25635	SLV14-NL	NonStatic	Max	-406.13	281.179	3.377E-14	0.
18	0.5127	SLV14-NL	NonStatic	Max	-404.482	275.933	3.313E-14	0.
18	0.	SLV14-NL	NonStatic	Min	-407.778	286.425	3.441E-14	0.
18	0.25635	SLV14-NL	NonStatic	Min	-406.13	281.179	3.377E-14	0.
18	0.5127	SLV14-NL	NonStatic	Min	-404.482	275.933	3.313E-14	0.
18	0.	SLV15-NL	NonStatic	Max	-441.51	313.614	3.768E-14	0.
18	0.25635	SLV15-NL	NonStatic	Max	-439.379	307.965	3.699E-14	0.
18	0.5127	SLV15-NL	NonStatic	Max	-437.249	302.315	3.630E-14	0.
18	0.	SLV15-NL	NonStatic	Min	-441.51	313.614	3.768E-14	0.
18	0.25635	SLV15-NL	NonStatic	Min	-439.379	307.965	3.699E-14	0.
18	0.5127	SLV15-NL	NonStatic	Min	-437.249	302.315	3.630E-14	0.
18	0.	SLV16-NL	NonStatic	Max	-423.822	320.158	3.847E-14	0.
18	0.25635	SLV16-NL	NonStatic	Max	-421.998	314.402	3.776E-14	0.
18	0.5127	SLV16-NL	NonStatic	Max	-420.173	308.646	3.706E-14	0.
18	0.	SLV16-NL	NonStatic	Min	-423.822	320.158	3.847E-14	0.
18	0.25635	SLV16-NL	NonStatic	Min	-421.998	314.402	3.776E-14	0.
18	0.5127	SLV16-NL	NonStatic	Min	-420.173	308.646	3.706E-14	0.
21	0.	SLU 1-NL	NonStatic	Max	-503.705	-433.068	0.	0.
21	0.41857	SLU 1-NL	NonStatic	Max	-476.567	-363.182	0.	0.
21	0.41857	SLU 1-NL	NonStatic	Max	-476.567	-363.182	0.	0.
21	0.83713	SLU 1-NL	NonStatic	Max	-451.204	-297.146	0.	0.
21	0.83713	SLU 1-NL	NonStatic	Max	-451.204	-297.146	0.	0.
21	1.04642	SLU 1-NL	NonStatic	Max	-439.188	-265.571	0.	0.
21	1.2557	SLU 1-NL	NonStatic	Max	-427.616	-234.959	0.	0.
21	1.2557	SLU 1-NL	NonStatic	Max	-427.616	-234.959	0.	0.
21	1.67427	SLU 1-NL	NonStatic	Max	-405.803	-176.621	0.	0.
21	1.67427	SLU 1-NL	NonStatic	Max	-405.803	-176.621	0.	0.
21	2.09284	SLU 1-NL	NonStatic	Max	-385.765	-122.132	0.	0.
21	0.	SLU 1-NL	NonStatic	Min	-503.705	-433.068	0.	0.
21	0.41857	SLU 1-NL	NonStatic	Min	-476.567	-363.182	0.	0.
21	0.41857	SLU 1-NL	NonStatic	Min	-476.567	-363.182	0.	0.
21	0.83713	SLU 1-NL	NonStatic	Min	-451.204	-297.146	0.	0.
21	0.83713	SLU 1-NL	NonStatic	Min	-451.204	-297.146	0.	0.
21	1.04642	SLU 1-NL	NonStatic	Min	-439.188	-265.571	0.	0.
21	1.2557	SLU 1-NL	NonStatic	Min	-427.616	-234.959	0.	0.
21	1.2557	SLU 1-NL	NonStatic	Min	-427.616	-234.959	0.	0.
21	1.67427	SLU 1-NL	NonStatic	Min	-405.803	-176.621	0.	0.
21	1.67427	SLU 1-NL	NonStatic	Min	-405.803	-176.621	0.	0.
21	2.09284	SLU 1-NL	NonStatic	Min	-385.765	-122.132	0.	0.
21	0.	SLU 2-NL	NonStatic	Max	-447.056	-468.608	0.	0.
21	0.41857	SLU 2-NL	NonStatic	Max	-415.299	-401.62	0.	0.
21	0.41857	SLU 2-NL	NonStatic	Max	-415.299	-401.62	0.	0.
21	0.83713	SLU 2-NL	NonStatic	Max	-385.423	-338.415	0.	0.

Table: Element Forces - Frames, Part 1 of 2

Frame	Station	OutputCase	CaseType	StepType	P	V2	V3	T
	m				KN	KN	KN	KN-m
21	0.83713	SLU 2-NL	NonStatic	Max	-385.423	-338.415	0.	0.
21	1.04642	SLU 2-NL	NonStatic	Max	-371.191	-308.231	0.	0.
21	1.2557	SLU 2-NL	NonStatic	Max	-357.429	-278.992	0.	0.
21	1.2557	SLU 2-NL	NonStatic	Max	-357.429	-278.992	0.	0.
21	1.67427	SLU 2-NL	NonStatic	Max	-331.315	-223.353	0.	0.
21	1.67427	SLU 2-NL	NonStatic	Max	-331.315	-223.353	0.	0.
21	2.09284	SLU 2-NL	NonStatic	Max	-307.082	-171.496	0.	0.
21	0.	SLU 2-NL	NonStatic	Min	-447.056	-468.608	0.	0.
21	0.41857	SLU 2-NL	NonStatic	Min	-415.299	-401.62	0.	0.
21	0.41857	SLU 2-NL	NonStatic	Min	-415.299	-401.62	0.	0.
21	0.83713	SLU 2-NL	NonStatic	Min	-385.423	-338.415	0.	0.
21	0.83713	SLU 2-NL	NonStatic	Min	-385.423	-338.415	0.	0.
21	1.04642	SLU 2-NL	NonStatic	Min	-371.191	-308.231	0.	0.
21	1.2557	SLU 2-NL	NonStatic	Min	-357.429	-278.992	0.	0.
21	1.2557	SLU 2-NL	NonStatic	Min	-357.429	-278.992	0.	0.
21	1.67427	SLU 2-NL	NonStatic	Min	-331.315	-223.353	0.	0.
21	1.67427	SLU 2-NL	NonStatic	Min	-331.315	-223.353	0.	0.
21	2.09284	SLU 2-NL	NonStatic	Min	-307.082	-171.496	0.	0.
21	0.	SLU 3-NL	NonStatic	Max	-371.39	-234.985	0.	0.
21	0.41857	SLU 3-NL	NonStatic	Max	-357.629	-186.423	0.	0.
21	0.41857	SLU 3-NL	NonStatic	Max	-357.629	-186.423	0.	0.
21	0.83713	SLU 3-NL	NonStatic	Max	-345.128	-140.887	0.	0.
21	0.83713	SLU 3-NL	NonStatic	Max	-345.128	-140.887	0.	0.
21	1.04642	SLU 3-NL	NonStatic	Max	-339.35	-119.255	0.	0.
21	1.2557	SLU 3-NL	NonStatic	Max	-333.886	-98.38	0.	0.
21	1.2557	SLU 3-NL	NonStatic	Max	-333.886	-98.38	0.	0.
21	1.67427	SLU 3-NL	NonStatic	Max	-323.904	-58.9	0.	0.
21	1.67427	SLU 3-NL	NonStatic	Max	-323.904	-58.9	0.	0.
21	2.09284	SLU 3-NL	NonStatic	Max	-315.181	-22.447	0.	0.
21	0.	SLU 3-NL	NonStatic	Min	-371.39	-234.985	0.	0.
21	0.41857	SLU 3-NL	NonStatic	Min	-357.629	-186.423	0.	0.
21	0.41857	SLU 3-NL	NonStatic	Min	-357.629	-186.423	0.	0.
21	0.83713	SLU 3-NL	NonStatic	Min	-345.128	-140.887	0.	0.
21	0.83713	SLU 3-NL	NonStatic	Min	-345.128	-140.887	0.	0.
21	1.04642	SLU 3-NL	NonStatic	Min	-339.35	-119.255	0.	0.
21	1.2557	SLU 3-NL	NonStatic	Min	-333.886	-98.38	0.	0.
21	1.2557	SLU 3-NL	NonStatic	Min	-333.886	-98.38	0.	0.
21	1.67427	SLU 3-NL	NonStatic	Min	-323.904	-58.9	0.	0.
21	1.67427	SLU 3-NL	NonStatic	Min	-323.904	-58.9	0.	0.
21	2.09284	SLU 3-NL	NonStatic	Min	-315.181	-22.447	0.	0.
21	0.	SLU 4-NL	NonStatic	Max	-486.615	-433.341	0.	0.
21	0.41857	SLU 4-NL	NonStatic	Max	-459.477	-363.455	0.	0.
21	0.41857	SLU 4-NL	NonStatic	Max	-459.477	-363.455	0.	0.
21	0.83713	SLU 4-NL	NonStatic	Max	-434.114	-297.419	0.	0.
21	0.83713	SLU 4-NL	NonStatic	Max	-434.114	-297.419	0.	0.
21	1.04642	SLU 4-NL	NonStatic	Max	-422.098	-265.844	0.	0.
21	1.2557	SLU 4-NL	NonStatic	Max	-410.526	-235.232	0.	0.
21	1.2557	SLU 4-NL	NonStatic	Max	-410.526	-235.232	0.	0.
21	1.67427	SLU 4-NL	NonStatic	Max	-388.713	-176.894	0.	0.
21	1.67427	SLU 4-NL	NonStatic	Max	-388.713	-176.894	0.	0.
21	2.09284	SLU 4-NL	NonStatic	Max	-368.675	-122.405	0.	0.
21	0.	SLU 4-NL	NonStatic	Min	-486.615	-433.341	0.	0.
21	0.41857	SLU 4-NL	NonStatic	Min	-459.477	-363.455	0.	0.
21	0.41857	SLU 4-NL	NonStatic	Min	-459.477	-363.455	0.	0.

Table: Element Forces - Frames, Part 1 of 2

Frame	Station	OutputCase	CaseType	StepType	P	V2	V3	T
	m				KN	KN	KN	KN-m
21	0.83713	SLU 4-NL	NonStatic	Min	-434.114	-297.419	0.	0.
21	0.83713	SLU 4-NL	NonStatic	Min	-434.114	-297.419	0.	0.
21	1.04642	SLU 4-NL	NonStatic	Min	-422.098	-265.844	0.	0.
21	1.2557	SLU 4-NL	NonStatic	Min	-410.526	-235.232	0.	0.
21	1.2557	SLU 4-NL	NonStatic	Min	-410.526	-235.232	0.	0.
21	1.67427	SLU 4-NL	NonStatic	Min	-388.713	-176.894	0.	0.
21	1.67427	SLU 4-NL	NonStatic	Min	-388.713	-176.894	0.	0.
21	2.09284	SLU 4-NL	NonStatic	Min	-368.675	-122.405	0.	0.
21	0.	SLU 5-NL	NonStatic	Max	-359.711	-231.54	0.	0.
21	0.41857	SLU 5-NL	NonStatic	Max	-345.951	-182.977	0.	0.
21	0.41857	SLU 5-NL	NonStatic	Max	-345.951	-182.977	0.	0.
21	0.83713	SLU 5-NL	NonStatic	Max	-333.45	-137.442	0.	0.
21	0.83713	SLU 5-NL	NonStatic	Max	-333.45	-137.442	0.	0.
21	1.04642	SLU 5-NL	NonStatic	Max	-327.671	-115.81	0.	0.
21	1.2557	SLU 5-NL	NonStatic	Max	-322.208	-94.934	0.	0.
21	1.2557	SLU 5-NL	NonStatic	Max	-322.208	-94.934	0.	0.
21	1.67427	SLU 5-NL	NonStatic	Max	-312.226	-55.454	0.	0.
21	1.67427	SLU 5-NL	NonStatic	Max	-312.226	-55.454	0.	0.
21	2.09284	SLU 5-NL	NonStatic	Max	-303.503	-19.001	0.	0.
21	0.	SLU 5-NL	NonStatic	Min	-359.711	-231.54	0.	0.
21	0.41857	SLU 5-NL	NonStatic	Min	-345.951	-182.977	0.	0.
21	0.41857	SLU 5-NL	NonStatic	Min	-345.951	-182.977	0.	0.
21	0.83713	SLU 5-NL	NonStatic	Min	-333.45	-137.442	0.	0.
21	0.83713	SLU 5-NL	NonStatic	Min	-333.45	-137.442	0.	0.
21	1.04642	SLU 5-NL	NonStatic	Min	-327.671	-115.81	0.	0.
21	1.2557	SLU 5-NL	NonStatic	Min	-322.208	-94.934	0.	0.
21	1.2557	SLU 5-NL	NonStatic	Min	-322.208	-94.934	0.	0.
21	1.67427	SLU 5-NL	NonStatic	Min	-312.226	-55.454	0.	0.
21	1.67427	SLU 5-NL	NonStatic	Min	-312.226	-55.454	0.	0.
21	2.09284	SLU 5-NL	NonStatic	Min	-303.503	-19.001	0.	0.
21	0.	SLU 6-NL	NonStatic	Max	-528.647	-427.87	0.	0.
21	0.41857	SLU 6-NL	NonStatic	Max	-496.89	-360.882	0.	0.
21	0.41857	SLU 6-NL	NonStatic	Max	-496.89	-360.882	0.	0.
21	0.83713	SLU 6-NL	NonStatic	Max	-467.014	-297.677	0.	0.
21	0.83713	SLU 6-NL	NonStatic	Max	-467.014	-297.676	0.	0.
21	1.04642	SLU 6-NL	NonStatic	Max	-452.781	-267.492	0.	0.
21	1.2557	SLU 6-NL	NonStatic	Max	-439.019	-238.254	0.	0.
21	1.2557	SLU 6-NL	NonStatic	Max	-439.019	-238.254	0.	0.
21	1.67427	SLU 6-NL	NonStatic	Max	-412.905	-182.614	0.	0.
21	1.67427	SLU 6-NL	NonStatic	Max	-412.905	-182.614	0.	0.
21	2.09284	SLU 6-NL	NonStatic	Max	-388.672	-130.758	0.	0.
21	0.	SLU 6-NL	NonStatic	Min	-528.647	-427.87	0.	0.
21	0.41857	SLU 6-NL	NonStatic	Min	-496.89	-360.882	0.	0.
21	0.41857	SLU 6-NL	NonStatic	Min	-496.89	-360.882	0.	0.
21	0.83713	SLU 6-NL	NonStatic	Min	-467.014	-297.677	0.	0.
21	0.83713	SLU 6-NL	NonStatic	Min	-467.014	-297.676	0.	0.
21	1.04642	SLU 6-NL	NonStatic	Min	-452.781	-267.492	0.	0.
21	1.2557	SLU 6-NL	NonStatic	Min	-439.019	-238.254	0.	0.
21	1.2557	SLU 6-NL	NonStatic	Min	-439.019	-238.254	0.	0.
21	1.67427	SLU 6-NL	NonStatic	Min	-412.905	-182.614	0.	0.
21	1.67427	SLU 6-NL	NonStatic	Min	-412.905	-182.614	0.	0.
21	2.09284	SLU 6-NL	NonStatic	Min	-388.672	-130.758	0.	0.
21	0.	SLU 7-NL	NonStatic	Max	-402.034	-226.532	0.	0.
21	0.41857	SLU 7-NL	NonStatic	Max	-383.655	-180.867	0.	0.

Table: Element Forces - Frames, Part 1 of 2

Frame	Station	OutputCase	CaseType	StepType	P	V2	V3	T
	m				KN	KN	KN	KN-m
21	0.41857	SLU 7-NL	NonStatic	Max	-383.655	-180.867	0.	0.
21	0.83713	SLU 7-NL	NonStatic	Max	-366.641	-138.163	0.	0.
21	0.83713	SLU 7-NL	NonStatic	Max	-366.641	-138.163	0.	0.
21	1.04642	SLU 7-NL	NonStatic	Max	-358.646	-117.922	0.	0.
21	1.2557	SLU 7-NL	NonStatic	Max	-350.992	-98.42	0.	0.
21	1.2557	SLU 7-NL	NonStatic	Max	-350.992	-98.42	0.	0.
21	1.67427	SLU 7-NL	NonStatic	Max	-336.709	-61.638	0.	0.
21	1.67427	SLU 7-NL	NonStatic	Max	-336.709	-61.638	0.	0.
21	2.09284	SLU 7-NL	NonStatic	Max	-323.791	-27.817	0.	0.
21	0.	SLU 7-NL	NonStatic	Min	-402.034	-226.532	0.	0.
21	0.41857	SLU 7-NL	NonStatic	Min	-383.655	-180.867	0.	0.
21	0.41857	SLU 7-NL	NonStatic	Min	-383.655	-180.867	0.	0.
21	0.83713	SLU 7-NL	NonStatic	Min	-366.641	-138.163	0.	0.
21	0.83713	SLU 7-NL	NonStatic	Min	-366.641	-138.163	0.	0.
21	1.04642	SLU 7-NL	NonStatic	Min	-358.646	-117.922	0.	0.
21	1.2557	SLU 7-NL	NonStatic	Min	-350.992	-98.42	0.	0.
21	1.2557	SLU 7-NL	NonStatic	Min	-350.992	-98.42	0.	0.
21	1.67427	SLU 7-NL	NonStatic	Min	-336.709	-61.638	0.	0.
21	1.67427	SLU 7-NL	NonStatic	Min	-336.709	-61.638	0.	0.
21	2.09284	SLU 7-NL	NonStatic	Min	-323.791	-27.817	0.	0.
21	0.	SLE-C-NL	NonStatic	Max	-377.74	-324.8	0.	0.
21	0.41857	SLE-C-NL	NonStatic	Max	-357.197	-272.121	0.	0.
21	0.41857	SLE-C-NL	NonStatic	Max	-357.197	-272.121	0.	0.
21	0.83713	SLE-C-NL	NonStatic	Max	-338.02	-222.403	0.	0.
21	0.83713	SLE-C-NL	NonStatic	Max	-338.02	-222.403	0.	0.
21	1.04642	SLE-C-NL	NonStatic	Max	-328.943	-198.654	0.	0.
21	1.2557	SLE-C-NL	NonStatic	Max	-320.208	-175.646	0.	0.
21	1.2557	SLE-C-NL	NonStatic	Max	-320.208	-175.646	0.	0.
21	1.67427	SLE-C-NL	NonStatic	Max	-303.762	-131.85	0.	0.
21	1.67427	SLE-C-NL	NonStatic	Max	-303.762	-131.85	0.	0.
21	2.09284	SLE-C-NL	NonStatic	Max	-288.681	-91.014	0.	0.
21	0.	SLE-C-NL	NonStatic	Min	-377.74	-324.8	0.	0.
21	0.41857	SLE-C-NL	NonStatic	Min	-357.197	-272.121	0.	0.
21	0.41857	SLE-C-NL	NonStatic	Min	-357.197	-272.121	0.	0.
21	0.83713	SLE-C-NL	NonStatic	Min	-338.02	-222.403	0.	0.
21	0.83713	SLE-C-NL	NonStatic	Min	-338.02	-222.403	0.	0.
21	1.04642	SLE-C-NL	NonStatic	Min	-328.943	-198.654	0.	0.
21	1.2557	SLE-C-NL	NonStatic	Min	-320.208	-175.646	0.	0.
21	1.2557	SLE-C-NL	NonStatic	Min	-320.208	-175.646	0.	0.
21	1.67427	SLE-C-NL	NonStatic	Min	-303.762	-131.85	0.	0.
21	1.67427	SLE-C-NL	NonStatic	Min	-303.762	-131.85	0.	0.
21	2.09284	SLE-C-NL	NonStatic	Min	-288.681	-91.014	0.	0.
21	0.	SLE-F-1-NL	NonStatic	Max	-352.702	-321.748	0.	0.
21	0.41857	SLE-F-1-NL	NonStatic	Max	-331.308	-271.278	0.	0.
21	0.41857	SLE-F-1-NL	NonStatic	Max	-331.308	-271.278	0.	0.
21	0.83713	SLE-F-1-NL	NonStatic	Max	-311.279	-223.768	0.	0.
21	0.83713	SLE-F-1-NL	NonStatic	Max	-311.279	-223.768	0.	0.
21	1.04642	SLE-F-1-NL	NonStatic	Max	-301.777	-201.124	0.	0.
21	1.2557	SLE-F-1-NL	NonStatic	Max	-292.616	-179.22	0.	0.
21	1.2557	SLE-F-1-NL	NonStatic	Max	-292.616	-179.22	0.	0.
21	1.67427	SLE-F-1-NL	NonStatic	Max	-275.317	-137.632	0.	0.
21	1.67427	SLE-F-1-NL	NonStatic	Max	-275.317	-137.632	0.	0.
21	2.09284	SLE-F-1-NL	NonStatic	Max	-259.385	-99.005	0.	0.
21	0.	SLE-F-1-NL	NonStatic	Min	-352.702	-321.748	0.	0.

Table: Element Forces - Frames, Part 1 of 2

Frame	Station	OutputCase	CaseType	StepType	P	V2	V3	T
	m				KN	KN	KN	KN-m
21	0.41857	SLE-F-1-NL	NonStatic	Min	-331.308	-271.278	0.	0.
21	0.41857	SLE-F-1-NL	NonStatic	Min	-331.308	-271.278	0.	0.
21	0.83713	SLE-F-1-NL	NonStatic	Min	-311.279	-223.768	0.	0.
21	0.83713	SLE-F-1-NL	NonStatic	Min	-311.279	-223.768	0.	0.
21	1.04642	SLE-F-1-NL	NonStatic	Min	-301.777	-201.124	0.	0.
21	1.2557	SLE-F-1-NL	NonStatic	Min	-292.616	-179.22	0.	0.
21	1.2557	SLE-F-1-NL	NonStatic	Min	-292.616	-179.22	0.	0.
21	1.67427	SLE-F-1-NL	NonStatic	Min	-275.317	-137.632	0.	0.
21	1.67427	SLE-F-1-NL	NonStatic	Min	-275.317	-137.632	0.	0.
21	2.09284	SLE-F-1-NL	NonStatic	Min	-259.385	-99.005	0.	0.
21	0.	SLE-F-2-NL	NonStatic	Max	-320.054	-263.634	0.	0.
21	0.41857	SLE-F-2-NL	NonStatic	Max	-302.959	-217.163	0.	0.
21	0.41857	SLE-F-2-NL	NonStatic	Max	-302.959	-217.163	0.	0.
21	0.83713	SLE-F-2-NL	NonStatic	Max	-287.23	-173.654	0.	0.
21	0.83713	SLE-F-2-NL	NonStatic	Max	-287.23	-173.654	0.	0.
21	1.04642	SLE-F-2-NL	NonStatic	Max	-279.877	-153.009	0.	0.
21	1.2557	SLE-F-2-NL	NonStatic	Max	-272.865	-133.105	0.	0.
21	1.2557	SLE-F-2-NL	NonStatic	Max	-272.865	-133.105	0.	0.
21	1.67427	SLE-F-2-NL	NonStatic	Max	-259.867	-95.517	0.	0.
21	1.67427	SLE-F-2-NL	NonStatic	Max	-259.867	-95.517	0.	0.
21	2.09284	SLE-F-2-NL	NonStatic	Max	-248.233	-60.891	0.	0.
21	0.	SLE-F-2-NL	NonStatic	Min	-320.054	-263.634	0.	0.
21	0.41857	SLE-F-2-NL	NonStatic	Min	-302.959	-217.163	0.	0.
21	0.41857	SLE-F-2-NL	NonStatic	Min	-302.959	-217.163	0.	0.
21	0.83713	SLE-F-2-NL	NonStatic	Min	-287.23	-173.654	0.	0.
21	0.83713	SLE-F-2-NL	NonStatic	Min	-287.23	-173.654	0.	0.
21	1.04642	SLE-F-2-NL	NonStatic	Min	-279.877	-153.009	0.	0.
21	1.2557	SLE-F-2-NL	NonStatic	Min	-272.865	-133.105	0.	0.
21	1.2557	SLE-F-2-NL	NonStatic	Min	-272.865	-133.105	0.	0.
21	1.67427	SLE-F-2-NL	NonStatic	Min	-259.867	-95.517	0.	0.
21	1.67427	SLE-F-2-NL	NonStatic	Min	-259.867	-95.517	0.	0.
21	2.09284	SLE-F-2-NL	NonStatic	Min	-248.233	-60.891	0.	0.
21	0.	SLE-F-3-NL	NonStatic	Max	-333.082	-262.575	0.	0.
21	0.41857	SLE-F-3-NL	NonStatic	Max	-314.703	-216.911	0.	0.
21	0.41857	SLE-F-3-NL	NonStatic	Max	-314.703	-216.91	0.	0.
21	0.83713	SLE-F-3-NL	NonStatic	Max	-297.689	-174.207	0.	0.
21	0.83713	SLE-F-3-NL	NonStatic	Max	-297.689	-174.207	0.	0.
21	1.04642	SLE-F-3-NL	NonStatic	Max	-289.694	-153.965	0.	0.
21	1.2557	SLE-F-3-NL	NonStatic	Max	-282.04	-134.464	0.	0.
21	1.2557	SLE-F-3-NL	NonStatic	Max	-282.04	-134.464	0.	0.
21	1.67427	SLE-F-3-NL	NonStatic	Max	-267.757	-97.682	0.	0.
21	1.67427	SLE-F-3-NL	NonStatic	Max	-267.757	-97.682	0.	0.
21	2.09284	SLE-F-3-NL	NonStatic	Max	-254.839	-63.861	0.	0.
21	0.	SLE-F-3-NL	NonStatic	Min	-333.082	-262.575	0.	0.
21	0.41857	SLE-F-3-NL	NonStatic	Min	-314.703	-216.911	0.	0.
21	0.41857	SLE-F-3-NL	NonStatic	Min	-314.703	-216.91	0.	0.
21	0.83713	SLE-F-3-NL	NonStatic	Min	-297.689	-174.207	0.	0.
21	0.83713	SLE-F-3-NL	NonStatic	Min	-297.689	-174.207	0.	0.
21	1.04642	SLE-F-3-NL	NonStatic	Min	-289.694	-153.965	0.	0.
21	1.2557	SLE-F-3-NL	NonStatic	Min	-282.04	-134.464	0.	0.
21	1.2557	SLE-F-3-NL	NonStatic	Min	-282.04	-134.464	0.	0.
21	1.67427	SLE-F-3-NL	NonStatic	Min	-267.757	-97.682	0.	0.
21	1.67427	SLE-F-3-NL	NonStatic	Min	-267.757	-97.682	0.	0.
21	2.09284	SLE-F-3-NL	NonStatic	Min	-254.839	-63.861	0.	0.

Table: Element Forces - Frames, Part 1 of 2

Frame	Station	OutputCase	CaseType	StepType	P	V2	V3	T
	m				KN	KN	KN	KN-m
21	0.	SLE-QP-NL	NonStatic	Max	-314.735	-270.529	0.	0.
21	0.41857	SLE-QP-NL	NonStatic	Max	-296.355	-224.864	0.	0.
21	0.41857	SLE-QP-NL	NonStatic	Max	-296.355	-224.864	0.	0.
21	0.83713	SLE-QP-NL	NonStatic	Max	-279.341	-182.16	0.	0.
21	0.83713	SLE-QP-NL	NonStatic	Max	-279.341	-182.16	0.	0.
21	1.04642	SLE-QP-NL	NonStatic	Max	-271.346	-161.918	0.	0.
21	1.2557	SLE-QP-NL	NonStatic	Max	-263.693	-142.417	0.	0.
21	1.2557	SLE-QP-NL	NonStatic	Max	-263.693	-142.417	0.	0.
21	1.67427	SLE-QP-NL	NonStatic	Max	-249.409	-105.635	0.	0.
21	1.67427	SLE-QP-NL	NonStatic	Max	-249.409	-105.635	0.	0.
21	2.09284	SLE-QP-NL	NonStatic	Max	-236.492	-71.814	0.	0.
21	0.	SLE-QP-NL	NonStatic	Min	-314.735	-270.529	0.	0.
21	0.41857	SLE-QP-NL	NonStatic	Min	-296.355	-224.864	0.	0.
21	0.41857	SLE-QP-NL	NonStatic	Min	-296.355	-224.864	0.	0.
21	0.83713	SLE-QP-NL	NonStatic	Min	-279.341	-182.16	0.	0.
21	0.83713	SLE-QP-NL	NonStatic	Min	-279.341	-182.16	0.	0.
21	1.04642	SLE-QP-NL	NonStatic	Min	-271.346	-161.918	0.	0.
21	1.2557	SLE-QP-NL	NonStatic	Min	-263.693	-142.417	0.	0.
21	1.2557	SLE-QP-NL	NonStatic	Min	-263.693	-142.417	0.	0.
21	1.67427	SLE-QP-NL	NonStatic	Min	-249.409	-105.635	0.	0.
21	1.67427	SLE-QP-NL	NonStatic	Min	-249.409	-105.635	0.	0.
21	2.09284	SLE-QP-NL	NonStatic	Min	-236.492	-71.814	0.	0.
21	0.	SLV1-NL	NonStatic	Max	-350.521	-249.515	0.	0.
21	0.41857	SLV1-NL	NonStatic	Max	-336.6	-199.512	0.	0.
21	0.41857	SLV1-NL	NonStatic	Max	-336.6	-199.512	0.	0.
21	0.83713	SLV1-NL	NonStatic	Max	-323.925	-152.573	0.	0.
21	0.83713	SLV1-NL	NonStatic	Max	-323.925	-152.573	0.	0.
21	1.04642	SLV1-NL	NonStatic	Max	-318.054	-130.252	0.	0.
21	1.2557	SLV1-NL	NonStatic	Max	-312.495	-108.698	0.	0.
21	1.2557	SLV1-NL	NonStatic	Max	-312.495	-108.698	0.	0.
21	1.67427	SLV1-NL	NonStatic	Max	-302.31	-67.887	0.	0.
21	1.67427	SLV1-NL	NonStatic	Max	-302.31	-67.887	0.	0.
21	2.09284	SLV1-NL	NonStatic	Max	-293.37	-30.14	0.	0.
21	0.	SLV1-NL	NonStatic	Min	-350.521	-249.515	0.	0.
21	0.41857	SLV1-NL	NonStatic	Min	-336.6	-199.512	0.	0.
21	0.41857	SLV1-NL	NonStatic	Min	-336.6	-199.512	0.	0.
21	0.83713	SLV1-NL	NonStatic	Min	-323.925	-152.573	0.	0.
21	0.83713	SLV1-NL	NonStatic	Min	-323.925	-152.573	0.	0.
21	1.04642	SLV1-NL	NonStatic	Min	-318.054	-130.252	0.	0.
21	1.2557	SLV1-NL	NonStatic	Min	-312.495	-108.698	0.	0.
21	1.2557	SLV1-NL	NonStatic	Min	-312.495	-108.698	0.	0.
21	1.67427	SLV1-NL	NonStatic	Min	-302.31	-67.887	0.	0.
21	1.67427	SLV1-NL	NonStatic	Min	-302.31	-67.887	0.	0.
21	2.09284	SLV1-NL	NonStatic	Min	-293.37	-30.14	0.	0.
21	0.	SLV2-NL	NonStatic	Max	-371.694	-265.488	0.	0.
21	0.41857	SLV2-NL	NonStatic	Max	-348.11	-221.547	0.	0.
21	0.41857	SLV2-NL	NonStatic	Max	-348.11	-221.547	0.	0.
21	0.83713	SLV2-NL	NonStatic	Max	-326.037	-180.503	0.	0.
21	0.83713	SLV2-NL	NonStatic	Max	-326.037	-180.503	0.	0.
21	1.04642	SLV2-NL	NonStatic	Max	-315.567	-161.068	0.	0.
21	1.2557	SLV2-NL	NonStatic	Max	-305.475	-142.358	0.	0.
21	1.2557	SLV2-NL	NonStatic	Max	-305.475	-142.357	0.	0.
21	1.67427	SLV2-NL	NonStatic	Max	-286.423	-107.109	0.	0.
21	1.67427	SLV2-NL	NonStatic	Max	-286.423	-107.109	0.	0.

Table: Element Forces - Frames, Part 1 of 2

Frame	Station	OutputCase	CaseType	StepType	P	V2	V3	T
	m				KN	KN	KN	KN-m
21	2.09284	SLV2-NL	NonStatic	Max	-268.882	-74.759	0.	0.
21	0.	SLV2-NL	NonStatic	Min	-371.694	-265.488	0.	0.
21	0.41857	SLV2-NL	NonStatic	Min	-348.11	-221.547	0.	0.
21	0.41857	SLV2-NL	NonStatic	Min	-348.11	-221.547	0.	0.
21	0.83713	SLV2-NL	NonStatic	Min	-326.037	-180.503	0.	0.
21	0.83713	SLV2-NL	NonStatic	Min	-326.037	-180.503	0.	0.
21	1.04642	SLV2-NL	NonStatic	Min	-315.567	-161.068	0.	0.
21	1.2557	SLV2-NL	NonStatic	Min	-305.475	-142.358	0.	0.
21	1.2557	SLV2-NL	NonStatic	Min	-305.475	-142.357	0.	0.
21	1.67427	SLV2-NL	NonStatic	Min	-286.423	-107.109	0.	0.
21	1.67427	SLV2-NL	NonStatic	Min	-286.423	-107.109	0.	0.
21	2.09284	SLV2-NL	NonStatic	Min	-268.882	-74.759	0.	0.
21	0.	SLV3-NL	NonStatic	Max	-353.956	-252.647	0.	0.
21	0.41857	SLV3-NL	NonStatic	Max	-339.916	-202.452	0.	0.
21	0.41857	SLV3-NL	NonStatic	Max	-339.916	-202.453	0.	0.
21	0.83713	SLV3-NL	NonStatic	Max	-327.095	-155.282	0.	0.
21	0.83713	SLV3-NL	NonStatic	Max	-327.095	-155.282	0.	0.
21	1.04642	SLV3-NL	NonStatic	Max	-321.143	-132.831	0.	0.
21	1.2557	SLV3-NL	NonStatic	Max	-315.495	-111.137	0.	0.
21	1.2557	SLV3-NL	NonStatic	Max	-315.495	-111.137	0.	0.
21	1.67427	SLV3-NL	NonStatic	Max	-305.115	-70.015	0.	0.
21	1.67427	SLV3-NL	NonStatic	Max	-305.115	-70.015	0.	0.
21	2.09284	SLV3-NL	NonStatic	Max	-295.956	-31.918	0.	0.
21	0.	SLV3-NL	NonStatic	Min	-353.956	-252.647	0.	0.
21	0.41857	SLV3-NL	NonStatic	Min	-339.916	-202.452	0.	0.
21	0.41857	SLV3-NL	NonStatic	Min	-339.916	-202.453	0.	0.
21	0.83713	SLV3-NL	NonStatic	Min	-327.095	-155.282	0.	0.
21	0.83713	SLV3-NL	NonStatic	Min	-327.095	-155.282	0.	0.
21	1.04642	SLV3-NL	NonStatic	Min	-321.143	-132.831	0.	0.
21	1.2557	SLV3-NL	NonStatic	Min	-315.495	-111.137	0.	0.
21	1.2557	SLV3-NL	NonStatic	Min	-315.495	-111.137	0.	0.
21	1.67427	SLV3-NL	NonStatic	Min	-305.115	-70.015	0.	0.
21	1.67427	SLV3-NL	NonStatic	Min	-305.115	-70.015	0.	0.
21	2.09284	SLV3-NL	NonStatic	Min	-295.956	-31.918	0.	0.
21	0.	SLV4-NL	NonStatic	Max	-375.127	-268.617	0.	0.
21	0.41857	SLV4-NL	NonStatic	Max	-351.424	-224.484	0.	0.
21	0.41857	SLV4-NL	NonStatic	Max	-351.424	-224.484	0.	0.
21	0.83713	SLV4-NL	NonStatic	Max	-329.206	-183.21	0.	0.
21	0.83713	SLV4-NL	NonStatic	Max	-329.206	-183.21	0.	0.
21	1.04642	SLV4-NL	NonStatic	Max	-318.654	-163.644	0.	0.
21	1.2557	SLV4-NL	NonStatic	Max	-308.474	-144.793	0.	0.
21	1.2557	SLV4-NL	NonStatic	Max	-308.474	-144.793	0.	0.
21	1.67427	SLV4-NL	NonStatic	Max	-289.227	-109.235	0.	0.
21	1.67427	SLV4-NL	NonStatic	Max	-289.227	-109.234	0.	0.
21	2.09284	SLV4-NL	NonStatic	Max	-271.466	-76.534	0.	0.
21	0.	SLV4-NL	NonStatic	Min	-375.127	-268.617	0.	0.
21	0.41857	SLV4-NL	NonStatic	Min	-351.424	-224.484	0.	0.
21	0.41857	SLV4-NL	NonStatic	Min	-351.424	-224.484	0.	0.
21	0.83713	SLV4-NL	NonStatic	Min	-329.206	-183.21	0.	0.
21	0.83713	SLV4-NL	NonStatic	Min	-329.206	-183.21	0.	0.
21	1.04642	SLV4-NL	NonStatic	Min	-318.654	-163.644	0.	0.
21	1.2557	SLV4-NL	NonStatic	Min	-308.474	-144.793	0.	0.
21	1.2557	SLV4-NL	NonStatic	Min	-308.474	-144.793	0.	0.
21	1.67427	SLV4-NL	NonStatic	Min	-289.227	-109.235	0.	0.

Table: Element Forces - Frames, Part 1 of 2

Frame	Station	OutputCase	CaseType	StepType	P	V2	V3	T
	m				KN	KN	KN	KN-m
21	1.67427	SLV4-NL	NonStatic	Min	-289.227	-109.234	0.	0.
21	2.09284	SLV4-NL	NonStatic	Min	-271.466	-76.534	0.	0.
21	0.	SLV5-NL	NonStatic	Max	-326.124	-269.057	0.	0.
21	0.41857	SLV5-NL	NonStatic	Max	-308.961	-221.399	0.	0.
21	0.41857	SLV5-NL	NonStatic	Max	-308.961	-221.399	0.	0.
21	0.83713	SLV5-NL	NonStatic	Max	-293.166	-176.793	0.	0.
21	0.83713	SLV5-NL	NonStatic	Max	-293.166	-176.793	0.	0.
21	1.04642	SLV5-NL	NonStatic	Max	-285.781	-155.634	0.	0.
21	1.2557	SLV5-NL	NonStatic	Max	-278.738	-135.239	0.	0.
21	1.2557	SLV5-NL	NonStatic	Max	-278.738	-135.239	0.	0.
21	1.67427	SLV5-NL	NonStatic	Max	-265.677	-96.738	0.	0.
21	1.67427	SLV5-NL	NonStatic	Max	-265.677	-96.738	0.	0.
21	2.09284	SLV5-NL	NonStatic	Max	-253.983	-61.288	0.	0.
21	0.	SLV5-NL	NonStatic	Min	-326.124	-269.057	0.	0.
21	0.41857	SLV5-NL	NonStatic	Min	-308.961	-221.399	0.	0.
21	0.41857	SLV5-NL	NonStatic	Min	-308.961	-221.399	0.	0.
21	0.83713	SLV5-NL	NonStatic	Min	-293.166	-176.793	0.	0.
21	0.83713	SLV5-NL	NonStatic	Min	-293.166	-176.793	0.	0.
21	1.04642	SLV5-NL	NonStatic	Min	-285.781	-155.634	0.	0.
21	1.2557	SLV5-NL	NonStatic	Min	-278.738	-135.239	0.	0.
21	1.2557	SLV5-NL	NonStatic	Min	-278.738	-135.239	0.	0.
21	1.67427	SLV5-NL	NonStatic	Min	-265.677	-96.738	0.	0.
21	1.67427	SLV5-NL	NonStatic	Min	-265.677	-96.738	0.	0.
21	2.09284	SLV5-NL	NonStatic	Min	-253.983	-61.288	0.	0.
21	0.	SLV6-NL	NonStatic	Max	-332.364	-273.669	0.	0.
21	0.41857	SLV6-NL	NonStatic	Max	-312.303	-227.829	0.	0.
21	0.41857	SLV6-NL	NonStatic	Max	-312.303	-227.829	0.	0.
21	0.83713	SLV6-NL	NonStatic	Max	-293.688	-184.992	0.	0.
21	0.83713	SLV6-NL	NonStatic	Max	-293.688	-184.992	0.	0.
21	1.04642	SLV6-NL	NonStatic	Max	-284.923	-164.699	0.	0.
21	1.2557	SLV6-NL	NonStatic	Max	-276.52	-145.157	0.	0.
21	1.2557	SLV6-NL	NonStatic	Max	-276.52	-145.157	0.	0.
21	1.67427	SLV6-NL	NonStatic	Max	-260.799	-108.324	0.	0.
21	1.67427	SLV6-NL	NonStatic	Max	-260.799	-108.324	0.	0.
21	2.09284	SLV6-NL	NonStatic	Max	-246.525	-74.494	0.	0.
21	0.	SLV6-NL	NonStatic	Min	-332.364	-273.669	0.	0.
21	0.41857	SLV6-NL	NonStatic	Min	-312.303	-227.829	0.	0.
21	0.41857	SLV6-NL	NonStatic	Min	-312.303	-227.829	0.	0.
21	0.83713	SLV6-NL	NonStatic	Min	-293.688	-184.992	0.	0.
21	0.83713	SLV6-NL	NonStatic	Min	-293.688	-184.992	0.	0.
21	1.04642	SLV6-NL	NonStatic	Min	-284.923	-164.699	0.	0.
21	1.2557	SLV6-NL	NonStatic	Min	-276.52	-145.157	0.	0.
21	1.2557	SLV6-NL	NonStatic	Min	-276.52	-145.157	0.	0.
21	1.67427	SLV6-NL	NonStatic	Min	-260.799	-108.324	0.	0.
21	1.67427	SLV6-NL	NonStatic	Min	-260.799	-108.324	0.	0.
21	2.09284	SLV6-NL	NonStatic	Min	-246.525	-74.494	0.	0.
21	0.	SLV7-NL	NonStatic	Max	-337.58	-279.499	0.	0.
21	0.41857	SLV7-NL	NonStatic	Max	-320.017	-231.203	0.	0.
21	0.41857	SLV7-NL	NonStatic	Max	-320.017	-231.203	0.	0.
21	0.83713	SLV7-NL	NonStatic	Max	-303.739	-185.827	0.	0.
21	0.83713	SLV7-NL	NonStatic	Max	-303.739	-185.827	0.	0.
21	1.04642	SLV7-NL	NonStatic	Max	-296.081	-164.234	0.	0.
21	1.2557	SLV7-NL	NonStatic	Max	-288.744	-143.37	0.	0.
21	1.2557	SLV7-NL	NonStatic	Max	-288.744	-143.37	0.	0.

Table: Element Forces - Frames, Part 1 of 2

Frame	Station	OutputCase	CaseType	StepType	P	V2	V3	T
	m				KN	KN	KN	KN-m
21	1.67427	SLV7-NL	NonStatic	Max	-275.034	-103.833	0.	0.
21	1.67427	SLV7-NL	NonStatic	Max	-275.034	-103.833	0.	0.
21	2.09284	SLV7-NL	NonStatic	Max	-262.607	-67.216	0.	0.
21	0.	SLV7-NL	NonStatic	Min	-337.58	-279.499	0.	0.
21	0.41857	SLV7-NL	NonStatic	Min	-320.017	-231.203	0.	0.
21	0.41857	SLV7-NL	NonStatic	Min	-320.017	-231.203	0.	0.
21	0.83713	SLV7-NL	NonStatic	Min	-303.739	-185.827	0.	0.
21	0.83713	SLV7-NL	NonStatic	Min	-303.739	-185.827	0.	0.
21	1.04642	SLV7-NL	NonStatic	Min	-296.081	-164.234	0.	0.
21	1.2557	SLV7-NL	NonStatic	Min	-288.744	-143.37	0.	0.
21	1.2557	SLV7-NL	NonStatic	Min	-288.744	-143.37	0.	0.
21	1.67427	SLV7-NL	NonStatic	Min	-275.034	-103.833	0.	0.
21	1.67427	SLV7-NL	NonStatic	Min	-275.034	-103.833	0.	0.
21	2.09284	SLV7-NL	NonStatic	Min	-262.607	-67.216	0.	0.
21	0.	SLV8-NL	NonStatic	Max	-343.81	-284.094	0.	0.
21	0.41857	SLV8-NL	NonStatic	Max	-323.348	-237.617	0.	0.
21	0.41857	SLV8-NL	NonStatic	Max	-323.348	-237.617	0.	0.
21	0.83713	SLV8-NL	NonStatic	Max	-304.251	-194.009	0.	0.
21	0.83713	SLV8-NL	NonStatic	Max	-304.251	-194.009	0.	0.
21	1.04642	SLV8-NL	NonStatic	Max	-295.213	-173.282	0.	0.
21	1.2557	SLV8-NL	NonStatic	Max	-286.516	-153.272	0.	0.
21	1.2557	SLV8-NL	NonStatic	Max	-286.516	-153.272	0.	0.
21	1.67427	SLV8-NL	NonStatic	Max	-270.146	-115.403	0.	0.
21	1.67427	SLV8-NL	NonStatic	Max	-270.146	-115.403	0.	0.
21	2.09284	SLV8-NL	NonStatic	Max	-255.139	-80.405	0.	0.
21	0.	SLV8-NL	NonStatic	Min	-343.81	-284.094	0.	0.
21	0.41857	SLV8-NL	NonStatic	Min	-323.348	-237.617	0.	0.
21	0.41857	SLV8-NL	NonStatic	Min	-323.348	-237.617	0.	0.
21	0.83713	SLV8-NL	NonStatic	Min	-304.251	-194.009	0.	0.
21	0.83713	SLV8-NL	NonStatic	Min	-304.251	-194.009	0.	0.
21	1.04642	SLV8-NL	NonStatic	Min	-295.213	-173.282	0.	0.
21	1.2557	SLV8-NL	NonStatic	Min	-286.516	-153.272	0.	0.
21	1.2557	SLV8-NL	NonStatic	Min	-286.516	-153.272	0.	0.
21	1.67427	SLV8-NL	NonStatic	Min	-270.146	-115.403	0.	0.
21	1.67427	SLV8-NL	NonStatic	Min	-270.146	-115.403	0.	0.
21	2.09284	SLV8-NL	NonStatic	Min	-255.139	-80.405	0.	0.
21	0.	SLV9-NL	NonStatic	Max	-346.414	-258.956	0.	0.
21	0.41857	SLV9-NL	NonStatic	Max	-330.209	-210.913	0.	0.
21	0.41857	SLV9-NL	NonStatic	Max	-330.209	-210.913	0.	0.
21	0.83713	SLV9-NL	NonStatic	Max	-315.49	-165.728	0.	0.
21	0.83713	SLV9-NL	NonStatic	Max	-315.49	-165.728	0.	0.
21	1.04642	SLV9-NL	NonStatic	Max	-308.688	-144.207	0.	0.
21	1.2557	SLV9-NL	NonStatic	Max	-302.257	-123.4	0.	0.
21	1.2557	SLV9-NL	NonStatic	Max	-302.257	-123.401	0.	0.
21	1.67427	SLV9-NL	NonStatic	Max	-290.509	-83.931	0.	0.
21	1.67427	SLV9-NL	NonStatic	Max	-290.509	-83.931	0.	0.
21	2.09284	SLV9-NL	NonStatic	Max	-280.247	-47.319	0.	0.
21	0.	SLV9-NL	NonStatic	Min	-346.414	-258.956	0.	0.
21	0.41857	SLV9-NL	NonStatic	Min	-330.209	-210.913	0.	0.
21	0.41857	SLV9-NL	NonStatic	Min	-330.209	-210.913	0.	0.
21	0.83713	SLV9-NL	NonStatic	Min	-315.49	-165.728	0.	0.
21	0.83713	SLV9-NL	NonStatic	Min	-315.49	-165.728	0.	0.
21	1.04642	SLV9-NL	NonStatic	Min	-308.688	-144.207	0.	0.
21	1.2557	SLV9-NL	NonStatic	Min	-302.257	-123.4	0.	0.

Table: Element Forces - Frames, Part 1 of 2

Frame	Station	OutputCase	CaseType	StepType	P	V2	V3	T
	m				KN	KN	KN	KN-m
21	1.2557	SLV9-NL	NonStatic	Min	-302.257	-123.401	0.	0.
21	1.67427	SLV9-NL	NonStatic	Min	-290.509	-83.931	0.	0.
21	1.67427	SLV9-NL	NonStatic	Min	-290.509	-83.931	0.	0.
21	2.09284	SLV9-NL	NonStatic	Min	-280.247	-47.319	0.	0.
21	0.	SLV10-NL	NonStatic	Max	-323.653	-281.552	0.	0.
21	0.41857	SLV10-NL	NonStatic	Max	-302.828	-236.407	0.	0.
21	0.41857	SLV10-NL	NonStatic	Max	-302.828	-236.407	0.	0.
21	0.83713	SLV10-NL	NonStatic	Max	-283.224	-194.287	0.	0.
21	0.83713	SLV10-NL	NonStatic	Max	-283.224	-194.287	0.	0.
21	1.04642	SLV10-NL	NonStatic	Max	-273.879	-174.361	0.	0.
21	1.2557	SLV10-NL	NonStatic	Max	-264.839	-155.191	0.	0.
21	1.2557	SLV10-NL	NonStatic	Max	-264.839	-155.191	0.	0.
21	1.67427	SLV10-NL	NonStatic	Max	-247.675	-119.119	0.	0.
21	1.67427	SLV10-NL	NonStatic	Max	-247.675	-119.119	0.	0.
21	2.09284	SLV10-NL	NonStatic	Max	-231.731	-86.072	0.	0.
21	0.	SLV10-NL	NonStatic	Min	-323.653	-281.552	0.	0.
21	0.41857	SLV10-NL	NonStatic	Min	-302.828	-236.407	0.	0.
21	0.41857	SLV10-NL	NonStatic	Min	-302.828	-236.407	0.	0.
21	0.83713	SLV10-NL	NonStatic	Min	-283.224	-194.287	0.	0.
21	0.83713	SLV10-NL	NonStatic	Min	-283.224	-194.287	0.	0.
21	1.04642	SLV10-NL	NonStatic	Min	-273.879	-174.361	0.	0.
21	1.2557	SLV10-NL	NonStatic	Min	-264.839	-155.191	0.	0.
21	1.2557	SLV10-NL	NonStatic	Min	-264.839	-155.191	0.	0.
21	1.67427	SLV10-NL	NonStatic	Min	-247.675	-119.119	0.	0.
21	1.67427	SLV10-NL	NonStatic	Min	-247.675	-119.119	0.	0.
21	2.09284	SLV10-NL	NonStatic	Min	-231.731	-86.072	0.	0.
21	0.	SLV11-NL	NonStatic	Max	-351.655	-268.18	0.	0.
21	0.41857	SLV11-NL	NonStatic	Max	-334.856	-219.189	0.	0.
21	0.41857	SLV11-NL	NonStatic	Max	-334.856	-219.189	0.	0.
21	0.83713	SLV11-NL	NonStatic	Max	-319.567	-173.096	0.	0.
21	0.83713	SLV11-NL	NonStatic	Max	-319.567	-173.096	0.	0.
21	1.04642	SLV11-NL	NonStatic	Max	-312.489	-151.136	0.	0.
21	1.2557	SLV11-NL	NonStatic	Max	-305.789	-129.901	0.	0.
21	1.2557	SLV11-NL	NonStatic	Max	-305.789	-129.901	0.	0.
21	1.67427	SLV11-NL	NonStatic	Max	-293.522	-89.603	0.	0.
21	1.67427	SLV11-NL	NonStatic	Max	-293.522	-89.603	0.	0.
21	2.09284	SLV11-NL	NonStatic	Max	-282.765	-52.203	0.	0.
21	0.	SLV11-NL	NonStatic	Min	-351.655	-268.18	0.	0.
21	0.41857	SLV11-NL	NonStatic	Min	-334.856	-219.189	0.	0.
21	0.41857	SLV11-NL	NonStatic	Min	-334.856	-219.189	0.	0.
21	0.83713	SLV11-NL	NonStatic	Min	-319.567	-173.096	0.	0.
21	0.83713	SLV11-NL	NonStatic	Min	-319.567	-173.096	0.	0.
21	1.04642	SLV11-NL	NonStatic	Min	-312.489	-151.136	0.	0.
21	1.2557	SLV11-NL	NonStatic	Min	-305.789	-129.901	0.	0.
21	1.2557	SLV11-NL	NonStatic	Min	-305.789	-129.901	0.	0.
21	1.67427	SLV11-NL	NonStatic	Min	-293.522	-89.603	0.	0.
21	1.67427	SLV11-NL	NonStatic	Min	-293.522	-89.603	0.	0.
21	2.09284	SLV11-NL	NonStatic	Min	-282.765	-52.203	0.	0.
21	0.	SLV12-NL	NonStatic	Max	-328.882	-290.757	0.	0.
21	0.41857	SLV12-NL	NonStatic	Max	-307.463	-244.665	0.	0.
21	0.41857	SLV12-NL	NonStatic	Max	-307.463	-244.665	0.	0.
21	0.83713	SLV12-NL	NonStatic	Max	-287.289	-201.637	0.	0.
21	0.83713	SLV12-NL	NonStatic	Max	-287.289	-201.637	0.	0.
21	1.04642	SLV12-NL	NonStatic	Max	-277.669	-181.272	0.	0.

Table: Element Forces - Frames, Part 1 of 2

Frame	Station	OutputCase	CaseType	StepType	P	V2	V3	T
	m				KN	KN	KN	KN-m
21	1.2557	SLV12-NL	NonStatic	Max	-268.36	-161.673	0.	0.
21	1.2557	SLV12-NL	NonStatic	Max	-268.36	-161.673	0.	0.
21	1.67427	SLV12-NL	NonStatic	Max	-250.676	-124.773	0.	0.
21	1.67427	SLV12-NL	NonStatic	Max	-250.676	-124.773	0.	0.
21	2.09284	SLV12-NL	NonStatic	Max	-234.238	-90.937	0.	0.
21	0.	SLV12-NL	NonStatic	Min	-328.882	-290.757	0.	0.
21	0.41857	SLV12-NL	NonStatic	Min	-307.463	-244.665	0.	0.
21	0.41857	SLV12-NL	NonStatic	Min	-307.463	-244.665	0.	0.
21	0.83713	SLV12-NL	NonStatic	Min	-287.289	-201.637	0.	0.
21	0.83713	SLV12-NL	NonStatic	Min	-287.289	-201.637	0.	0.
21	1.04642	SLV12-NL	NonStatic	Min	-277.669	-181.272	0.	0.
21	1.2557	SLV12-NL	NonStatic	Min	-268.36	-161.673	0.	0.
21	1.2557	SLV12-NL	NonStatic	Min	-268.36	-161.673	0.	0.
21	1.67427	SLV12-NL	NonStatic	Min	-250.676	-124.773	0.	0.
21	1.67427	SLV12-NL	NonStatic	Min	-250.676	-124.773	0.	0.
21	2.09284	SLV12-NL	NonStatic	Min	-234.238	-90.937	0.	0.
21	0.	SLV13-NL	NonStatic	Max	-322.159	-262.648	0.	0.
21	0.41857	SLV13-NL	NonStatic	Max	-305.031	-216.725	0.	0.
21	0.41857	SLV13-NL	NonStatic	Max	-305.031	-216.725	0.	0.
21	0.83713	SLV13-NL	NonStatic	Max	-289.267	-173.672	0.	0.
21	0.83713	SLV13-NL	NonStatic	Max	-289.267	-173.672	0.	0.
21	1.04642	SLV13-NL	NonStatic	Max	-281.896	-153.221	0.	0.
21	1.2557	SLV13-NL	NonStatic	Max	-274.866	-133.488	0.	0.
21	1.2557	SLV13-NL	NonStatic	Max	-274.866	-133.488	0.	0.
21	1.67427	SLV13-NL	NonStatic	Max	-261.828	-96.174	0.	0.
21	1.67427	SLV13-NL	NonStatic	Max	-261.828	-96.174	0.	0.
21	2.09284	SLV13-NL	NonStatic	Max	-250.155	-61.73	0.	0.
21	0.	SLV13-NL	NonStatic	Min	-322.159	-262.648	0.	0.
21	0.41857	SLV13-NL	NonStatic	Min	-305.031	-216.725	0.	0.
21	0.41857	SLV13-NL	NonStatic	Min	-305.031	-216.725	0.	0.
21	0.83713	SLV13-NL	NonStatic	Min	-289.267	-173.672	0.	0.
21	0.83713	SLV13-NL	NonStatic	Min	-289.267	-173.672	0.	0.
21	1.04642	SLV13-NL	NonStatic	Min	-281.896	-153.221	0.	0.
21	1.2557	SLV13-NL	NonStatic	Min	-274.866	-133.488	0.	0.
21	1.2557	SLV13-NL	NonStatic	Min	-274.866	-133.488	0.	0.
21	1.67427	SLV13-NL	NonStatic	Min	-261.828	-96.174	0.	0.
21	1.67427	SLV13-NL	NonStatic	Min	-261.828	-96.174	0.	0.
21	2.09284	SLV13-NL	NonStatic	Min	-250.155	-61.73	0.	0.
21	0.	SLV14-NL	NonStatic	Max	-315.457	-269.097	0.	0.
21	0.41857	SLV14-NL	NonStatic	Max	-296.943	-224.044	0.	0.
21	0.41857	SLV14-NL	NonStatic	Max	-296.943	-224.044	0.	0.
21	0.83713	SLV14-NL	NonStatic	Max	-279.713	-181.91	0.	0.
21	0.83713	SLV14-NL	NonStatic	Max	-279.713	-181.91	0.	0.
21	1.04642	SLV14-NL	NonStatic	Max	-271.579	-161.938	0.	0.
21	1.2557	SLV14-NL	NonStatic	Max	-263.767	-142.696	0.	0.
21	1.2557	SLV14-NL	NonStatic	Max	-263.767	-142.696	0.	0.
21	1.67427	SLV14-NL	NonStatic	Max	-249.104	-106.401	0.	0.
21	1.67427	SLV14-NL	NonStatic	Max	-249.104	-106.401	0.	0.
21	2.09284	SLV14-NL	NonStatic	Max	-235.726	-73.026	0.	0.
21	0.	SLV14-NL	NonStatic	Min	-315.457	-269.097	0.	0.
21	0.41857	SLV14-NL	NonStatic	Min	-296.943	-224.044	0.	0.
21	0.41857	SLV14-NL	NonStatic	Min	-296.943	-224.044	0.	0.
21	0.83713	SLV14-NL	NonStatic	Min	-279.713	-181.91	0.	0.
21	0.83713	SLV14-NL	NonStatic	Min	-279.713	-181.91	0.	0.

Table: Element Forces - Frames, Part 1 of 2

Frame	Station	OutputCase	CaseType	StepType	P	V2	V3	T
	m				KN	KN	KN	KN-m
21	1.04642	SLV14-NL	NonStatic	Min	-271.579	-161.938	0.	0.
21	1.2557	SLV14-NL	NonStatic	Min	-263.767	-142.696	0.	0.
21	1.2557	SLV14-NL	NonStatic	Min	-263.767	-142.696	0.	0.
21	1.67427	SLV14-NL	NonStatic	Min	-249.104	-106.401	0.	0.
21	1.67427	SLV14-NL	NonStatic	Min	-249.104	-106.401	0.	0.
21	2.09284	SLV14-NL	NonStatic	Min	-235.726	-73.026	0.	0.
21	0.	SLV15-NL	NonStatic	Max	-340.131	-293.129	0.	0.
21	0.41857	SLV15-NL	NonStatic	Max	-321.021	-244.047	0.	0.
21	0.41857	SLV15-NL	NonStatic	Max	-321.021	-244.047	0.	0.
21	0.83713	SLV15-NL	NonStatic	Max	-303.358	-197.968	0.	0.
21	0.83713	SLV15-NL	NonStatic	Max	-303.358	-197.968	0.	0.
21	1.04642	SLV15-NL	NonStatic	Max	-295.069	-176.054	0.	0.
21	1.2557	SLV15-NL	NonStatic	Max	-287.142	-154.89	0.	0.
21	1.2557	SLV15-NL	NonStatic	Max	-287.142	-154.89	0.	0.
21	1.67427	SLV15-NL	NonStatic	Max	-272.372	-114.815	0.	0.
21	1.67427	SLV15-NL	NonStatic	Max	-272.372	-114.815	0.	0.
21	2.09284	SLV15-NL	NonStatic	Max	-259.05	-77.743	0.	0.
21	0.	SLV15-NL	NonStatic	Min	-340.131	-293.129	0.	0.
21	0.41857	SLV15-NL	NonStatic	Min	-321.021	-244.047	0.	0.
21	0.41857	SLV15-NL	NonStatic	Min	-321.021	-244.047	0.	0.
21	0.83713	SLV15-NL	NonStatic	Min	-303.358	-197.968	0.	0.
21	0.83713	SLV15-NL	NonStatic	Min	-303.358	-197.968	0.	0.
21	1.04642	SLV15-NL	NonStatic	Min	-295.069	-176.054	0.	0.
21	1.2557	SLV15-NL	NonStatic	Min	-287.142	-154.89	0.	0.
21	1.2557	SLV15-NL	NonStatic	Min	-287.142	-154.89	0.	0.
21	1.67427	SLV15-NL	NonStatic	Min	-272.372	-114.815	0.	0.
21	1.67427	SLV15-NL	NonStatic	Min	-272.372	-114.815	0.	0.
21	2.09284	SLV15-NL	NonStatic	Min	-259.05	-77.743	0.	0.
21	0.	SLV16-NL	NonStatic	Max	-333.525	-299.345	0.	0.
21	0.41857	SLV16-NL	NonStatic	Max	-313.029	-251.133	0.	0.
21	0.41857	SLV16-NL	NonStatic	Max	-313.029	-251.133	0.	0.
21	0.83713	SLV16-NL	NonStatic	Max	-293.901	-205.973	0.	0.
21	0.83713	SLV16-NL	NonStatic	Max	-293.901	-205.973	0.	0.
21	1.04642	SLV16-NL	NonStatic	Max	-284.849	-184.537	0.	0.
21	1.2557	SLV16-NL	NonStatic	Max	-276.139	-163.865	0.	0.
21	1.2557	SLV16-NL	NonStatic	Max	-276.139	-163.865	0.	0.
21	1.67427	SLV16-NL	NonStatic	Max	-259.745	-124.81	0.	0.
21	1.67427	SLV16-NL	NonStatic	Max	-259.745	-124.81	0.	0.
21	2.09284	SLV16-NL	NonStatic	Max	-244.718	-88.806	0.	0.
21	0.	SLV16-NL	NonStatic	Min	-333.525	-299.345	0.	0.
21	0.41857	SLV16-NL	NonStatic	Min	-313.029	-251.133	0.	0.
21	0.41857	SLV16-NL	NonStatic	Min	-313.029	-251.133	0.	0.
21	0.83713	SLV16-NL	NonStatic	Min	-293.901	-205.973	0.	0.
21	0.83713	SLV16-NL	NonStatic	Min	-293.901	-205.973	0.	0.
21	1.04642	SLV16-NL	NonStatic	Min	-284.849	-184.537	0.	0.
21	1.2557	SLV16-NL	NonStatic	Min	-276.139	-163.865	0.	0.
21	1.2557	SLV16-NL	NonStatic	Min	-276.139	-163.865	0.	0.
21	1.67427	SLV16-NL	NonStatic	Min	-259.745	-124.81	0.	0.
21	1.67427	SLV16-NL	NonStatic	Min	-259.745	-124.81	0.	0.
21	2.09284	SLV16-NL	NonStatic	Min	-244.718	-88.806	0.	0.
26	0.	SLU 1-NL	NonStatic	Max	-373.373	-155.96	0.	0.
26	0.23028	SLU 1-NL	NonStatic	Max	-364.117	-125.796	0.	0.
26	0.46056	SLU 1-NL	NonStatic	Max	-355.	-96.159	0.	0.
26	0.	SLU 1-NL	NonStatic	Min	-373.373	-155.96	0.	0.

Table: Element Forces - Frames, Part 1 of 2

Frame	Station	OutputCase	CaseType	StepType	P	V2	V3	T
	m				KN	KN	KN	KN-m
26	0.23028	SLU 1-NL	NonStatic	Min	-364.117	-125.796	0.	0.
26	0.46056	SLU 1-NL	NonStatic	Min	-355.	-96.159	0.	0.
26	0.	SLU 2-NL	NonStatic	Max	-290.611	-198.129	0.	0.
26	0.23028	SLU 2-NL	NonStatic	Max	-279.319	-169.002	0.	0.
26	0.46056	SLU 2-NL	NonStatic	Max	-268.19	-140.391	0.	0.
26	0.	SLU 2-NL	NonStatic	Min	-290.611	-198.129	0.	0.
26	0.23028	SLU 2-NL	NonStatic	Min	-279.319	-169.002	0.	0.
26	0.46056	SLU 2-NL	NonStatic	Min	-268.19	-140.391	0.	0.
26	0.	SLU 3-NL	NonStatic	Max	-311.936	-50.391	0.	0.
26	0.23028	SLU 3-NL	NonStatic	Max	-308.085	-30.836	0.	0.
26	0.46056	SLU 3-NL	NonStatic	Max	-304.317	-11.699	0.	0.
26	0.	SLU 3-NL	NonStatic	Min	-311.936	-50.391	0.	0.
26	0.23028	SLU 3-NL	NonStatic	Min	-308.085	-30.836	0.	0.
26	0.46056	SLU 3-NL	NonStatic	Min	-304.317	-11.699	0.	0.
26	0.	SLU 4-NL	NonStatic	Max	-356.326	-154.712	0.	0.
26	0.23028	SLU 4-NL	NonStatic	Max	-347.07	-124.548	0.	0.
26	0.46056	SLU 4-NL	NonStatic	Max	-337.952	-94.911	0.	0.
26	0.	SLU 4-NL	NonStatic	Min	-356.326	-154.712	0.	0.
26	0.23028	SLU 4-NL	NonStatic	Min	-347.07	-124.548	0.	0.
26	0.46056	SLU 4-NL	NonStatic	Min	-337.952	-94.911	0.	0.
26	0.	SLU 5-NL	NonStatic	Max	-300.61	-45.921	0.	0.
26	0.23028	SLU 5-NL	NonStatic	Max	-296.759	-26.366	0.	0.
26	0.46056	SLU 5-NL	NonStatic	Max	-292.991	-7.229	0.	0.
26	0.	SLU 5-NL	NonStatic	Min	-300.61	-45.921	0.	0.
26	0.23028	SLU 5-NL	NonStatic	Min	-296.759	-26.366	0.	0.
26	0.46056	SLU 5-NL	NonStatic	Min	-292.991	-7.229	0.	0.
26	0.	SLU 6-NL	NonStatic	Max	-375.502	-164.81	0.	0.
26	0.23028	SLU 6-NL	NonStatic	Max	-364.21	-135.683	0.	0.
26	0.46056	SLU 6-NL	NonStatic	Max	-353.08	-107.071	0.	0.
26	0.	SLU 6-NL	NonStatic	Min	-375.502	-164.81	0.	0.
26	0.23028	SLU 6-NL	NonStatic	Min	-364.21	-135.683	0.	0.
26	0.46056	SLU 6-NL	NonStatic	Min	-353.08	-107.071	0.	0.
26	0.	SLU 7-NL	NonStatic	Max	-320.034	-56.506	0.	0.
26	0.23028	SLU 7-NL	NonStatic	Max	-314.147	-37.989	0.	0.
26	0.46056	SLU 7-NL	NonStatic	Max	-308.368	-19.877	0.	0.
26	0.	SLU 7-NL	NonStatic	Min	-320.034	-56.506	0.	0.
26	0.23028	SLU 7-NL	NonStatic	Min	-314.147	-37.989	0.	0.
26	0.46056	SLU 7-NL	NonStatic	Min	-308.368	-19.877	0.	0.
26	0.	SLE-C-NL	NonStatic	Max	-279.442	-116.33	0.	0.
26	0.23028	SLE-C-NL	NonStatic	Max	-272.486	-93.752	0.	0.
26	0.46056	SLE-C-NL	NonStatic	Max	-265.637	-71.579	0.	0.
26	0.	SLE-C-NL	NonStatic	Min	-279.442	-116.33	0.	0.
26	0.23028	SLE-C-NL	NonStatic	Min	-272.486	-93.752	0.	0.
26	0.46056	SLE-C-NL	NonStatic	Min	-265.637	-71.579	0.	0.
26	0.	SLE-F-1-NL	NonStatic	Max	-249.551	-121.684	0.	0.
26	0.23028	SLE-F-1-NL	NonStatic	Max	-242.174	-100.241	0.	0.
26	0.46056	SLE-F-1-NL	NonStatic	Max	-234.904	-79.204	0.	0.
26	0.	SLE-F-1-NL	NonStatic	Min	-249.551	-121.684	0.	0.
26	0.23028	SLE-F-1-NL	NonStatic	Min	-242.174	-100.241	0.	0.
26	0.46056	SLE-F-1-NL	NonStatic	Min	-234.904	-79.204	0.	0.
26	0.	SLE-F-2-NL	NonStatic	Max	-241.833	-82.728	0.	0.
26	0.23028	SLE-F-2-NL	NonStatic	Max	-236.582	-63.887	0.	0.
26	0.46056	SLE-F-2-NL	NonStatic	Max	-231.437	-45.452	0.	0.
26	0.	SLE-F-2-NL	NonStatic	Min	-241.833	-82.728	0.	0.

Table: Element Forces - Frames, Part 1 of 2

Frame	Station	OutputCase	CaseType	StepType	P	V2	V3	T
	m				KN	KN	KN	KN-m
26	0.23028	SLE-F-2-NL	NonStatic	Min	-236.582	-63.887	0.	0.
26	0.46056	SLE-F-2-NL	NonStatic	Min	-231.437	-45.452	0.	0.
26	0.	SLE-F-3-NL	NonStatic	Max	-248.149	-86.274	0.	0.
26	0.23028	SLE-F-3-NL	NonStatic	Max	-242.263	-67.756	0.	0.
26	0.46056	SLE-F-3-NL	NonStatic	Max	-236.483	-49.645	0.	0.
26	0.	SLE-F-3-NL	NonStatic	Min	-248.149	-86.274	0.	0.
26	0.23028	SLE-F-3-NL	NonStatic	Min	-242.263	-67.756	0.	0.
26	0.46056	SLE-F-3-NL	NonStatic	Min	-236.483	-49.645	0.	0.
26	0.	SLE-QP-NL	NonStatic	Max	-229.167	-92.564	0.	0.
26	0.23028	SLE-QP-NL	NonStatic	Max	-223.28	-74.046	0.	0.
26	0.46056	SLE-QP-NL	NonStatic	Max	-217.501	-55.935	0.	0.
26	0.	SLE-QP-NL	NonStatic	Min	-229.167	-92.564	0.	0.
26	0.23028	SLE-QP-NL	NonStatic	Min	-223.28	-74.046	0.	0.
26	0.46056	SLE-QP-NL	NonStatic	Min	-217.501	-55.935	0.	0.
26	0.	SLV1-NL	NonStatic	Max	-289.526	-56.115	0.	0.
26	0.23028	SLV1-NL	NonStatic	Max	-285.634	-35.805	0.	0.
26	0.46056	SLV1-NL	NonStatic	Max	-281.849	-15.902	0.	0.
26	0.	SLV1-NL	NonStatic	Min	-289.526	-56.115	0.	0.
26	0.23028	SLV1-NL	NonStatic	Min	-285.634	-35.805	0.	0.
26	0.46056	SLV1-NL	NonStatic	Min	-281.849	-15.902	0.	0.
26	0.	SLV2-NL	NonStatic	Max	-261.167	-98.378	0.	0.
26	0.23028	SLV2-NL	NonStatic	Max	-252.976	-80.259	0.	0.
26	0.46056	SLV2-NL	NonStatic	Max	-244.893	-62.546	0.	0.
26	0.	SLV2-NL	NonStatic	Min	-261.167	-98.378	0.	0.
26	0.23028	SLV2-NL	NonStatic	Min	-252.976	-80.259	0.	0.
26	0.46056	SLV2-NL	NonStatic	Min	-244.893	-62.546	0.	0.
26	0.	SLV3-NL	NonStatic	Max	-291.944	-58.115	0.	0.
26	0.23028	SLV3-NL	NonStatic	Max	-287.934	-37.574	0.	0.
26	0.46056	SLV3-NL	NonStatic	Max	-284.03	-17.44	0.	0.
26	0.	SLV3-NL	NonStatic	Min	-291.944	-58.115	0.	0.
26	0.23028	SLV3-NL	NonStatic	Min	-287.934	-37.574	0.	0.
26	0.46056	SLV3-NL	NonStatic	Min	-284.03	-17.44	0.	0.
26	0.	SLV4-NL	NonStatic	Max	-263.583	-100.376	0.	0.
26	0.23028	SLV4-NL	NonStatic	Max	-255.274	-82.025	0.	0.
26	0.46056	SLV4-NL	NonStatic	Max	-247.073	-64.08	0.	0.
26	0.	SLV4-NL	NonStatic	Min	-263.583	-100.376	0.	0.
26	0.23028	SLV4-NL	NonStatic	Min	-255.274	-82.025	0.	0.
26	0.46056	SLV4-NL	NonStatic	Min	-247.073	-64.08	0.	0.
26	0.	SLV5-NL	NonStatic	Max	-247.525	-83.636	0.	0.
26	0.23028	SLV5-NL	NonStatic	Max	-242.266	-64.363	0.	0.
26	0.46056	SLV5-NL	NonStatic	Max	-237.114	-45.496	0.	0.
26	0.	SLV5-NL	NonStatic	Min	-247.525	-83.636	0.	0.
26	0.23028	SLV5-NL	NonStatic	Min	-242.266	-64.363	0.	0.
26	0.46056	SLV5-NL	NonStatic	Min	-237.114	-45.496	0.	0.
26	0.	SLV6-NL	NonStatic	Max	-238.922	-96.126	0.	0.
26	0.23028	SLV6-NL	NonStatic	Max	-232.374	-77.51	0.	0.
26	0.46056	SLV6-NL	NonStatic	Max	-225.932	-59.3	0.	0.
26	0.	SLV6-NL	NonStatic	Min	-238.922	-96.126	0.	0.
26	0.23028	SLV6-NL	NonStatic	Min	-232.374	-77.51	0.	0.
26	0.46056	SLV6-NL	NonStatic	Min	-225.932	-59.3	0.	0.
26	0.	SLV7-NL	NonStatic	Max	-255.588	-90.307	0.	0.
26	0.23028	SLV7-NL	NonStatic	Max	-249.935	-70.263	0.	0.
26	0.46056	SLV7-NL	NonStatic	Max	-244.39	-50.625	0.	0.
26	0.	SLV7-NL	NonStatic	Min	-255.588	-90.307	0.	0.

Table: Element Forces - Frames, Part 1 of 2

Frame	Station	OutputCase	CaseType	StepType	P	V2	V3	T
	m				KN	KN	KN	KN-m
26	0.23028	SLV7-NL	NonStatic	Min	-249.935	-70.263	0.	0.
26	0.46056	SLV7-NL	NonStatic	Min	-244.39	-50.625	0.	0.
26	0.	SLV8-NL	NonStatic	Max	-246.976	-102.779	0.	0.
26	0.23028	SLV8-NL	NonStatic	Max	-240.034	-83.392	0.	0.
26	0.46056	SLV8-NL	NonStatic	Max	-233.199	-64.411	0.	0.
26	0.	SLV8-NL	NonStatic	Min	-246.976	-102.779	0.	0.
26	0.23028	SLV8-NL	NonStatic	Min	-240.034	-83.392	0.	0.
26	0.46056	SLV8-NL	NonStatic	Min	-233.199	-64.411	0.	0.
26	0.	SLV9-NL	NonStatic	Max	-274.927	-72.058	0.	0.
26	0.23028	SLV9-NL	NonStatic	Max	-270.326	-52.255	0.	0.
26	0.46056	SLV9-NL	NonStatic	Max	-265.831	-32.858	0.	0.
26	0.	SLV9-NL	NonStatic	Min	-274.927	-72.058	0.	0.
26	0.23028	SLV9-NL	NonStatic	Min	-270.326	-52.255	0.	0.
26	0.46056	SLV9-NL	NonStatic	Min	-265.831	-32.858	0.	0.
26	0.	SLV10-NL	NonStatic	Max	-223.157	-106.342	0.	0.
26	0.23028	SLV10-NL	NonStatic	Max	-215.793	-87.947	0.	0.
26	0.46056	SLV10-NL	NonStatic	Max	-208.536	-69.958	0.	0.
26	0.	SLV10-NL	NonStatic	Min	-223.157	-106.342	0.	0.
26	0.23028	SLV10-NL	NonStatic	Min	-215.793	-87.947	0.	0.
26	0.46056	SLV10-NL	NonStatic	Min	-208.536	-69.958	0.	0.
26	0.	SLV11-NL	NonStatic	Max	-277.001	-77.146	0.	0.
26	0.23028	SLV11-NL	NonStatic	Max	-272.164	-56.882	0.	0.
26	0.46056	SLV11-NL	NonStatic	Max	-267.434	-37.023	0.	0.
26	0.	SLV11-NL	NonStatic	Min	-277.001	-77.146	0.	0.
26	0.23028	SLV11-NL	NonStatic	Min	-272.164	-56.882	0.	0.
26	0.46056	SLV11-NL	NonStatic	Min	-267.434	-37.023	0.	0.
26	0.	SLV12-NL	NonStatic	Max	-225.221	-111.411	0.	0.
26	0.23028	SLV12-NL	NonStatic	Max	-217.622	-92.554	0.	0.
26	0.46056	SLV12-NL	NonStatic	Max	-210.129	-74.103	0.	0.
26	0.	SLV12-NL	NonStatic	Min	-225.221	-111.411	0.	0.
26	0.23028	SLV12-NL	NonStatic	Min	-217.622	-92.554	0.	0.
26	0.46056	SLV12-NL	NonStatic	Min	-210.129	-74.103	0.	0.
26	0.	SLV13-NL	NonStatic	Max	-243.673	-83.735	0.	0.
26	0.23028	SLV13-NL	NonStatic	Max	-238.379	-64.963	0.	0.
26	0.46056	SLV13-NL	NonStatic	Max	-233.192	-46.598	0.	0.
26	0.	SLV13-NL	NonStatic	Min	-243.673	-83.735	0.	0.
26	0.23028	SLV13-NL	NonStatic	Min	-238.379	-64.963	0.	0.
26	0.46056	SLV13-NL	NonStatic	Min	-233.192	-46.598	0.	0.
26	0.	SLV14-NL	NonStatic	Max	-228.297	-93.703	0.	0.
26	0.23028	SLV14-NL	NonStatic	Max	-222.174	-75.354	0.	0.
26	0.46056	SLV14-NL	NonStatic	Max	-216.158	-57.411	0.	0.
26	0.	SLV14-NL	NonStatic	Min	-228.297	-93.703	0.	0.
26	0.23028	SLV14-NL	NonStatic	Min	-222.174	-75.354	0.	0.
26	0.46056	SLV14-NL	NonStatic	Min	-216.158	-57.411	0.	0.
26	0.	SLV15-NL	NonStatic	Max	-251.108	-100.476	0.	0.
26	0.23028	SLV15-NL	NonStatic	Max	-245.03	-80.165	0.	0.
26	0.46056	SLV15-NL	NonStatic	Max	-239.059	-60.26	0.	0.
26	0.	SLV15-NL	NonStatic	Min	-251.108	-100.476	0.	0.
26	0.23028	SLV15-NL	NonStatic	Min	-245.03	-80.165	0.	0.
26	0.46056	SLV15-NL	NonStatic	Min	-239.059	-60.26	0.	0.
26	0.	SLV16-NL	NonStatic	Max	-235.849	-110.221	0.	0.
26	0.23028	SLV16-NL	NonStatic	Max	-228.942	-90.332	0.	0.
26	0.46056	SLV16-NL	NonStatic	Max	-222.142	-70.85	0.	0.
26	0.	SLV16-NL	NonStatic	Min	-235.849	-110.221	0.	0.

Table: Element Forces - Frames, Part 1 of 2

Frame	Station	OutputCase	CaseType	StepType	P	V2	V3	T
	m				KN	KN	KN	KN-m
26	0.23028	SLV16-NL	NonStatic	Min	-228.942	-90.332	0.	0.
26	0.46056	SLV16-NL	NonStatic	Min	-222.142	-70.85	0.	0.
27	0.	SLU 1-NL	NonStatic	Max	-343.003	-132.74	0.	0.
27	0.23028	SLU 1-NL	NonStatic	Max	-335.68	-102.174	0.	0.
27	0.46056	SLU 1-NL	NonStatic	Max	-328.471	-72.163	0.	0.
27	0.	SLU 1-NL	NonStatic	Min	-343.003	-132.74	0.	0.
27	0.23028	SLU 1-NL	NonStatic	Min	-335.68	-102.174	0.	0.
27	0.46056	SLU 1-NL	NonStatic	Min	-328.471	-72.163	0.	0.
27	0.	SLU 2-NL	NonStatic	Max	-252.046	-167.655	0.	0.
27	0.23028	SLU 2-NL	NonStatic	Max	-243.078	-137.721	0.	0.
27	0.46056	SLU 2-NL	NonStatic	Max	-234.245	-108.334	0.	0.
27	0.	SLU 2-NL	NonStatic	Min	-252.046	-167.655	0.	0.
27	0.23028	SLU 2-NL	NonStatic	Min	-243.078	-137.721	0.	0.
27	0.46056	SLU 2-NL	NonStatic	Min	-234.245	-108.334	0.	0.
27	0.	SLU 3-NL	NonStatic	Max	-301.427	-43.445	0.	0.
27	0.23028	SLU 3-NL	NonStatic	Max	-298.458	-24.224	0.	0.
27	0.46056	SLU 3-NL	NonStatic	Max	-295.559	-5.438	0.	0.
27	0.	SLU 3-NL	NonStatic	Min	-301.427	-43.445	0.	0.
27	0.23028	SLU 3-NL	NonStatic	Min	-298.458	-24.224	0.	0.
27	0.46056	SLU 3-NL	NonStatic	Min	-295.559	-5.438	0.	0.
27	0.	SLU 4-NL	NonStatic	Max	-326.18	-129.717	0.	0.
27	0.23028	SLU 4-NL	NonStatic	Max	-318.857	-99.151	0.	0.
27	0.46056	SLU 4-NL	NonStatic	Max	-311.648	-69.14	0.	0.
27	0.	SLU 4-NL	NonStatic	Min	-326.18	-129.717	0.	0.
27	0.23028	SLU 4-NL	NonStatic	Min	-318.857	-99.151	0.	0.
27	0.46056	SLU 4-NL	NonStatic	Min	-311.648	-69.14	0.	0.
27	0.	SLU 5-NL	NonStatic	Max	-290.63	-37.815	0.	0.
27	0.23028	SLU 5-NL	NonStatic	Max	-287.662	-18.595	0.	0.
27	0.46056	SLU 5-NL	NonStatic	Max	-284.762	0.192	0.	0.
27	0.	SLU 5-NL	NonStatic	Min	-290.63	-37.815	0.	0.
27	0.23028	SLU 5-NL	NonStatic	Min	-287.662	-18.595	0.	0.
27	0.46056	SLU 5-NL	NonStatic	Min	-284.762	0.192	0.	0.
27	0.	SLU 6-NL	NonStatic	Max	-339.954	-143.392	0.	0.
27	0.23028	SLU 6-NL	NonStatic	Max	-330.986	-113.457	0.	0.
27	0.46056	SLU 6-NL	NonStatic	Max	-322.153	-84.07	0.	0.
27	0.	SLU 6-NL	NonStatic	Min	-339.954	-143.392	0.	0.
27	0.23028	SLU 6-NL	NonStatic	Min	-330.986	-113.457	0.	0.
27	0.46056	SLU 6-NL	NonStatic	Min	-322.153	-84.07	0.	0.
27	0.	SLU 7-NL	NonStatic	Max	-304.601	-52.001	0.	0.
27	0.23028	SLU 7-NL	NonStatic	Max	-299.988	-33.411	0.	0.
27	0.46056	SLU 7-NL	NonStatic	Max	-295.464	-15.248	0.	0.
27	0.	SLU 7-NL	NonStatic	Min	-304.601	-52.001	0.	0.
27	0.23028	SLU 7-NL	NonStatic	Min	-299.988	-33.411	0.	0.
27	0.46056	SLU 7-NL	NonStatic	Min	-295.464	-15.248	0.	0.
27	0.	SLE-C-NL	NonStatic	Max	-256.7	-98.954	0.	0.
27	0.23028	SLE-C-NL	NonStatic	Max	-251.202	-76.098	0.	0.
27	0.46056	SLE-C-NL	NonStatic	Max	-245.793	-53.669	0.	0.
27	0.	SLE-C-NL	NonStatic	Min	-256.7	-98.954	0.	0.
27	0.23028	SLE-C-NL	NonStatic	Min	-251.202	-76.098	0.	0.
27	0.46056	SLE-C-NL	NonStatic	Min	-245.793	-53.669	0.	0.
27	0.	SLE-F-1-NL	NonStatic	Max	-225.338	-103.324	0.	0.
27	0.23028	SLE-F-1-NL	NonStatic	Max	-219.492	-81.524	0.	0.
27	0.46056	SLE-F-1-NL	NonStatic	Max	-213.735	-60.149	0.	0.
27	0.	SLE-F-1-NL	NonStatic	Min	-225.338	-103.324	0.	0.

Table: Element Forces - Frames, Part 1 of 2

Frame	Station	OutputCase	CaseType	StepType	P	V2	V3	T
	m				KN	KN	KN	KN-m
27	0.23028	SLE-F-1-NL	NonStatic	Min	-219.492	-81.524	0.	0.
27	0.46056	SLE-F-1-NL	NonStatic	Min	-213.735	-60.149	0.	0.
27	0.	SLE-F-2-NL	NonStatic	Max	-225.418	-69.395	0.	0.
27	0.23028	SLE-F-2-NL	NonStatic	Max	-221.33	-50.603	0.	0.
27	0.46056	SLE-F-2-NL	NonStatic	Max	-217.331	-32.239	0.	0.
27	0.	SLE-F-2-NL	NonStatic	Min	-225.418	-69.395	0.	0.
27	0.23028	SLE-F-2-NL	NonStatic	Min	-221.33	-50.603	0.	0.
27	0.46056	SLE-F-2-NL	NonStatic	Min	-217.331	-32.239	0.	0.
27	0.	SLE-F-3-NL	NonStatic	Max	-229.998	-74.092	0.	0.
27	0.23028	SLE-F-3-NL	NonStatic	Max	-225.385	-55.502	0.	0.
27	0.46056	SLE-F-3-NL	NonStatic	Max	-220.861	-37.339	0.	0.
27	0.	SLE-F-3-NL	NonStatic	Min	-229.998	-74.092	0.	0.
27	0.23028	SLE-F-3-NL	NonStatic	Min	-225.385	-55.502	0.	0.
27	0.46056	SLE-F-3-NL	NonStatic	Min	-220.861	-37.339	0.	0.
27	0.	SLE-QP-NL	NonStatic	Max	-210.463	-78.363	0.	0.
27	0.23028	SLE-QP-NL	NonStatic	Max	-205.85	-59.773	0.	0.
27	0.46056	SLE-QP-NL	NonStatic	Max	-201.325	-41.61	0.	0.
27	0.	SLE-QP-NL	NonStatic	Min	-210.463	-78.363	0.	0.
27	0.23028	SLE-QP-NL	NonStatic	Min	-205.85	-59.773	0.	0.
27	0.46056	SLE-QP-NL	NonStatic	Min	-201.325	-41.61	0.	0.
27	0.	SLV1-NL	NonStatic	Max	-278.642	-45.276	0.	0.
27	0.23028	SLV1-NL	NonStatic	Max	-275.765	-25.248	0.	0.
27	0.46056	SLV1-NL	NonStatic	Max	-272.975	-5.647	0.	0.
27	0.	SLV1-NL	NonStatic	Min	-278.642	-45.276	0.	0.
27	0.23028	SLV1-NL	NonStatic	Min	-275.765	-25.248	0.	0.
27	0.46056	SLV1-NL	NonStatic	Min	-272.975	-5.647	0.	0.
27	0.	SLV2-NL	NonStatic	Max	-237.013	-87.801	0.	0.
27	0.23028	SLV2-NL	NonStatic	Max	-230.411	-69.203	0.	0.
27	0.46056	SLV2-NL	NonStatic	Max	-223.897	-51.032	0.	0.
27	0.	SLV2-NL	NonStatic	Min	-237.013	-87.801	0.	0.
27	0.23028	SLV2-NL	NonStatic	Min	-230.411	-69.203	0.	0.
27	0.46056	SLV2-NL	NonStatic	Min	-223.897	-51.032	0.	0.
27	0.	SLV3-NL	NonStatic	Max	-280.651	-47.034	0.	0.
27	0.23028	SLV3-NL	NonStatic	Max	-277.674	-26.746	0.	0.
27	0.46056	SLV3-NL	NonStatic	Max	-274.785	-6.885	0.	0.
27	0.	SLV3-NL	NonStatic	Min	-280.651	-47.034	0.	0.
27	0.23028	SLV3-NL	NonStatic	Min	-277.674	-26.746	0.	0.
27	0.46056	SLV3-NL	NonStatic	Min	-274.785	-6.885	0.	0.
27	0.	SLV4-NL	NonStatic	Max	-239.021	-89.555	0.	0.
27	0.23028	SLV4-NL	NonStatic	Max	-232.319	-70.697	0.	0.
27	0.46056	SLV4-NL	NonStatic	Max	-225.706	-52.266	0.	0.
27	0.	SLV4-NL	NonStatic	Min	-239.021	-89.555	0.	0.
27	0.23028	SLV4-NL	NonStatic	Min	-232.319	-70.697	0.	0.
27	0.46056	SLV4-NL	NonStatic	Min	-225.706	-52.266	0.	0.
27	0.	SLV5-NL	NonStatic	Max	-231.059	-70.032	0.	0.
27	0.23028	SLV5-NL	NonStatic	Max	-226.994	-50.808	0.	0.
27	0.46056	SLV5-NL	NonStatic	Max	-223.018	-32.01	0.	0.
27	0.	SLV5-NL	NonStatic	Min	-231.059	-70.032	0.	0.
27	0.23028	SLV5-NL	NonStatic	Min	-226.994	-50.808	0.	0.
27	0.46056	SLV5-NL	NonStatic	Min	-223.018	-32.01	0.	0.
27	0.	SLV6-NL	NonStatic	Max	-218.496	-82.592	0.	0.
27	0.23028	SLV6-NL	NonStatic	Max	-213.313	-63.796	0.	0.
27	0.46056	SLV6-NL	NonStatic	Max	-208.22	-45.428	0.	0.
27	0.	SLV6-NL	NonStatic	Min	-218.496	-82.592	0.	0.

Table: Element Forces - Frames, Part 1 of 2

Frame	Station	OutputCase	CaseType	StepType	P	V2	V3	T
	m				KN	KN	KN	KN-m
27	0.23028	SLV6-NL	NonStatic	Min	-213.313	-63.796	0.	0.
27	0.46056	SLV6-NL	NonStatic	Min	-208.22	-45.428	0.	0.
27	0.	SLV7-NL	NonStatic	Max	-237.76	-75.893	0.	0.
27	0.23028	SLV7-NL	NonStatic	Max	-233.362	-55.803	0.	0.
27	0.46056	SLV7-NL	NonStatic	Max	-229.053	-36.139	0.	0.
27	0.	SLV7-NL	NonStatic	Min	-237.76	-75.893	0.	0.
27	0.23028	SLV7-NL	NonStatic	Min	-233.362	-55.803	0.	0.
27	0.46056	SLV7-NL	NonStatic	Min	-229.053	-36.139	0.	0.
27	0.	SLV8-NL	NonStatic	Max	-225.189	-88.434	0.	0.
27	0.23028	SLV8-NL	NonStatic	Max	-219.674	-68.773	0.	0.
27	0.46056	SLV8-NL	NonStatic	Max	-214.248	-49.538	0.	0.
27	0.	SLV8-NL	NonStatic	Min	-225.189	-88.434	0.	0.
27	0.23028	SLV8-NL	NonStatic	Min	-219.674	-68.773	0.	0.
27	0.46056	SLV8-NL	NonStatic	Min	-214.248	-49.538	0.	0.
27	0.	SLV9-NL	NonStatic	Max	-260.94	-60.465	0.	0.
27	0.23028	SLV9-NL	NonStatic	Max	-257.304	-40.867	0.	0.
27	0.46056	SLV9-NL	NonStatic	Max	-253.757	-21.695	0.	0.
27	0.	SLV9-NL	NonStatic	Min	-260.94	-60.465	0.	0.
27	0.23028	SLV9-NL	NonStatic	Min	-257.304	-40.867	0.	0.
27	0.46056	SLV9-NL	NonStatic	Min	-253.757	-21.695	0.	0.
27	0.	SLV10-NL	NonStatic	Max	-200.081	-91.372	0.	0.
27	0.23028	SLV10-NL	NonStatic	Max	-194.33	-72.586	0.	0.
27	0.46056	SLV10-NL	NonStatic	Max	-188.667	-54.226	0.	0.
27	0.	SLV10-NL	NonStatic	Min	-200.081	-91.372	0.	0.
27	0.23028	SLV10-NL	NonStatic	Min	-194.33	-72.586	0.	0.
27	0.46056	SLV10-NL	NonStatic	Min	-188.667	-54.226	0.	0.
27	0.	SLV11-NL	NonStatic	Max	-262.099	-64.775	0.	0.
27	0.23028	SLV11-NL	NonStatic	Max	-258.271	-44.675	0.	0.
27	0.46056	SLV11-NL	NonStatic	Max	-254.531	-25.002	0.	0.
27	0.	SLV11-NL	NonStatic	Min	-262.099	-64.775	0.	0.
27	0.23028	SLV11-NL	NonStatic	Min	-258.271	-44.675	0.	0.
27	0.46056	SLV11-NL	NonStatic	Min	-254.531	-25.002	0.	0.
27	0.	SLV12-NL	NonStatic	Max	-201.232	-95.661	0.	0.
27	0.23028	SLV12-NL	NonStatic	Max	-195.289	-76.374	0.	0.
27	0.46056	SLV12-NL	NonStatic	Max	-189.434	-57.513	0.	0.
27	0.	SLV12-NL	NonStatic	Min	-201.232	-95.661	0.	0.
27	0.23028	SLV12-NL	NonStatic	Min	-195.289	-76.374	0.	0.
27	0.46056	SLV12-NL	NonStatic	Min	-189.434	-57.513	0.	0.
27	0.	SLV13-NL	NonStatic	Max	-227.044	-70.718	0.	0.
27	0.23028	SLV13-NL	NonStatic	Max	-222.892	-51.989	0.	0.
27	0.46056	SLV13-NL	NonStatic	Max	-218.828	-33.686	0.	0.
27	0.	SLV13-NL	NonStatic	Min	-227.044	-70.718	0.	0.
27	0.23028	SLV13-NL	NonStatic	Min	-222.892	-51.989	0.	0.
27	0.46056	SLV13-NL	NonStatic	Min	-218.828	-33.686	0.	0.
27	0.	SLV14-NL	NonStatic	Max	-208.973	-79.691	0.	0.
27	0.23028	SLV14-NL	NonStatic	Max	-204.187	-61.205	0.	0.
27	0.46056	SLV14-NL	NonStatic	Max	-199.489	-43.146	0.	0.
27	0.	SLV14-NL	NonStatic	Min	-208.973	-79.691	0.	0.
27	0.23028	SLV14-NL	NonStatic	Min	-204.187	-61.205	0.	0.
27	0.46056	SLV14-NL	NonStatic	Min	-199.489	-43.146	0.	0.
27	0.	SLV15-NL	NonStatic	Max	-231.45	-84.919	0.	0.
27	0.23028	SLV15-NL	NonStatic	Max	-226.657	-64.519	0.	0.
27	0.46056	SLV15-NL	NonStatic	Max	-221.952	-44.545	0.	0.
27	0.	SLV15-NL	NonStatic	Min	-231.45	-84.919	0.	0.

Table: Element Forces - Frames, Part 1 of 2

Frame	Station	OutputCase	CaseType	StepType	P	V2	V3	T
	m				KN	KN	KN	KN-m
27	0.23028	SLV15-NL	NonStatic	Min	-226.657	-64.519	0.	0.
27	0.46056	SLV15-NL	NonStatic	Min	-221.952	-44.545	0.	0.
27	0.	SLV16-NL	NonStatic	Max	-213.519	-93.682	0.	0.
27	0.23028	SLV16-NL	NonStatic	Max	-208.092	-73.525	0.	0.
27	0.46056	SLV16-NL	NonStatic	Max	-202.752	-53.795	0.	0.
27	0.	SLV16-NL	NonStatic	Min	-213.519	-93.682	0.	0.
27	0.23028	SLV16-NL	NonStatic	Min	-208.092	-73.525	0.	0.
27	0.46056	SLV16-NL	NonStatic	Min	-202.752	-53.795	0.	0.
28	0.	SLU 1-NL	NonStatic	Max	-319.129	-106.103	0.	0.
28	0.23028	SLU 1-NL	NonStatic	Max	-313.861	-75.4	0.	0.
28	0.46056	SLU 1-NL	NonStatic	Max	-308.635	-44.985	0.	0.
28	0.	SLU 1-NL	NonStatic	Min	-319.129	-106.103	0.	0.
28	0.23028	SLU 1-NL	NonStatic	Min	-313.861	-75.4	0.	0.
28	0.46056	SLU 1-NL	NonStatic	Min	-308.635	-44.985	0.	0.
28	0.	SLU 2-NL	NonStatic	Max	-221.638	-132.225	0.	0.
28	0.23028	SLU 2-NL	NonStatic	Max	-215.166	-101.845	0.	0.
28	0.46056	SLU 2-NL	NonStatic	Max	-208.745	-71.75	0.	0.
28	0.	SLU 2-NL	NonStatic	Min	-221.638	-132.225	0.	0.
28	0.23028	SLU 2-NL	NonStatic	Min	-215.166	-101.845	0.	0.
28	0.46056	SLU 2-NL	NonStatic	Min	-208.745	-71.75	0.	0.
28	0.	SLU 3-NL	NonStatic	Max	-293.371	-36.302	0.	0.
28	0.23028	SLU 3-NL	NonStatic	Max	-291.284	-17.472	0.	0.
28	0.46056	SLU 3-NL	NonStatic	Max	-289.223	1.135	0.	0.
28	0.	SLU 3-NL	NonStatic	Min	-293.371	-36.302	0.	0.
28	0.23028	SLU 3-NL	NonStatic	Min	-291.284	-17.472	0.	0.
28	0.46056	SLU 3-NL	NonStatic	Min	-289.223	1.135	0.	0.
28	0.	SLU 4-NL	NonStatic	Max	-302.713	-101.338	0.	0.
28	0.23028	SLU 4-NL	NonStatic	Max	-297.445	-70.635	0.	0.
28	0.46056	SLU 4-NL	NonStatic	Max	-292.22	-40.22	0.	0.
28	0.	SLU 4-NL	NonStatic	Min	-302.713	-101.338	0.	0.
28	0.23028	SLU 4-NL	NonStatic	Min	-297.445	-70.635	0.	0.
28	0.46056	SLU 4-NL	NonStatic	Min	-292.22	-40.22	0.	0.
28	0.	SLU 5-NL	NonStatic	Max	-283.222	-29.575	0.	0.
28	0.23028	SLU 5-NL	NonStatic	Max	-281.135	-10.745	0.	0.
28	0.46056	SLU 5-NL	NonStatic	Max	-279.073	7.862	0.	0.
28	0.	SLU 5-NL	NonStatic	Min	-283.222	-29.575	0.	0.
28	0.23028	SLU 5-NL	NonStatic	Min	-281.135	-10.745	0.	0.
28	0.46056	SLU 5-NL	NonStatic	Min	-279.073	7.862	0.	0.
28	0.	SLU 6-NL	NonStatic	Max	-311.601	-117.283	0.	0.
28	0.23028	SLU 6-NL	NonStatic	Max	-305.13	-86.903	0.	0.
28	0.46056	SLU 6-NL	NonStatic	Max	-298.709	-56.808	0.	0.
28	0.	SLU 6-NL	NonStatic	Min	-311.601	-117.283	0.	0.
28	0.23028	SLU 6-NL	NonStatic	Min	-305.13	-86.903	0.	0.
28	0.46056	SLU 6-NL	NonStatic	Min	-298.709	-56.808	0.	0.
28	0.	SLU 7-NL	NonStatic	Max	-292.251	-46.049	0.	0.
28	0.23028	SLU 7-NL	NonStatic	Max	-288.961	-27.541	0.	0.
28	0.46056	SLU 7-NL	NonStatic	Max	-285.704	-9.255	0.	0.
28	0.	SLU 7-NL	NonStatic	Min	-292.251	-46.049	0.	0.
28	0.23028	SLU 7-NL	NonStatic	Min	-288.961	-27.541	0.	0.
28	0.46056	SLU 7-NL	NonStatic	Min	-285.704	-9.255	0.	0.
28	0.	SLE-C-NL	NonStatic	Max	-238.837	-79.067	0.	0.
28	0.23028	SLE-C-NL	NonStatic	Max	-234.886	-56.131	0.	0.
28	0.46056	SLE-C-NL	NonStatic	Max	-230.968	-33.416	0.	0.
28	0.	SLE-C-NL	NonStatic	Min	-238.837	-79.067	0.	0.

Table: Element Forces - Frames, Part 1 of 2

Frame	Station	OutputCase	CaseType	StepType	P	V2	V3	T
	m				KN	KN	KN	KN-m
28	0.23028	SLE-C-NL	NonStatic	Min	-234.886	-56.131	0.	0.
28	0.46056	SLE-C-NL	NonStatic	Min	-230.968	-33.416	0.	0.
28	0.	SLE-F-1-NL	NonStatic	Max	-206.277	-82.161	0.	0.
28	0.23028	SLE-F-1-NL	NonStatic	Max	-202.066	-60.216	0.	0.
28	0.46056	SLE-F-1-NL	NonStatic	Max	-197.888	-38.492	0.	0.
28	0.	SLE-F-1-NL	NonStatic	Min	-206.277	-82.161	0.	0.
28	0.23028	SLE-F-1-NL	NonStatic	Min	-202.066	-60.216	0.	0.
28	0.46056	SLE-F-1-NL	NonStatic	Min	-197.888	-38.492	0.	0.
28	0.	SLE-F-2-NL	NonStatic	Max	-212.771	-54.779	0.	0.
28	0.23028	SLE-F-2-NL	NonStatic	Max	-209.873	-36.167	0.	0.
28	0.46056	SLE-F-2-NL	NonStatic	Max	-207.008	-17.775	0.	0.
28	0.	SLE-F-2-NL	NonStatic	Min	-212.771	-54.779	0.	0.
28	0.23028	SLE-F-2-NL	NonStatic	Min	-209.873	-36.167	0.	0.
28	0.46056	SLE-F-2-NL	NonStatic	Min	-207.008	-17.775	0.	0.
28	0.	SLE-F-3-NL	NonStatic	Max	-215.748	-60.221	0.	0.
28	0.23028	SLE-F-3-NL	NonStatic	Max	-212.458	-41.713	0.	0.
28	0.46056	SLE-F-3-NL	NonStatic	Max	-209.201	-23.427	0.	0.
28	0.	SLE-F-3-NL	NonStatic	Min	-215.748	-60.221	0.	0.
28	0.23028	SLE-F-3-NL	NonStatic	Min	-212.458	-41.713	0.	0.
28	0.46056	SLE-F-3-NL	NonStatic	Min	-209.201	-23.427	0.	0.
28	0.	SLE-QP-NL	NonStatic	Max	-195.873	-62.427	0.	0.
28	0.23028	SLE-QP-NL	NonStatic	Max	-192.583	-43.919	0.	0.
28	0.46056	SLE-QP-NL	NonStatic	Max	-189.326	-25.633	0.	0.
28	0.	SLE-QP-NL	NonStatic	Min	-195.873	-62.427	0.	0.
28	0.23028	SLE-QP-NL	NonStatic	Min	-192.583	-43.919	0.	0.
28	0.46056	SLE-QP-NL	NonStatic	Min	-189.326	-25.633	0.	0.
28	0.	SLV1-NL	NonStatic	Max	-270.89	-34.15	0.	0.
28	0.23028	SLV1-NL	NonStatic	Max	-269.012	-14.494	0.	0.
28	0.46056	SLV1-NL	NonStatic	Max	-267.168	4.941	0.	0.
28	0.	SLV1-NL	NonStatic	Min	-270.89	-34.15	0.	0.
28	0.23028	SLV1-NL	NonStatic	Min	-269.012	-14.494	0.	0.
28	0.46056	SLV1-NL	NonStatic	Min	-267.168	4.941	0.	0.
28	0.	SLV2-NL	NonStatic	Max	-217.337	-74.156	0.	0.
28	0.23028	SLV2-NL	NonStatic	Max	-212.445	-55.307	0.	0.
28	0.46056	SLV2-NL	NonStatic	Max	-207.587	-36.68	0.	0.
28	0.	SLV2-NL	NonStatic	Min	-217.337	-74.156	0.	0.
28	0.23028	SLV2-NL	NonStatic	Min	-212.445	-55.307	0.	0.
28	0.46056	SLV2-NL	NonStatic	Min	-207.587	-36.68	0.	0.
28	0.	SLV3-NL	NonStatic	Max	-272.56	-35.57	0.	0.
28	0.23028	SLV3-NL	NonStatic	Max	-270.607	-15.631	0.	0.
28	0.46056	SLV3-NL	NonStatic	Max	-268.687	4.086	0.	0.
28	0.	SLV3-NL	NonStatic	Min	-272.56	-35.57	0.	0.
28	0.23028	SLV3-NL	NonStatic	Min	-270.607	-15.631	0.	0.
28	0.46056	SLV3-NL	NonStatic	Min	-268.687	4.086	0.	0.
28	0.	SLV4-NL	NonStatic	Max	-219.006	-75.572	0.	0.
28	0.23028	SLV4-NL	NonStatic	Max	-214.039	-56.442	0.	0.
28	0.46056	SLV4-NL	NonStatic	Max	-209.105	-37.532	0.	0.
28	0.	SLV4-NL	NonStatic	Min	-219.006	-75.572	0.	0.
28	0.23028	SLV4-NL	NonStatic	Min	-214.039	-56.442	0.	0.
28	0.46056	SLV4-NL	NonStatic	Min	-209.105	-37.532	0.	0.
28	0.	SLV5-NL	NonStatic	Max	-218.45	-55.147	0.	0.
28	0.23028	SLV5-NL	NonStatic	Max	-215.606	-36.103	0.	0.
28	0.46056	SLV5-NL	NonStatic	Max	-212.796	-17.281	0.	0.
28	0.	SLV5-NL	NonStatic	Min	-218.45	-55.147	0.	0.

Table: Element Forces - Frames, Part 1 of 2

Frame	Station	OutputCase	CaseType	StepType	P	V2	V3	T
	m				KN	KN	KN	KN-m
28	0.23028	SLV5-NL	NonStatic	Min	-215.606	-36.103	0.	0.
28	0.46056	SLV5-NL	NonStatic	Min	-212.796	-17.281	0.	0.
28	0.	SLV6-NL	NonStatic	Max	-202.331	-66.944	0.	0.
28	0.23028	SLV6-NL	NonStatic	Max	-198.582	-48.142	0.	0.
28	0.46056	SLV6-NL	NonStatic	Max	-194.867	-29.562	0.	0.
28	0.	SLV6-NL	NonStatic	Min	-202.331	-66.944	0.	0.
28	0.23028	SLV6-NL	NonStatic	Min	-198.582	-48.142	0.	0.
28	0.46056	SLV6-NL	NonStatic	Min	-194.867	-29.562	0.	0.
28	0.	SLV7-NL	NonStatic	Max	-224.021	-59.884	0.	0.
28	0.23028	SLV7-NL	NonStatic	Max	-220.925	-39.898	0.	0.
28	0.46056	SLV7-NL	NonStatic	Max	-217.862	-20.134	0.	0.
28	0.	SLV7-NL	NonStatic	Min	-224.021	-59.884	0.	0.
28	0.23028	SLV7-NL	NonStatic	Min	-220.925	-39.898	0.	0.
28	0.46056	SLV7-NL	NonStatic	Min	-217.862	-20.134	0.	0.
28	0.	SLV8-NL	NonStatic	Max	-207.896	-71.661	0.	0.
28	0.23028	SLV8-NL	NonStatic	Max	-203.896	-51.918	0.	0.
28	0.46056	SLV8-NL	NonStatic	Max	-199.928	-32.397	0.	0.
28	0.	SLV8-NL	NonStatic	Min	-207.896	-71.661	0.	0.
28	0.23028	SLV8-NL	NonStatic	Min	-203.896	-51.918	0.	0.
28	0.46056	SLV8-NL	NonStatic	Min	-199.928	-32.397	0.	0.
28	0.	SLV9-NL	NonStatic	Max	-250.099	-48.101	0.	0.
28	0.23028	SLV9-NL	NonStatic	Max	-247.422	-28.793	0.	0.
28	0.46056	SLV9-NL	NonStatic	Max	-244.779	-9.707	0.	0.
28	0.	SLV9-NL	NonStatic	Min	-250.099	-48.101	0.	0.
28	0.23028	SLV9-NL	NonStatic	Min	-247.422	-28.793	0.	0.
28	0.46056	SLV9-NL	NonStatic	Min	-244.779	-9.707	0.	0.
28	0.	SLV10-NL	NonStatic	Max	-181.966	-73.65	0.	0.
28	0.23028	SLV10-NL	NonStatic	Max	-177.94	-54.704	0.	0.
28	0.46056	SLV10-NL	NonStatic	Max	-173.948	-35.979	0.	0.
28	0.	SLV10-NL	NonStatic	Min	-181.966	-73.65	0.	0.
28	0.23028	SLV10-NL	NonStatic	Min	-177.94	-54.704	0.	0.
28	0.46056	SLV10-NL	NonStatic	Min	-173.948	-35.979	0.	0.
28	0.	SLV11-NL	NonStatic	Max	-250.523	-51.471	0.	0.
28	0.23028	SLV11-NL	NonStatic	Max	-247.704	-31.631	0.	0.
28	0.46056	SLV11-NL	NonStatic	Max	-244.918	-12.012	0.	0.
28	0.	SLV11-NL	NonStatic	Min	-250.523	-51.471	0.	0.
28	0.23028	SLV11-NL	NonStatic	Min	-247.704	-31.631	0.	0.
28	0.46056	SLV11-NL	NonStatic	Min	-244.918	-12.012	0.	0.
28	0.	SLV12-NL	NonStatic	Max	-182.384	-76.999	0.	0.
28	0.23028	SLV12-NL	NonStatic	Max	-178.216	-57.52	0.	0.
28	0.46056	SLV12-NL	NonStatic	Max	-174.081	-38.263	0.	0.
28	0.	SLV12-NL	NonStatic	Min	-182.384	-76.999	0.	0.
28	0.23028	SLV12-NL	NonStatic	Min	-178.216	-57.52	0.	0.
28	0.46056	SLV12-NL	NonStatic	Min	-174.081	-38.263	0.	0.
28	0.	SLV13-NL	NonStatic	Max	-214.109	-56.375	0.	0.
28	0.23028	SLV13-NL	NonStatic	Max	-211.126	-37.815	0.	0.
28	0.46056	SLV13-NL	NonStatic	Max	-208.177	-19.475	0.	0.
28	0.	SLV13-NL	NonStatic	Min	-214.109	-56.375	0.	0.
28	0.23028	SLV13-NL	NonStatic	Min	-211.126	-37.815	0.	0.
28	0.46056	SLV13-NL	NonStatic	Min	-208.177	-19.475	0.	0.
28	0.	SLV14-NL	NonStatic	Max	-193.886	-63.762	0.	0.
28	0.23028	SLV14-NL	NonStatic	Max	-190.499	-45.31	0.	0.
28	0.46056	SLV14-NL	NonStatic	Max	-187.145	-27.079	0.	0.
28	0.	SLV14-NL	NonStatic	Min	-193.886	-63.762	0.	0.

Table: Element Forces - Frames, Part 1 of 2

Frame	Station	OutputCase	CaseType	StepType	P	V2	V3	T
	m				KN	KN	KN	KN-m
28	0.23028	SLV14-NL	NonStatic	Min	-190.499	-45.31	0.	0.
28	0.46056	SLV14-NL	NonStatic	Min	-187.145	-27.079	0.	0.
28	0.	SLV15-NL	NonStatic	Max	-216.08	-67.501	0.	0.
28	0.23028	SLV15-NL	NonStatic	Max	-212.623	-47.167	0.	0.
28	0.46056	SLV15-NL	NonStatic	Max	-209.198	-27.053	0.	0.
28	0.	SLV15-NL	NonStatic	Min	-216.08	-67.501	0.	0.
28	0.23028	SLV15-NL	NonStatic	Min	-212.623	-47.167	0.	0.
28	0.46056	SLV15-NL	NonStatic	Min	-209.198	-27.053	0.	0.
28	0.	SLV16-NL	NonStatic	Max	-196.018	-74.694	0.	0.
28	0.23028	SLV16-NL	NonStatic	Max	-192.156	-54.468	0.	0.
28	0.46056	SLV16-NL	NonStatic	Max	-188.327	-34.463	0.	0.
28	0.	SLV16-NL	NonStatic	Min	-196.018	-74.694	0.	0.
28	0.23028	SLV16-NL	NonStatic	Min	-192.156	-54.468	0.	0.
28	0.46056	SLV16-NL	NonStatic	Min	-188.327	-34.463	0.	0.
29	0.	SLU 1-NL	NonStatic	Max	-302.242	-77.	0.	0.
29	0.23028	SLU 1-NL	NonStatic	Max	-299.06	-46.125	0.	0.
29	0.46056	SLU 1-NL	NonStatic	Max	-295.905	-15.544	0.	0.
29	0.	SLU 1-NL	NonStatic	Min	-302.242	-77.	0.	0.
29	0.23028	SLU 1-NL	NonStatic	Min	-299.06	-46.125	0.	0.
29	0.46056	SLU 1-NL	NonStatic	Min	-295.905	-15.544	0.	0.
29	0.	SLU 2-NL	NonStatic	Max	-200.102	-93.177	0.	0.
29	0.23028	SLU 2-NL	NonStatic	Max	-196.186	-62.418	0.	0.
29	0.46056	SLU 2-NL	NonStatic	Max	-192.301	-31.954	0.	0.
29	0.	SLU 2-NL	NonStatic	Min	-200.102	-93.177	0.	0.
29	0.23028	SLU 2-NL	NonStatic	Min	-196.186	-62.418	0.	0.
29	0.46056	SLU 2-NL	NonStatic	Min	-192.301	-31.954	0.	0.
29	0.	SLU 3-NL	NonStatic	Max	-287.757	-29.104	0.	0.
29	0.23028	SLU 3-NL	NonStatic	Max	-286.515	-10.477	0.	0.
29	0.46056	SLU 3-NL	NonStatic	Max	-285.289	7.923	0.	0.
29	0.	SLU 3-NL	NonStatic	Min	-287.757	-29.104	0.	0.
29	0.23028	SLU 3-NL	NonStatic	Min	-286.515	-10.477	0.	0.
29	0.46056	SLU 3-NL	NonStatic	Min	-285.289	7.923	0.	0.
29	0.	SLU 4-NL	NonStatic	Max	-286.415	-70.545	0.	0.
29	0.23028	SLU 4-NL	NonStatic	Max	-283.233	-39.67	0.	0.
29	0.46056	SLU 4-NL	NonStatic	Max	-280.078	-9.09	0.	0.
29	0.	SLU 4-NL	NonStatic	Min	-286.415	-70.545	0.	0.
29	0.23028	SLU 4-NL	NonStatic	Min	-283.233	-39.67	0.	0.
29	0.46056	SLU 4-NL	NonStatic	Min	-280.078	-9.09	0.	0.
29	0.	SLU 5-NL	NonStatic	Max	-278.366	-21.352	0.	0.
29	0.23028	SLU 5-NL	NonStatic	Max	-277.124	-2.725	0.	0.
29	0.46056	SLU 5-NL	NonStatic	Max	-275.898	15.674	0.	0.
29	0.	SLU 5-NL	NonStatic	Min	-278.366	-21.352	0.	0.
29	0.23028	SLU 5-NL	NonStatic	Min	-277.124	-2.725	0.	0.
29	0.46056	SLU 5-NL	NonStatic	Min	-275.898	15.674	0.	0.
29	0.	SLU 6-NL	NonStatic	Max	-291.134	-87.721	0.	0.
29	0.23028	SLU 6-NL	NonStatic	Max	-287.218	-56.962	0.	0.
29	0.46056	SLU 6-NL	NonStatic	Max	-283.333	-26.497	0.	0.
29	0.	SLU 6-NL	NonStatic	Min	-291.134	-87.721	0.	0.
29	0.23028	SLU 6-NL	NonStatic	Min	-287.218	-56.962	0.	0.
29	0.46056	SLU 6-NL	NonStatic	Min	-283.333	-26.497	0.	0.
29	0.	SLU 7-NL	NonStatic	Max	-283.172	-39.069	0.	0.
29	0.23028	SLU 7-NL	NonStatic	Max	-281.196	-20.558	0.	0.
29	0.46056	SLU 7-NL	NonStatic	Max	-279.24	-2.274	0.	0.
29	0.	SLU 7-NL	NonStatic	Min	-283.172	-39.069	0.	0.

Table: Element Forces - Frames, Part 1 of 2

Frame	Station	OutputCase	CaseType	StepType	P	V2	V3	T
	m				KN	KN	KN	KN-m
29	0.23028	SLU 7-NL	NonStatic	Min	-281.196	-20.558	0.	0.
29	0.46056	SLU 7-NL	NonStatic	Min	-279.24	-2.274	0.	0.
29	0.	SLE-C-NL	NonStatic	Max	-226.21	-57.376	0.	0.
29	0.23028	SLE-C-NL	NonStatic	Max	-223.825	-34.324	0.	0.
29	0.46056	SLE-C-NL	NonStatic	Max	-221.461	-11.5	0.	0.
29	0.	SLE-C-NL	NonStatic	Min	-226.21	-57.376	0.	0.
29	0.23028	SLE-C-NL	NonStatic	Min	-223.825	-34.324	0.	0.
29	0.46056	SLE-C-NL	NonStatic	Min	-221.461	-11.5	0.	0.
29	0.	SLE-F-1-NL	NonStatic	Max	-192.78	-58.966	0.	0.
29	0.23028	SLE-F-1-NL	NonStatic	Max	-190.235	-36.861	0.	0.
29	0.46056	SLE-F-1-NL	NonStatic	Max	-187.71	-14.983	0.	0.
29	0.	SLE-F-1-NL	NonStatic	Min	-192.78	-58.966	0.	0.
29	0.23028	SLE-F-1-NL	NonStatic	Min	-190.235	-36.861	0.	0.
29	0.46056	SLE-F-1-NL	NonStatic	Min	-187.71	-14.983	0.	0.
29	0.	SLE-F-2-NL	NonStatic	Max	-204.016	-39.316	0.	0.
29	0.23028	SLE-F-2-NL	NonStatic	Max	-202.283	-20.767	0.	0.
29	0.46056	SLE-F-2-NL	NonStatic	Max	-200.569	-2.445	0.	0.
29	0.	SLE-F-2-NL	NonStatic	Min	-204.016	-39.316	0.	0.
29	0.23028	SLE-F-2-NL	NonStatic	Min	-202.283	-20.767	0.	0.
29	0.46056	SLE-F-2-NL	NonStatic	Min	-200.569	-2.445	0.	0.
29	0.	SLE-F-3-NL	NonStatic	Max	-205.606	-45.166	0.	0.
29	0.23028	SLE-F-3-NL	NonStatic	Max	-203.63	-26.655	0.	0.
29	0.46056	SLE-F-3-NL	NonStatic	Max	-201.674	-8.371	0.	0.
29	0.	SLE-F-3-NL	NonStatic	Min	-205.606	-45.166	0.	0.
29	0.23028	SLE-F-3-NL	NonStatic	Min	-203.63	-26.655	0.	0.
29	0.46056	SLE-F-3-NL	NonStatic	Min	-201.674	-8.371	0.	0.
29	0.	SLE-QP-NL	NonStatic	Max	-185.609	-45.282	0.	0.
29	0.23028	SLE-QP-NL	NonStatic	Max	-183.633	-26.771	0.	0.
29	0.46056	SLE-QP-NL	NonStatic	Max	-181.677	-8.488	0.	0.
29	0.	SLE-QP-NL	NonStatic	Min	-185.609	-45.282	0.	0.
29	0.23028	SLE-QP-NL	NonStatic	Min	-183.633	-26.771	0.	0.
29	0.46056	SLE-QP-NL	NonStatic	Min	-181.677	-8.488	0.	0.
29	0.	SLV1-NL	NonStatic	Max	-266.221	-23.013	0.	0.
29	0.23028	SLV1-NL	NonStatic	Max	-265.287	-3.569	0.	0.
29	0.46056	SLV1-NL	NonStatic	Max	-264.373	15.648	0.	0.
29	0.	SLV1-NL	NonStatic	Min	-266.221	-23.013	0.	0.
29	0.23028	SLV1-NL	NonStatic	Min	-265.287	-3.569	0.	0.
29	0.46056	SLV1-NL	NonStatic	Min	-264.373	15.648	0.	0.
29	0.	SLV2-NL	NonStatic	Max	-202.615	-58.178	0.	0.
29	0.23028	SLV2-NL	NonStatic	Max	-199.481	-39.083	0.	0.
29	0.46056	SLV2-NL	NonStatic	Max	-196.367	-20.214	0.	0.
29	0.	SLV2-NL	NonStatic	Min	-202.615	-58.178	0.	0.
29	0.23028	SLV2-NL	NonStatic	Min	-199.481	-39.083	0.	0.
29	0.46056	SLV2-NL	NonStatic	Min	-196.367	-20.214	0.	0.
29	0.	SLV3-NL	NonStatic	Max	-267.642	-24.022	0.	0.
29	0.23028	SLV3-NL	NonStatic	Max	-266.661	-4.28	0.	0.
29	0.46056	SLV3-NL	NonStatic	Max	-265.699	15.235	0.	0.
29	0.	SLV3-NL	NonStatic	Min	-267.642	-24.022	0.	0.
29	0.23028	SLV3-NL	NonStatic	Min	-266.661	-4.28	0.	0.
29	0.46056	SLV3-NL	NonStatic	Min	-265.699	15.235	0.	0.
29	0.	SLV4-NL	NonStatic	Max	-204.036	-59.184	0.	0.
29	0.23028	SLV4-NL	NonStatic	Max	-200.855	-39.79	0.	0.
29	0.46056	SLV4-NL	NonStatic	Max	-197.694	-20.623	0.	0.
29	0.	SLV4-NL	NonStatic	Min	-204.036	-59.184	0.	0.

Table: Element Forces - Frames, Part 1 of 2

Frame	Station	OutputCase	CaseType	StepType	P	V2	V3	T
	m				KN	KN	KN	KN-m
29	0.23028	SLV4-NL	NonStatic	Min	-200.855	-39.79	0.	0.
29	0.46056	SLV4-NL	NonStatic	Min	-197.694	-20.623	0.	0.
29	0.	SLV5-NL	NonStatic	Max	-209.824	-39.429	0.	0.
29	0.23028	SLV5-NL	NonStatic	Max	-208.174	-20.455	0.	0.
29	0.46056	SLV5-NL	NonStatic	Max	-206.545	-1.708	0.	0.
29	0.	SLV5-NL	NonStatic	Min	-209.824	-39.429	0.	0.
29	0.23028	SLV5-NL	NonStatic	Min	-208.174	-20.455	0.	0.
29	0.46056	SLV5-NL	NonStatic	Min	-206.545	-1.708	0.	0.
29	0.	SLV6-NL	NonStatic	Max	-190.71	-49.769	0.	0.
29	0.23028	SLV6-NL	NonStatic	Max	-188.4	-30.9	0.	0.
29	0.46056	SLV6-NL	NonStatic	Max	-186.112	-12.257	0.	0.
29	0.	SLV6-NL	NonStatic	Min	-190.71	-49.769	0.	0.
29	0.23028	SLV6-NL	NonStatic	Min	-188.4	-30.9	0.	0.
29	0.46056	SLV6-NL	NonStatic	Min	-186.112	-12.257	0.	0.
29	0.	SLV7-NL	NonStatic	Max	-214.564	-42.797	0.	0.
29	0.23028	SLV7-NL	NonStatic	Max	-212.757	-22.828	0.	0.
29	0.46056	SLV7-NL	NonStatic	Max	-210.971	-3.087	0.	0.
29	0.	SLV7-NL	NonStatic	Min	-214.564	-42.797	0.	0.
29	0.23028	SLV7-NL	NonStatic	Min	-212.757	-22.828	0.	0.
29	0.46056	SLV7-NL	NonStatic	Min	-210.971	-3.087	0.	0.
29	0.	SLV8-NL	NonStatic	Max	-195.447	-53.118	0.	0.
29	0.23028	SLV8-NL	NonStatic	Max	-192.98	-33.254	0.	0.
29	0.46056	SLV8-NL	NonStatic	Max	-190.534	-13.617	0.	0.
29	0.	SLV8-NL	NonStatic	Min	-195.447	-53.118	0.	0.
29	0.23028	SLV8-NL	NonStatic	Min	-192.98	-33.254	0.	0.
29	0.46056	SLV8-NL	NonStatic	Min	-190.534	-13.617	0.	0.
29	0.	SLV9-NL	NonStatic	Max	-242.424	-35.24	0.	0.
29	0.23028	SLV9-NL	NonStatic	Max	-240.658	-16.058	0.	0.
29	0.46056	SLV9-NL	NonStatic	Max	-238.913	2.896	0.	0.
29	0.	SLV9-NL	NonStatic	Min	-242.424	-35.24	0.	0.
29	0.23028	SLV9-NL	NonStatic	Min	-240.658	-16.058	0.	0.
29	0.46056	SLV9-NL	NonStatic	Min	-238.913	2.896	0.	0.
29	0.	SLV10-NL	NonStatic	Max	-169.234	-53.964	0.	0.
29	0.23028	SLV10-NL	NonStatic	Max	-166.971	-34.861	0.	0.
29	0.46056	SLV10-NL	NonStatic	Max	-164.729	-15.986	0.	0.
29	0.	SLV10-NL	NonStatic	Min	-169.234	-53.964	0.	0.
29	0.23028	SLV10-NL	NonStatic	Min	-166.971	-34.861	0.	0.
29	0.46056	SLV10-NL	NonStatic	Min	-164.729	-15.986	0.	0.
29	0.	SLV11-NL	NonStatic	Max	-242.321	-37.547	0.	0.
29	0.23028	SLV11-NL	NonStatic	Max	-240.468	-17.812	0.	0.
29	0.46056	SLV11-NL	NonStatic	Max	-238.635	1.696	0.	0.
29	0.	SLV11-NL	NonStatic	Min	-242.321	-37.547	0.	0.
29	0.23028	SLV11-NL	NonStatic	Min	-240.468	-17.812	0.	0.
29	0.46056	SLV11-NL	NonStatic	Min	-238.635	1.696	0.	0.
29	0.	SLV12-NL	NonStatic	Max	-169.128	-56.249	0.	0.
29	0.23028	SLV12-NL	NonStatic	Max	-166.777	-36.593	0.	0.
29	0.46056	SLV12-NL	NonStatic	Max	-164.447	-17.164	0.	0.
29	0.	SLV12-NL	NonStatic	Min	-169.128	-56.249	0.	0.
29	0.23028	SLV12-NL	NonStatic	Min	-166.777	-36.593	0.	0.
29	0.46056	SLV12-NL	NonStatic	Min	-164.447	-17.164	0.	0.
29	0.	SLV13-NL	NonStatic	Max	-205.001	-41.129	0.	0.
29	0.23028	SLV13-NL	NonStatic	Max	-203.164	-22.621	0.	0.
29	0.46056	SLV13-NL	NonStatic	Max	-201.347	-4.34	0.	0.
29	0.	SLV13-NL	NonStatic	Min	-205.001	-41.129	0.	0.

Table: Element Forces - Frames, Part 1 of 2

Frame	Station	OutputCase	CaseType	StepType	P	V2	V3	T
	m				KN	KN	KN	KN-m
29	0.23028	SLV13-NL	NonStatic	Min	-203.164	-22.621	0.	0.
29	0.46056	SLV13-NL	NonStatic	Min	-201.347	-4.34	0.	0.
29	0.	SLV14-NL	NonStatic	Max	-183.29	-46.493	0.	0.
29	0.23028	SLV14-NL	NonStatic	Max	-181.303	-28.008	0.	0.
29	0.46056	SLV14-NL	NonStatic	Max	-179.337	-9.751	0.	0.
29	0.	SLV14-NL	NonStatic	Min	-183.29	-46.493	0.	0.
29	0.23028	SLV14-NL	NonStatic	Min	-181.303	-28.008	0.	0.
29	0.46056	SLV14-NL	NonStatic	Min	-179.337	-9.751	0.	0.
29	0.	SLV15-NL	NonStatic	Max	-205.224	-48.772	0.	0.
29	0.23028	SLV15-NL	NonStatic	Max	-203.095	-28.419	0.	0.
29	0.46056	SLV15-NL	NonStatic	Max	-200.986	-8.293	0.	0.
29	0.	SLV15-NL	NonStatic	Min	-205.224	-48.772	0.	0.
29	0.23028	SLV15-NL	NonStatic	Min	-203.095	-28.419	0.	0.
29	0.46056	SLV15-NL	NonStatic	Min	-200.986	-8.293	0.	0.
29	0.	SLV16-NL	NonStatic	Max	-183.693	-53.96	0.	0.
29	0.23028	SLV16-NL	NonStatic	Max	-181.414	-33.63	0.	0.
29	0.46056	SLV16-NL	NonStatic	Max	-179.156	-13.527	0.	0.
29	0.	SLV16-NL	NonStatic	Min	-183.693	-53.96	0.	0.
29	0.23028	SLV16-NL	NonStatic	Min	-181.414	-33.63	0.	0.
29	0.46056	SLV16-NL	NonStatic	Min	-179.156	-13.527	0.	0.
30	0.	SLU 1-NL	NonStatic	Max	-292.659	-46.39	0.	0.
30	0.23028	SLU 1-NL	NonStatic	Max	-291.6	-15.582	0.	0.
30	0.46056	SLU 1-NL	NonStatic	Max	-290.541	15.227	0.	0.
30	0.	SLU 1-NL	NonStatic	Min	-292.659	-46.39	0.	0.
30	0.23028	SLU 1-NL	NonStatic	Min	-291.6	-15.582	0.	0.
30	0.46056	SLU 1-NL	NonStatic	Min	-290.541	15.227	0.	0.
30	0.	SLU 2-NL	NonStatic	Max	-187.907	-51.88	0.	0.
30	0.23028	SLU 2-NL	NonStatic	Max	-186.602	-21.084	0.	0.
30	0.46056	SLU 2-NL	NonStatic	Max	-185.296	9.711	0.	0.
30	0.	SLU 2-NL	NonStatic	Min	-187.907	-51.88	0.	0.
30	0.23028	SLU 2-NL	NonStatic	Min	-186.602	-21.084	0.	0.
30	0.46056	SLU 2-NL	NonStatic	Min	-185.296	9.711	0.	0.
30	0.	SLU 3-NL	NonStatic	Max	-284.554	-21.942	0.	0.
30	0.23028	SLU 3-NL	NonStatic	Max	-284.145	-3.536	0.	0.
30	0.46056	SLU 3-NL	NonStatic	Max	-283.735	14.87	0.	0.
30	0.	SLU 3-NL	NonStatic	Min	-284.554	-21.942	0.	0.
30	0.23028	SLU 3-NL	NonStatic	Min	-284.145	-3.536	0.	0.
30	0.46056	SLU 3-NL	NonStatic	Min	-283.735	14.87	0.	0.
30	0.	SLU 4-NL	NonStatic	Max	-277.593	-38.316	0.	0.
30	0.23028	SLU 4-NL	NonStatic	Max	-276.534	-7.508	0.	0.
30	0.46056	SLU 4-NL	NonStatic	Max	-275.474	23.3	0.	0.
30	0.	SLU 4-NL	NonStatic	Min	-277.593	-38.316	0.	0.
30	0.23028	SLU 4-NL	NonStatic	Min	-276.534	-7.508	0.	0.
30	0.46056	SLU 4-NL	NonStatic	Min	-275.474	23.3	0.	0.
30	0.	SLU 5-NL	NonStatic	Max	-276.025	-13.251	0.	0.
30	0.23028	SLU 5-NL	NonStatic	Max	-275.616	5.155	0.	0.
30	0.46056	SLU 5-NL	NonStatic	Max	-275.207	23.561	0.	0.
30	0.	SLU 5-NL	NonStatic	Min	-276.025	-13.251	0.	0.
30	0.23028	SLU 5-NL	NonStatic	Min	-275.616	5.155	0.	0.
30	0.46056	SLU 5-NL	NonStatic	Min	-275.207	23.561	0.	0.
30	0.	SLU 6-NL	NonStatic	Max	-279.011	-55.968	0.	0.
30	0.23028	SLU 6-NL	NonStatic	Max	-277.706	-25.173	0.	0.
30	0.46056	SLU 6-NL	NonStatic	Max	-276.401	5.622	0.	0.
30	0.	SLU 6-NL	NonStatic	Min	-279.011	-55.968	0.	0.

Table: Element Forces - Frames, Part 1 of 2

Frame	Station	OutputCase	CaseType	StepType	P	V2	V3	T
	m				KN	KN	KN	KN-m
30	0.23028	SLU 6-NL	NonStatic	Min	-277.706	-25.173	0.	0.
30	0.46056	SLU 6-NL	NonStatic	Min	-276.401	5.622	0.	0.
30	0.	SLU 7-NL	NonStatic	Max	-277.472	-31.45	0.	0.
30	0.23028	SLU 7-NL	NonStatic	Max	-276.817	-13.057	0.	0.
30	0.46056	SLU 7-NL	NonStatic	Max	-276.162	5.335	0.	0.
30	0.	SLU 7-NL	NonStatic	Min	-277.472	-31.45	0.	0.
30	0.23028	SLU 7-NL	NonStatic	Min	-276.817	-13.057	0.	0.
30	0.46056	SLU 7-NL	NonStatic	Min	-276.162	5.335	0.	0.
30	0.	SLE-C-NL	NonStatic	Max	-219.046	-34.586	0.	0.
30	0.23028	SLE-C-NL	NonStatic	Max	-218.252	-11.595	0.	0.
30	0.46056	SLE-C-NL	NonStatic	Max	-217.458	11.397	0.	0.
30	0.	SLE-C-NL	NonStatic	Min	-219.046	-34.586	0.	0.
30	0.23028	SLE-C-NL	NonStatic	Min	-218.252	-11.595	0.	0.
30	0.46056	SLE-C-NL	NonStatic	Min	-217.458	11.397	0.	0.
30	0.	SLE-F-1-NL	NonStatic	Max	-185.115	-34.522	0.	0.
30	0.23028	SLE-F-1-NL	NonStatic	Max	-184.267	-12.455	0.	0.
30	0.46056	SLE-F-1-NL	NonStatic	Max	-183.419	9.613	0.	0.
30	0.	SLE-F-1-NL	NonStatic	Min	-185.115	-34.522	0.	0.
30	0.23028	SLE-F-1-NL	NonStatic	Min	-184.267	-12.455	0.	0.
30	0.46056	SLE-F-1-NL	NonStatic	Min	-183.419	9.613	0.	0.
30	0.	SLE-F-2-NL	NonStatic	Max	-199.215	-23.397	0.	0.
30	0.23028	SLE-F-2-NL	NonStatic	Max	-198.642	-4.999	0.	0.
30	0.46056	SLE-F-2-NL	NonStatic	Max	-198.068	13.398	0.	0.
30	0.	SLE-F-2-NL	NonStatic	Min	-199.215	-23.397	0.	0.
30	0.23028	SLE-F-2-NL	NonStatic	Min	-198.642	-4.999	0.	0.
30	0.46056	SLE-F-2-NL	NonStatic	Min	-198.068	13.398	0.	0.
30	0.	SLE-F-3-NL	NonStatic	Max	-199.694	-29.406	0.	0.
30	0.23028	SLE-F-3-NL	NonStatic	Max	-199.039	-11.013	0.	0.
30	0.46056	SLE-F-3-NL	NonStatic	Max	-198.383	7.379	0.	0.
30	0.	SLE-F-3-NL	NonStatic	Min	-199.694	-29.406	0.	0.
30	0.23028	SLE-F-3-NL	NonStatic	Min	-199.039	-11.013	0.	0.
30	0.46056	SLE-F-3-NL	NonStatic	Min	-198.383	7.379	0.	0.
30	0.	SLE-QP-NL	NonStatic	Max	-179.795	-27.432	0.	0.
30	0.23028	SLE-QP-NL	NonStatic	Max	-179.139	-9.039	0.	0.
30	0.46056	SLE-QP-NL	NonStatic	Max	-178.484	9.354	0.	0.
30	0.	SLE-QP-NL	NonStatic	Min	-179.795	-27.432	0.	0.
30	0.23028	SLE-QP-NL	NonStatic	Min	-179.139	-9.039	0.	0.
30	0.46056	SLE-QP-NL	NonStatic	Min	-178.484	9.354	0.	0.
30	0.	SLV1-NL	NonStatic	Max	-264.56	-12.072	0.	0.
30	0.23028	SLV1-NL	NonStatic	Max	-264.543	7.122	0.	0.
30	0.46056	SLV1-NL	NonStatic	Max	-264.527	26.316	0.	0.
30	0.	SLV1-NL	NonStatic	Min	-264.56	-12.072	0.	0.
30	0.23028	SLV1-NL	NonStatic	Min	-264.543	7.122	0.	0.
30	0.46056	SLV1-NL	NonStatic	Min	-264.527	26.316	0.	0.
30	0.	SLV2-NL	NonStatic	Max	-193.179	-40.629	0.	0.
30	0.23028	SLV2-NL	NonStatic	Max	-191.845	-21.505	0.	0.
30	0.46056	SLV2-NL	NonStatic	Max	-190.512	-2.38	0.	0.
30	0.	SLV2-NL	NonStatic	Min	-193.179	-40.629	0.	0.
30	0.23028	SLV2-NL	NonStatic	Min	-191.845	-21.505	0.	0.
30	0.46056	SLV2-NL	NonStatic	Min	-190.512	-2.38	0.	0.
30	0.	SLV3-NL	NonStatic	Max	-265.836	-12.621	0.	0.
30	0.23028	SLV3-NL	NonStatic	Max	-265.803	6.879	0.	0.
30	0.46056	SLV3-NL	NonStatic	Max	-265.771	26.379	0.	0.
30	0.	SLV3-NL	NonStatic	Min	-265.836	-12.621	0.	0.

Table: Element Forces - Frames, Part 1 of 2

Frame	Station	OutputCase	CaseType	StepType	P	V2	V3	T
	m				KN	KN	KN	KN-m
30	0.23028	SLV3-NL	NonStatic	Min	-265.803	6.879	0.	0.
30	0.46056	SLV3-NL	NonStatic	Min	-265.771	26.379	0.	0.
30	0.	SLV4-NL	NonStatic	Max	-194.455	-41.175	0.	0.
30	0.23028	SLV4-NL	NonStatic	Max	-193.105	-21.744	0.	0.
30	0.46056	SLV4-NL	NonStatic	Max	-191.756	-2.313	0.	0.
30	0.	SLV4-NL	NonStatic	Min	-194.455	-41.175	0.	0.
30	0.23028	SLV4-NL	NonStatic	Min	-193.105	-21.744	0.	0.
30	0.46056	SLV4-NL	NonStatic	Min	-191.756	-2.313	0.	0.
30	0.	SLV5-NL	NonStatic	Max	-205.235	-23.289	0.	0.
30	0.23028	SLV5-NL	NonStatic	Max	-204.777	-4.476	0.	0.
30	0.46056	SLV5-NL	NonStatic	Max	-204.318	14.336	0.	0.
30	0.	SLV5-NL	NonStatic	Min	-205.235	-23.289	0.	0.
30	0.23028	SLV5-NL	NonStatic	Min	-204.777	-4.476	0.	0.
30	0.46056	SLV5-NL	NonStatic	Min	-204.318	14.336	0.	0.
30	0.	SLV6-NL	NonStatic	Max	-183.811	-31.644	0.	0.
30	0.23028	SLV6-NL	NonStatic	Max	-182.957	-12.852	0.	0.
30	0.46056	SLV6-NL	NonStatic	Max	-182.103	5.939	0.	0.
30	0.	SLV6-NL	NonStatic	Min	-183.811	-31.644	0.	0.
30	0.23028	SLV6-NL	NonStatic	Min	-182.957	-12.852	0.	0.
30	0.46056	SLV6-NL	NonStatic	Min	-182.103	5.939	0.	0.
30	0.	SLV7-NL	NonStatic	Max	-209.492	-25.123	0.	0.
30	0.23028	SLV7-NL	NonStatic	Max	-208.98	-5.289	0.	0.
30	0.46056	SLV7-NL	NonStatic	Max	-208.468	14.544	0.	0.
30	0.	SLV7-NL	NonStatic	Min	-209.492	-25.123	0.	0.
30	0.23028	SLV7-NL	NonStatic	Min	-208.98	-5.289	0.	0.
30	0.46056	SLV7-NL	NonStatic	Min	-208.468	14.544	0.	0.
30	0.	SLV8-NL	NonStatic	Max	-188.067	-33.459	0.	0.
30	0.23028	SLV8-NL	NonStatic	Max	-187.159	-13.646	0.	0.
30	0.46056	SLV8-NL	NonStatic	Max	-186.252	6.167	0.	0.
30	0.	SLV8-NL	NonStatic	Min	-188.067	-33.459	0.	0.
30	0.23028	SLV8-NL	NonStatic	Min	-187.159	-13.646	0.	0.
30	0.46056	SLV8-NL	NonStatic	Min	-186.252	6.167	0.	0.
30	0.	SLV9-NL	NonStatic	Max	-237.907	-22.093	0.	0.
30	0.23028	SLV9-NL	NonStatic	Max	-237.036	-3.073	0.	0.
30	0.46056	SLV9-NL	NonStatic	Max	-236.166	15.946	0.	0.
30	0.	SLV9-NL	NonStatic	Min	-237.907	-22.093	0.	0.
30	0.23028	SLV9-NL	NonStatic	Min	-237.036	-3.073	0.	0.
30	0.46056	SLV9-NL	NonStatic	Min	-236.166	15.946	0.	0.
30	0.	SLV10-NL	NonStatic	Max	-162.156	-33.117	0.	0.
30	0.23028	SLV10-NL	NonStatic	Max	-161.69	-14.076	0.	0.
30	0.46056	SLV10-NL	NonStatic	Max	-161.224	4.965	0.	0.
30	0.	SLV10-NL	NonStatic	Min	-162.156	-33.117	0.	0.
30	0.23028	SLV10-NL	NonStatic	Min	-161.69	-14.076	0.	0.
30	0.46056	SLV10-NL	NonStatic	Min	-161.224	4.965	0.	0.
30	0.	SLV11-NL	NonStatic	Max	-237.505	-23.257	0.	0.
30	0.23028	SLV11-NL	NonStatic	Max	-236.605	-3.673	0.	0.
30	0.46056	SLV11-NL	NonStatic	Max	-235.705	15.911	0.	0.
30	0.	SLV11-NL	NonStatic	Min	-237.505	-23.257	0.	0.
30	0.23028	SLV11-NL	NonStatic	Min	-236.605	-3.673	0.	0.
30	0.46056	SLV11-NL	NonStatic	Min	-235.705	15.911	0.	0.
30	0.	SLV12-NL	NonStatic	Max	-161.753	-34.259	0.	0.
30	0.23028	SLV12-NL	NonStatic	Max	-161.257	-14.654	0.	0.
30	0.46056	SLV12-NL	NonStatic	Max	-160.761	4.952	0.	0.
30	0.	SLV12-NL	NonStatic	Min	-161.753	-34.259	0.	0.

Table: Element Forces - Frames, Part 1 of 2

Frame	Station	OutputCase	CaseType	StepType	P	V2	V3	T
	m				KN	KN	KN	KN-m
30	0.23028	SLV12-NL	NonStatic	Min	-161.257	-14.654	0.	0.
30	0.46056	SLV12-NL	NonStatic	Min	-160.761	4.952	0.	0.
30	0.	SLV13-NL	NonStatic	Max	-199.79	-25.363	0.	0.
30	0.23028	SLV13-NL	NonStatic	Max	-199.096	-6.995	0.	0.
30	0.46056	SLV13-NL	NonStatic	Max	-198.401	11.374	0.	0.
30	0.	SLV13-NL	NonStatic	Min	-199.79	-25.363	0.	0.
30	0.23028	SLV13-NL	NonStatic	Min	-199.096	-6.995	0.	0.
30	0.46056	SLV13-NL	NonStatic	Min	-198.401	11.374	0.	0.
30	0.	SLV14-NL	NonStatic	Max	-177.336	-28.444	0.	0.
30	0.23028	SLV14-NL	NonStatic	Max	-176.762	-10.069	0.	0.
30	0.46056	SLV14-NL	NonStatic	Max	-176.189	8.306	0.	0.
30	0.	SLV14-NL	NonStatic	Min	-177.336	-28.444	0.	0.
30	0.23028	SLV14-NL	NonStatic	Min	-176.762	-10.069	0.	0.
30	0.46056	SLV14-NL	NonStatic	Min	-176.189	8.306	0.	0.
30	0.	SLV15-NL	NonStatic	Max	-199.018	-29.256	0.	0.
30	0.23028	SLV15-NL	NonStatic	Max	-198.225	-9.006	0.	0.
30	0.46056	SLV15-NL	NonStatic	Max	-197.432	11.245	0.	0.
30	0.	SLV15-NL	NonStatic	Min	-199.018	-29.256	0.	0.
30	0.23028	SLV15-NL	NonStatic	Min	-198.225	-9.006	0.	0.
30	0.46056	SLV15-NL	NonStatic	Min	-197.432	11.245	0.	0.
30	0.	SLV16-NL	NonStatic	Max	-176.761	-32.18	0.	0.
30	0.23028	SLV16-NL	NonStatic	Max	-176.089	-11.924	0.	0.
30	0.46056	SLV16-NL	NonStatic	Max	-175.417	8.333	0.	0.
30	0.	SLV16-NL	NonStatic	Min	-176.761	-32.18	0.	0.
30	0.23028	SLV16-NL	NonStatic	Min	-176.089	-11.924	0.	0.
30	0.46056	SLV16-NL	NonStatic	Min	-175.417	8.333	0.	0.
31	0.	SLU 1-NL	NonStatic	Max	-290.541	-15.227	0.	0.
31	0.23028	SLU 1-NL	NonStatic	Max	-291.6	15.582	0.	0.
31	0.46056	SLU 1-NL	NonStatic	Max	-292.659	46.39	0.	0.
31	0.	SLU 1-NL	NonStatic	Min	-290.541	-15.227	0.	0.
31	0.23028	SLU 1-NL	NonStatic	Min	-291.6	15.582	0.	0.
31	0.46056	SLU 1-NL	NonStatic	Min	-292.659	46.39	0.	0.
31	0.	SLU 2-NL	NonStatic	Max	-185.296	-9.711	0.	0.
31	0.23028	SLU 2-NL	NonStatic	Max	-186.602	21.084	0.	0.
31	0.46056	SLU 2-NL	NonStatic	Max	-187.907	51.88	0.	0.
31	0.	SLU 2-NL	NonStatic	Min	-185.296	-9.711	0.	0.
31	0.23028	SLU 2-NL	NonStatic	Min	-186.602	21.084	0.	0.
31	0.46056	SLU 2-NL	NonStatic	Min	-187.907	51.88	0.	0.
31	0.	SLU 3-NL	NonStatic	Max	-283.735	-14.87	0.	0.
31	0.23028	SLU 3-NL	NonStatic	Max	-284.145	3.536	0.	0.
31	0.46056	SLU 3-NL	NonStatic	Max	-284.554	21.942	0.	0.
31	0.	SLU 3-NL	NonStatic	Min	-283.735	-14.87	0.	0.
31	0.23028	SLU 3-NL	NonStatic	Min	-284.145	3.536	0.	0.
31	0.46056	SLU 3-NL	NonStatic	Min	-284.554	21.942	0.	0.
31	0.	SLU 4-NL	NonStatic	Max	-276.401	-5.622	0.	0.
31	0.23028	SLU 4-NL	NonStatic	Max	-277.706	25.173	0.	0.
31	0.46056	SLU 4-NL	NonStatic	Max	-279.011	55.968	0.	0.
31	0.	SLU 4-NL	NonStatic	Min	-276.401	-5.622	0.	0.
31	0.23028	SLU 4-NL	NonStatic	Min	-277.706	25.173	0.	0.
31	0.46056	SLU 4-NL	NonStatic	Min	-279.011	55.968	0.	0.
31	0.	SLU 5-NL	NonStatic	Max	-276.162	-5.335	0.	0.
31	0.23028	SLU 5-NL	NonStatic	Max	-276.817	13.057	0.	0.
31	0.46056	SLU 5-NL	NonStatic	Max	-277.472	31.45	0.	0.
31	0.	SLU 5-NL	NonStatic	Min	-276.162	-5.335	0.	0.

Table: Element Forces - Frames, Part 1 of 2

Frame	Station	OutputCase	CaseType	StepType	P	V2	V3	T
	m				KN	KN	KN	KN-m
31	0.23028	SLU 5-NL	NonStatic	Min	-276.817	13.057	0.	0.
31	0.46056	SLU 5-NL	NonStatic	Min	-277.472	31.45	0.	0.
31	0.	SLU 6-NL	NonStatic	Max	-275.474	-23.3	0.	0.
31	0.23028	SLU 6-NL	NonStatic	Max	-276.534	7.508	0.	0.
31	0.46056	SLU 6-NL	NonStatic	Max	-277.593	38.316	0.	0.
31	0.	SLU 6-NL	NonStatic	Min	-275.474	-23.3	0.	0.
31	0.23028	SLU 6-NL	NonStatic	Min	-276.534	7.508	0.	0.
31	0.46056	SLU 6-NL	NonStatic	Min	-277.593	38.316	0.	0.
31	0.	SLU 7-NL	NonStatic	Max	-275.207	-23.561	0.	0.
31	0.23028	SLU 7-NL	NonStatic	Max	-275.616	-5.155	0.	0.
31	0.46056	SLU 7-NL	NonStatic	Max	-276.025	13.251	0.	0.
31	0.	SLU 7-NL	NonStatic	Min	-275.207	-23.561	0.	0.
31	0.23028	SLU 7-NL	NonStatic	Min	-275.616	-5.155	0.	0.
31	0.46056	SLU 7-NL	NonStatic	Min	-276.025	13.251	0.	0.
31	0.	SLE-C-NL	NonStatic	Max	-217.458	-11.397	0.	0.
31	0.23028	SLE-C-NL	NonStatic	Max	-218.252	11.595	0.	0.
31	0.46056	SLE-C-NL	NonStatic	Max	-219.046	34.586	0.	0.
31	0.	SLE-C-NL	NonStatic	Min	-217.458	-11.397	0.	0.
31	0.23028	SLE-C-NL	NonStatic	Min	-218.252	11.595	0.	0.
31	0.46056	SLE-C-NL	NonStatic	Min	-219.046	34.586	0.	0.
31	0.	SLE-F-1-NL	NonStatic	Max	-183.419	-9.613	0.	0.
31	0.23028	SLE-F-1-NL	NonStatic	Max	-184.267	12.455	0.	0.
31	0.46056	SLE-F-1-NL	NonStatic	Max	-185.115	34.522	0.	0.
31	0.	SLE-F-1-NL	NonStatic	Min	-183.419	-9.613	0.	0.
31	0.23028	SLE-F-1-NL	NonStatic	Min	-184.267	12.455	0.	0.
31	0.46056	SLE-F-1-NL	NonStatic	Min	-185.115	34.522	0.	0.
31	0.	SLE-F-2-NL	NonStatic	Max	-198.383	-7.379	0.	0.
31	0.23028	SLE-F-2-NL	NonStatic	Max	-199.039	11.013	0.	0.
31	0.46056	SLE-F-2-NL	NonStatic	Max	-199.694	29.406	0.	0.
31	0.	SLE-F-2-NL	NonStatic	Min	-198.383	-7.379	0.	0.
31	0.23028	SLE-F-2-NL	NonStatic	Min	-199.039	11.013	0.	0.
31	0.46056	SLE-F-2-NL	NonStatic	Min	-199.694	29.406	0.	0.
31	0.	SLE-F-3-NL	NonStatic	Max	-198.068	-13.398	0.	0.
31	0.23028	SLE-F-3-NL	NonStatic	Max	-198.642	4.999	0.	0.
31	0.46056	SLE-F-3-NL	NonStatic	Max	-199.215	23.397	0.	0.
31	0.	SLE-F-3-NL	NonStatic	Min	-198.068	-13.398	0.	0.
31	0.23028	SLE-F-3-NL	NonStatic	Min	-198.642	4.999	0.	0.
31	0.46056	SLE-F-3-NL	NonStatic	Min	-199.215	23.397	0.	0.
31	0.	SLE-QP-NL	NonStatic	Max	-178.484	-9.354	0.	0.
31	0.23028	SLE-QP-NL	NonStatic	Max	-179.139	9.039	0.	0.
31	0.46056	SLE-QP-NL	NonStatic	Max	-179.795	27.432	0.	0.
31	0.	SLE-QP-NL	NonStatic	Min	-178.484	-9.354	0.	0.
31	0.23028	SLE-QP-NL	NonStatic	Min	-179.139	9.039	0.	0.
31	0.46056	SLE-QP-NL	NonStatic	Min	-179.795	27.432	0.	0.
31	0.	SLV1-NL	NonStatic	Max	-265.828	-1.479	0.	0.
31	0.23028	SLV1-NL	NonStatic	Max	-266.933	17.658	0.	0.
31	0.46056	SLV1-NL	NonStatic	Max	-268.039	36.795	0.	0.
31	0.	SLV1-NL	NonStatic	Min	-265.828	-1.479	0.	0.
31	0.23028	SLV1-NL	NonStatic	Min	-266.933	17.658	0.	0.
31	0.46056	SLV1-NL	NonStatic	Min	-268.039	36.795	0.	0.
31	0.	SLV2-NL	NonStatic	Max	-189.219	-22.281	0.	0.
31	0.23028	SLV2-NL	NonStatic	Max	-189.464	-3.099	0.	0.
31	0.46056	SLV2-NL	NonStatic	Max	-189.709	16.083	0.	0.
31	0.	SLV2-NL	NonStatic	Min	-189.219	-22.281	0.	0.

Table: Element Forces - Frames, Part 1 of 2

Frame	Station	OutputCase	CaseType	StepType	P	V2	V3	T
	m				KN	KN	KN	KN-m
31	0.23028	SLV2-NL	NonStatic	Min	-189.464	-3.099	0.	0.
31	0.46056	SLV2-NL	NonStatic	Min	-189.709	16.083	0.	0.
31	0.	SLV3-NL	NonStatic	Max	-267.072	-1.546	0.	0.
31	0.23028	SLV3-NL	NonStatic	Max	-268.194	17.897	0.	0.
31	0.46056	SLV3-NL	NonStatic	Max	-269.315	37.34	0.	0.
31	0.	SLV3-NL	NonStatic	Min	-267.072	-1.546	0.	0.
31	0.23028	SLV3-NL	NonStatic	Min	-268.194	17.897	0.	0.
31	0.46056	SLV3-NL	NonStatic	Min	-269.315	37.34	0.	0.
31	0.	SLV4-NL	NonStatic	Max	-190.464	-22.344	0.	0.
31	0.23028	SLV4-NL	NonStatic	Max	-190.724	-2.856	0.	0.
31	0.46056	SLV4-NL	NonStatic	Max	-190.985	16.633	0.	0.
31	0.	SLV4-NL	NonStatic	Min	-190.464	-22.344	0.	0.
31	0.23028	SLV4-NL	NonStatic	Min	-190.724	-2.856	0.	0.
31	0.46056	SLV4-NL	NonStatic	Min	-190.985	16.633	0.	0.
31	0.	SLV5-NL	NonStatic	Max	-204.697	-7.099	0.	0.
31	0.23028	SLV5-NL	NonStatic	Max	-205.482	11.696	0.	0.
31	0.46056	SLV5-NL	NonStatic	Max	-206.268	30.491	0.	0.
31	0.	SLV5-NL	NonStatic	Min	-204.697	-7.099	0.	0.
31	0.23028	SLV5-NL	NonStatic	Min	-205.482	11.696	0.	0.
31	0.46056	SLV5-NL	NonStatic	Min	-206.268	30.491	0.	0.
31	0.	SLV6-NL	NonStatic	Max	-181.726	-13.128	0.	0.
31	0.23028	SLV6-NL	NonStatic	Max	-182.254	5.681	0.	0.
31	0.46056	SLV6-NL	NonStatic	Max	-182.781	24.489	0.	0.
31	0.	SLV6-NL	NonStatic	Min	-181.726	-13.128	0.	0.
31	0.23028	SLV6-NL	NonStatic	Min	-182.254	5.681	0.	0.
31	0.46056	SLV6-NL	NonStatic	Min	-182.781	24.489	0.	0.
31	0.	SLV7-NL	NonStatic	Max	-208.846	-7.327	0.	0.
31	0.23028	SLV7-NL	NonStatic	Max	-209.685	12.49	0.	0.
31	0.46056	SLV7-NL	NonStatic	Max	-210.524	32.306	0.	0.
31	0.	SLV7-NL	NonStatic	Min	-208.846	-7.327	0.	0.
31	0.23028	SLV7-NL	NonStatic	Min	-209.685	12.49	0.	0.
31	0.46056	SLV7-NL	NonStatic	Min	-210.524	32.306	0.	0.
31	0.	SLV8-NL	NonStatic	Max	-185.876	-13.336	0.	0.
31	0.23028	SLV8-NL	NonStatic	Max	-186.457	6.494	0.	0.
31	0.46056	SLV8-NL	NonStatic	Max	-187.038	26.324	0.	0.
31	0.	SLV8-NL	NonStatic	Min	-185.876	-13.336	0.	0.
31	0.23028	SLV8-NL	NonStatic	Min	-186.457	6.494	0.	0.
31	0.46056	SLV8-NL	NonStatic	Min	-187.038	26.324	0.	0.
31	0.	SLV9-NL	NonStatic	Max	-236.539	-8.827	0.	0.
31	0.23028	SLV9-NL	NonStatic	Max	-236.777	10.226	0.	0.
31	0.46056	SLV9-NL	NonStatic	Max	-237.015	29.278	0.	0.
31	0.	SLV9-NL	NonStatic	Min	-236.539	-8.827	0.	0.
31	0.23028	SLV9-NL	NonStatic	Min	-236.777	10.226	0.	0.
31	0.46056	SLV9-NL	NonStatic	Min	-237.015	29.278	0.	0.
31	0.	SLV10-NL	NonStatic	Max	-160.859	-11.915	0.	0.
31	0.23028	SLV10-NL	NonStatic	Max	-161.958	7.093	0.	0.
31	0.46056	SLV10-NL	NonStatic	Max	-163.057	26.1	0.	0.
31	0.	SLV10-NL	NonStatic	Min	-160.859	-11.915	0.	0.
31	0.23028	SLV10-NL	NonStatic	Min	-161.958	7.093	0.	0.
31	0.46056	SLV10-NL	NonStatic	Min	-163.057	26.1	0.	0.
31	0.	SLV11-NL	NonStatic	Max	-236.077	-8.814	0.	0.
31	0.23028	SLV11-NL	NonStatic	Max	-236.344	10.803	0.	0.
31	0.46056	SLV11-NL	NonStatic	Max	-236.612	30.421	0.	0.
31	0.	SLV11-NL	NonStatic	Min	-236.077	-8.814	0.	0.

Table: Element Forces - Frames, Part 1 of 2

Frame	Station	OutputCase	CaseType	StepType	P	V2	V3	T
	m				KN	KN	KN	KN-m
31	0.23028	SLV11-NL	NonStatic	Min	-236.344	10.803	0.	0.
31	0.46056	SLV11-NL	NonStatic	Min	-236.612	30.421	0.	0.
31	0.	SLV12-NL	NonStatic	Max	-160.398	-11.88	0.	0.
31	0.23028	SLV12-NL	NonStatic	Max	-161.527	7.692	0.	0.
31	0.46056	SLV12-NL	NonStatic	Max	-162.655	27.265	0.	0.
31	0.	SLV12-NL	NonStatic	Min	-160.398	-11.88	0.	0.
31	0.23028	SLV12-NL	NonStatic	Min	-161.527	7.692	0.	0.
31	0.46056	SLV12-NL	NonStatic	Min	-162.655	27.265	0.	0.
31	0.	SLV13-NL	NonStatic	Max	-198.504	-9.427	0.	0.
31	0.23028	SLV13-NL	NonStatic	Max	-199.008	8.951	0.	0.
31	0.46056	SLV13-NL	NonStatic	Max	-199.513	27.33	0.	0.
31	0.	SLV13-NL	NonStatic	Min	-198.504	-9.427	0.	0.
31	0.23028	SLV13-NL	NonStatic	Min	-199.008	8.951	0.	0.
31	0.46056	SLV13-NL	NonStatic	Min	-199.513	27.33	0.	0.
31	0.	SLV14-NL	NonStatic	Max	-176.092	-10.156	0.	0.
31	0.23028	SLV14-NL	NonStatic	Max	-176.855	8.209	0.	0.
31	0.46056	SLV14-NL	NonStatic	Max	-177.618	26.574	0.	0.
31	0.	SLV14-NL	NonStatic	Min	-176.092	-10.156	0.	0.
31	0.23028	SLV14-NL	NonStatic	Min	-176.855	8.209	0.	0.
31	0.46056	SLV14-NL	NonStatic	Min	-177.618	26.574	0.	0.
31	0.	SLV15-NL	NonStatic	Max	-197.526	-9.454	0.	0.
31	0.23028	SLV15-NL	NonStatic	Max	-198.129	10.806	0.	0.
31	0.46056	SLV15-NL	NonStatic	Max	-198.732	31.066	0.	0.
31	0.	SLV15-NL	NonStatic	Min	-197.526	-9.454	0.	0.
31	0.23028	SLV15-NL	NonStatic	Min	-198.129	10.806	0.	0.
31	0.46056	SLV15-NL	NonStatic	Min	-198.732	31.066	0.	0.
31	0.	SLV16-NL	NonStatic	Max	-175.327	-10.049	0.	0.
31	0.23028	SLV16-NL	NonStatic	Max	-176.189	10.198	0.	0.
31	0.46056	SLV16-NL	NonStatic	Max	-177.05	30.445	0.	0.
31	0.	SLV16-NL	NonStatic	Min	-175.327	-10.049	0.	0.
31	0.23028	SLV16-NL	NonStatic	Min	-176.189	10.198	0.	0.
31	0.46056	SLV16-NL	NonStatic	Min	-177.05	30.445	0.	0.
32	0.	SLU 1-NL	NonStatic	Max	-295.905	15.544	0.	0.
32	0.23028	SLU 1-NL	NonStatic	Max	-299.06	46.125	0.	0.
32	0.46056	SLU 1-NL	NonStatic	Max	-302.242	77.	0.	0.
32	0.	SLU 1-NL	NonStatic	Min	-295.905	15.544	0.	0.
32	0.23028	SLU 1-NL	NonStatic	Min	-299.06	46.125	0.	0.
32	0.46056	SLU 1-NL	NonStatic	Min	-302.242	77.	0.	0.
32	0.	SLU 2-NL	NonStatic	Max	-192.301	31.954	0.	0.
32	0.23028	SLU 2-NL	NonStatic	Max	-196.186	62.418	0.	0.
32	0.46056	SLU 2-NL	NonStatic	Max	-200.102	93.177	0.	0.
32	0.	SLU 2-NL	NonStatic	Min	-192.301	31.954	0.	0.
32	0.23028	SLU 2-NL	NonStatic	Min	-196.186	62.418	0.	0.
32	0.46056	SLU 2-NL	NonStatic	Min	-200.102	93.177	0.	0.
32	0.	SLU 3-NL	NonStatic	Max	-285.289	-7.923	0.	0.
32	0.23028	SLU 3-NL	NonStatic	Max	-286.515	10.477	0.	0.
32	0.46056	SLU 3-NL	NonStatic	Max	-287.757	29.104	0.	0.
32	0.	SLU 3-NL	NonStatic	Min	-285.289	-7.923	0.	0.
32	0.23028	SLU 3-NL	NonStatic	Min	-286.515	10.477	0.	0.
32	0.46056	SLU 3-NL	NonStatic	Min	-287.757	29.104	0.	0.
32	0.	SLU 4-NL	NonStatic	Max	-283.333	26.497	0.	0.
32	0.23028	SLU 4-NL	NonStatic	Max	-287.218	56.962	0.	0.
32	0.46056	SLU 4-NL	NonStatic	Max	-291.134	87.721	0.	0.
32	0.	SLU 4-NL	NonStatic	Min	-283.333	26.497	0.	0.

Table: Element Forces - Frames, Part 1 of 2

Frame	Station	OutputCase	CaseType	StepType	P	V2	V3	T
	m				KN	KN	KN	KN-m
32	0.23028	SLU 4-NL	NonStatic	Min	-287.218	56.962	0.	0.
32	0.46056	SLU 4-NL	NonStatic	Min	-291.134	87.721	0.	0.
32	0.	SLU 5-NL	NonStatic	Max	-279.24	2.274	0.	0.
32	0.23028	SLU 5-NL	NonStatic	Max	-281.196	20.558	0.	0.
32	0.46056	SLU 5-NL	NonStatic	Max	-283.172	39.069	0.	0.
32	0.	SLU 5-NL	NonStatic	Min	-279.24	2.274	0.	0.
32	0.23028	SLU 5-NL	NonStatic	Min	-281.196	20.558	0.	0.
32	0.46056	SLU 5-NL	NonStatic	Min	-283.172	39.069	0.	0.
32	0.	SLU 6-NL	NonStatic	Max	-280.078	9.09	0.	0.
32	0.23028	SLU 6-NL	NonStatic	Max	-283.233	39.67	0.	0.
32	0.46056	SLU 6-NL	NonStatic	Max	-286.415	70.545	0.	0.
32	0.	SLU 6-NL	NonStatic	Min	-280.078	9.09	0.	0.
32	0.23028	SLU 6-NL	NonStatic	Min	-283.233	39.67	0.	0.
32	0.46056	SLU 6-NL	NonStatic	Min	-286.415	70.545	0.	0.
32	0.	SLU 7-NL	NonStatic	Max	-275.898	-15.674	0.	0.
32	0.23028	SLU 7-NL	NonStatic	Max	-277.124	2.725	0.	0.
32	0.46056	SLU 7-NL	NonStatic	Max	-278.366	21.352	0.	0.
32	0.	SLU 7-NL	NonStatic	Min	-275.898	-15.674	0.	0.
32	0.23028	SLU 7-NL	NonStatic	Min	-277.124	2.725	0.	0.
32	0.46056	SLU 7-NL	NonStatic	Min	-278.366	21.352	0.	0.
32	0.	SLE-C-NL	NonStatic	Max	-221.461	11.5	0.	0.
32	0.23028	SLE-C-NL	NonStatic	Max	-223.825	34.324	0.	0.
32	0.46056	SLE-C-NL	NonStatic	Max	-226.21	57.376	0.	0.
32	0.	SLE-C-NL	NonStatic	Min	-221.461	11.5	0.	0.
32	0.23028	SLE-C-NL	NonStatic	Min	-223.825	34.324	0.	0.
32	0.46056	SLE-C-NL	NonStatic	Min	-226.21	57.376	0.	0.
32	0.	SLE-F-1-NL	NonStatic	Max	-187.71	14.983	0.	0.
32	0.23028	SLE-F-1-NL	NonStatic	Max	-190.235	36.861	0.	0.
32	0.46056	SLE-F-1-NL	NonStatic	Max	-192.78	58.966	0.	0.
32	0.	SLE-F-1-NL	NonStatic	Min	-187.71	14.983	0.	0.
32	0.23028	SLE-F-1-NL	NonStatic	Min	-190.235	36.861	0.	0.
32	0.46056	SLE-F-1-NL	NonStatic	Min	-192.78	58.966	0.	0.
32	0.	SLE-F-2-NL	NonStatic	Max	-201.674	8.371	0.	0.
32	0.23028	SLE-F-2-NL	NonStatic	Max	-203.63	26.655	0.	0.
32	0.46056	SLE-F-2-NL	NonStatic	Max	-205.606	45.166	0.	0.
32	0.	SLE-F-2-NL	NonStatic	Min	-201.674	8.371	0.	0.
32	0.23028	SLE-F-2-NL	NonStatic	Min	-203.63	26.655	0.	0.
32	0.46056	SLE-F-2-NL	NonStatic	Min	-205.606	45.166	0.	0.
32	0.	SLE-F-3-NL	NonStatic	Max	-200.569	2.445	0.	0.
32	0.23028	SLE-F-3-NL	NonStatic	Max	-202.283	20.767	0.	0.
32	0.46056	SLE-F-3-NL	NonStatic	Max	-204.016	39.316	0.	0.
32	0.	SLE-F-3-NL	NonStatic	Min	-200.569	2.445	0.	0.
32	0.23028	SLE-F-3-NL	NonStatic	Min	-202.283	20.767	0.	0.
32	0.46056	SLE-F-3-NL	NonStatic	Min	-204.016	39.316	0.	0.
32	0.	SLE-QP-NL	NonStatic	Max	-181.677	8.488	0.	0.
32	0.23028	SLE-QP-NL	NonStatic	Max	-183.633	26.771	0.	0.
32	0.46056	SLE-QP-NL	NonStatic	Max	-185.609	45.282	0.	0.
32	0.	SLE-QP-NL	NonStatic	Min	-181.677	8.488	0.	0.
32	0.23028	SLE-QP-NL	NonStatic	Min	-183.633	26.771	0.	0.
32	0.46056	SLE-QP-NL	NonStatic	Min	-185.609	45.282	0.	0.
32	0.	SLV1-NL	NonStatic	Max	-270.417	8.575	0.	0.
32	0.23028	SLV1-NL	NonStatic	Max	-272.856	27.551	0.	0.
32	0.46056	SLV1-NL	NonStatic	Max	-275.316	46.753	0.	0.
32	0.	SLV1-NL	NonStatic	Min	-270.417	8.575	0.	0.

Table: Element Forces - Frames, Part 1 of 2

Frame	Station	OutputCase	CaseType	StepType	P	V2	V3	T
	m				KN	KN	KN	KN-m
32	0.23028	SLV1-NL	NonStatic	Min	-272.856	27.551	0.	0.
32	0.46056	SLV1-NL	NonStatic	Min	-275.316	46.753	0.	0.
32	0.	SLV2-NL	NonStatic	Max	-190.351	-3.835	0.	0.
32	0.23028	SLV2-NL	NonStatic	Max	-191.939	15.275	0.	0.
32	0.46056	SLV2-NL	NonStatic	Max	-193.548	34.613	0.	0.
32	0.	SLV2-NL	NonStatic	Min	-190.351	-3.835	0.	0.
32	0.23028	SLV2-NL	NonStatic	Min	-191.939	15.275	0.	0.
32	0.46056	SLV2-NL	NonStatic	Min	-193.548	34.613	0.	0.
32	0.	SLV3-NL	NonStatic	Max	-271.743	8.985	0.	0.
32	0.23028	SLV3-NL	NonStatic	Max	-274.229	28.258	0.	0.
32	0.46056	SLV3-NL	NonStatic	Max	-276.737	47.759	0.	0.
32	0.	SLV3-NL	NonStatic	Min	-271.743	8.985	0.	0.
32	0.23028	SLV3-NL	NonStatic	Min	-274.229	28.258	0.	0.
32	0.46056	SLV3-NL	NonStatic	Min	-276.737	47.759	0.	0.
32	0.	SLV4-NL	NonStatic	Max	-191.678	-3.422	0.	0.
32	0.23028	SLV4-NL	NonStatic	Max	-193.313	15.986	0.	0.
32	0.46056	SLV4-NL	NonStatic	Max	-194.969	35.622	0.	0.
32	0.	SLV4-NL	NonStatic	Min	-191.678	-3.422	0.	0.
32	0.23028	SLV4-NL	NonStatic	Min	-193.313	15.986	0.	0.
32	0.46056	SLV4-NL	NonStatic	Min	-194.969	35.622	0.	0.
32	0.	SLV5-NL	NonStatic	Max	-208.325	8.763	0.	0.
32	0.23028	SLV5-NL	NonStatic	Max	-210.412	27.438	0.	0.
32	0.46056	SLV5-NL	NonStatic	Max	-212.519	46.339	0.	0.
32	0.	SLV5-NL	NonStatic	Min	-208.325	8.763	0.	0.
32	0.23028	SLV5-NL	NonStatic	Min	-210.412	27.438	0.	0.
32	0.46056	SLV5-NL	NonStatic	Min	-212.519	46.339	0.	0.
32	0.	SLV6-NL	NonStatic	Max	-184.339	5.249	0.	0.
32	0.23028	SLV6-NL	NonStatic	Max	-186.171	23.964	0.	0.
32	0.46056	SLV6-NL	NonStatic	Max	-188.022	42.906	0.	0.
32	0.	SLV6-NL	NonStatic	Min	-184.339	5.249	0.	0.
32	0.23028	SLV6-NL	NonStatic	Min	-186.171	23.964	0.	0.
32	0.46056	SLV6-NL	NonStatic	Min	-188.022	42.906	0.	0.
32	0.	SLV7-NL	NonStatic	Max	-212.747	10.123	0.	0.
32	0.23028	SLV7-NL	NonStatic	Max	-214.991	29.792	0.	0.
32	0.46056	SLV7-NL	NonStatic	Max	-217.256	49.688	0.	0.
32	0.	SLV7-NL	NonStatic	Min	-212.747	10.123	0.	0.
32	0.23028	SLV7-NL	NonStatic	Min	-214.991	29.792	0.	0.
32	0.46056	SLV7-NL	NonStatic	Min	-217.256	49.688	0.	0.
32	0.	SLV8-NL	NonStatic	Max	-188.765	6.629	0.	0.
32	0.23028	SLV8-NL	NonStatic	Max	-190.753	26.338	0.	0.
32	0.46056	SLV8-NL	NonStatic	Max	-192.762	46.274	0.	0.
32	0.	SLV8-NL	NonStatic	Min	-188.765	6.629	0.	0.
32	0.23028	SLV8-NL	NonStatic	Min	-190.753	26.338	0.	0.
32	0.46056	SLV8-NL	NonStatic	Min	-192.762	46.274	0.	0.
32	0.	SLV9-NL	NonStatic	Max	-238.777	4.343	0.	0.
32	0.23028	SLV9-NL	NonStatic	Max	-240.345	23.326	0.	0.
32	0.46056	SLV9-NL	NonStatic	Max	-241.933	42.535	0.	0.
32	0.	SLV9-NL	NonStatic	Min	-238.777	4.343	0.	0.
32	0.23028	SLV9-NL	NonStatic	Min	-240.345	23.326	0.	0.
32	0.46056	SLV9-NL	NonStatic	Min	-241.933	42.535	0.	0.
32	0.	SLV10-NL	NonStatic	Max	-164.892	8.913	0.	0.
32	0.23028	SLV10-NL	NonStatic	Max	-167.311	27.761	0.	0.
32	0.46056	SLV10-NL	NonStatic	Max	-169.751	46.836	0.	0.
32	0.	SLV10-NL	NonStatic	Min	-164.892	8.913	0.	0.

Table: Element Forces - Frames, Part 1 of 2

Frame	Station	OutputCase	CaseType	StepType	P	V2	V3	T
	m				KN	KN	KN	KN-m
32	0.23028	SLV10-NL	NonStatic	Min	-167.311	27.761	0.	0.
32	0.46056	SLV10-NL	NonStatic	Min	-169.751	46.836	0.	0.
32	0.	SLV11-NL	NonStatic	Max	-238.495	5.521	0.	0.
32	0.23028	SLV11-NL	NonStatic	Max	-240.151	25.057	0.	0.
32	0.46056	SLV11-NL	NonStatic	Max	-241.827	44.821	0.	0.
32	0.	SLV11-NL	NonStatic	Min	-238.495	5.521	0.	0.
32	0.23028	SLV11-NL	NonStatic	Min	-240.151	25.057	0.	0.
32	0.46056	SLV11-NL	NonStatic	Min	-241.827	44.821	0.	0.
32	0.	SLV12-NL	NonStatic	Max	-164.614	10.113	0.	0.
32	0.23028	SLV12-NL	NonStatic	Max	-167.121	29.514	0.	0.
32	0.46056	SLV12-NL	NonStatic	Max	-169.648	49.143	0.	0.
32	0.	SLV12-NL	NonStatic	Min	-164.614	10.113	0.	0.
32	0.23028	SLV12-NL	NonStatic	Min	-167.121	29.514	0.	0.
32	0.46056	SLV12-NL	NonStatic	Min	-169.648	49.143	0.	0.
32	0.	SLV13-NL	NonStatic	Max	-201.277	6.325	0.	0.
32	0.23028	SLV13-NL	NonStatic	Max	-203.04	24.615	0.	0.
32	0.46056	SLV13-NL	NonStatic	Max	-204.824	43.131	0.	0.
32	0.	SLV13-NL	NonStatic	Min	-201.277	6.325	0.	0.
32	0.23028	SLV13-NL	NonStatic	Min	-203.04	24.615	0.	0.
32	0.46056	SLV13-NL	NonStatic	Min	-204.824	43.131	0.	0.
32	0.	SLV14-NL	NonStatic	Max	-179.423	7.862	0.	0.
32	0.23028	SLV14-NL	NonStatic	Max	-181.442	26.111	0.	0.
32	0.46056	SLV14-NL	NonStatic	Max	-183.481	44.587	0.	0.
32	0.	SLV14-NL	NonStatic	Min	-179.423	7.862	0.	0.
32	0.23028	SLV14-NL	NonStatic	Min	-181.442	26.111	0.	0.
32	0.46056	SLV14-NL	NonStatic	Min	-183.481	44.587	0.	0.
32	0.	SLV15-NL	NonStatic	Max	-200.891	10.123	0.	0.
32	0.23028	SLV15-NL	NonStatic	Max	-202.947	30.257	0.	0.
32	0.46056	SLV15-NL	NonStatic	Max	-205.023	50.619	0.	0.
32	0.	SLV15-NL	NonStatic	Min	-200.891	10.123	0.	0.
32	0.23028	SLV15-NL	NonStatic	Min	-202.947	30.257	0.	0.
32	0.46056	SLV15-NL	NonStatic	Min	-205.023	50.619	0.	0.
32	0.	SLV16-NL	NonStatic	Max	-179.263	11.771	0.	0.
32	0.23028	SLV16-NL	NonStatic	Max	-181.574	31.865	0.	0.
32	0.46056	SLV16-NL	NonStatic	Max	-183.906	52.187	0.	0.
32	0.	SLV16-NL	NonStatic	Min	-179.263	11.771	0.	0.
32	0.23028	SLV16-NL	NonStatic	Min	-181.574	31.865	0.	0.
32	0.46056	SLV16-NL	NonStatic	Min	-183.906	52.187	0.	0.
33	0.	SLU 1-NL	NonStatic	Max	-308.635	44.985	0.	0.
33	0.23028	SLU 1-NL	NonStatic	Max	-313.861	75.4	0.	0.
33	0.46056	SLU 1-NL	NonStatic	Max	-319.129	106.103	0.	0.
33	0.	SLU 1-NL	NonStatic	Min	-308.635	44.985	0.	0.
33	0.23028	SLU 1-NL	NonStatic	Min	-313.861	75.4	0.	0.
33	0.46056	SLU 1-NL	NonStatic	Min	-319.129	106.103	0.	0.
33	0.	SLU 2-NL	NonStatic	Max	-208.745	71.75	0.	0.
33	0.23028	SLU 2-NL	NonStatic	Max	-215.166	101.845	0.	0.
33	0.46056	SLU 2-NL	NonStatic	Max	-221.638	132.225	0.	0.
33	0.	SLU 2-NL	NonStatic	Min	-208.745	71.75	0.	0.
33	0.23028	SLU 2-NL	NonStatic	Min	-215.166	101.845	0.	0.
33	0.46056	SLU 2-NL	NonStatic	Min	-221.638	132.225	0.	0.
33	0.	SLU 3-NL	NonStatic	Max	-289.223	-1.135	0.	0.
33	0.23028	SLU 3-NL	NonStatic	Max	-291.284	17.472	0.	0.
33	0.46056	SLU 3-NL	NonStatic	Max	-293.371	36.302	0.	0.
33	0.	SLU 3-NL	NonStatic	Min	-289.223	-1.135	0.	0.

Table: Element Forces - Frames, Part 1 of 2

Frame	Station	OutputCase	CaseType	StepType	P	V2	V3	T
	m				KN	KN	KN	KN-m
33	0.23028	SLU 3-NL	NonStatic	Min	-291.284	17.472	0.	0.
33	0.46056	SLU 3-NL	NonStatic	Min	-293.371	36.302	0.	0.
33	0.	SLU 4-NL	NonStatic	Max	-298.709	56.808	0.	0.
33	0.23028	SLU 4-NL	NonStatic	Max	-305.13	86.903	0.	0.
33	0.46056	SLU 4-NL	NonStatic	Max	-311.601	117.283	0.	0.
33	0.	SLU 4-NL	NonStatic	Min	-298.709	56.808	0.	0.
33	0.23028	SLU 4-NL	NonStatic	Min	-305.13	86.903	0.	0.
33	0.46056	SLU 4-NL	NonStatic	Min	-311.601	117.283	0.	0.
33	0.	SLU 5-NL	NonStatic	Max	-285.704	9.255	0.	0.
33	0.23028	SLU 5-NL	NonStatic	Max	-288.961	27.541	0.	0.
33	0.46056	SLU 5-NL	NonStatic	Max	-292.251	46.049	0.	0.
33	0.	SLU 5-NL	NonStatic	Min	-285.704	9.255	0.	0.
33	0.23028	SLU 5-NL	NonStatic	Min	-288.961	27.541	0.	0.
33	0.46056	SLU 5-NL	NonStatic	Min	-292.251	46.049	0.	0.
33	0.	SLU 6-NL	NonStatic	Max	-292.22	40.22	0.	0.
33	0.23028	SLU 6-NL	NonStatic	Max	-297.445	70.635	0.	0.
33	0.46056	SLU 6-NL	NonStatic	Max	-302.713	101.338	0.	0.
33	0.	SLU 6-NL	NonStatic	Min	-292.22	40.22	0.	0.
33	0.23028	SLU 6-NL	NonStatic	Min	-297.445	70.635	0.	0.
33	0.46056	SLU 6-NL	NonStatic	Min	-302.713	101.338	0.	0.
33	0.	SLU 7-NL	NonStatic	Max	-279.073	-7.862	0.	0.
33	0.23028	SLU 7-NL	NonStatic	Max	-281.135	10.745	0.	0.
33	0.46056	SLU 7-NL	NonStatic	Max	-283.222	29.575	0.	0.
33	0.	SLU 7-NL	NonStatic	Min	-279.073	-7.862	0.	0.
33	0.23028	SLU 7-NL	NonStatic	Min	-281.135	10.745	0.	0.
33	0.46056	SLU 7-NL	NonStatic	Min	-283.222	29.575	0.	0.
33	0.	SLE-C-NL	NonStatic	Max	-230.968	33.416	0.	0.
33	0.23028	SLE-C-NL	NonStatic	Max	-234.886	56.131	0.	0.
33	0.46056	SLE-C-NL	NonStatic	Max	-238.837	79.067	0.	0.
33	0.	SLE-C-NL	NonStatic	Min	-230.968	33.416	0.	0.
33	0.23028	SLE-C-NL	NonStatic	Min	-234.886	56.131	0.	0.
33	0.46056	SLE-C-NL	NonStatic	Min	-238.837	79.067	0.	0.
33	0.	SLE-F-1-NL	NonStatic	Max	-197.888	38.492	0.	0.
33	0.23028	SLE-F-1-NL	NonStatic	Max	-202.066	60.216	0.	0.
33	0.46056	SLE-F-1-NL	NonStatic	Max	-206.277	82.161	0.	0.
33	0.	SLE-F-1-NL	NonStatic	Min	-197.888	38.492	0.	0.
33	0.23028	SLE-F-1-NL	NonStatic	Min	-202.066	60.216	0.	0.
33	0.46056	SLE-F-1-NL	NonStatic	Min	-206.277	82.161	0.	0.
33	0.	SLE-F-2-NL	NonStatic	Max	-209.201	23.427	0.	0.
33	0.23028	SLE-F-2-NL	NonStatic	Max	-212.458	41.713	0.	0.
33	0.46056	SLE-F-2-NL	NonStatic	Max	-215.748	60.221	0.	0.
33	0.	SLE-F-2-NL	NonStatic	Min	-209.201	23.427	0.	0.
33	0.23028	SLE-F-2-NL	NonStatic	Min	-212.458	41.713	0.	0.
33	0.46056	SLE-F-2-NL	NonStatic	Min	-215.748	60.221	0.	0.
33	0.	SLE-F-3-NL	NonStatic	Max	-207.008	17.775	0.	0.
33	0.23028	SLE-F-3-NL	NonStatic	Max	-209.873	36.167	0.	0.
33	0.46056	SLE-F-3-NL	NonStatic	Max	-212.771	54.779	0.	0.
33	0.	SLE-F-3-NL	NonStatic	Min	-207.008	17.775	0.	0.
33	0.23028	SLE-F-3-NL	NonStatic	Min	-209.873	36.167	0.	0.
33	0.46056	SLE-F-3-NL	NonStatic	Min	-212.771	54.779	0.	0.
33	0.	SLE-QP-NL	NonStatic	Max	-189.326	25.633	0.	0.
33	0.23028	SLE-QP-NL	NonStatic	Max	-192.583	43.919	0.	0.
33	0.46056	SLE-QP-NL	NonStatic	Max	-195.873	62.427	0.	0.
33	0.	SLE-QP-NL	NonStatic	Min	-189.326	25.633	0.	0.

Table: Element Forces - Frames, Part 1 of 2

Frame	Station	OutputCase	CaseType	StepType	P	V2	V3	T
	m				KN	KN	KN	KN-m
33	0.23028	SLE-QP-NL	NonStatic	Min	-192.583	43.919	0.	0.
33	0.46056	SLE-QP-NL	NonStatic	Min	-195.873	62.427	0.	0.
33	0.	SLV1-NL	NonStatic	Max	-278.695	17.719	0.	0.
33	0.23028	SLV1-NL	NonStatic	Max	-282.462	36.638	0.	0.
33	0.46056	SLV1-NL	NonStatic	Max	-286.263	55.778	0.	0.
33	0.	SLV1-NL	NonStatic	Min	-278.695	17.719	0.	0.
33	0.23028	SLV1-NL	NonStatic	Min	-282.462	36.638	0.	0.
33	0.46056	SLV1-NL	NonStatic	Min	-286.263	55.778	0.	0.
33	0.	SLV2-NL	NonStatic	Max	-196.106	14.192	0.	0.
33	0.23028	SLV2-NL	NonStatic	Max	-199.041	33.334	0.	0.
33	0.46056	SLV2-NL	NonStatic	Max	-202.009	52.698	0.	0.
33	0.	SLV2-NL	NonStatic	Min	-196.106	14.192	0.	0.
33	0.23028	SLV2-NL	NonStatic	Min	-199.041	33.334	0.	0.
33	0.46056	SLV2-NL	NonStatic	Min	-202.009	52.698	0.	0.
33	0.	SLV3-NL	NonStatic	Max	-280.213	18.57	0.	0.
33	0.23028	SLV3-NL	NonStatic	Max	-284.056	37.772	0.	0.
33	0.46056	SLV3-NL	NonStatic	Max	-287.932	57.195	0.	0.
33	0.	SLV3-NL	NonStatic	Min	-280.213	18.57	0.	0.
33	0.23028	SLV3-NL	NonStatic	Min	-284.056	37.772	0.	0.
33	0.46056	SLV3-NL	NonStatic	Min	-287.932	57.195	0.	0.
33	0.	SLV4-NL	NonStatic	Max	-197.625	15.047	0.	0.
33	0.23028	SLV4-NL	NonStatic	Max	-200.635	34.472	0.	0.
33	0.46056	SLV4-NL	NonStatic	Max	-203.679	54.118	0.	0.
33	0.	SLV4-NL	NonStatic	Min	-197.625	15.047	0.	0.
33	0.23028	SLV4-NL	NonStatic	Min	-200.635	34.472	0.	0.
33	0.46056	SLV4-NL	NonStatic	Min	-203.679	54.118	0.	0.
33	0.	SLV5-NL	NonStatic	Max	-216.198	23.871	0.	0.
33	0.23028	SLV5-NL	NonStatic	Max	-219.586	42.539	0.	0.
33	0.46056	SLV5-NL	NonStatic	Max	-223.007	61.428	0.	0.
33	0.	SLV5-NL	NonStatic	Min	-216.198	23.871	0.	0.
33	0.23028	SLV5-NL	NonStatic	Min	-219.586	42.539	0.	0.
33	0.46056	SLV5-NL	NonStatic	Min	-223.007	61.428	0.	0.
33	0.	SLV6-NL	NonStatic	Max	-191.477	23.018	0.	0.
33	0.23028	SLV6-NL	NonStatic	Max	-194.615	41.752	0.	0.
33	0.46056	SLV6-NL	NonStatic	Max	-197.786	60.708	0.	0.
33	0.	SLV6-NL	NonStatic	Min	-191.477	23.018	0.	0.
33	0.23028	SLV6-NL	NonStatic	Min	-194.615	41.752	0.	0.
33	0.46056	SLV6-NL	NonStatic	Min	-197.786	60.708	0.	0.
33	0.	SLV7-NL	NonStatic	Max	-221.259	26.706	0.	0.
33	0.23028	SLV7-NL	NonStatic	Max	-224.899	46.315	0.	0.
33	0.46056	SLV7-NL	NonStatic	Max	-228.573	66.146	0.	0.
33	0.	SLV7-NL	NonStatic	Min	-221.259	26.706	0.	0.
33	0.23028	SLV7-NL	NonStatic	Min	-224.899	46.315	0.	0.
33	0.46056	SLV7-NL	NonStatic	Min	-228.573	66.146	0.	0.
33	0.	SLV8-NL	NonStatic	Max	-196.543	25.871	0.	0.
33	0.23028	SLV8-NL	NonStatic	Max	-199.934	45.548	0.	0.
33	0.46056	SLV8-NL	NonStatic	Max	-203.357	65.445	0.	0.
33	0.	SLV8-NL	NonStatic	Min	-196.543	25.871	0.	0.
33	0.23028	SLV8-NL	NonStatic	Min	-199.934	45.548	0.	0.
33	0.46056	SLV8-NL	NonStatic	Min	-203.357	65.445	0.	0.
33	0.	SLV9-NL	NonStatic	Max	-245.054	17.013	0.	0.
33	0.23028	SLV9-NL	NonStatic	Max	-247.955	36.031	0.	0.
33	0.46056	SLV9-NL	NonStatic	Max	-250.89	55.27	0.	0.
33	0.	SLV9-NL	NonStatic	Min	-245.054	17.013	0.	0.

Table: Element Forces - Frames, Part 1 of 2

Frame	Station	OutputCase	CaseType	StepType	P	V2	V3	T
	m				KN	KN	KN	KN-m
33	0.23028	SLV9-NL	NonStatic	Min	-247.955	36.031	0.	0.
33	0.46056	SLV9-NL	NonStatic	Min	-250.89	55.27	0.	0.
33	0.	SLV10-NL	NonStatic	Max	-173.717	28.835	0.	0.
33	0.23028	SLV10-NL	NonStatic	Max	-177.451	47.63	0.	0.
33	0.46056	SLV10-NL	NonStatic	Max	-181.218	66.645	0.	0.
33	0.	SLV10-NL	NonStatic	Min	-173.717	28.835	0.	0.
33	0.23028	SLV10-NL	NonStatic	Min	-177.451	47.63	0.	0.
33	0.46056	SLV10-NL	NonStatic	Min	-181.218	66.645	0.	0.
33	0.	SLV11-NL	NonStatic	Max	-245.187	19.297	0.	0.
33	0.23028	SLV11-NL	NonStatic	Max	-248.231	38.847	0.	0.
33	0.46056	SLV11-NL	NonStatic	Max	-251.309	58.618	0.	0.
33	0.	SLV11-NL	NonStatic	Min	-245.187	19.297	0.	0.
33	0.23028	SLV11-NL	NonStatic	Min	-248.231	38.847	0.	0.
33	0.46056	SLV11-NL	NonStatic	Min	-251.309	58.618	0.	0.
33	0.	SLV12-NL	NonStatic	Max	-173.856	31.14	0.	0.
33	0.23028	SLV12-NL	NonStatic	Max	-177.732	50.467	0.	0.
33	0.46056	SLV12-NL	NonStatic	Max	-181.642	70.015	0.	0.
33	0.	SLV12-NL	NonStatic	Min	-173.856	31.14	0.	0.
33	0.23028	SLV12-NL	NonStatic	Min	-177.732	50.467	0.	0.
33	0.46056	SLV12-NL	NonStatic	Min	-181.642	70.015	0.	0.
33	0.	SLV13-NL	NonStatic	Max	-208.211	21.485	0.	0.
33	0.23028	SLV13-NL	NonStatic	Max	-211.237	39.803	0.	0.
33	0.46056	SLV13-NL	NonStatic	Max	-214.297	58.343	0.	0.
33	0.	SLV13-NL	NonStatic	Min	-208.211	21.485	0.	0.
33	0.23028	SLV13-NL	NonStatic	Min	-211.237	39.803	0.	0.
33	0.46056	SLV13-NL	NonStatic	Min	-214.297	58.343	0.	0.
33	0.	SLV14-NL	NonStatic	Max	-187.137	25.163	0.	0.
33	0.23028	SLV14-NL	NonStatic	Max	-190.413	43.415	0.	0.
33	0.46056	SLV14-NL	NonStatic	Max	-193.723	61.888	0.	0.
33	0.	SLV14-NL	NonStatic	Min	-187.137	25.163	0.	0.
33	0.23028	SLV14-NL	NonStatic	Min	-190.413	43.415	0.	0.
33	0.46056	SLV14-NL	NonStatic	Min	-193.723	61.888	0.	0.
33	0.	SLV15-NL	NonStatic	Max	-209.191	28.911	0.	0.
33	0.23028	SLV15-NL	NonStatic	Max	-212.693	49.004	0.	0.
33	0.46056	SLV15-NL	NonStatic	Max	-216.228	69.318	0.	0.
33	0.	SLV15-NL	NonStatic	Min	-209.191	28.911	0.	0.
33	0.23028	SLV15-NL	NonStatic	Min	-212.693	49.004	0.	0.
33	0.46056	SLV15-NL	NonStatic	Min	-216.228	69.318	0.	0.
33	0.	SLV16-NL	NonStatic	Max	-188.353	32.677	0.	0.
33	0.23028	SLV16-NL	NonStatic	Max	-192.105	52.703	0.	0.
33	0.46056	SLV16-NL	NonStatic	Max	-195.89	72.95	0.	0.
33	0.	SLV16-NL	NonStatic	Min	-188.353	32.677	0.	0.
33	0.23028	SLV16-NL	NonStatic	Min	-192.105	52.703	0.	0.
33	0.46056	SLV16-NL	NonStatic	Min	-195.89	72.95	0.	0.
34	0.	SLU 1-NL	NonStatic	Max	-328.471	72.163	0.	0.
34	0.23028	SLU 1-NL	NonStatic	Max	-335.68	102.174	0.	0.
34	0.46056	SLU 1-NL	NonStatic	Max	-343.003	132.74	0.	0.
34	0.	SLU 1-NL	NonStatic	Min	-328.471	72.163	0.	0.
34	0.23028	SLU 1-NL	NonStatic	Min	-335.68	102.174	0.	0.
34	0.46056	SLU 1-NL	NonStatic	Min	-343.003	132.74	0.	0.
34	0.	SLU 2-NL	NonStatic	Max	-234.245	108.334	0.	0.
34	0.23028	SLU 2-NL	NonStatic	Max	-243.078	137.721	0.	0.
34	0.46056	SLU 2-NL	NonStatic	Max	-252.046	167.655	0.	0.
34	0.	SLU 2-NL	NonStatic	Min	-234.245	108.334	0.	0.

Table: Element Forces - Frames, Part 1 of 2

Frame	Station	OutputCase	CaseType	StepType	P	V2	V3	T
	m				KN	KN	KN	KN-m
34	0.23028	SLU 2-NL	NonStatic	Min	-243.078	137.721	0.	0.
34	0.46056	SLU 2-NL	NonStatic	Min	-252.046	167.655	0.	0.
34	0.	SLU 3-NL	NonStatic	Max	-295.559	5.438	0.	0.
34	0.23028	SLU 3-NL	NonStatic	Max	-298.458	24.224	0.	0.
34	0.46056	SLU 3-NL	NonStatic	Max	-301.427	43.445	0.	0.
34	0.	SLU 3-NL	NonStatic	Min	-295.559	5.438	0.	0.
34	0.23028	SLU 3-NL	NonStatic	Min	-298.458	24.224	0.	0.
34	0.46056	SLU 3-NL	NonStatic	Min	-301.427	43.445	0.	0.
34	0.	SLU 4-NL	NonStatic	Max	-322.153	84.07	0.	0.
34	0.23028	SLU 4-NL	NonStatic	Max	-330.986	113.457	0.	0.
34	0.46056	SLU 4-NL	NonStatic	Max	-339.954	143.392	0.	0.
34	0.	SLU 4-NL	NonStatic	Min	-322.153	84.07	0.	0.
34	0.23028	SLU 4-NL	NonStatic	Min	-330.986	113.457	0.	0.
34	0.46056	SLU 4-NL	NonStatic	Min	-339.954	143.392	0.	0.
34	0.	SLU 5-NL	NonStatic	Max	-295.464	15.248	0.	0.
34	0.23028	SLU 5-NL	NonStatic	Max	-299.988	33.411	0.	0.
34	0.46056	SLU 5-NL	NonStatic	Max	-304.601	52.001	0.	0.
34	0.	SLU 5-NL	NonStatic	Min	-295.464	15.248	0.	0.
34	0.23028	SLU 5-NL	NonStatic	Min	-299.988	33.411	0.	0.
34	0.46056	SLU 5-NL	NonStatic	Min	-304.601	52.001	0.	0.
34	0.	SLU 6-NL	NonStatic	Max	-311.648	69.14	0.	0.
34	0.23028	SLU 6-NL	NonStatic	Max	-318.857	99.151	0.	0.
34	0.46056	SLU 6-NL	NonStatic	Max	-326.18	129.717	0.	0.
34	0.	SLU 6-NL	NonStatic	Min	-311.648	69.14	0.	0.
34	0.23028	SLU 6-NL	NonStatic	Min	-318.857	99.151	0.	0.
34	0.46056	SLU 6-NL	NonStatic	Min	-326.18	129.717	0.	0.
34	0.	SLU 7-NL	NonStatic	Max	-284.762	-0.192	0.	0.
34	0.23028	SLU 7-NL	NonStatic	Max	-287.662	18.595	0.	0.
34	0.46056	SLU 7-NL	NonStatic	Max	-290.63	37.815	0.	0.
34	0.	SLU 7-NL	NonStatic	Min	-284.762	-0.192	0.	0.
34	0.23028	SLU 7-NL	NonStatic	Min	-287.662	18.595	0.	0.
34	0.46056	SLU 7-NL	NonStatic	Min	-290.63	37.815	0.	0.
34	0.	SLE-C-NL	NonStatic	Max	-245.793	53.669	0.	0.
34	0.23028	SLE-C-NL	NonStatic	Max	-251.202	76.098	0.	0.
34	0.46056	SLE-C-NL	NonStatic	Max	-256.7	98.954	0.	0.
34	0.	SLE-C-NL	NonStatic	Min	-245.793	53.669	0.	0.
34	0.23028	SLE-C-NL	NonStatic	Min	-251.202	76.098	0.	0.
34	0.46056	SLE-C-NL	NonStatic	Min	-256.7	98.954	0.	0.
34	0.	SLE-F-1-NL	NonStatic	Max	-213.735	60.149	0.	0.
34	0.23028	SLE-F-1-NL	NonStatic	Max	-219.492	81.524	0.	0.
34	0.46056	SLE-F-1-NL	NonStatic	Max	-225.338	103.324	0.	0.
34	0.	SLE-F-1-NL	NonStatic	Min	-213.735	60.149	0.	0.
34	0.23028	SLE-F-1-NL	NonStatic	Min	-219.492	81.524	0.	0.
34	0.46056	SLE-F-1-NL	NonStatic	Min	-225.338	103.324	0.	0.
34	0.	SLE-F-2-NL	NonStatic	Max	-220.861	37.339	0.	0.
34	0.23028	SLE-F-2-NL	NonStatic	Max	-225.385	55.502	0.	0.
34	0.46056	SLE-F-2-NL	NonStatic	Max	-229.998	74.092	0.	0.
34	0.	SLE-F-2-NL	NonStatic	Min	-220.861	37.339	0.	0.
34	0.23028	SLE-F-2-NL	NonStatic	Min	-225.385	55.502	0.	0.
34	0.46056	SLE-F-2-NL	NonStatic	Min	-229.998	74.092	0.	0.
34	0.	SLE-F-3-NL	NonStatic	Max	-217.331	32.239	0.	0.
34	0.23028	SLE-F-3-NL	NonStatic	Max	-221.33	50.603	0.	0.
34	0.46056	SLE-F-3-NL	NonStatic	Max	-225.418	69.395	0.	0.
34	0.	SLE-F-3-NL	NonStatic	Min	-217.331	32.239	0.	0.

Table: Element Forces - Frames, Part 1 of 2

Frame	Station	OutputCase	CaseType	StepType	P	V2	V3	T
	m				KN	KN	KN	KN-m
34	0.23028	SLE-F-3-NL	NonStatic	Min	-221.33	50.603	0.	0.
34	0.46056	SLE-F-3-NL	NonStatic	Min	-225.418	69.395	0.	0.
34	0.	SLE-QP-NL	NonStatic	Max	-201.325	41.61	0.	0.
34	0.23028	SLE-QP-NL	NonStatic	Max	-205.85	59.773	0.	0.
34	0.46056	SLE-QP-NL	NonStatic	Max	-210.463	78.363	0.	0.
34	0.	SLE-QP-NL	NonStatic	Min	-201.325	41.61	0.	0.
34	0.23028	SLE-QP-NL	NonStatic	Min	-205.85	59.773	0.	0.
34	0.46056	SLE-QP-NL	NonStatic	Min	-210.463	78.363	0.	0.
34	0.	SLV1-NL	NonStatic	Max	-290.525	25.55	0.	0.
34	0.23028	SLV1-NL	NonStatic	Max	-295.579	44.282	0.	0.
34	0.46056	SLV1-NL	NonStatic	Max	-300.721	63.441	0.	0.
34	0.	SLV1-NL	NonStatic	Min	-290.525	25.55	0.	0.
34	0.23028	SLV1-NL	NonStatic	Min	-295.579	44.282	0.	0.
34	0.46056	SLV1-NL	NonStatic	Min	-300.721	63.441	0.	0.
34	0.	SLV2-NL	NonStatic	Max	-206.411	31.293	0.	0.
34	0.23028	SLV2-NL	NonStatic	Max	-210.66	50.334	0.	0.
34	0.46056	SLV2-NL	NonStatic	Max	-214.997	69.802	0.	0.
34	0.	SLV2-NL	NonStatic	Min	-206.411	31.293	0.	0.
34	0.23028	SLV2-NL	NonStatic	Min	-210.66	50.334	0.	0.
34	0.46056	SLV2-NL	NonStatic	Min	-214.997	69.802	0.	0.
34	0.	SLV3-NL	NonStatic	Max	-292.333	26.785	0.	0.
34	0.23028	SLV3-NL	NonStatic	Max	-297.487	45.776	0.	0.
34	0.46056	SLV3-NL	NonStatic	Max	-302.729	65.195	0.	0.
34	0.	SLV3-NL	NonStatic	Min	-292.333	26.785	0.	0.
34	0.23028	SLV3-NL	NonStatic	Min	-297.487	45.776	0.	0.
34	0.46056	SLV3-NL	NonStatic	Min	-302.729	65.195	0.	0.
34	0.	SLV4-NL	NonStatic	Max	-208.22	32.531	0.	0.
34	0.23028	SLV4-NL	NonStatic	Max	-212.569	51.832	0.	0.
34	0.46056	SLV4-NL	NonStatic	Max	-217.006	71.559	0.	0.
34	0.	SLV4-NL	NonStatic	Min	-208.22	32.531	0.	0.
34	0.23028	SLV4-NL	NonStatic	Min	-212.569	51.832	0.	0.
34	0.46056	SLV4-NL	NonStatic	Min	-217.006	71.559	0.	0.
34	0.	SLV5-NL	NonStatic	Max	-228.206	37.781	0.	0.
34	0.23028	SLV5-NL	NonStatic	Max	-232.862	56.318	0.	0.
34	0.46056	SLV5-NL	NonStatic	Max	-237.606	75.282	0.	0.
34	0.	SLV5-NL	NonStatic	Min	-228.206	37.781	0.	0.
34	0.23028	SLV5-NL	NonStatic	Min	-232.862	56.318	0.	0.
34	0.46056	SLV5-NL	NonStatic	Min	-237.606	75.282	0.	0.
34	0.	SLV6-NL	NonStatic	Max	-203.049	39.702	0.	0.
34	0.23028	SLV6-NL	NonStatic	Max	-207.463	58.331	0.	0.
34	0.46056	SLV6-NL	NonStatic	Max	-211.966	77.387	0.	0.
34	0.	SLV6-NL	NonStatic	Min	-203.049	39.702	0.	0.
34	0.23028	SLV6-NL	NonStatic	Min	-207.463	58.331	0.	0.
34	0.46056	SLV6-NL	NonStatic	Min	-211.966	77.387	0.	0.
34	0.	SLV7-NL	NonStatic	Max	-234.235	41.891	0.	0.
34	0.23028	SLV7-NL	NonStatic	Max	-239.223	61.294	0.	0.
34	0.46056	SLV7-NL	NonStatic	Max	-244.3	81.124	0.	0.
34	0.	SLV7-NL	NonStatic	Min	-234.235	41.891	0.	0.
34	0.23028	SLV7-NL	NonStatic	Min	-239.223	61.294	0.	0.
34	0.46056	SLV7-NL	NonStatic	Min	-244.3	81.124	0.	0.
34	0.	SLV8-NL	NonStatic	Max	-209.084	43.83	0.	0.
34	0.23028	SLV8-NL	NonStatic	Max	-213.831	63.326	0.	0.
34	0.46056	SLV8-NL	NonStatic	Max	-218.666	83.248	0.	0.
34	0.	SLV8-NL	NonStatic	Min	-209.084	43.83	0.	0.

Table: Element Forces - Frames, Part 1 of 2

Frame	Station	OutputCase	CaseType	StepType	P	V2	V3	T
	m				KN	KN	KN	KN-m
34	0.23028	SLV8-NL	NonStatic	Min	-213.831	63.326	0.	0.
34	0.46056	SLV8-NL	NonStatic	Min	-218.666	83.248	0.	0.
34	0.	SLV9-NL	NonStatic	Max	-255.293	28.742	0.	0.
34	0.23028	SLV9-NL	NonStatic	Max	-259.496	47.662	0.	0.
34	0.46056	SLV9-NL	NonStatic	Max	-263.787	67.009	0.	0.
34	0.	SLV9-NL	NonStatic	Min	-255.293	28.742	0.	0.
34	0.23028	SLV9-NL	NonStatic	Min	-259.496	47.662	0.	0.
34	0.46056	SLV9-NL	NonStatic	Min	-263.787	67.009	0.	0.
34	0.	SLV10-NL	NonStatic	Max	-187.192	47.338	0.	0.
34	0.23028	SLV10-NL	NonStatic	Max	-192.199	65.949	0.	0.
34	0.46056	SLV10-NL	NonStatic	Max	-197.295	84.987	0.	0.
34	0.	SLV10-NL	NonStatic	Min	-187.192	47.338	0.	0.
34	0.23028	SLV10-NL	NonStatic	Min	-192.199	65.949	0.	0.
34	0.46056	SLV10-NL	NonStatic	Min	-197.295	84.987	0.	0.
34	0.	SLV11-NL	NonStatic	Max	-256.059	32.028	0.	0.
34	0.23028	SLV11-NL	NonStatic	Max	-260.454	51.449	0.	0.
34	0.46056	SLV11-NL	NonStatic	Max	-264.938	71.297	0.	0.
34	0.	SLV11-NL	NonStatic	Min	-256.059	32.028	0.	0.
34	0.23028	SLV11-NL	NonStatic	Min	-260.454	51.449	0.	0.
34	0.46056	SLV11-NL	NonStatic	Min	-264.938	71.297	0.	0.
34	0.	SLV12-NL	NonStatic	Max	-187.966	50.645	0.	0.
34	0.23028	SLV12-NL	NonStatic	Max	-193.166	69.757	0.	0.
34	0.46056	SLV12-NL	NonStatic	Max	-198.454	89.296	0.	0.
34	0.	SLV12-NL	NonStatic	Min	-187.966	50.645	0.	0.
34	0.23028	SLV12-NL	NonStatic	Min	-193.166	69.757	0.	0.
34	0.46056	SLV12-NL	NonStatic	Min	-198.454	89.296	0.	0.
34	0.	SLV13-NL	NonStatic	Max	-219.222	35.623	0.	0.
34	0.23028	SLV13-NL	NonStatic	Max	-223.482	53.851	0.	0.
34	0.46056	SLV13-NL	NonStatic	Max	-227.83	72.504	0.	0.
34	0.	SLV13-NL	NonStatic	Min	-219.222	35.623	0.	0.
34	0.23028	SLV13-NL	NonStatic	Min	-223.482	53.851	0.	0.
34	0.46056	SLV13-NL	NonStatic	Min	-227.83	72.504	0.	0.
34	0.	SLV14-NL	NonStatic	Max	-199.13	41.299	0.	0.
34	0.23028	SLV14-NL	NonStatic	Max	-203.632	59.434	0.	0.
34	0.46056	SLV14-NL	NonStatic	Max	-208.222	77.995	0.	0.
34	0.	SLV14-NL	NonStatic	Min	-199.13	41.299	0.	0.
34	0.23028	SLV14-NL	NonStatic	Min	-203.632	59.434	0.	0.
34	0.46056	SLV14-NL	NonStatic	Min	-208.222	77.995	0.	0.
34	0.	SLV15-NL	NonStatic	Max	-222.289	46.336	0.	0.
34	0.23028	SLV15-NL	NonStatic	Max	-227.191	66.234	0.	0.
34	0.46056	SLV15-NL	NonStatic	Max	-232.18	86.558	0.	0.
34	0.	SLV15-NL	NonStatic	Min	-222.289	46.336	0.	0.
34	0.23028	SLV15-NL	NonStatic	Min	-227.191	66.234	0.	0.
34	0.46056	SLV15-NL	NonStatic	Min	-232.18	86.558	0.	0.
34	0.	SLV16-NL	NonStatic	Max	-202.442	52.074	0.	0.
34	0.23028	SLV16-NL	NonStatic	Max	-207.585	71.88	0.	0.
34	0.46056	SLV16-NL	NonStatic	Max	-212.816	92.112	0.	0.
34	0.	SLV16-NL	NonStatic	Min	-202.442	52.074	0.	0.
34	0.23028	SLV16-NL	NonStatic	Min	-207.585	71.88	0.	0.
34	0.46056	SLV16-NL	NonStatic	Min	-212.816	92.112	0.	0.
35	0.	SLU 1-NL	NonStatic	Max	-355.	96.159	0.	0.
35	0.23028	SLU 1-NL	NonStatic	Max	-364.117	125.796	0.	0.
35	0.46056	SLU 1-NL	NonStatic	Max	-373.373	155.96	0.	0.
35	0.	SLU 1-NL	NonStatic	Min	-355.	96.159	0.	0.

Table: Element Forces - Frames, Part 1 of 2

Frame	Station	OutputCase	CaseType	StepType	P	V2	V3	T
	m				KN	KN	KN	KN-m
35	0.23028	SLU 1-NL	NonStatic	Min	-364.117	125.796	0.	0.
35	0.46056	SLU 1-NL	NonStatic	Min	-373.373	155.96	0.	0.
35	0.	SLU 2-NL	NonStatic	Max	-268.19	140.391	0.	0.
35	0.23028	SLU 2-NL	NonStatic	Max	-279.319	169.002	0.	0.
35	0.46056	SLU 2-NL	NonStatic	Max	-290.611	198.129	0.	0.
35	0.	SLU 2-NL	NonStatic	Min	-268.19	140.391	0.	0.
35	0.23028	SLU 2-NL	NonStatic	Min	-279.319	169.002	0.	0.
35	0.46056	SLU 2-NL	NonStatic	Min	-290.611	198.129	0.	0.
35	0.	SLU 3-NL	NonStatic	Max	-304.317	11.699	0.	0.
35	0.23028	SLU 3-NL	NonStatic	Max	-308.085	30.836	0.	0.
35	0.46056	SLU 3-NL	NonStatic	Max	-311.936	50.391	0.	0.
35	0.	SLU 3-NL	NonStatic	Min	-304.317	11.699	0.	0.
35	0.23028	SLU 3-NL	NonStatic	Min	-308.085	30.836	0.	0.
35	0.46056	SLU 3-NL	NonStatic	Min	-311.936	50.391	0.	0.
35	0.	SLU 4-NL	NonStatic	Max	-353.08	107.071	0.	0.
35	0.23028	SLU 4-NL	NonStatic	Max	-364.21	135.683	0.	0.
35	0.46056	SLU 4-NL	NonStatic	Max	-375.502	164.81	0.	0.
35	0.	SLU 4-NL	NonStatic	Min	-353.08	107.071	0.	0.
35	0.23028	SLU 4-NL	NonStatic	Min	-364.21	135.683	0.	0.
35	0.46056	SLU 4-NL	NonStatic	Min	-375.502	164.81	0.	0.
35	0.	SLU 5-NL	NonStatic	Max	-308.368	19.877	0.	0.
35	0.23028	SLU 5-NL	NonStatic	Max	-314.147	37.989	0.	0.
35	0.46056	SLU 5-NL	NonStatic	Max	-320.034	56.506	0.	0.
35	0.	SLU 5-NL	NonStatic	Min	-308.368	19.877	0.	0.
35	0.23028	SLU 5-NL	NonStatic	Min	-314.147	37.989	0.	0.
35	0.46056	SLU 5-NL	NonStatic	Min	-320.034	56.506	0.	0.
35	0.	SLU 6-NL	NonStatic	Max	-337.952	94.911	0.	0.
35	0.23028	SLU 6-NL	NonStatic	Max	-347.07	124.548	0.	0.
35	0.46056	SLU 6-NL	NonStatic	Max	-356.326	154.712	0.	0.
35	0.	SLU 6-NL	NonStatic	Min	-337.952	94.911	0.	0.
35	0.23028	SLU 6-NL	NonStatic	Min	-347.07	124.548	0.	0.
35	0.46056	SLU 6-NL	NonStatic	Min	-356.326	154.712	0.	0.
35	0.	SLU 7-NL	NonStatic	Max	-292.991	7.229	0.	0.
35	0.23028	SLU 7-NL	NonStatic	Max	-296.759	26.366	0.	0.
35	0.46056	SLU 7-NL	NonStatic	Max	-300.61	45.921	0.	0.
35	0.	SLU 7-NL	NonStatic	Min	-292.991	7.229	0.	0.
35	0.23028	SLU 7-NL	NonStatic	Min	-296.759	26.366	0.	0.
35	0.46056	SLU 7-NL	NonStatic	Min	-300.61	45.921	0.	0.
35	0.	SLE-C-NL	NonStatic	Max	-265.637	71.579	0.	0.
35	0.23028	SLE-C-NL	NonStatic	Max	-272.486	93.752	0.	0.
35	0.46056	SLE-C-NL	NonStatic	Max	-279.442	116.33	0.	0.
35	0.	SLE-C-NL	NonStatic	Min	-265.637	71.579	0.	0.
35	0.23028	SLE-C-NL	NonStatic	Min	-272.486	93.752	0.	0.
35	0.46056	SLE-C-NL	NonStatic	Min	-279.442	116.33	0.	0.
35	0.	SLE-F-1-NL	NonStatic	Max	-234.904	79.204	0.	0.
35	0.23028	SLE-F-1-NL	NonStatic	Max	-242.174	100.241	0.	0.
35	0.46056	SLE-F-1-NL	NonStatic	Max	-249.551	121.684	0.	0.
35	0.	SLE-F-1-NL	NonStatic	Min	-234.904	79.204	0.	0.
35	0.23028	SLE-F-1-NL	NonStatic	Min	-242.174	100.241	0.	0.
35	0.46056	SLE-F-1-NL	NonStatic	Min	-249.551	121.684	0.	0.
35	0.	SLE-F-2-NL	NonStatic	Max	-236.483	49.645	0.	0.
35	0.23028	SLE-F-2-NL	NonStatic	Max	-242.263	67.756	0.	0.
35	0.46056	SLE-F-2-NL	NonStatic	Max	-248.149	86.274	0.	0.
35	0.	SLE-F-2-NL	NonStatic	Min	-236.483	49.645	0.	0.

Table: Element Forces - Frames, Part 1 of 2

Frame	Station	OutputCase	CaseType	StepType	P	V2	V3	T
	m				KN	KN	KN	KN-m
35	0.23028	SLE-F-2-NL	NonStatic	Min	-242.263	67.756	0.	0.
35	0.46056	SLE-F-2-NL	NonStatic	Min	-248.149	86.274	0.	0.
35	0.	SLE-F-3-NL	NonStatic	Max	-231.437	45.452	0.	0.
35	0.23028	SLE-F-3-NL	NonStatic	Max	-236.582	63.887	0.	0.
35	0.46056	SLE-F-3-NL	NonStatic	Max	-241.833	82.728	0.	0.
35	0.	SLE-F-3-NL	NonStatic	Min	-231.437	45.452	0.	0.
35	0.23028	SLE-F-3-NL	NonStatic	Min	-236.582	63.887	0.	0.
35	0.46056	SLE-F-3-NL	NonStatic	Min	-241.833	82.728	0.	0.
35	0.	SLE-QP-NL	NonStatic	Max	-217.501	55.935	0.	0.
35	0.23028	SLE-QP-NL	NonStatic	Max	-223.28	74.046	0.	0.
35	0.46056	SLE-QP-NL	NonStatic	Max	-229.167	92.564	0.	0.
35	0.	SLE-QP-NL	NonStatic	Min	-217.501	55.935	0.	0.
35	0.23028	SLE-QP-NL	NonStatic	Min	-223.28	74.046	0.	0.
35	0.46056	SLE-QP-NL	NonStatic	Min	-229.167	92.564	0.	0.
35	0.	SLV1-NL	NonStatic	Max	-305.705	31.659	0.	0.
35	0.23028	SLV1-NL	NonStatic	Max	-312.023	50.272	0.	0.
35	0.46056	SLV1-NL	NonStatic	Max	-318.449	69.291	0.	0.
35	0.	SLV1-NL	NonStatic	Min	-305.705	31.659	0.	0.
35	0.23028	SLV1-NL	NonStatic	Min	-312.023	50.272	0.	0.
35	0.46056	SLV1-NL	NonStatic	Min	-318.449	69.291	0.	0.
35	0.	SLV2-NL	NonStatic	Max	-221.116	46.946	0.	0.
35	0.23028	SLV2-NL	NonStatic	Max	-226.666	65.95	0.	0.
35	0.46056	SLV2-NL	NonStatic	Max	-232.324	85.36	0.	0.
35	0.	SLV2-NL	NonStatic	Min	-221.116	46.946	0.	0.
35	0.23028	SLV2-NL	NonStatic	Min	-226.666	65.95	0.	0.
35	0.46056	SLV2-NL	NonStatic	Min	-232.324	85.36	0.	0.
35	0.	SLV3-NL	NonStatic	Max	-307.885	33.194	0.	0.
35	0.23028	SLV3-NL	NonStatic	Max	-314.321	52.038	0.	0.
35	0.46056	SLV3-NL	NonStatic	Max	-320.865	71.288	0.	0.
35	0.	SLV3-NL	NonStatic	Min	-307.885	33.194	0.	0.
35	0.23028	SLV3-NL	NonStatic	Min	-314.321	52.038	0.	0.
35	0.46056	SLV3-NL	NonStatic	Min	-320.865	71.288	0.	0.
35	0.	SLV4-NL	NonStatic	Max	-223.298	48.483	0.	0.
35	0.23028	SLV4-NL	NonStatic	Max	-228.966	67.719	0.	0.
35	0.46056	SLV4-NL	NonStatic	Max	-234.741	87.36	0.	0.
35	0.	SLV4-NL	NonStatic	Min	-223.298	48.483	0.	0.
35	0.23028	SLV4-NL	NonStatic	Min	-228.966	67.719	0.	0.
35	0.46056	SLV4-NL	NonStatic	Min	-234.741	87.36	0.	0.
35	0.	SLV5-NL	NonStatic	Max	-244.174	50.033	0.	0.
35	0.23028	SLV5-NL	NonStatic	Max	-250.086	68.512	0.	0.
35	0.46056	SLV5-NL	NonStatic	Max	-256.105	87.398	0.	0.
35	0.	SLV5-NL	NonStatic	Min	-244.174	50.033	0.	0.
35	0.23028	SLV5-NL	NonStatic	Min	-250.086	68.512	0.	0.
35	0.46056	SLV5-NL	NonStatic	Min	-256.105	87.398	0.	0.
35	0.	SLV6-NL	NonStatic	Max	-218.894	54.807	0.	0.
35	0.23028	SLV6-NL	NonStatic	Max	-224.576	73.404	0.	0.
35	0.46056	SLV6-NL	NonStatic	Max	-230.364	92.407	0.	0.
35	0.	SLV6-NL	NonStatic	Min	-218.894	54.807	0.	0.
35	0.23028	SLV6-NL	NonStatic	Min	-224.576	73.404	0.	0.
35	0.46056	SLV6-NL	NonStatic	Min	-230.364	92.407	0.	0.
35	0.	SLV7-NL	NonStatic	Max	-251.441	55.143	0.	0.
35	0.23028	SLV7-NL	NonStatic	Max	-257.746	74.394	0.	0.
35	0.46056	SLV7-NL	NonStatic	Max	-264.158	94.051	0.	0.
35	0.	SLV7-NL	NonStatic	Min	-251.441	55.143	0.	0.

Table: Element Forces - Frames, Part 1 of 2

Frame	Station	OutputCase	CaseType	StepType	P	V2	V3	T
	m				KN	KN	KN	KN-m
35	0.23028	SLV7-NL	NonStatic	Min	-257.746	74.394	0.	0.
35	0.46056	SLV7-NL	NonStatic	Min	-264.158	94.051	0.	0.
35	0.	SLV8-NL	NonStatic	Max	-226.17	59.935	0.	0.
35	0.23028	SLV8-NL	NonStatic	Max	-232.245	79.303	0.	0.
35	0.46056	SLV8-NL	NonStatic	Max	-238.427	99.078	0.	0.
35	0.	SLV8-NL	NonStatic	Min	-226.17	59.935	0.	0.
35	0.23028	SLV8-NL	NonStatic	Min	-232.245	79.303	0.	0.
35	0.46056	SLV8-NL	NonStatic	Min	-238.427	99.078	0.	0.
35	0.	SLV9-NL	NonStatic	Max	-269.346	39.068	0.	0.
35	0.23028	SLV9-NL	NonStatic	Max	-274.838	57.957	0.	0.
35	0.46056	SLV9-NL	NonStatic	Max	-280.437	77.252	0.	0.
35	0.	SLV9-NL	NonStatic	Min	-269.346	39.068	0.	0.
35	0.23028	SLV9-NL	NonStatic	Min	-274.838	57.957	0.	0.
35	0.46056	SLV9-NL	NonStatic	Min	-280.437	77.252	0.	0.
35	0.	SLV10-NL	NonStatic	Max	-205.098	63.898	0.	0.
35	0.23028	SLV10-NL	NonStatic	Max	-211.358	82.396	0.	0.
35	0.46056	SLV10-NL	NonStatic	Max	-217.724	101.299	0.	0.
35	0.	SLV10-NL	NonStatic	Min	-205.098	63.898	0.	0.
35	0.23028	SLV10-NL	NonStatic	Min	-211.358	82.396	0.	0.
35	0.46056	SLV10-NL	NonStatic	Min	-217.724	101.299	0.	0.
35	0.	SLV11-NL	NonStatic	Max	-270.939	43.213	0.	0.
35	0.23028	SLV11-NL	NonStatic	Max	-276.666	62.564	0.	0.
35	0.46056	SLV11-NL	NonStatic	Max	-282.5	82.32	0.	0.
35	0.	SLV11-NL	NonStatic	Min	-270.939	43.213	0.	0.
35	0.23028	SLV11-NL	NonStatic	Min	-276.666	62.564	0.	0.
35	0.46056	SLV11-NL	NonStatic	Min	-282.5	82.32	0.	0.
35	0.	SLV12-NL	NonStatic	Max	-206.701	68.063	0.	0.
35	0.23028	SLV12-NL	NonStatic	Max	-213.196	87.022	0.	0.
35	0.46056	SLV12-NL	NonStatic	Max	-219.798	106.387	0.	0.
35	0.	SLV12-NL	NonStatic	Min	-206.701	68.063	0.	0.
35	0.23028	SLV12-NL	NonStatic	Min	-213.196	87.022	0.	0.
35	0.46056	SLV12-NL	NonStatic	Min	-219.798	106.387	0.	0.
35	0.	SLV13-NL	NonStatic	Max	-234.161	48.292	0.	0.
35	0.23028	SLV13-NL	NonStatic	Max	-239.647	66.505	0.	0.
35	0.46056	SLV13-NL	NonStatic	Max	-245.24	85.124	0.	0.
35	0.	SLV13-NL	NonStatic	Min	-234.161	48.292	0.	0.
35	0.23028	SLV13-NL	NonStatic	Min	-239.647	66.505	0.	0.
35	0.46056	SLV13-NL	NonStatic	Min	-245.24	85.124	0.	0.
35	0.	SLV14-NL	NonStatic	Max	-215.234	55.803	0.	0.
35	0.23028	SLV14-NL	NonStatic	Max	-220.95	73.898	0.	0.
35	0.46056	SLV14-NL	NonStatic	Max	-226.774	92.4	0.	0.
35	0.	SLV14-NL	NonStatic	Min	-215.234	55.803	0.	0.
35	0.23028	SLV14-NL	NonStatic	Min	-220.95	73.898	0.	0.
35	0.46056	SLV14-NL	NonStatic	Min	-226.774	92.4	0.	0.
35	0.	SLV15-NL	NonStatic	Max	-239.956	61.815	0.	0.
35	0.23028	SLV15-NL	NonStatic	Max	-246.227	81.567	0.	0.
35	0.46056	SLV15-NL	NonStatic	Max	-252.604	101.726	0.	0.
35	0.	SLV15-NL	NonStatic	Min	-239.956	61.815	0.	0.
35	0.23028	SLV15-NL	NonStatic	Min	-246.227	81.567	0.	0.
35	0.46056	SLV15-NL	NonStatic	Min	-252.604	101.726	0.	0.
35	0.	SLV16-NL	NonStatic	Max	-221.279	69.362	0.	0.
35	0.23028	SLV16-NL	NonStatic	Max	-227.779	88.997	0.	0.
35	0.46056	SLV16-NL	NonStatic	Max	-234.387	109.038	0.	0.
35	0.	SLV16-NL	NonStatic	Min	-221.279	69.362	0.	0.

Table: Element Forces - Frames, Part 1 of 2

Frame	Station	OutputCase	CaseType	StepType	P	V2	V3	T
	m				KN	KN	KN	KN-m
35	0.23028	SLV16-NL	NonStatic	Min	-227.779	88.997	0.	0.
35	0.46056	SLV16-NL	NonStatic	Min	-234.387	109.038	0.	0.
36	0.	SLU 1-NL	NonStatic	Max	-385.765	122.132	0.	0.
36	0.41857	SLU 1-NL	NonStatic	Max	-405.803	176.621	0.	0.
36	0.41857	SLU 1-NL	NonStatic	Max	-405.803	176.621	0.	0.
36	0.83713	SLU 1-NL	NonStatic	Max	-427.616	234.959	0.	0.
36	0.83713	SLU 1-NL	NonStatic	Max	-427.616	234.959	0.	0.
36	1.04642	SLU 1-NL	NonStatic	Max	-439.188	265.571	0.	0.
36	1.2557	SLU 1-NL	NonStatic	Max	-451.204	297.146	0.	0.
36	1.2557	SLU 1-NL	NonStatic	Max	-451.204	297.146	0.	0.
36	1.67427	SLU 1-NL	NonStatic	Max	-476.567	363.182	0.	0.
36	1.67427	SLU 1-NL	NonStatic	Max	-476.567	363.182	0.	0.
36	2.09284	SLU 1-NL	NonStatic	Max	-503.705	433.068	0.	0.
36	0.	SLU 1-NL	NonStatic	Min	-385.765	122.132	0.	0.
36	0.41857	SLU 1-NL	NonStatic	Min	-405.803	176.621	0.	0.
36	0.41857	SLU 1-NL	NonStatic	Min	-405.803	176.621	0.	0.
36	0.83713	SLU 1-NL	NonStatic	Min	-427.616	234.959	0.	0.
36	0.83713	SLU 1-NL	NonStatic	Min	-427.616	234.959	0.	0.
36	1.04642	SLU 1-NL	NonStatic	Min	-439.188	265.571	0.	0.
36	1.2557	SLU 1-NL	NonStatic	Min	-451.204	297.146	0.	0.
36	1.2557	SLU 1-NL	NonStatic	Min	-451.204	297.146	0.	0.
36	1.67427	SLU 1-NL	NonStatic	Min	-476.567	363.182	0.	0.
36	1.67427	SLU 1-NL	NonStatic	Min	-476.567	363.182	0.	0.
36	2.09284	SLU 1-NL	NonStatic	Min	-503.705	433.068	0.	0.
36	0.	SLU 2-NL	NonStatic	Max	-307.082	171.496	0.	0.
36	0.41857	SLU 2-NL	NonStatic	Max	-331.315	223.353	0.	0.
36	0.41857	SLU 2-NL	NonStatic	Max	-331.315	223.353	0.	0.
36	0.83713	SLU 2-NL	NonStatic	Max	-357.429	278.992	0.	0.
36	0.83713	SLU 2-NL	NonStatic	Max	-357.429	278.992	0.	0.
36	1.04642	SLU 2-NL	NonStatic	Max	-371.191	308.231	0.	0.
36	1.2557	SLU 2-NL	NonStatic	Max	-385.423	338.415	0.	0.
36	1.2557	SLU 2-NL	NonStatic	Max	-385.423	338.415	0.	0.
36	1.67427	SLU 2-NL	NonStatic	Max	-415.299	401.62	0.	0.
36	1.67427	SLU 2-NL	NonStatic	Max	-415.299	401.62	0.	0.
36	2.09284	SLU 2-NL	NonStatic	Max	-447.056	468.608	0.	0.
36	0.	SLU 2-NL	NonStatic	Min	-307.082	171.496	0.	0.
36	0.41857	SLU 2-NL	NonStatic	Min	-331.315	223.353	0.	0.
36	0.41857	SLU 2-NL	NonStatic	Min	-331.315	223.353	0.	0.
36	0.83713	SLU 2-NL	NonStatic	Min	-357.429	278.992	0.	0.
36	0.83713	SLU 2-NL	NonStatic	Min	-357.429	278.992	0.	0.
36	1.04642	SLU 2-NL	NonStatic	Min	-371.191	308.231	0.	0.
36	1.2557	SLU 2-NL	NonStatic	Min	-385.423	338.415	0.	0.
36	1.2557	SLU 2-NL	NonStatic	Min	-385.423	338.415	0.	0.
36	1.67427	SLU 2-NL	NonStatic	Min	-415.299	401.62	0.	0.
36	1.67427	SLU 2-NL	NonStatic	Min	-415.299	401.62	0.	0.
36	2.09284	SLU 2-NL	NonStatic	Min	-447.056	468.608	0.	0.
36	0.	SLU 3-NL	NonStatic	Max	-315.181	22.447	0.	0.
36	0.41857	SLU 3-NL	NonStatic	Max	-323.904	58.9	0.	0.
36	0.41857	SLU 3-NL	NonStatic	Max	-323.904	58.9	0.	0.
36	0.83713	SLU 3-NL	NonStatic	Max	-333.886	98.38	0.	0.
36	0.83713	SLU 3-NL	NonStatic	Max	-333.886	98.38	0.	0.
36	1.04642	SLU 3-NL	NonStatic	Max	-339.35	119.255	0.	0.
36	1.2557	SLU 3-NL	NonStatic	Max	-345.128	140.887	0.	0.
36	1.2557	SLU 3-NL	NonStatic	Max	-345.128	140.887	0.	0.

Table: Element Forces - Frames, Part 1 of 2

Frame	Station	OutputCase	CaseType	StepType	P	V2	V3	T
	m				KN	KN	KN	KN-m
36	1.67427	SLU 3-NL	NonStatic	Max	-357.629	186.423	0.	0.
36	1.67427	SLU 3-NL	NonStatic	Max	-357.629	186.423	0.	0.
36	2.09284	SLU 3-NL	NonStatic	Max	-371.39	234.985	0.	0.
36	0.	SLU 3-NL	NonStatic	Min	-315.181	22.447	0.	0.
36	0.41857	SLU 3-NL	NonStatic	Min	-323.904	58.9	0.	0.
36	0.41857	SLU 3-NL	NonStatic	Min	-323.904	58.9	0.	0.
36	0.83713	SLU 3-NL	NonStatic	Min	-333.886	98.38	0.	0.
36	0.83713	SLU 3-NL	NonStatic	Min	-333.886	98.38	0.	0.
36	1.04642	SLU 3-NL	NonStatic	Min	-339.35	119.255	0.	0.
36	1.2557	SLU 3-NL	NonStatic	Min	-345.128	140.887	0.	0.
36	1.2557	SLU 3-NL	NonStatic	Min	-345.128	140.887	0.	0.
36	1.67427	SLU 3-NL	NonStatic	Min	-357.629	186.423	0.	0.
36	1.67427	SLU 3-NL	NonStatic	Min	-357.629	186.423	0.	0.
36	2.09284	SLU 3-NL	NonStatic	Min	-371.39	234.985	0.	0.
36	0.	SLU 4-NL	NonStatic	Max	-388.672	130.758	0.	0.
36	0.41857	SLU 4-NL	NonStatic	Max	-412.905	182.614	0.	0.
36	0.41857	SLU 4-NL	NonStatic	Max	-412.905	182.614	0.	0.
36	0.83713	SLU 4-NL	NonStatic	Max	-439.019	238.254	0.	0.
36	0.83713	SLU 4-NL	NonStatic	Max	-439.019	238.254	0.	0.
36	1.04642	SLU 4-NL	NonStatic	Max	-452.781	267.492	0.	0.
36	1.2557	SLU 4-NL	NonStatic	Max	-467.014	297.676	0.	0.
36	1.2557	SLU 4-NL	NonStatic	Max	-467.014	297.677	0.	0.
36	1.67427	SLU 4-NL	NonStatic	Max	-496.89	360.882	0.	0.
36	1.67427	SLU 4-NL	NonStatic	Max	-496.89	360.882	0.	0.
36	2.09284	SLU 4-NL	NonStatic	Max	-528.647	427.87	0.	0.
36	0.	SLU 4-NL	NonStatic	Min	-388.672	130.758	0.	0.
36	0.41857	SLU 4-NL	NonStatic	Min	-412.905	182.614	0.	0.
36	0.41857	SLU 4-NL	NonStatic	Min	-412.905	182.614	0.	0.
36	0.83713	SLU 4-NL	NonStatic	Min	-439.019	238.254	0.	0.
36	0.83713	SLU 4-NL	NonStatic	Min	-439.019	238.254	0.	0.
36	1.04642	SLU 4-NL	NonStatic	Min	-452.781	267.492	0.	0.
36	1.2557	SLU 4-NL	NonStatic	Min	-467.014	297.676	0.	0.
36	1.2557	SLU 4-NL	NonStatic	Min	-467.014	297.677	0.	0.
36	1.67427	SLU 4-NL	NonStatic	Min	-496.89	360.882	0.	0.
36	1.67427	SLU 4-NL	NonStatic	Min	-496.89	360.882	0.	0.
36	2.09284	SLU 4-NL	NonStatic	Min	-528.647	427.87	0.	0.
36	0.	SLU 5-NL	NonStatic	Max	-323.791	27.817	0.	0.
36	0.41857	SLU 5-NL	NonStatic	Max	-336.709	61.638	0.	0.
36	0.41857	SLU 5-NL	NonStatic	Max	-336.709	61.638	0.	0.
36	0.83713	SLU 5-NL	NonStatic	Max	-350.992	98.42	0.	0.
36	0.83713	SLU 5-NL	NonStatic	Max	-350.992	98.42	0.	0.
36	1.04642	SLU 5-NL	NonStatic	Max	-358.646	117.922	0.	0.
36	1.2557	SLU 5-NL	NonStatic	Max	-366.641	138.163	0.	0.
36	1.2557	SLU 5-NL	NonStatic	Max	-366.641	138.163	0.	0.
36	1.67427	SLU 5-NL	NonStatic	Max	-383.655	180.867	0.	0.
36	1.67427	SLU 5-NL	NonStatic	Max	-383.655	180.867	0.	0.
36	2.09284	SLU 5-NL	NonStatic	Max	-402.034	226.532	0.	0.
36	0.	SLU 5-NL	NonStatic	Min	-323.791	27.817	0.	0.
36	0.41857	SLU 5-NL	NonStatic	Min	-336.709	61.638	0.	0.
36	0.41857	SLU 5-NL	NonStatic	Min	-336.709	61.638	0.	0.
36	0.83713	SLU 5-NL	NonStatic	Min	-350.992	98.42	0.	0.
36	0.83713	SLU 5-NL	NonStatic	Min	-350.992	98.42	0.	0.
36	1.04642	SLU 5-NL	NonStatic	Min	-358.646	117.922	0.	0.
36	1.2557	SLU 5-NL	NonStatic	Min	-366.641	138.163	0.	0.

Table: Element Forces - Frames, Part 1 of 2

Frame	Station	OutputCase	CaseType	StepType	P	V2	V3	T
	m				KN	KN	KN	KN-m
36	1.2557	SLU 5-NL	NonStatic	Min	-366.641	138.163	0.	0.
36	1.67427	SLU 5-NL	NonStatic	Min	-383.655	180.867	0.	0.
36	1.67427	SLU 5-NL	NonStatic	Min	-383.655	180.867	0.	0.
36	2.09284	SLU 5-NL	NonStatic	Min	-402.034	226.532	0.	0.
36	0.	SLU 6-NL	NonStatic	Max	-368.675	122.405	0.	0.
36	0.41857	SLU 6-NL	NonStatic	Max	-388.713	176.894	0.	0.
36	0.41857	SLU 6-NL	NonStatic	Max	-388.713	176.894	0.	0.
36	0.83713	SLU 6-NL	NonStatic	Max	-410.526	235.232	0.	0.
36	0.83713	SLU 6-NL	NonStatic	Max	-410.526	235.232	0.	0.
36	1.04642	SLU 6-NL	NonStatic	Max	-422.098	265.844	0.	0.
36	1.2557	SLU 6-NL	NonStatic	Max	-434.114	297.419	0.	0.
36	1.2557	SLU 6-NL	NonStatic	Max	-434.114	297.419	0.	0.
36	1.67427	SLU 6-NL	NonStatic	Max	-459.477	363.455	0.	0.
36	1.67427	SLU 6-NL	NonStatic	Max	-459.477	363.455	0.	0.
36	2.09284	SLU 6-NL	NonStatic	Max	-486.615	433.341	0.	0.
36	0.	SLU 6-NL	NonStatic	Min	-368.675	122.405	0.	0.
36	0.41857	SLU 6-NL	NonStatic	Min	-388.713	176.894	0.	0.
36	0.41857	SLU 6-NL	NonStatic	Min	-388.713	176.894	0.	0.
36	0.83713	SLU 6-NL	NonStatic	Min	-410.526	235.232	0.	0.
36	0.83713	SLU 6-NL	NonStatic	Min	-410.526	235.232	0.	0.
36	1.04642	SLU 6-NL	NonStatic	Min	-422.098	265.844	0.	0.
36	1.2557	SLU 6-NL	NonStatic	Min	-434.114	297.419	0.	0.
36	1.2557	SLU 6-NL	NonStatic	Min	-434.114	297.419	0.	0.
36	1.67427	SLU 6-NL	NonStatic	Min	-459.477	363.455	0.	0.
36	1.67427	SLU 6-NL	NonStatic	Min	-459.477	363.455	0.	0.
36	2.09284	SLU 6-NL	NonStatic	Min	-486.615	433.341	0.	0.
36	0.	SLU 7-NL	NonStatic	Max	-303.503	19.001	0.	0.
36	0.41857	SLU 7-NL	NonStatic	Max	-312.226	55.454	0.	0.
36	0.41857	SLU 7-NL	NonStatic	Max	-312.226	55.454	0.	0.
36	0.83713	SLU 7-NL	NonStatic	Max	-322.208	94.934	0.	0.
36	0.83713	SLU 7-NL	NonStatic	Max	-322.208	94.934	0.	0.
36	1.04642	SLU 7-NL	NonStatic	Max	-327.671	115.81	0.	0.
36	1.2557	SLU 7-NL	NonStatic	Max	-333.45	137.442	0.	0.
36	1.2557	SLU 7-NL	NonStatic	Max	-333.45	137.442	0.	0.
36	1.67427	SLU 7-NL	NonStatic	Max	-345.951	182.977	0.	0.
36	1.67427	SLU 7-NL	NonStatic	Max	-345.951	182.977	0.	0.
36	2.09284	SLU 7-NL	NonStatic	Max	-359.711	231.54	0.	0.
36	0.	SLU 7-NL	NonStatic	Min	-303.503	19.001	0.	0.
36	0.41857	SLU 7-NL	NonStatic	Min	-312.226	55.454	0.	0.
36	0.41857	SLU 7-NL	NonStatic	Min	-312.226	55.454	0.	0.
36	0.83713	SLU 7-NL	NonStatic	Min	-322.208	94.934	0.	0.
36	0.83713	SLU 7-NL	NonStatic	Min	-322.208	94.934	0.	0.
36	1.04642	SLU 7-NL	NonStatic	Min	-327.671	115.81	0.	0.
36	1.2557	SLU 7-NL	NonStatic	Min	-333.45	137.442	0.	0.
36	1.2557	SLU 7-NL	NonStatic	Min	-333.45	137.442	0.	0.
36	1.67427	SLU 7-NL	NonStatic	Min	-345.951	182.977	0.	0.
36	1.67427	SLU 7-NL	NonStatic	Min	-345.951	182.977	0.	0.
36	2.09284	SLU 7-NL	NonStatic	Min	-359.711	231.54	0.	0.
36	0.	SLE-C-NL	NonStatic	Max	-288.681	91.014	0.	0.
36	0.41857	SLE-C-NL	NonStatic	Max	-303.762	131.85	0.	0.
36	0.41857	SLE-C-NL	NonStatic	Max	-303.762	131.85	0.	0.
36	0.83713	SLE-C-NL	NonStatic	Max	-320.208	175.646	0.	0.
36	0.83713	SLE-C-NL	NonStatic	Max	-320.208	175.646	0.	0.
36	1.04642	SLE-C-NL	NonStatic	Max	-328.943	198.654	0.	0.

Table: Element Forces - Frames, Part 1 of 2

Frame	Station	OutputCase	CaseType	StepType	P	V2	V3	T
	m				KN	KN	KN	KN-m
36	1.2557	SLE-C-NL	NonStatic	Max	-338.02	222.403	0.	0.
36	1.2557	SLE-C-NL	NonStatic	Max	-338.02	222.403	0.	0.
36	1.67427	SLE-C-NL	NonStatic	Max	-357.197	272.121	0.	0.
36	1.67427	SLE-C-NL	NonStatic	Max	-357.197	272.121	0.	0.
36	2.09284	SLE-C-NL	NonStatic	Max	-377.74	324.8	0.	0.
36	0.	SLE-C-NL	NonStatic	Min	-288.681	91.014	0.	0.
36	0.41857	SLE-C-NL	NonStatic	Min	-303.762	131.85	0.	0.
36	0.41857	SLE-C-NL	NonStatic	Min	-303.762	131.85	0.	0.
36	0.83713	SLE-C-NL	NonStatic	Min	-320.208	175.646	0.	0.
36	0.83713	SLE-C-NL	NonStatic	Min	-320.208	175.646	0.	0.
36	1.04642	SLE-C-NL	NonStatic	Min	-328.943	198.654	0.	0.
36	1.2557	SLE-C-NL	NonStatic	Min	-338.02	222.403	0.	0.
36	1.2557	SLE-C-NL	NonStatic	Min	-338.02	222.403	0.	0.
36	1.67427	SLE-C-NL	NonStatic	Min	-357.197	272.121	0.	0.
36	1.67427	SLE-C-NL	NonStatic	Min	-357.197	272.121	0.	0.
36	2.09284	SLE-C-NL	NonStatic	Min	-377.74	324.8	0.	0.
36	0.	SLE-F-1-NL	NonStatic	Max	-259.385	99.005	0.	0.
36	0.41857	SLE-F-1-NL	NonStatic	Max	-275.317	137.632	0.	0.
36	0.41857	SLE-F-1-NL	NonStatic	Max	-275.317	137.632	0.	0.
36	0.83713	SLE-F-1-NL	NonStatic	Max	-292.616	179.22	0.	0.
36	0.83713	SLE-F-1-NL	NonStatic	Max	-292.616	179.22	0.	0.
36	1.04642	SLE-F-1-NL	NonStatic	Max	-301.777	201.124	0.	0.
36	1.2557	SLE-F-1-NL	NonStatic	Max	-311.279	223.768	0.	0.
36	1.2557	SLE-F-1-NL	NonStatic	Max	-311.279	223.768	0.	0.
36	1.67427	SLE-F-1-NL	NonStatic	Max	-331.308	271.278	0.	0.
36	1.67427	SLE-F-1-NL	NonStatic	Max	-331.308	271.278	0.	0.
36	2.09284	SLE-F-1-NL	NonStatic	Max	-352.702	321.748	0.	0.
36	0.	SLE-F-1-NL	NonStatic	Min	-259.385	99.005	0.	0.
36	0.41857	SLE-F-1-NL	NonStatic	Min	-275.317	137.632	0.	0.
36	0.41857	SLE-F-1-NL	NonStatic	Min	-275.317	137.632	0.	0.
36	0.83713	SLE-F-1-NL	NonStatic	Min	-292.616	179.22	0.	0.
36	0.83713	SLE-F-1-NL	NonStatic	Min	-292.616	179.22	0.	0.
36	1.04642	SLE-F-1-NL	NonStatic	Min	-301.777	201.124	0.	0.
36	1.2557	SLE-F-1-NL	NonStatic	Min	-311.279	223.768	0.	0.
36	1.2557	SLE-F-1-NL	NonStatic	Min	-311.279	223.768	0.	0.
36	1.67427	SLE-F-1-NL	NonStatic	Min	-331.308	271.278	0.	0.
36	1.67427	SLE-F-1-NL	NonStatic	Min	-331.308	271.278	0.	0.
36	2.09284	SLE-F-1-NL	NonStatic	Min	-352.702	321.748	0.	0.
36	0.	SLE-F-2-NL	NonStatic	Max	-254.839	63.861	0.	0.
36	0.41857	SLE-F-2-NL	NonStatic	Max	-267.757	97.682	0.	0.
36	0.41857	SLE-F-2-NL	NonStatic	Max	-267.757	97.682	0.	0.
36	0.83713	SLE-F-2-NL	NonStatic	Max	-282.04	134.464	0.	0.
36	0.83713	SLE-F-2-NL	NonStatic	Max	-282.04	134.464	0.	0.
36	1.04642	SLE-F-2-NL	NonStatic	Max	-289.694	153.965	0.	0.
36	1.2557	SLE-F-2-NL	NonStatic	Max	-297.689	174.207	0.	0.
36	1.2557	SLE-F-2-NL	NonStatic	Max	-297.689	174.207	0.	0.
36	1.67427	SLE-F-2-NL	NonStatic	Max	-314.703	216.91	0.	0.
36	1.67427	SLE-F-2-NL	NonStatic	Max	-314.703	216.911	0.	0.
36	2.09284	SLE-F-2-NL	NonStatic	Max	-333.082	262.575	0.	0.
36	0.	SLE-F-2-NL	NonStatic	Min	-254.839	63.861	0.	0.
36	0.41857	SLE-F-2-NL	NonStatic	Min	-267.757	97.682	0.	0.
36	0.41857	SLE-F-2-NL	NonStatic	Min	-267.757	97.682	0.	0.
36	0.83713	SLE-F-2-NL	NonStatic	Min	-282.04	134.464	0.	0.
36	0.83713	SLE-F-2-NL	NonStatic	Min	-282.04	134.464	0.	0.

Table: Element Forces - Frames, Part 1 of 2

Frame	Station	OutputCase	CaseType	StepType	P	V2	V3	T
	m				KN	KN	KN	KN-m
36	1.04642	SLE-F-2-NL	NonStatic	Min	-289.694	153.965	0.	0.
36	1.2557	SLE-F-2-NL	NonStatic	Min	-297.689	174.207	0.	0.
36	1.2557	SLE-F-2-NL	NonStatic	Min	-297.689	174.207	0.	0.
36	1.67427	SLE-F-2-NL	NonStatic	Min	-314.703	216.91	0.	0.
36	1.67427	SLE-F-2-NL	NonStatic	Min	-314.703	216.911	0.	0.
36	2.09284	SLE-F-2-NL	NonStatic	Min	-333.082	262.575	0.	0.
36	0.	SLE-F-3-NL	NonStatic	Max	-248.233	60.891	0.	0.
36	0.41857	SLE-F-3-NL	NonStatic	Max	-259.867	95.517	0.	0.
36	0.41857	SLE-F-3-NL	NonStatic	Max	-259.867	95.517	0.	0.
36	0.83713	SLE-F-3-NL	NonStatic	Max	-272.865	133.105	0.	0.
36	0.83713	SLE-F-3-NL	NonStatic	Max	-272.865	133.105	0.	0.
36	1.04642	SLE-F-3-NL	NonStatic	Max	-279.877	153.009	0.	0.
36	1.2557	SLE-F-3-NL	NonStatic	Max	-287.23	173.654	0.	0.
36	1.2557	SLE-F-3-NL	NonStatic	Max	-287.23	173.654	0.	0.
36	1.67427	SLE-F-3-NL	NonStatic	Max	-302.959	217.163	0.	0.
36	1.67427	SLE-F-3-NL	NonStatic	Max	-302.959	217.163	0.	0.
36	2.09284	SLE-F-3-NL	NonStatic	Max	-320.054	263.634	0.	0.
36	0.	SLE-F-3-NL	NonStatic	Min	-248.233	60.891	0.	0.
36	0.41857	SLE-F-3-NL	NonStatic	Min	-259.867	95.517	0.	0.
36	0.41857	SLE-F-3-NL	NonStatic	Min	-259.867	95.517	0.	0.
36	0.83713	SLE-F-3-NL	NonStatic	Min	-272.865	133.105	0.	0.
36	0.83713	SLE-F-3-NL	NonStatic	Min	-272.865	133.105	0.	0.
36	1.04642	SLE-F-3-NL	NonStatic	Min	-279.877	153.009	0.	0.
36	1.2557	SLE-F-3-NL	NonStatic	Min	-287.23	173.654	0.	0.
36	1.2557	SLE-F-3-NL	NonStatic	Min	-287.23	173.654	0.	0.
36	1.67427	SLE-F-3-NL	NonStatic	Min	-302.959	217.163	0.	0.
36	1.67427	SLE-F-3-NL	NonStatic	Min	-302.959	217.163	0.	0.
36	2.09284	SLE-F-3-NL	NonStatic	Min	-320.054	263.634	0.	0.
36	0.	SLE-QP-NL	NonStatic	Max	-236.492	71.814	0.	0.
36	0.41857	SLE-QP-NL	NonStatic	Max	-249.409	105.635	0.	0.
36	0.41857	SLE-QP-NL	NonStatic	Max	-249.409	105.635	0.	0.
36	0.83713	SLE-QP-NL	NonStatic	Max	-263.693	142.417	0.	0.
36	0.83713	SLE-QP-NL	NonStatic	Max	-263.693	142.417	0.	0.
36	1.04642	SLE-QP-NL	NonStatic	Max	-271.346	161.918	0.	0.
36	1.2557	SLE-QP-NL	NonStatic	Max	-279.341	182.16	0.	0.
36	1.2557	SLE-QP-NL	NonStatic	Max	-279.341	182.16	0.	0.
36	1.67427	SLE-QP-NL	NonStatic	Max	-296.355	224.864	0.	0.
36	1.67427	SLE-QP-NL	NonStatic	Max	-296.355	224.864	0.	0.
36	2.09284	SLE-QP-NL	NonStatic	Max	-314.735	270.529	0.	0.
36	0.	SLE-QP-NL	NonStatic	Min	-236.492	71.814	0.	0.
36	0.41857	SLE-QP-NL	NonStatic	Min	-249.409	105.635	0.	0.
36	0.41857	SLE-QP-NL	NonStatic	Min	-249.409	105.635	0.	0.
36	0.83713	SLE-QP-NL	NonStatic	Min	-263.693	142.417	0.	0.
36	0.83713	SLE-QP-NL	NonStatic	Min	-263.693	142.417	0.	0.
36	1.04642	SLE-QP-NL	NonStatic	Min	-271.346	161.918	0.	0.
36	1.2557	SLE-QP-NL	NonStatic	Min	-279.341	182.16	0.	0.
36	1.2557	SLE-QP-NL	NonStatic	Min	-279.341	182.16	0.	0.
36	1.67427	SLE-QP-NL	NonStatic	Min	-296.355	224.864	0.	0.
36	1.67427	SLE-QP-NL	NonStatic	Min	-296.355	224.864	0.	0.
36	2.09284	SLE-QP-NL	NonStatic	Min	-314.735	270.529	0.	0.
36	0.	SLV1-NL	NonStatic	Max	-323.349	40.692	0.	0.
36	0.41857	SLV1-NL	NonStatic	Max	-337.32	75.282	0.	0.
36	0.41857	SLV1-NL	NonStatic	Max	-337.32	75.282	0.	0.
36	0.83713	SLV1-NL	NonStatic	Max	-352.801	112.771	0.	0.

Table: Element Forces - Frames, Part 1 of 2

Frame	Station	OutputCase	CaseType	StepType	P	V2	V3	T
	m				KN	KN	KN	KN-m
36	0.83713	SLV1-NL	NonStatic	Max	-352.801	112.771	0.	0.
36	1.04642	SLV1-NL	NonStatic	Max	-361.108	132.601	0.	0.
36	1.2557	SLV1-NL	NonStatic	Max	-369.792	153.157	0.	0.
36	1.2557	SLV1-NL	NonStatic	Max	-369.792	153.157	0.	0.
36	1.67427	SLV1-NL	NonStatic	Max	-388.295	196.44	0.	0.
36	1.67427	SLV1-NL	NonStatic	Max	-388.295	196.44	0.	0.
36	2.09284	SLV1-NL	NonStatic	Max	-408.307	242.621	0.	0.
36	0.	SLV1-NL	NonStatic	Min	-323.349	40.692	0.	0.
36	0.41857	SLV1-NL	NonStatic	Min	-337.32	75.282	0.	0.
36	0.41857	SLV1-NL	NonStatic	Min	-337.32	75.282	0.	0.
36	0.83713	SLV1-NL	NonStatic	Min	-352.801	112.771	0.	0.
36	0.83713	SLV1-NL	NonStatic	Min	-352.801	112.771	0.	0.
36	1.04642	SLV1-NL	NonStatic	Min	-361.108	132.601	0.	0.
36	1.2557	SLV1-NL	NonStatic	Min	-369.792	153.157	0.	0.
36	1.2557	SLV1-NL	NonStatic	Min	-369.792	153.157	0.	0.
36	1.67427	SLV1-NL	NonStatic	Min	-388.295	196.44	0.	0.
36	1.67427	SLV1-NL	NonStatic	Min	-388.295	196.44	0.	0.
36	2.09284	SLV1-NL	NonStatic	Min	-408.307	242.621	0.	0.
36	0.	SLV2-NL	NonStatic	Max	-238.995	64.357	0.	0.
36	0.41857	SLV2-NL	NonStatic	Max	-251.506	99.864	0.	0.
36	0.41857	SLV2-NL	NonStatic	Max	-251.506	99.864	0.	0.
36	0.83713	SLV2-NL	NonStatic	Max	-265.262	138.434	0.	0.
36	0.83713	SLV2-NL	NonStatic	Max	-265.262	138.434	0.	0.
36	1.04642	SLV2-NL	NonStatic	Max	-272.606	158.869	0.	0.
36	1.2557	SLV2-NL	NonStatic	Max	-280.263	180.069	0.	0.
36	1.2557	SLV2-NL	NonStatic	Max	-280.263	180.069	0.	0.
36	1.67427	SLV2-NL	NonStatic	Max	-296.509	224.768	0.	0.
36	1.67427	SLV2-NL	NonStatic	Max	-296.509	224.768	0.	0.
36	2.09284	SLV2-NL	NonStatic	Max	-314.	272.531	0.	0.
36	0.	SLV2-NL	NonStatic	Min	-238.995	64.357	0.	0.
36	0.41857	SLV2-NL	NonStatic	Min	-251.506	99.864	0.	0.
36	0.41857	SLV2-NL	NonStatic	Min	-251.506	99.864	0.	0.
36	0.83713	SLV2-NL	NonStatic	Min	-265.262	138.434	0.	0.
36	0.83713	SLV2-NL	NonStatic	Min	-265.262	138.434	0.	0.
36	1.04642	SLV2-NL	NonStatic	Min	-272.606	158.869	0.	0.
36	1.2557	SLV2-NL	NonStatic	Min	-280.263	180.069	0.	0.
36	1.2557	SLV2-NL	NonStatic	Min	-280.263	180.069	0.	0.
36	1.67427	SLV2-NL	NonStatic	Min	-296.509	224.768	0.	0.
36	1.67427	SLV2-NL	NonStatic	Min	-296.509	224.768	0.	0.
36	2.09284	SLV2-NL	NonStatic	Min	-314.	272.531	0.	0.
36	0.	SLV3-NL	NonStatic	Max	-325.933	42.466	0.	0.
36	0.41857	SLV3-NL	NonStatic	Max	-340.124	77.407	0.	0.
36	0.41857	SLV3-NL	NonStatic	Max	-340.124	77.408	0.	0.
36	0.83713	SLV3-NL	NonStatic	Max	-355.8	115.206	0.	0.
36	0.83713	SLV3-NL	NonStatic	Max	-355.8	115.206	0.	0.
36	1.04642	SLV3-NL	NonStatic	Max	-364.195	135.178	0.	0.
36	1.2557	SLV3-NL	NonStatic	Max	-372.961	155.863	0.	0.
36	1.2557	SLV3-NL	NonStatic	Max	-372.961	155.863	0.	0.
36	1.67427	SLV3-NL	NonStatic	Max	-391.608	199.378	0.	0.
36	1.67427	SLV3-NL	NonStatic	Max	-391.608	199.378	0.	0.
36	2.09284	SLV3-NL	NonStatic	Max	-411.741	245.75	0.	0.
36	0.	SLV3-NL	NonStatic	Min	-325.933	42.466	0.	0.
36	0.41857	SLV3-NL	NonStatic	Min	-340.124	77.407	0.	0.
36	0.41857	SLV3-NL	NonStatic	Min	-340.124	77.408	0.	0.

Table: Element Forces - Frames, Part 1 of 2

Frame	Station	OutputCase	CaseType	StepType	P	V2	V3	T
	m				KN	KN	KN	KN-m
36	0.83713	SLV3-NL	NonStatic	Min	-355.8	115.206	0.	0.
36	0.83713	SLV3-NL	NonStatic	Min	-355.8	115.206	0.	0.
36	1.04642	SLV3-NL	NonStatic	Min	-364.195	135.178	0.	0.
36	1.2557	SLV3-NL	NonStatic	Min	-372.961	155.863	0.	0.
36	1.2557	SLV3-NL	NonStatic	Min	-372.961	155.863	0.	0.
36	1.67427	SLV3-NL	NonStatic	Min	-391.608	199.378	0.	0.
36	1.67427	SLV3-NL	NonStatic	Min	-391.608	199.378	0.	0.
36	2.09284	SLV3-NL	NonStatic	Min	-411.741	245.75	0.	0.
36	0.	SLV4-NL	NonStatic	Max	-241.581	66.135	0.	0.
36	0.41857	SLV4-NL	NonStatic	Max	-254.312	101.992	0.	0.
36	0.41857	SLV4-NL	NonStatic	Max	-254.312	101.992	0.	0.
36	0.83713	SLV4-NL	NonStatic	Max	-268.262	140.873	0.	0.
36	0.83713	SLV4-NL	NonStatic	Max	-268.262	140.873	0.	0.
36	1.04642	SLV4-NL	NonStatic	Max	-275.695	161.448	0.	0.
36	1.2557	SLV4-NL	NonStatic	Max	-283.433	182.779	0.	0.
36	1.2557	SLV4-NL	NonStatic	Max	-283.433	182.779	0.	0.
36	1.67427	SLV4-NL	NonStatic	Max	-299.824	227.709	0.	0.
36	1.67427	SLV4-NL	NonStatic	Max	-299.824	227.708	0.	0.
36	2.09284	SLV4-NL	NonStatic	Max	-317.436	275.663	0.	0.
36	0.	SLV4-NL	NonStatic	Min	-241.581	66.135	0.	0.
36	0.41857	SLV4-NL	NonStatic	Min	-254.312	101.992	0.	0.
36	0.41857	SLV4-NL	NonStatic	Min	-254.312	101.992	0.	0.
36	0.83713	SLV4-NL	NonStatic	Min	-268.262	140.873	0.	0.
36	0.83713	SLV4-NL	NonStatic	Min	-268.262	140.873	0.	0.
36	1.04642	SLV4-NL	NonStatic	Min	-275.695	161.448	0.	0.
36	1.2557	SLV4-NL	NonStatic	Min	-283.433	182.779	0.	0.
36	1.2557	SLV4-NL	NonStatic	Min	-283.433	182.779	0.	0.
36	1.67427	SLV4-NL	NonStatic	Min	-299.824	227.709	0.	0.
36	1.67427	SLV4-NL	NonStatic	Min	-299.824	227.708	0.	0.
36	2.09284	SLV4-NL	NonStatic	Min	-317.436	275.663	0.	0.
36	0.	SLV5-NL	NonStatic	Max	-262.863	64.272	0.	0.
36	0.41857	SLV5-NL	NonStatic	Max	-276.066	98.774	0.	0.
36	0.41857	SLV5-NL	NonStatic	Max	-276.066	98.774	0.	0.
36	0.83713	SLV5-NL	NonStatic	Max	-290.716	136.279	0.	0.
36	0.83713	SLV5-NL	NonStatic	Max	-290.716	136.279	0.	0.
36	1.04642	SLV5-NL	NonStatic	Max	-298.583	156.157	0.	0.
36	1.2557	SLV5-NL	NonStatic	Max	-306.813	176.786	0.	0.
36	1.2557	SLV5-NL	NonStatic	Max	-306.813	176.786	0.	0.
36	1.67427	SLV5-NL	NonStatic	Max	-324.356	220.295	0.	0.
36	1.67427	SLV5-NL	NonStatic	Max	-324.356	220.295	0.	0.
36	2.09284	SLV5-NL	NonStatic	Max	-343.346	266.807	0.	0.
36	0.	SLV5-NL	NonStatic	Min	-262.863	64.272	0.	0.
36	0.41857	SLV5-NL	NonStatic	Min	-276.066	98.774	0.	0.
36	0.41857	SLV5-NL	NonStatic	Min	-276.066	98.774	0.	0.
36	0.83713	SLV5-NL	NonStatic	Min	-290.716	136.279	0.	0.
36	0.83713	SLV5-NL	NonStatic	Min	-290.716	136.279	0.	0.
36	1.04642	SLV5-NL	NonStatic	Min	-298.583	156.157	0.	0.
36	1.2557	SLV5-NL	NonStatic	Min	-306.813	176.786	0.	0.
36	1.2557	SLV5-NL	NonStatic	Min	-306.813	176.786	0.	0.
36	1.67427	SLV5-NL	NonStatic	Min	-324.356	220.295	0.	0.
36	1.67427	SLV5-NL	NonStatic	Min	-324.356	220.295	0.	0.
36	2.09284	SLV5-NL	NonStatic	Min	-343.346	266.807	0.	0.
36	0.	SLV6-NL	NonStatic	Max	-237.67	71.551	0.	0.
36	0.41857	SLV6-NL	NonStatic	Max	-250.435	106.328	0.	0.

Table: Element Forces - Frames, Part 1 of 2

Frame	Station	OutputCase	CaseType	StepType	P	V2	V3	T
	m				KN	KN	KN	KN-m
36	0.41857	SLV6-NL	NonStatic	Max	-250.435	106.328	0.	0.
36	0.83713	SLV6-NL	NonStatic	Max	-264.567	144.157	0.	0.
36	0.83713	SLV6-NL	NonStatic	Max	-264.567	144.157	0.	0.
36	1.04642	SLV6-NL	NonStatic	Max	-272.146	164.217	0.	0.
36	1.2557	SLV6-NL	NonStatic	Max	-280.067	185.039	0.	0.
36	1.2557	SLV6-NL	NonStatic	Max	-280.067	185.039	0.	0.
36	1.67427	SLV6-NL	NonStatic	Max	-296.933	228.973	0.	0.
36	1.67427	SLV6-NL	NonStatic	Max	-296.933	228.973	0.	0.
36	2.09284	SLV6-NL	NonStatic	Max	-315.167	275.959	0.	0.
36	0.	SLV6-NL	NonStatic	Min	-237.67	71.551	0.	0.
36	0.41857	SLV6-NL	NonStatic	Min	-250.435	106.328	0.	0.
36	0.41857	SLV6-NL	NonStatic	Min	-250.435	106.328	0.	0.
36	0.83713	SLV6-NL	NonStatic	Min	-264.567	144.157	0.	0.
36	0.83713	SLV6-NL	NonStatic	Min	-264.567	144.157	0.	0.
36	1.04642	SLV6-NL	NonStatic	Min	-272.146	164.217	0.	0.
36	1.2557	SLV6-NL	NonStatic	Min	-280.067	185.039	0.	0.
36	1.2557	SLV6-NL	NonStatic	Min	-280.067	185.039	0.	0.
36	1.67427	SLV6-NL	NonStatic	Min	-296.933	228.973	0.	0.
36	1.67427	SLV6-NL	NonStatic	Min	-296.933	228.973	0.	0.
36	2.09284	SLV6-NL	NonStatic	Min	-315.167	275.959	0.	0.
36	0.	SLV7-NL	NonStatic	Max	-271.477	70.183	0.	0.
36	0.41857	SLV7-NL	NonStatic	Max	-285.413	105.854	0.	0.
36	0.41857	SLV7-NL	NonStatic	Max	-285.413	105.854	0.	0.
36	0.83713	SLV7-NL	NonStatic	Max	-300.712	144.394	0.	0.
36	0.83713	SLV7-NL	NonStatic	Max	-300.712	144.394	0.	0.
36	1.04642	SLV7-NL	NonStatic	Max	-308.873	164.74	0.	0.
36	1.2557	SLV7-NL	NonStatic	Max	-317.375	185.804	0.	0.
36	1.2557	SLV7-NL	NonStatic	Max	-317.375	185.804	0.	0.
36	1.67427	SLV7-NL	NonStatic	Max	-335.402	230.083	0.	0.
36	1.67427	SLV7-NL	NonStatic	Max	-335.402	230.083	0.	0.
36	2.09284	SLV7-NL	NonStatic	Max	-354.792	277.232	0.	0.
36	0.	SLV7-NL	NonStatic	Min	-271.477	70.183	0.	0.
36	0.41857	SLV7-NL	NonStatic	Min	-285.413	105.854	0.	0.
36	0.41857	SLV7-NL	NonStatic	Min	-285.413	105.854	0.	0.
36	0.83713	SLV7-NL	NonStatic	Min	-300.712	144.394	0.	0.
36	0.83713	SLV7-NL	NonStatic	Min	-300.712	144.394	0.	0.
36	1.04642	SLV7-NL	NonStatic	Min	-308.873	164.74	0.	0.
36	1.2557	SLV7-NL	NonStatic	Min	-317.375	185.804	0.	0.
36	1.2557	SLV7-NL	NonStatic	Min	-317.375	185.804	0.	0.
36	1.67427	SLV7-NL	NonStatic	Min	-335.402	230.083	0.	0.
36	1.67427	SLV7-NL	NonStatic	Min	-335.402	230.083	0.	0.
36	2.09284	SLV7-NL	NonStatic	Min	-354.792	277.232	0.	0.
36	0.	SLV8-NL	NonStatic	Max	-246.294	77.478	0.	0.
36	0.41857	SLV8-NL	NonStatic	Max	-259.792	113.424	0.	0.
36	0.41857	SLV8-NL	NonStatic	Max	-259.792	113.424	0.	0.
36	0.83713	SLV8-NL	NonStatic	Max	-274.574	152.289	0.	0.
36	0.83713	SLV8-NL	NonStatic	Max	-274.574	152.289	0.	0.
36	1.04642	SLV8-NL	NonStatic	Max	-282.446	172.816	0.	0.
36	1.2557	SLV8-NL	NonStatic	Max	-290.64	194.073	0.	0.
36	1.2557	SLV8-NL	NonStatic	Max	-290.64	194.073	0.	0.
36	1.67427	SLV8-NL	NonStatic	Max	-307.99	238.777	0.	0.
36	1.67427	SLV8-NL	NonStatic	Max	-307.99	238.777	0.	0.
36	2.09284	SLV8-NL	NonStatic	Max	-326.623	286.401	0.	0.
36	0.	SLV8-NL	NonStatic	Min	-246.294	77.478	0.	0.

Table: Element Forces - Frames, Part 1 of 2

Frame	Station	OutputCase	CaseType	StepType	P	V2	V3	T
	m				KN	KN	KN	KN-m
36	0.41857	SLV8-NL	NonStatic	Min	-259.792	113.424	0.	0.
36	0.41857	SLV8-NL	NonStatic	Min	-259.792	113.424	0.	0.
36	0.83713	SLV8-NL	NonStatic	Min	-274.574	152.289	0.	0.
36	0.83713	SLV8-NL	NonStatic	Min	-274.574	152.289	0.	0.
36	1.04642	SLV8-NL	NonStatic	Min	-282.446	172.816	0.	0.
36	1.2557	SLV8-NL	NonStatic	Min	-290.64	194.073	0.	0.
36	1.2557	SLV8-NL	NonStatic	Min	-290.64	194.073	0.	0.
36	1.67427	SLV8-NL	NonStatic	Min	-307.99	238.777	0.	0.
36	1.67427	SLV8-NL	NonStatic	Min	-307.99	238.777	0.	0.
36	2.09284	SLV8-NL	NonStatic	Min	-326.623	286.401	0.	0.
36	0.	SLV9-NL	NonStatic	Max	-286.196	52.002	0.	0.
36	0.41857	SLV9-NL	NonStatic	Max	-298.569	87.29	0.	0.
36	0.41857	SLV9-NL	NonStatic	Max	-298.569	87.29	0.	0.
36	0.83713	SLV9-NL	NonStatic	Max	-312.163	125.602	0.	0.
36	0.83713	SLV9-NL	NonStatic	Max	-312.163	125.602	0.	0.
36	1.04642	SLV9-NL	NonStatic	Max	-319.417	145.892	0.	0.
36	1.2557	SLV9-NL	NonStatic	Max	-326.976	166.938	0.	0.
36	1.2557	SLV9-NL	NonStatic	Max	-326.976	166.938	0.	0.
36	1.67427	SLV9-NL	NonStatic	Max	-343.01	211.298	0.	0.
36	1.67427	SLV9-NL	NonStatic	Max	-343.01	211.298	0.	0.
36	2.09284	SLV9-NL	NonStatic	Max	-360.264	258.683	0.	0.
36	0.	SLV9-NL	NonStatic	Min	-286.196	52.002	0.	0.
36	0.41857	SLV9-NL	NonStatic	Min	-298.569	87.29	0.	0.
36	0.41857	SLV9-NL	NonStatic	Min	-298.569	87.29	0.	0.
36	0.83713	SLV9-NL	NonStatic	Min	-312.163	125.602	0.	0.
36	0.83713	SLV9-NL	NonStatic	Min	-312.163	125.602	0.	0.
36	1.04642	SLV9-NL	NonStatic	Min	-319.417	145.892	0.	0.
36	1.2557	SLV9-NL	NonStatic	Min	-326.976	166.938	0.	0.
36	1.2557	SLV9-NL	NonStatic	Min	-326.976	166.938	0.	0.
36	1.67427	SLV9-NL	NonStatic	Min	-343.01	211.298	0.	0.
36	1.67427	SLV9-NL	NonStatic	Min	-343.01	211.298	0.	0.
36	2.09284	SLV9-NL	NonStatic	Min	-360.264	258.683	0.	0.
36	0.	SLV10-NL	NonStatic	Max	-225.871	81.532	0.	0.
36	0.41857	SLV10-NL	NonStatic	Max	-239.704	115.904	0.	0.
36	0.41857	SLV10-NL	NonStatic	Max	-239.704	115.904	0.	0.
36	0.83713	SLV10-NL	NonStatic	Max	-255.023	153.133	0.	0.
36	0.83713	SLV10-NL	NonStatic	Max	-255.023	153.133	0.	0.
36	1.04642	SLV10-NL	NonStatic	Max	-263.239	172.82	0.	0.
36	1.2557	SLV10-NL	NonStatic	Max	-271.827	193.221	0.	0.
36	1.2557	SLV10-NL	NonStatic	Max	-271.827	193.22	0.	0.
36	1.67427	SLV10-NL	NonStatic	Max	-290.117	236.166	0.	0.
36	1.67427	SLV10-NL	NonStatic	Max	-290.117	236.166	0.	0.
36	2.09284	SLV10-NL	NonStatic	Max	-309.893	281.968	0.	0.
36	0.	SLV10-NL	NonStatic	Min	-225.871	81.532	0.	0.
36	0.41857	SLV10-NL	NonStatic	Min	-239.704	115.904	0.	0.
36	0.41857	SLV10-NL	NonStatic	Min	-239.704	115.904	0.	0.
36	0.83713	SLV10-NL	NonStatic	Min	-255.023	153.133	0.	0.
36	0.83713	SLV10-NL	NonStatic	Min	-255.023	153.133	0.	0.
36	1.04642	SLV10-NL	NonStatic	Min	-263.239	172.82	0.	0.
36	1.2557	SLV10-NL	NonStatic	Min	-271.827	193.221	0.	0.
36	1.2557	SLV10-NL	NonStatic	Min	-271.827	193.22	0.	0.
36	1.67427	SLV10-NL	NonStatic	Min	-290.117	236.166	0.	0.
36	1.67427	SLV10-NL	NonStatic	Min	-290.117	236.166	0.	0.
36	2.09284	SLV10-NL	NonStatic	Min	-309.893	281.968	0.	0.

Table: Element Forces - Frames, Part 1 of 2

Frame	Station	OutputCase	CaseType	StepType	P	V2	V3	T
	m				KN	KN	KN	KN-m
36	0.	SLV11-NL	NonStatic	Max	-288.702	56.867	0.	0.
36	0.41857	SLV11-NL	NonStatic	Max	-301.57	92.943	0.	0.
36	0.41857	SLV11-NL	NonStatic	Max	-301.57	92.943	0.	0.
36	0.83713	SLV11-NL	NonStatic	Max	-315.683	132.083	0.	0.
36	0.83713	SLV11-NL	NonStatic	Max	-315.683	132.083	0.	0.
36	1.04642	SLV11-NL	NonStatic	Max	-323.207	152.802	0.	0.
36	1.2557	SLV11-NL	NonStatic	Max	-331.041	174.287	0.	0.
36	1.2557	SLV11-NL	NonStatic	Max	-331.041	174.288	0.	0.
36	1.67427	SLV11-NL	NonStatic	Max	-347.645	219.556	0.	0.
36	1.67427	SLV11-NL	NonStatic	Max	-347.645	219.556	0.	0.
36	2.09284	SLV11-NL	NonStatic	Max	-365.493	267.888	0.	0.
36	0.	SLV11-NL	NonStatic	Min	-288.702	56.867	0.	0.
36	0.41857	SLV11-NL	NonStatic	Min	-301.57	92.943	0.	0.
36	0.41857	SLV11-NL	NonStatic	Min	-301.57	92.943	0.	0.
36	0.83713	SLV11-NL	NonStatic	Min	-315.683	132.083	0.	0.
36	0.83713	SLV11-NL	NonStatic	Min	-315.683	132.083	0.	0.
36	1.04642	SLV11-NL	NonStatic	Min	-323.207	152.802	0.	0.
36	1.2557	SLV11-NL	NonStatic	Min	-331.041	174.287	0.	0.
36	1.2557	SLV11-NL	NonStatic	Min	-331.041	174.288	0.	0.
36	1.67427	SLV11-NL	NonStatic	Min	-347.645	219.556	0.	0.
36	1.67427	SLV11-NL	NonStatic	Min	-347.645	219.556	0.	0.
36	2.09284	SLV11-NL	NonStatic	Min	-365.493	267.888	0.	0.
36	0.	SLV12-NL	NonStatic	Max	-228.389	86.416	0.	0.
36	0.41857	SLV12-NL	NonStatic	Max	-242.717	121.576	0.	0.
36	0.41857	SLV12-NL	NonStatic	Max	-242.717	121.576	0.	0.
36	0.83713	SLV12-NL	NonStatic	Max	-258.555	159.634	0.	0.
36	0.83713	SLV12-NL	NonStatic	Max	-258.555	159.634	0.	0.
36	1.04642	SLV12-NL	NonStatic	Max	-267.041	179.749	0.	0.
36	1.2557	SLV12-NL	NonStatic	Max	-275.904	200.589	0.	0.
36	1.2557	SLV12-NL	NonStatic	Max	-275.904	200.589	0.	0.
36	1.67427	SLV12-NL	NonStatic	Max	-294.764	244.442	0.	0.
36	1.67427	SLV12-NL	NonStatic	Max	-294.764	244.442	0.	0.
36	2.09284	SLV12-NL	NonStatic	Max	-315.134	291.192	0.	0.
36	0.	SLV12-NL	NonStatic	Min	-228.389	86.416	0.	0.
36	0.41857	SLV12-NL	NonStatic	Min	-242.717	121.576	0.	0.
36	0.41857	SLV12-NL	NonStatic	Min	-242.717	121.576	0.	0.
36	0.83713	SLV12-NL	NonStatic	Min	-258.555	159.634	0.	0.
36	0.83713	SLV12-NL	NonStatic	Min	-258.555	159.634	0.	0.
36	1.04642	SLV12-NL	NonStatic	Min	-267.041	179.749	0.	0.
36	1.2557	SLV12-NL	NonStatic	Min	-275.904	200.589	0.	0.
36	1.2557	SLV12-NL	NonStatic	Min	-275.904	200.589	0.	0.
36	1.67427	SLV12-NL	NonStatic	Min	-294.764	244.442	0.	0.
36	1.67427	SLV12-NL	NonStatic	Min	-294.764	244.442	0.	0.
36	2.09284	SLV12-NL	NonStatic	Min	-315.134	291.192	0.	0.
36	0.	SLV13-NL	NonStatic	Max	-251.839	62.974	0.	0.
36	0.41857	SLV13-NL	NonStatic	Max	-264.146	97.021	0.	0.
36	0.41857	SLV13-NL	NonStatic	Max	-264.146	97.021	0.	0.
36	0.83713	SLV13-NL	NonStatic	Max	-277.737	133.988	0.	0.
36	0.83713	SLV13-NL	NonStatic	Max	-277.737	133.988	0.	0.
36	1.04642	SLV13-NL	NonStatic	Max	-285.014	153.566	0.	0.
36	1.2557	SLV13-NL	NonStatic	Max	-292.612	173.874	0.	0.
36	1.2557	SLV13-NL	NonStatic	Max	-292.612	173.874	0.	0.
36	1.67427	SLV13-NL	NonStatic	Max	-308.771	216.68	0.	0.
36	1.67427	SLV13-NL	NonStatic	Max	-308.771	216.68	0.	0.

Table: Element Forces - Frames, Part 1 of 2

Frame	Station	OutputCase	CaseType	StepType	P	V2	V3	T
	m				KN	KN	KN	KN-m
36	2.09284	SLV13-NL	NonStatic	Max	-326.214	262.406	0.	0.
36	0.	SLV13-NL	NonStatic	Min	-251.839	62.974	0.	0.
36	0.41857	SLV13-NL	NonStatic	Min	-264.146	97.021	0.	0.
36	0.41857	SLV13-NL	NonStatic	Min	-264.146	97.021	0.	0.
36	0.83713	SLV13-NL	NonStatic	Min	-277.737	133.988	0.	0.
36	0.83713	SLV13-NL	NonStatic	Min	-277.737	133.988	0.	0.
36	1.04642	SLV13-NL	NonStatic	Min	-285.014	153.566	0.	0.
36	1.2557	SLV13-NL	NonStatic	Min	-292.612	173.874	0.	0.
36	1.2557	SLV13-NL	NonStatic	Min	-292.612	173.874	0.	0.
36	1.67427	SLV13-NL	NonStatic	Min	-308.771	216.68	0.	0.
36	1.67427	SLV13-NL	NonStatic	Min	-308.771	216.68	0.	0.
36	2.09284	SLV13-NL	NonStatic	Min	-326.214	262.406	0.	0.
36	0.	SLV14-NL	NonStatic	Max	-234.093	71.863	0.	0.
36	0.41857	SLV14-NL	NonStatic	Max	-246.838	105.636	0.	0.
36	0.41857	SLV14-NL	NonStatic	Max	-246.838	105.636	0.	0.
36	0.83713	SLV14-NL	NonStatic	Max	-260.947	142.278	0.	0.
36	0.83713	SLV14-NL	NonStatic	Max	-260.947	142.278	0.	0.
36	1.04642	SLV14-NL	NonStatic	Max	-268.512	161.675	0.	0.
36	1.2557	SLV14-NL	NonStatic	Max	-276.419	181.789	0.	0.
36	1.2557	SLV14-NL	NonStatic	Max	-276.419	181.789	0.	0.
36	1.67427	SLV14-NL	NonStatic	Max	-293.255	224.171	0.	0.
36	1.67427	SLV14-NL	NonStatic	Max	-293.255	224.171	0.	0.
36	2.09284	SLV14-NL	NonStatic	Max	-311.454	269.421	0.	0.
36	0.	SLV14-NL	NonStatic	Min	-234.093	71.863	0.	0.
36	0.41857	SLV14-NL	NonStatic	Min	-246.838	105.636	0.	0.
36	0.41857	SLV14-NL	NonStatic	Min	-246.838	105.636	0.	0.
36	0.83713	SLV14-NL	NonStatic	Min	-260.947	142.278	0.	0.
36	0.83713	SLV14-NL	NonStatic	Min	-260.947	142.278	0.	0.
36	1.04642	SLV14-NL	NonStatic	Min	-268.512	161.675	0.	0.
36	1.2557	SLV14-NL	NonStatic	Min	-276.419	181.789	0.	0.
36	1.2557	SLV14-NL	NonStatic	Min	-276.419	181.789	0.	0.
36	1.67427	SLV14-NL	NonStatic	Min	-293.255	224.171	0.	0.
36	1.67427	SLV14-NL	NonStatic	Min	-293.255	224.171	0.	0.
36	2.09284	SLV14-NL	NonStatic	Min	-311.454	269.421	0.	0.
36	0.	SLV15-NL	NonStatic	Max	-260.651	78.855	0.	0.
36	0.41857	SLV15-NL	NonStatic	Max	-274.607	115.53	0.	0.
36	0.41857	SLV15-NL	NonStatic	Max	-274.607	115.53	0.	0.
36	0.83713	SLV15-NL	NonStatic	Max	-289.93	155.257	0.	0.
36	0.83713	SLV15-NL	NonStatic	Max	-289.93	155.257	0.	0.
36	1.04642	SLV15-NL	NonStatic	Max	-298.104	176.266	0.	0.
36	1.2557	SLV15-NL	NonStatic	Max	-306.62	198.037	0.	0.
36	1.2557	SLV15-NL	NonStatic	Max	-306.62	198.037	0.	0.
36	1.67427	SLV15-NL	NonStatic	Max	-324.678	243.869	0.	0.
36	1.67427	SLV15-NL	NonStatic	Max	-324.678	243.869	0.	0.
36	2.09284	SLV15-NL	NonStatic	Max	-344.102	292.754	0.	0.
36	0.	SLV15-NL	NonStatic	Min	-260.651	78.855	0.	0.
36	0.41857	SLV15-NL	NonStatic	Min	-274.607	115.53	0.	0.
36	0.41857	SLV15-NL	NonStatic	Min	-274.607	115.53	0.	0.
36	0.83713	SLV15-NL	NonStatic	Min	-289.93	155.257	0.	0.
36	0.83713	SLV15-NL	NonStatic	Min	-289.93	155.257	0.	0.
36	1.04642	SLV15-NL	NonStatic	Min	-298.104	176.266	0.	0.
36	1.2557	SLV15-NL	NonStatic	Min	-306.62	198.037	0.	0.
36	1.2557	SLV15-NL	NonStatic	Min	-306.62	198.037	0.	0.
36	1.67427	SLV15-NL	NonStatic	Min	-324.678	243.869	0.	0.

Table: Element Forces - Frames, Part 1 of 2

Frame	Station	OutputCase	CaseType	StepType	P	V2	V3	T
	m				KN	KN	KN	KN-m
36	1.67427	SLV15-NL	NonStatic	Min	-324.678	243.869	0.	0.
36	2.09284	SLV15-NL	NonStatic	Min	-344.102	292.754	0.	0.
36	0.	SLV16-NL	NonStatic	Max	-243.156	87.758	0.	0.
36	0.41857	SLV16-NL	NonStatic	Max	-257.55	124.158	0.	0.
36	0.41857	SLV16-NL	NonStatic	Max	-257.55	124.158	0.	0.
36	0.83713	SLV16-NL	NonStatic	Max	-273.391	163.561	0.	0.
36	0.83713	SLV16-NL	NonStatic	Max	-273.391	163.561	0.	0.
36	1.04642	SLV16-NL	NonStatic	Max	-281.854	184.389	0.	0.
36	1.2557	SLV16-NL	NonStatic	Max	-290.678	205.966	0.	0.
36	1.2557	SLV16-NL	NonStatic	Max	-290.678	205.966	0.	0.
36	1.67427	SLV16-NL	NonStatic	Max	-309.413	251.374	0.	0.
36	1.67427	SLV16-NL	NonStatic	Max	-309.413	251.374	0.	0.
36	2.09284	SLV16-NL	NonStatic	Max	-329.594	299.784	0.	0.
36	0.	SLV16-NL	NonStatic	Min	-243.156	87.758	0.	0.
36	0.41857	SLV16-NL	NonStatic	Min	-257.55	124.158	0.	0.
36	0.41857	SLV16-NL	NonStatic	Min	-257.55	124.158	0.	0.
36	0.83713	SLV16-NL	NonStatic	Min	-273.391	163.561	0.	0.
36	0.83713	SLV16-NL	NonStatic	Min	-273.391	163.561	0.	0.
36	1.04642	SLV16-NL	NonStatic	Min	-281.854	184.389	0.	0.
36	1.2557	SLV16-NL	NonStatic	Min	-290.678	205.966	0.	0.
36	1.2557	SLV16-NL	NonStatic	Min	-290.678	205.966	0.	0.
36	1.67427	SLV16-NL	NonStatic	Min	-309.413	251.374	0.	0.
36	1.67427	SLV16-NL	NonStatic	Min	-309.413	251.374	0.	0.
36	2.09284	SLV16-NL	NonStatic	Min	-329.594	299.784	0.	0.
41	0.	SLU 1-NL	NonStatic	Max	-881.664	-409.289	0.	0.
41	0.43006	SLU 1-NL	NonStatic	Max	-859.907	-353.356	0.	0.
41	0.43006	SLU 1-NL	NonStatic	Max	-859.907	-352.671	0.	0.
41	0.86012	SLU 1-NL	NonStatic	Max	-839.347	-298.734	0.	0.
41	0.86012	SLU 1-NL	NonStatic	Max	-839.347	-297.742	0.	0.
41	1.29018	SLU 1-NL	NonStatic	Max	-819.985	-245.803	0.	0.
41	1.29018	SLU 1-NL	NonStatic	Max	-819.985	-244.554	0.	0.
41	1.50521	SLU 1-NL	NonStatic	Max	-810.753	-219.333	0.	0.
41	1.72024	SLU 1-NL	NonStatic	Max	-801.82	-194.611	0.	0.
41	1.72024	SLU 1-NL	NonStatic	Max	-801.82	-193.153	0.	0.
41	2.1503	SLU 1-NL	NonStatic	Max	-784.853	-145.207	0.	0.
41	2.1503	SLU 1-NL	NonStatic	Max	-784.853	-143.59	0.	0.
41	2.58036	SLU 1-NL	NonStatic	Max	-769.084	-97.64	0.	0.
41	2.58036	SLU 1-NL	NonStatic	Max	-769.084	-95.914	0.	0.
41	3.01042	SLU 1-NL	NonStatic	Max	-754.512	-51.961	0.	0.
41	0.	SLU 1-NL	NonStatic	Min	-881.664	-409.289	0.	0.
41	0.43006	SLU 1-NL	NonStatic	Min	-859.907	-353.356	0.	0.
41	0.43006	SLU 1-NL	NonStatic	Min	-859.907	-352.671	0.	0.
41	0.86012	SLU 1-NL	NonStatic	Min	-839.347	-298.734	0.	0.
41	0.86012	SLU 1-NL	NonStatic	Min	-839.347	-297.742	0.	0.
41	1.29018	SLU 1-NL	NonStatic	Min	-819.985	-245.803	0.	0.
41	1.29018	SLU 1-NL	NonStatic	Min	-819.985	-244.554	0.	0.
41	1.50521	SLU 1-NL	NonStatic	Min	-810.753	-219.333	0.	0.
41	1.72024	SLU 1-NL	NonStatic	Min	-801.82	-194.611	0.	0.
41	1.72024	SLU 1-NL	NonStatic	Min	-801.82	-193.153	0.	0.
41	2.1503	SLU 1-NL	NonStatic	Min	-784.853	-145.207	0.	0.
41	2.1503	SLU 1-NL	NonStatic	Min	-784.853	-143.59	0.	0.
41	2.58036	SLU 1-NL	NonStatic	Min	-769.084	-97.64	0.	0.
41	2.58036	SLU 1-NL	NonStatic	Min	-769.084	-95.914	0.	0.
41	3.01042	SLU 1-NL	NonStatic	Min	-754.512	-51.961	0.	0.

Table: Element Forces - Frames, Part 1 of 2

Frame	Station	OutputCase	CaseType	StepType	P	V2	V3	T
	m				KN	KN	KN	KN-m
41	0.	SLU 2-NL	NonStatic	Max	-881.664	-291.523	0.	0.
41	0.43006	SLU 2-NL	NonStatic	Max	-859.907	-252.726	0.	0.
41	0.43006	SLU 2-NL	NonStatic	Max	-859.907	-251.75	0.	0.
41	0.86012	SLU 2-NL	NonStatic	Max	-839.347	-214.489	0.	0.
41	0.86012	SLU 2-NL	NonStatic	Max	-839.347	-213.087	0.	0.
41	1.29018	SLU 2-NL	NonStatic	Max	-819.985	-177.361	0.	0.
41	1.29018	SLU 2-NL	NonStatic	Max	-819.985	-175.588	0.	0.
41	1.50521	SLU 2-NL	NonStatic	Max	-810.753	-158.301	0.	0.
41	1.72024	SLU 2-NL	NonStatic	Max	-801.82	-141.398	0.	0.
41	1.72024	SLU 2-NL	NonStatic	Max	-801.82	-139.312	0.	0.
41	2.1503	SLU 2-NL	NonStatic	Max	-784.853	-106.658	0.	0.
41	2.1503	SLU 2-NL	NonStatic	Max	-784.853	-104.323	0.	0.
41	2.58036	SLU 2-NL	NonStatic	Max	-769.084	-73.205	0.	0.
41	2.58036	SLU 2-NL	NonStatic	Max	-769.084	-70.693	0.	0.
41	3.01042	SLU 2-NL	NonStatic	Max	-754.513	-41.111	0.	0.
41	0.	SLU 2-NL	NonStatic	Min	-881.664	-291.523	0.	0.
41	0.43006	SLU 2-NL	NonStatic	Min	-859.907	-252.726	0.	0.
41	0.43006	SLU 2-NL	NonStatic	Min	-859.907	-251.75	0.	0.
41	0.86012	SLU 2-NL	NonStatic	Min	-839.347	-214.489	0.	0.
41	0.86012	SLU 2-NL	NonStatic	Min	-839.347	-213.087	0.	0.
41	1.29018	SLU 2-NL	NonStatic	Min	-819.985	-177.361	0.	0.
41	1.29018	SLU 2-NL	NonStatic	Min	-819.985	-175.588	0.	0.
41	1.50521	SLU 2-NL	NonStatic	Min	-810.753	-158.301	0.	0.
41	1.72024	SLU 2-NL	NonStatic	Min	-801.82	-141.398	0.	0.
41	1.72024	SLU 2-NL	NonStatic	Min	-801.82	-139.312	0.	0.
41	2.1503	SLU 2-NL	NonStatic	Min	-784.853	-106.658	0.	0.
41	2.1503	SLU 2-NL	NonStatic	Min	-784.853	-104.323	0.	0.
41	2.58036	SLU 2-NL	NonStatic	Min	-769.084	-73.205	0.	0.
41	2.58036	SLU 2-NL	NonStatic	Min	-769.084	-70.693	0.	0.
41	3.01042	SLU 2-NL	NonStatic	Min	-754.513	-41.111	0.	0.
41	0.	SLU 3-NL	NonStatic	Max	-586.523	-400.524	0.	0.
41	0.43006	SLU 3-NL	NonStatic	Max	-569.786	-344.591	0.	0.
41	0.43006	SLU 3-NL	NonStatic	Max	-569.786	-344.454	0.	0.
41	0.86012	SLU 3-NL	NonStatic	Max	-553.971	-290.518	0.	0.
41	0.86012	SLU 3-NL	NonStatic	Max	-553.971	-290.31	0.	0.
41	1.29018	SLU 3-NL	NonStatic	Max	-539.077	-238.371	0.	0.
41	1.29018	SLU 3-NL	NonStatic	Max	-539.077	-238.118	0.	0.
41	1.50521	SLU 3-NL	NonStatic	Max	-531.975	-212.897	0.	0.
41	1.72024	SLU 3-NL	NonStatic	Max	-525.104	-188.176	0.	0.
41	1.72024	SLU 3-NL	NonStatic	Max	-525.104	-187.9	0.	0.
41	2.1503	SLU 3-NL	NonStatic	Max	-512.052	-139.954	0.	0.
41	2.1503	SLU 3-NL	NonStatic	Max	-512.052	-139.672	0.	0.
41	2.58036	SLU 3-NL	NonStatic	Max	-499.922	-93.723	0.	0.
41	2.58036	SLU 3-NL	NonStatic	Max	-499.922	-93.445	0.	0.
41	3.01042	SLU 3-NL	NonStatic	Max	-488.713	-49.492	0.	0.
41	0.	SLU 3-NL	NonStatic	Min	-586.523	-400.524	0.	0.
41	0.43006	SLU 3-NL	NonStatic	Min	-569.786	-344.591	0.	0.
41	0.43006	SLU 3-NL	NonStatic	Min	-569.786	-344.454	0.	0.
41	0.86012	SLU 3-NL	NonStatic	Min	-553.971	-290.518	0.	0.
41	0.86012	SLU 3-NL	NonStatic	Min	-553.971	-290.31	0.	0.
41	1.29018	SLU 3-NL	NonStatic	Min	-539.077	-238.371	0.	0.
41	1.29018	SLU 3-NL	NonStatic	Min	-539.077	-238.118	0.	0.
41	1.50521	SLU 3-NL	NonStatic	Min	-531.975	-212.897	0.	0.
41	1.72024	SLU 3-NL	NonStatic	Min	-525.104	-188.176	0.	0.

Table: Element Forces - Frames, Part 1 of 2

Frame	Station	OutputCase	CaseType	StepType	P	V2	V3	T
	m				KN	KN	KN	KN-m
41	1.72024	SLU 3-NL	NonStatic	Min	-525.104	-187.9	0.	0.
41	2.1503	SLU 3-NL	NonStatic	Min	-512.052	-139.954	0.	0.
41	2.1503	SLU 3-NL	NonStatic	Min	-512.052	-139.672	0.	0.
41	2.58036	SLU 3-NL	NonStatic	Min	-499.922	-93.723	0.	0.
41	2.58036	SLU 3-NL	NonStatic	Min	-499.922	-93.445	0.	0.
41	3.01042	SLU 3-NL	NonStatic	Min	-488.713	-49.492	0.	0.
41	0.	SLU 4-NL	NonStatic	Max	-890.49	-389.922	0.	0.
41	0.43006	SLU 4-NL	NonStatic	Max	-868.733	-351.124	0.	0.
41	0.43006	SLU 4-NL	NonStatic	Max	-868.736	-337.118	0.	0.
41	0.86012	SLU 4-NL	NonStatic	Max	-848.176	-299.856	0.	0.
41	0.86012	SLU 4-NL	NonStatic	Max	-848.179	-285.254	0.	0.
41	1.29018	SLU 4-NL	NonStatic	Max	-828.816	-249.529	0.	0.
41	1.29018	SLU 4-NL	NonStatic	Max	-828.819	-234.381	0.	0.
41	1.50521	SLU 4-NL	NonStatic	Max	-819.587	-217.095	0.	0.
41	1.72024	SLU 4-NL	NonStatic	Max	-810.655	-200.192	0.	0.
41	1.72024	SLU 4-NL	NonStatic	Max	-810.657	-184.547	0.	0.
41	2.1503	SLU 4-NL	NonStatic	Max	-793.69	-151.893	0.	0.
41	2.1503	SLU 4-NL	NonStatic	Max	-793.693	-135.8	0.	0.
41	2.58036	SLU 4-NL	NonStatic	Max	-777.924	-104.682	0.	0.
41	2.58036	SLU 4-NL	NonStatic	Max	-777.926	-88.191	0.	0.
41	3.01042	SLU 4-NL	NonStatic	Max	-763.354	-58.609	0.	0.
41	0.	SLU 4-NL	NonStatic	Min	-890.49	-389.922	0.	0.
41	0.43006	SLU 4-NL	NonStatic	Min	-868.733	-351.124	0.	0.
41	0.43006	SLU 4-NL	NonStatic	Min	-868.736	-337.118	0.	0.
41	0.86012	SLU 4-NL	NonStatic	Min	-848.176	-299.856	0.	0.
41	0.86012	SLU 4-NL	NonStatic	Min	-848.179	-285.254	0.	0.
41	1.29018	SLU 4-NL	NonStatic	Min	-828.816	-249.529	0.	0.
41	1.29018	SLU 4-NL	NonStatic	Min	-828.819	-234.381	0.	0.
41	1.50521	SLU 4-NL	NonStatic	Min	-819.587	-217.095	0.	0.
41	1.72024	SLU 4-NL	NonStatic	Min	-810.655	-200.192	0.	0.
41	1.72024	SLU 4-NL	NonStatic	Min	-810.657	-184.547	0.	0.
41	2.1503	SLU 4-NL	NonStatic	Min	-793.69	-151.893	0.	0.
41	2.1503	SLU 4-NL	NonStatic	Min	-793.693	-135.8	0.	0.
41	2.58036	SLU 4-NL	NonStatic	Min	-777.924	-104.682	0.	0.
41	2.58036	SLU 4-NL	NonStatic	Min	-777.926	-88.191	0.	0.
41	3.01042	SLU 4-NL	NonStatic	Min	-763.354	-58.609	0.	0.
41	0.	SLU 5-NL	NonStatic	Max	-595.624	-389.118	0.	0.
41	0.43006	SLU 5-NL	NonStatic	Max	-578.887	-350.321	0.	0.
41	0.43006	SLU 5-NL	NonStatic	Max	-578.889	-335.764	0.	0.
41	0.86012	SLU 5-NL	NonStatic	Max	-563.074	-298.502	0.	0.
41	0.86012	SLU 5-NL	NonStatic	Max	-563.076	-283.59	0.	0.
41	1.29018	SLU 5-NL	NonStatic	Max	-548.181	-247.864	0.	0.
41	1.29018	SLU 5-NL	NonStatic	Max	-548.183	-232.621	0.	0.
41	1.50521	SLU 5-NL	NonStatic	Max	-541.082	-215.334	0.	0.
41	1.72024	SLU 5-NL	NonStatic	Max	-534.21	-198.432	0.	0.
41	1.72024	SLU 5-NL	NonStatic	Max	-534.212	-182.879	0.	0.
41	2.1503	SLU 5-NL	NonStatic	Max	-521.161	-150.226	0.	0.
41	2.1503	SLU 5-NL	NonStatic	Max	-521.162	-134.379	0.	0.
41	2.58036	SLU 5-NL	NonStatic	Max	-509.032	-103.261	0.	0.
41	2.58036	SLU 5-NL	NonStatic	Max	-509.034	-87.129	0.	0.
41	3.01042	SLU 5-NL	NonStatic	Max	-497.825	-57.547	0.	0.
41	0.	SLU 5-NL	NonStatic	Min	-595.624	-389.118	0.	0.
41	0.43006	SLU 5-NL	NonStatic	Min	-578.887	-350.321	0.	0.
41	0.43006	SLU 5-NL	NonStatic	Min	-578.889	-335.764	0.	0.

Table: Element Forces - Frames, Part 1 of 2

Frame	Station	OutputCase	CaseType	StepType	P	V2	V3	T
	m				KN	KN	KN	KN-m
41	0.86012	SLU 5-NL	NonStatic	Min	-563.074	-298.502	0.	0.
41	0.86012	SLU 5-NL	NonStatic	Min	-563.076	-283.59	0.	0.
41	1.29018	SLU 5-NL	NonStatic	Min	-548.181	-247.864	0.	0.
41	1.29018	SLU 5-NL	NonStatic	Min	-548.183	-232.621	0.	0.
41	1.50521	SLU 5-NL	NonStatic	Min	-541.082	-215.334	0.	0.
41	1.72024	SLU 5-NL	NonStatic	Min	-534.21	-198.432	0.	0.
41	1.72024	SLU 5-NL	NonStatic	Min	-534.212	-182.879	0.	0.
41	2.1503	SLU 5-NL	NonStatic	Min	-521.161	-150.226	0.	0.
41	2.1503	SLU 5-NL	NonStatic	Min	-521.162	-134.379	0.	0.
41	2.58036	SLU 5-NL	NonStatic	Min	-509.032	-103.261	0.	0.
41	2.58036	SLU 5-NL	NonStatic	Min	-509.034	-87.129	0.	0.
41	3.01042	SLU 5-NL	NonStatic	Min	-497.825	-57.547	0.	0.
41	0.	SLU 6-NL	NonStatic	Max	-872.815	-405.228	0.	0.
41	0.43006	SLU 6-NL	NonStatic	Max	-851.057	-349.295	0.	0.
41	0.43006	SLU 6-NL	NonStatic	Max	-851.057	-349.296	0.	0.
41	0.86012	SLU 6-NL	NonStatic	Max	-830.497	-295.359	0.	0.
41	0.86012	SLU 6-NL	NonStatic	Max	-830.497	-295.359	0.	0.
41	1.29018	SLU 6-NL	NonStatic	Max	-811.135	-243.42	0.	0.
41	1.29018	SLU 6-NL	NonStatic	Max	-811.135	-243.42	0.	0.
41	1.50521	SLU 6-NL	NonStatic	Max	-801.903	-218.199	0.	0.
41	1.72024	SLU 6-NL	NonStatic	Max	-792.97	-193.477	0.	0.
41	1.72024	SLU 6-NL	NonStatic	Max	-792.97	-193.477	0.	0.
41	2.1503	SLU 6-NL	NonStatic	Max	-776.003	-145.531	0.	0.
41	2.1503	SLU 6-NL	NonStatic	Max	-776.003	-145.531	0.	0.
41	2.58036	SLU 6-NL	NonStatic	Max	-760.234	-99.582	0.	0.
41	2.58036	SLU 6-NL	NonStatic	Max	-760.234	-99.582	0.	0.
41	3.01042	SLU 6-NL	NonStatic	Max	-745.662	-55.629	0.	0.
41	0.	SLU 6-NL	NonStatic	Min	-872.815	-405.228	0.	0.
41	0.43006	SLU 6-NL	NonStatic	Min	-851.057	-349.295	0.	0.
41	0.43006	SLU 6-NL	NonStatic	Min	-851.057	-349.296	0.	0.
41	0.86012	SLU 6-NL	NonStatic	Min	-830.497	-295.359	0.	0.
41	0.86012	SLU 6-NL	NonStatic	Min	-830.497	-295.359	0.	0.
41	1.29018	SLU 6-NL	NonStatic	Min	-811.135	-243.42	0.	0.
41	1.29018	SLU 6-NL	NonStatic	Min	-811.135	-243.42	0.	0.
41	1.50521	SLU 6-NL	NonStatic	Min	-801.903	-218.199	0.	0.
41	1.72024	SLU 6-NL	NonStatic	Min	-792.97	-193.477	0.	0.
41	1.72024	SLU 6-NL	NonStatic	Min	-792.97	-193.477	0.	0.
41	2.1503	SLU 6-NL	NonStatic	Min	-776.003	-145.531	0.	0.
41	2.1503	SLU 6-NL	NonStatic	Min	-776.003	-145.531	0.	0.
41	2.58036	SLU 6-NL	NonStatic	Min	-760.234	-99.582	0.	0.
41	2.58036	SLU 6-NL	NonStatic	Min	-760.234	-99.582	0.	0.
41	3.01042	SLU 6-NL	NonStatic	Min	-745.662	-55.629	0.	0.
41	0.	SLU 7-NL	NonStatic	Max	-577.399	-405.483	0.	0.
41	0.43006	SLU 7-NL	NonStatic	Max	-560.662	-349.55	0.	0.
41	0.43006	SLU 7-NL	NonStatic	Max	-560.662	-349.55	0.	0.
41	0.86012	SLU 7-NL	NonStatic	Max	-544.847	-295.614	0.	0.
41	0.86012	SLU 7-NL	NonStatic	Max	-544.847	-295.614	0.	0.
41	1.29018	SLU 7-NL	NonStatic	Max	-529.953	-243.674	0.	0.
41	1.29018	SLU 7-NL	NonStatic	Max	-529.953	-243.675	0.	0.
41	1.50521	SLU 7-NL	NonStatic	Max	-522.851	-218.453	0.	0.
41	1.72024	SLU 7-NL	NonStatic	Max	-515.98	-193.732	0.	0.
41	1.72024	SLU 7-NL	NonStatic	Max	-515.98	-193.732	0.	0.
41	2.1503	SLU 7-NL	NonStatic	Max	-502.928	-145.786	0.	0.
41	2.1503	SLU 7-NL	NonStatic	Max	-502.928	-145.786	0.	0.

Table: Element Forces - Frames, Part 1 of 2

Frame	Station	OutputCase	CaseType	StepType	P	V2	V3	T
	m				KN	KN	KN	KN-m
41	2.58036	SLU 7-NL	NonStatic	Max	-490.798	-99.836	0.	0.
41	2.58036	SLU 7-NL	NonStatic	Max	-490.798	-99.836	0.	0.
41	3.01042	SLU 7-NL	NonStatic	Max	-479.589	-55.883	0.	0.
41	0.	SLU 7-NL	NonStatic	Min	-577.399	-405.483	0.	0.
41	0.43006	SLU 7-NL	NonStatic	Min	-560.662	-349.55	0.	0.
41	0.43006	SLU 7-NL	NonStatic	Min	-560.662	-349.55	0.	0.
41	0.86012	SLU 7-NL	NonStatic	Min	-544.847	-295.614	0.	0.
41	0.86012	SLU 7-NL	NonStatic	Min	-544.847	-295.614	0.	0.
41	1.29018	SLU 7-NL	NonStatic	Min	-529.953	-243.674	0.	0.
41	1.29018	SLU 7-NL	NonStatic	Min	-529.953	-243.675	0.	0.
41	1.50521	SLU 7-NL	NonStatic	Min	-522.851	-218.453	0.	0.
41	1.72024	SLU 7-NL	NonStatic	Min	-515.98	-193.732	0.	0.
41	1.72024	SLU 7-NL	NonStatic	Min	-515.98	-193.732	0.	0.
41	2.1503	SLU 7-NL	NonStatic	Min	-502.928	-145.786	0.	0.
41	2.1503	SLU 7-NL	NonStatic	Min	-502.928	-145.786	0.	0.
41	2.58036	SLU 7-NL	NonStatic	Min	-490.798	-99.836	0.	0.
41	2.58036	SLU 7-NL	NonStatic	Min	-490.798	-99.836	0.	0.
41	3.01042	SLU 7-NL	NonStatic	Min	-479.589	-55.883	0.	0.
41	0.	SLE-C-NL	NonStatic	Max	-665.979	-310.597	0.	0.
41	0.43006	SLE-C-NL	NonStatic	Max	-649.243	-268.136	0.	0.
41	0.43006	SLE-C-NL	NonStatic	Max	-649.243	-267.621	0.	0.
41	0.86012	SLE-C-NL	NonStatic	Max	-633.427	-226.696	0.	0.
41	0.86012	SLE-C-NL	NonStatic	Max	-633.427	-225.952	0.	0.
41	1.29018	SLE-C-NL	NonStatic	Max	-618.533	-186.562	0.	0.
41	1.29018	SLE-C-NL	NonStatic	Max	-618.533	-185.626	0.	0.
41	1.50521	SLE-C-NL	NonStatic	Max	-611.432	-166.507	0.	0.
41	1.72024	SLE-C-NL	NonStatic	Max	-604.56	-147.772	0.	0.
41	1.72024	SLE-C-NL	NonStatic	Max	-604.561	-146.679	0.	0.
41	2.1503	SLE-C-NL	NonStatic	Max	-591.509	-110.361	0.	0.
41	2.1503	SLE-C-NL	NonStatic	Max	-591.509	-109.149	0.	0.
41	2.58036	SLE-C-NL	NonStatic	Max	-579.379	-74.367	0.	0.
41	2.58036	SLE-C-NL	NonStatic	Max	-579.379	-73.075	0.	0.
41	3.01042	SLE-C-NL	NonStatic	Max	-568.17	-39.828	0.	0.
41	0.	SLE-C-NL	NonStatic	Min	-665.979	-310.597	0.	0.
41	0.43006	SLE-C-NL	NonStatic	Min	-649.243	-268.136	0.	0.
41	0.43006	SLE-C-NL	NonStatic	Min	-649.243	-267.621	0.	0.
41	0.86012	SLE-C-NL	NonStatic	Min	-633.427	-226.696	0.	0.
41	0.86012	SLE-C-NL	NonStatic	Min	-633.427	-225.952	0.	0.
41	1.29018	SLE-C-NL	NonStatic	Min	-618.533	-186.562	0.	0.
41	1.29018	SLE-C-NL	NonStatic	Min	-618.533	-185.626	0.	0.
41	1.50521	SLE-C-NL	NonStatic	Min	-611.432	-166.507	0.	0.
41	1.72024	SLE-C-NL	NonStatic	Min	-604.56	-147.772	0.	0.
41	1.72024	SLE-C-NL	NonStatic	Min	-604.561	-146.679	0.	0.
41	2.1503	SLE-C-NL	NonStatic	Min	-591.509	-110.361	0.	0.
41	2.1503	SLE-C-NL	NonStatic	Min	-591.509	-109.149	0.	0.
41	2.58036	SLE-C-NL	NonStatic	Min	-579.379	-74.367	0.	0.
41	2.58036	SLE-C-NL	NonStatic	Min	-579.379	-73.075	0.	0.
41	3.01042	SLE-C-NL	NonStatic	Min	-568.17	-39.828	0.	0.
41	0.	SLE-F-1-NL	NonStatic	Max	-650.088	-281.64	0.	0.
41	0.43006	SLE-F-1-NL	NonStatic	Max	-633.351	-242.843	0.	0.
41	0.43006	SLE-F-1-NL	NonStatic	Max	-633.351	-242.286	0.	0.
41	0.86012	SLE-F-1-NL	NonStatic	Max	-617.536	-205.024	0.	0.
41	0.86012	SLE-F-1-NL	NonStatic	Max	-617.536	-204.219	0.	0.
41	1.29018	SLE-F-1-NL	NonStatic	Max	-602.642	-168.493	0.	0.

Table: Element Forces - Frames, Part 1 of 2

Frame	Station	OutputCase	CaseType	StepType	P	V2	V3	T
	m				KN	KN	KN	KN-m
41	1.29018	SLE-F-1-NL	NonStatic	Max	-602.642	-167.478	0.	0.
41	1.50521	SLE-F-1-NL	NonStatic	Max	-595.54	-150.191	0.	0.
41	1.72024	SLE-F-1-NL	NonStatic	Max	-588.669	-133.288	0.	0.
41	1.72024	SLE-F-1-NL	NonStatic	Max	-588.669	-132.1	0.	0.
41	2.1503	SLE-F-1-NL	NonStatic	Max	-575.618	-99.447	0.	0.
41	2.1503	SLE-F-1-NL	NonStatic	Max	-575.618	-98.124	0.	0.
41	2.58036	SLE-F-1-NL	NonStatic	Max	-563.487	-67.006	0.	0.
41	2.58036	SLE-F-1-NL	NonStatic	Max	-563.488	-65.591	0.	0.
41	3.01042	SLE-F-1-NL	NonStatic	Max	-552.279	-36.009	0.	0.
41	0.	SLE-F-1-NL	NonStatic	Min	-650.088	-281.64	0.	0.
41	0.43006	SLE-F-1-NL	NonStatic	Min	-633.351	-242.843	0.	0.
41	0.43006	SLE-F-1-NL	NonStatic	Min	-633.351	-242.286	0.	0.
41	0.86012	SLE-F-1-NL	NonStatic	Min	-617.536	-205.024	0.	0.
41	0.86012	SLE-F-1-NL	NonStatic	Min	-617.536	-204.219	0.	0.
41	1.29018	SLE-F-1-NL	NonStatic	Min	-602.642	-168.493	0.	0.
41	1.29018	SLE-F-1-NL	NonStatic	Min	-602.642	-167.478	0.	0.
41	1.50521	SLE-F-1-NL	NonStatic	Min	-595.54	-150.191	0.	0.
41	1.72024	SLE-F-1-NL	NonStatic	Min	-588.669	-133.288	0.	0.
41	1.72024	SLE-F-1-NL	NonStatic	Min	-588.669	-132.1	0.	0.
41	2.1503	SLE-F-1-NL	NonStatic	Min	-575.618	-99.447	0.	0.
41	2.1503	SLE-F-1-NL	NonStatic	Min	-575.618	-98.124	0.	0.
41	2.58036	SLE-F-1-NL	NonStatic	Min	-563.487	-67.006	0.	0.
41	2.58036	SLE-F-1-NL	NonStatic	Min	-563.488	-65.591	0.	0.
41	3.01042	SLE-F-1-NL	NonStatic	Min	-552.279	-36.009	0.	0.
41	0.	SLE-F-2-NL	NonStatic	Max	-589.533	-299.824	0.	0.
41	0.43006	SLE-F-2-NL	NonStatic	Max	-572.796	-261.026	0.	0.
41	0.43006	SLE-F-2-NL	NonStatic	Max	-572.796	-258.697	0.	0.
41	0.86012	SLE-F-2-NL	NonStatic	Max	-556.981	-221.435	0.	0.
41	0.86012	SLE-F-2-NL	NonStatic	Max	-556.981	-218.778	0.	0.
41	1.29018	SLE-F-2-NL	NonStatic	Max	-542.087	-183.052	0.	0.
41	1.29018	SLE-F-2-NL	NonStatic	Max	-542.088	-180.097	0.	0.
41	1.50521	SLE-F-2-NL	NonStatic	Max	-534.986	-162.81	0.	0.
41	1.72024	SLE-F-2-NL	NonStatic	Max	-528.115	-145.907	0.	0.
41	1.72024	SLE-F-2-NL	NonStatic	Max	-528.115	-142.684	0.	0.
41	2.1503	SLE-F-2-NL	NonStatic	Max	-515.064	-110.03	0.	0.
41	2.1503	SLE-F-2-NL	NonStatic	Max	-515.064	-106.567	0.	0.
41	2.58036	SLE-F-2-NL	NonStatic	Max	-502.934	-75.449	0.	0.
41	2.58036	SLE-F-2-NL	NonStatic	Max	-502.934	-71.775	0.	0.
41	3.01042	SLE-F-2-NL	NonStatic	Max	-491.725	-42.193	0.	0.
41	0.	SLE-F-2-NL	NonStatic	Min	-589.533	-299.824	0.	0.
41	0.43006	SLE-F-2-NL	NonStatic	Min	-572.796	-261.026	0.	0.
41	0.43006	SLE-F-2-NL	NonStatic	Min	-572.796	-258.697	0.	0.
41	0.86012	SLE-F-2-NL	NonStatic	Min	-556.981	-221.435	0.	0.
41	0.86012	SLE-F-2-NL	NonStatic	Min	-556.981	-218.778	0.	0.
41	1.29018	SLE-F-2-NL	NonStatic	Min	-542.087	-183.052	0.	0.
41	1.29018	SLE-F-2-NL	NonStatic	Min	-542.088	-180.097	0.	0.
41	1.50521	SLE-F-2-NL	NonStatic	Min	-534.986	-162.81	0.	0.
41	1.72024	SLE-F-2-NL	NonStatic	Min	-528.115	-145.907	0.	0.
41	1.72024	SLE-F-2-NL	NonStatic	Min	-528.115	-142.684	0.	0.
41	2.1503	SLE-F-2-NL	NonStatic	Min	-515.064	-110.03	0.	0.
41	2.1503	SLE-F-2-NL	NonStatic	Min	-515.064	-106.567	0.	0.
41	2.58036	SLE-F-2-NL	NonStatic	Min	-502.934	-75.449	0.	0.
41	2.58036	SLE-F-2-NL	NonStatic	Min	-502.934	-71.775	0.	0.
41	3.01042	SLE-F-2-NL	NonStatic	Min	-491.725	-42.193	0.	0.

Table: Element Forces - Frames, Part 1 of 2

Frame	Station	OutputCase	CaseType	StepType	P	V2	V3	T
	m				KN	KN	KN	KN-m
41	0.	SLE-F-3-NL	NonStatic	Max	-583.51	-303.	0.	0.
41	0.43006	SLE-F-3-NL	NonStatic	Max	-566.773	-261.271	0.	0.
41	0.43006	SLE-F-3-NL	NonStatic	Max	-566.773	-261.271	0.	0.
41	0.86012	SLE-F-3-NL	NonStatic	Max	-550.958	-221.078	0.	0.
41	0.86012	SLE-F-3-NL	NonStatic	Max	-550.958	-221.078	0.	0.
41	1.29018	SLE-F-3-NL	NonStatic	Max	-536.064	-182.421	0.	0.
41	1.29018	SLE-F-3-NL	NonStatic	Max	-536.064	-182.421	0.	0.
41	1.50521	SLE-F-3-NL	NonStatic	Max	-528.962	-163.668	0.	0.
41	1.72024	SLE-F-3-NL	NonStatic	Max	-522.091	-145.3	0.	0.
41	1.72024	SLE-F-3-NL	NonStatic	Max	-522.091	-145.3	0.	0.
41	2.1503	SLE-F-3-NL	NonStatic	Max	-509.039	-109.715	0.	0.
41	2.1503	SLE-F-3-NL	NonStatic	Max	-509.039	-109.715	0.	0.
41	2.58036	SLE-F-3-NL	NonStatic	Max	-496.909	-75.666	0.	0.
41	2.58036	SLE-F-3-NL	NonStatic	Max	-496.909	-75.666	0.	0.
41	3.01042	SLE-F-3-NL	NonStatic	Max	-485.7	-43.152	0.	0.
41	0.	SLE-F-3-NL	NonStatic	Min	-583.51	-303.	0.	0.
41	0.43006	SLE-F-3-NL	NonStatic	Min	-566.773	-261.271	0.	0.
41	0.43006	SLE-F-3-NL	NonStatic	Min	-566.773	-261.271	0.	0.
41	0.86012	SLE-F-3-NL	NonStatic	Min	-550.958	-221.078	0.	0.
41	0.86012	SLE-F-3-NL	NonStatic	Min	-550.958	-221.078	0.	0.
41	1.29018	SLE-F-3-NL	NonStatic	Min	-536.064	-182.421	0.	0.
41	1.29018	SLE-F-3-NL	NonStatic	Min	-536.064	-182.421	0.	0.
41	1.50521	SLE-F-3-NL	NonStatic	Min	-528.962	-163.668	0.	0.
41	1.72024	SLE-F-3-NL	NonStatic	Min	-522.091	-145.3	0.	0.
41	1.72024	SLE-F-3-NL	NonStatic	Min	-522.091	-145.3	0.	0.
41	2.1503	SLE-F-3-NL	NonStatic	Min	-509.039	-109.715	0.	0.
41	2.1503	SLE-F-3-NL	NonStatic	Min	-509.039	-109.715	0.	0.
41	2.58036	SLE-F-3-NL	NonStatic	Min	-496.909	-75.666	0.	0.
41	2.58036	SLE-F-3-NL	NonStatic	Min	-496.909	-75.666	0.	0.
41	3.01042	SLE-F-3-NL	NonStatic	Min	-485.7	-43.152	0.	0.
41	0.	SLE-QP-NL	NonStatic	Max	-586.523	-282.765	0.	0.
41	0.43006	SLE-QP-NL	NonStatic	Max	-569.786	-243.968	0.	0.
41	0.43006	SLE-QP-NL	NonStatic	Max	-569.786	-243.541	0.	0.
41	0.86012	SLE-QP-NL	NonStatic	Max	-553.971	-206.28	0.	0.
41	0.86012	SLE-QP-NL	NonStatic	Max	-553.971	-205.662	0.	0.
41	1.29018	SLE-QP-NL	NonStatic	Max	-539.077	-169.936	0.	0.
41	1.29018	SLE-QP-NL	NonStatic	Max	-539.077	-169.16	0.	0.
41	1.50521	SLE-QP-NL	NonStatic	Max	-531.975	-151.873	0.	0.
41	1.72024	SLE-QP-NL	NonStatic	Max	-525.104	-134.97	0.	0.
41	1.72024	SLE-QP-NL	NonStatic	Max	-525.104	-134.066	0.	0.
41	2.1503	SLE-QP-NL	NonStatic	Max	-512.052	-101.412	0.	0.
41	2.1503	SLE-QP-NL	NonStatic	Max	-512.052	-100.413	0.	0.
41	2.58036	SLE-QP-NL	NonStatic	Max	-499.922	-69.295	0.	0.
41	2.58036	SLE-QP-NL	NonStatic	Max	-499.922	-68.231	0.	0.
41	3.01042	SLE-QP-NL	NonStatic	Max	-488.713	-38.649	0.	0.
41	0.	SLE-QP-NL	NonStatic	Min	-586.523	-282.765	0.	0.
41	0.43006	SLE-QP-NL	NonStatic	Min	-569.786	-243.968	0.	0.
41	0.43006	SLE-QP-NL	NonStatic	Min	-569.786	-243.541	0.	0.
41	0.86012	SLE-QP-NL	NonStatic	Min	-553.971	-206.28	0.	0.
41	0.86012	SLE-QP-NL	NonStatic	Min	-553.971	-205.662	0.	0.
41	1.29018	SLE-QP-NL	NonStatic	Min	-539.077	-169.936	0.	0.
41	1.29018	SLE-QP-NL	NonStatic	Min	-539.077	-169.16	0.	0.
41	1.50521	SLE-QP-NL	NonStatic	Min	-531.975	-151.873	0.	0.
41	1.72024	SLE-QP-NL	NonStatic	Min	-525.104	-134.97	0.	0.

Table: Element Forces - Frames, Part 1 of 2

Frame	Station	OutputCase	CaseType	StepType	P	V2	V3	T
	m				KN	KN	KN	KN-m
41	1.72024	SLE-QP-NL	NonStatic	Min	-525.104	-134.066	0.	0.
41	2.1503	SLE-QP-NL	NonStatic	Min	-512.052	-101.412	0.	0.
41	2.1503	SLE-QP-NL	NonStatic	Min	-512.052	-100.413	0.	0.
41	2.58036	SLE-QP-NL	NonStatic	Min	-499.922	-69.295	0.	0.
41	2.58036	SLE-QP-NL	NonStatic	Min	-499.922	-68.231	0.	0.
41	3.01042	SLE-QP-NL	NonStatic	Min	-488.713	-38.649	0.	0.
41	0.	SLV1-NL	NonStatic	Max	-615.252	-380.175	0.	0.
41	0.43006	SLV1-NL	NonStatic	Max	-598.281	-342.212	0.	0.
41	0.43006	SLV1-NL	NonStatic	Max	-598.283	-328.353	0.	0.
41	0.86012	SLV1-NL	NonStatic	Max	-582.246	-291.838	0.	0.
41	0.86012	SLV1-NL	NonStatic	Max	-582.248	-277.549	0.	0.
41	1.29018	SLV1-NL	NonStatic	Max	-567.145	-242.484	0.	0.
41	1.29018	SLV1-NL	NonStatic	Max	-567.147	-227.792	0.	0.
41	1.50521	SLV1-NL	NonStatic	Max	-559.945	-210.803	0.	0.
41	1.72024	SLV1-NL	NonStatic	Max	-552.978	-194.177	0.	0.
41	1.72024	SLV1-NL	NonStatic	Max	-552.98	-179.105	0.	0.
41	2.1503	SLV1-NL	NonStatic	Max	-539.745	-146.94	0.	0.
41	2.1503	SLV1-NL	NonStatic	Max	-539.747	-131.507	0.	0.
41	2.58036	SLV1-NL	NonStatic	Max	-527.446	-100.791	0.	0.
41	2.58036	SLV1-NL	NonStatic	Max	-527.448	-85.011	0.	0.
41	3.01042	SLV1-NL	NonStatic	Max	-516.082	-55.746	0.	0.
41	0.	SLV1-NL	NonStatic	Min	-615.252	-380.175	0.	0.
41	0.43006	SLV1-NL	NonStatic	Min	-598.281	-342.212	0.	0.
41	0.43006	SLV1-NL	NonStatic	Min	-598.283	-328.353	0.	0.
41	0.86012	SLV1-NL	NonStatic	Min	-582.246	-291.838	0.	0.
41	0.86012	SLV1-NL	NonStatic	Min	-582.248	-277.549	0.	0.
41	1.29018	SLV1-NL	NonStatic	Min	-567.145	-242.484	0.	0.
41	1.29018	SLV1-NL	NonStatic	Min	-567.147	-227.792	0.	0.
41	1.50521	SLV1-NL	NonStatic	Min	-559.945	-210.803	0.	0.
41	1.72024	SLV1-NL	NonStatic	Min	-552.978	-194.177	0.	0.
41	1.72024	SLV1-NL	NonStatic	Min	-552.98	-179.105	0.	0.
41	2.1503	SLV1-NL	NonStatic	Min	-539.745	-146.94	0.	0.
41	2.1503	SLV1-NL	NonStatic	Min	-539.747	-131.507	0.	0.
41	2.58036	SLV1-NL	NonStatic	Min	-527.446	-100.791	0.	0.
41	2.58036	SLV1-NL	NonStatic	Min	-527.448	-85.011	0.	0.
41	3.01042	SLV1-NL	NonStatic	Min	-516.082	-55.746	0.	0.
41	0.	SLV2-NL	NonStatic	Max	-590.498	-300.739	0.	0.
41	0.43006	SLV2-NL	NonStatic	Max	-573.527	-259.642	0.	0.
41	0.43006	SLV2-NL	NonStatic	Max	-573.527	-259.642	0.	0.
41	0.86012	SLV2-NL	NonStatic	Max	-557.489	-220.167	0.	0.
41	0.86012	SLV2-NL	NonStatic	Max	-557.489	-220.167	0.	0.
41	1.29018	SLV2-NL	NonStatic	Max	-542.386	-182.315	0.	0.
41	1.29018	SLV2-NL	NonStatic	Max	-542.386	-182.315	0.	0.
41	1.50521	SLV2-NL	NonStatic	Max	-535.185	-163.997	0.	0.
41	1.72024	SLV2-NL	NonStatic	Max	-528.217	-146.084	0.	0.
41	1.72024	SLV2-NL	NonStatic	Max	-528.217	-146.085	0.	0.
41	2.1503	SLV2-NL	NonStatic	Max	-514.982	-111.476	0.	0.
41	2.1503	SLV2-NL	NonStatic	Max	-514.982	-111.476	0.	0.
41	2.58036	SLV2-NL	NonStatic	Max	-502.682	-78.49	0.	0.
41	2.58036	SLV2-NL	NonStatic	Max	-502.682	-78.49	0.	0.
41	3.01042	SLV2-NL	NonStatic	Max	-491.315	-47.126	0.	0.
41	0.	SLV2-NL	NonStatic	Min	-590.498	-300.739	0.	0.
41	0.43006	SLV2-NL	NonStatic	Min	-573.527	-259.642	0.	0.
41	0.43006	SLV2-NL	NonStatic	Min	-573.527	-259.642	0.	0.

Table: Element Forces - Frames, Part 1 of 2

Frame	Station	OutputCase	CaseType	StepType	P	V2	V3	T
	m				KN	KN	KN	KN-m
41	0.86012	SLV2-NL	NonStatic	Min	-557.489	-220.167	0.	0.
41	0.86012	SLV2-NL	NonStatic	Min	-557.489	-220.167	0.	0.
41	1.29018	SLV2-NL	NonStatic	Min	-542.386	-182.315	0.	0.
41	1.29018	SLV2-NL	NonStatic	Min	-542.386	-182.315	0.	0.
41	1.50521	SLV2-NL	NonStatic	Min	-535.185	-163.997	0.	0.
41	1.72024	SLV2-NL	NonStatic	Min	-528.217	-146.084	0.	0.
41	1.72024	SLV2-NL	NonStatic	Min	-528.217	-146.085	0.	0.
41	2.1503	SLV2-NL	NonStatic	Min	-514.982	-111.476	0.	0.
41	2.1503	SLV2-NL	NonStatic	Min	-514.982	-111.476	0.	0.
41	2.58036	SLV2-NL	NonStatic	Min	-502.682	-78.49	0.	0.
41	2.58036	SLV2-NL	NonStatic	Min	-502.682	-78.49	0.	0.
41	3.01042	SLV2-NL	NonStatic	Min	-491.315	-47.126	0.	0.
41	0.	SLV3-NL	NonStatic	Max	-614.39	-378.938	0.	0.
41	0.43006	SLV3-NL	NonStatic	Max	-597.888	-340.974	0.	0.
41	0.43006	SLV3-NL	NonStatic	Max	-597.89	-327.12	0.	0.
41	0.86012	SLV3-NL	NonStatic	Max	-582.297	-290.606	0.	0.
41	0.86012	SLV3-NL	NonStatic	Max	-582.299	-276.32	0.	0.
41	1.29018	SLV3-NL	NonStatic	Max	-567.614	-241.256	0.	0.
41	1.29018	SLV3-NL	NonStatic	Max	-567.616	-226.565	0.	0.
41	1.50521	SLV3-NL	NonStatic	Max	-560.615	-209.577	0.	0.
41	1.72024	SLV3-NL	NonStatic	Max	-553.84	-192.951	0.	0.
41	1.72024	SLV3-NL	NonStatic	Max	-553.842	-177.88	0.	0.
41	2.1503	SLV3-NL	NonStatic	Max	-540.974	-145.715	0.	0.
41	2.1503	SLV3-NL	NonStatic	Max	-540.976	-130.281	0.	0.
41	2.58036	SLV3-NL	NonStatic	Max	-529.016	-99.566	0.	0.
41	2.58036	SLV3-NL	NonStatic	Max	-529.018	-83.783	0.	0.
41	3.01042	SLV3-NL	NonStatic	Max	-517.966	-54.518	0.	0.
41	0.	SLV3-NL	NonStatic	Min	-614.39	-378.938	0.	0.
41	0.43006	SLV3-NL	NonStatic	Min	-597.888	-340.974	0.	0.
41	0.43006	SLV3-NL	NonStatic	Min	-597.89	-327.12	0.	0.
41	0.86012	SLV3-NL	NonStatic	Min	-582.297	-290.606	0.	0.
41	0.86012	SLV3-NL	NonStatic	Min	-582.299	-276.32	0.	0.
41	1.29018	SLV3-NL	NonStatic	Min	-567.614	-241.256	0.	0.
41	1.29018	SLV3-NL	NonStatic	Min	-567.616	-226.565	0.	0.
41	1.50521	SLV3-NL	NonStatic	Min	-560.615	-209.577	0.	0.
41	1.72024	SLV3-NL	NonStatic	Min	-553.84	-192.951	0.	0.
41	1.72024	SLV3-NL	NonStatic	Min	-553.842	-177.88	0.	0.
41	2.1503	SLV3-NL	NonStatic	Min	-540.974	-145.715	0.	0.
41	2.1503	SLV3-NL	NonStatic	Min	-540.976	-130.281	0.	0.
41	2.58036	SLV3-NL	NonStatic	Min	-529.016	-99.566	0.	0.
41	2.58036	SLV3-NL	NonStatic	Min	-529.018	-83.783	0.	0.
41	3.01042	SLV3-NL	NonStatic	Min	-517.966	-54.518	0.	0.
41	0.	SLV4-NL	NonStatic	Max	-589.639	-299.493	0.	0.
41	0.43006	SLV4-NL	NonStatic	Max	-573.138	-258.396	0.	0.
41	0.43006	SLV4-NL	NonStatic	Max	-573.138	-258.396	0.	0.
41	0.86012	SLV4-NL	NonStatic	Max	-557.544	-218.922	0.	0.
41	0.86012	SLV4-NL	NonStatic	Max	-557.544	-218.922	0.	0.
41	1.29018	SLV4-NL	NonStatic	Max	-542.859	-181.069	0.	0.
41	1.29018	SLV4-NL	NonStatic	Max	-542.859	-181.069	0.	0.
41	1.50521	SLV4-NL	NonStatic	Max	-535.857	-162.751	0.	0.
41	1.72024	SLV4-NL	NonStatic	Max	-529.083	-144.839	0.	0.
41	1.72024	SLV4-NL	NonStatic	Max	-529.083	-144.839	0.	0.
41	2.1503	SLV4-NL	NonStatic	Max	-516.214	-110.23	0.	0.
41	2.1503	SLV4-NL	NonStatic	Max	-516.214	-110.23	0.	0.

Table: Element Forces - Frames, Part 1 of 2

Frame	Station	OutputCase	CaseType	StepType	P	V2	V3	T
	m				KN	KN	KN	KN-m
41	2.58036	SLV4-NL	NonStatic	Max	-504.254	-77.244	0.	0.
41	2.58036	SLV4-NL	NonStatic	Max	-504.254	-77.244	0.	0.
41	3.01042	SLV4-NL	NonStatic	Max	-493.203	-45.88	0.	0.
41	0.	SLV4-NL	NonStatic	Min	-589.639	-299.493	0.	0.
41	0.43006	SLV4-NL	NonStatic	Min	-573.138	-258.396	0.	0.
41	0.43006	SLV4-NL	NonStatic	Min	-573.138	-258.396	0.	0.
41	0.86012	SLV4-NL	NonStatic	Min	-557.544	-218.922	0.	0.
41	0.86012	SLV4-NL	NonStatic	Min	-557.544	-218.922	0.	0.
41	1.29018	SLV4-NL	NonStatic	Min	-542.859	-181.069	0.	0.
41	1.29018	SLV4-NL	NonStatic	Min	-542.859	-181.069	0.	0.
41	1.50521	SLV4-NL	NonStatic	Min	-535.857	-162.751	0.	0.
41	1.72024	SLV4-NL	NonStatic	Min	-529.083	-144.839	0.	0.
41	1.72024	SLV4-NL	NonStatic	Min	-529.083	-144.839	0.	0.
41	2.1503	SLV4-NL	NonStatic	Min	-516.214	-110.23	0.	0.
41	2.1503	SLV4-NL	NonStatic	Min	-516.214	-110.23	0.	0.
41	2.58036	SLV4-NL	NonStatic	Min	-504.254	-77.244	0.	0.
41	2.58036	SLV4-NL	NonStatic	Min	-504.254	-77.244	0.	0.
41	3.01042	SLV4-NL	NonStatic	Min	-493.203	-45.88	0.	0.
41	0.	SLV5-NL	NonStatic	Max	-607.469	-313.478	0.	0.
41	0.43006	SLV5-NL	NonStatic	Max	-589.949	-274.418	0.	0.
41	0.43006	SLV5-NL	NonStatic	Max	-589.95	-270.54	0.	0.
41	0.86012	SLV5-NL	NonStatic	Max	-573.394	-232.989	0.	0.
41	0.86012	SLV5-NL	NonStatic	Max	-573.395	-228.842	0.	0.
41	1.29018	SLV5-NL	NonStatic	Max	-557.803	-192.802	0.	0.
41	1.29018	SLV5-NL	NonStatic	Max	-557.804	-188.418	0.	0.
41	1.50521	SLV5-NL	NonStatic	Max	-550.37	-170.964	0.	0.
41	1.72024	SLV5-NL	NonStatic	Max	-543.177	-153.888	0.	0.
41	1.72024	SLV5-NL	NonStatic	Max	-543.177	-149.297	0.	0.
41	2.1503	SLV5-NL	NonStatic	Max	-529.515	-116.277	0.	0.
41	2.1503	SLV5-NL	NonStatic	Max	-529.515	-111.508	0.	0.
41	2.58036	SLV5-NL	NonStatic	Max	-516.817	-79.998	0.	0.
41	2.58036	SLV5-NL	NonStatic	Max	-516.818	-75.08	0.	0.
41	3.01042	SLV5-NL	NonStatic	Max	-505.084	-45.08	0.	0.
41	0.	SLV5-NL	NonStatic	Min	-607.469	-313.478	0.	0.
41	0.43006	SLV5-NL	NonStatic	Min	-589.949	-274.418	0.	0.
41	0.43006	SLV5-NL	NonStatic	Min	-589.95	-270.54	0.	0.
41	0.86012	SLV5-NL	NonStatic	Min	-573.394	-232.989	0.	0.
41	0.86012	SLV5-NL	NonStatic	Min	-573.395	-228.842	0.	0.
41	1.29018	SLV5-NL	NonStatic	Min	-557.803	-192.802	0.	0.
41	1.29018	SLV5-NL	NonStatic	Min	-557.804	-188.418	0.	0.
41	1.50521	SLV5-NL	NonStatic	Min	-550.37	-170.964	0.	0.
41	1.72024	SLV5-NL	NonStatic	Min	-543.177	-153.888	0.	0.
41	1.72024	SLV5-NL	NonStatic	Min	-543.177	-149.297	0.	0.
41	2.1503	SLV5-NL	NonStatic	Min	-529.515	-116.277	0.	0.
41	2.1503	SLV5-NL	NonStatic	Min	-529.515	-111.508	0.	0.
41	2.58036	SLV5-NL	NonStatic	Min	-516.817	-79.998	0.	0.
41	2.58036	SLV5-NL	NonStatic	Min	-516.818	-75.08	0.	0.
41	3.01042	SLV5-NL	NonStatic	Min	-505.084	-45.08	0.	0.
41	0.	SLV6-NL	NonStatic	Max	-600.249	-289.118	0.	0.
41	0.43006	SLV6-NL	NonStatic	Max	-582.73	-249.118	0.	0.
41	0.43006	SLV6-NL	NonStatic	Max	-582.73	-249.118	0.	0.
41	0.86012	SLV6-NL	NonStatic	Max	-566.174	-210.679	0.	0.
41	0.86012	SLV6-NL	NonStatic	Max	-566.174	-210.679	0.	0.
41	1.29018	SLV6-NL	NonStatic	Max	-550.583	-173.803	0.	0.

Table: Element Forces - Frames, Part 1 of 2

Frame	Station	OutputCase	CaseType	StepType	P	V2	V3	T
	m				KN	KN	KN	KN-m
41	1.29018	SLV6-NL	NonStatic	Max	-550.583	-173.803	0.	0.
41	1.50521	SLV6-NL	NonStatic	Max	-543.149	-155.95	0.	0.
41	1.72024	SLV6-NL	NonStatic	Max	-535.956	-138.488	0.	0.
41	1.72024	SLV6-NL	NonStatic	Max	-535.956	-138.488	0.	0.
41	2.1503	SLV6-NL	NonStatic	Max	-522.294	-104.734	0.	0.
41	2.1503	SLV6-NL	NonStatic	Max	-522.294	-104.735	0.	0.
41	2.58036	SLV6-NL	NonStatic	Max	-509.596	-72.543	0.	0.
41	2.58036	SLV6-NL	NonStatic	Max	-509.596	-72.543	0.	0.
41	3.01042	SLV6-NL	NonStatic	Max	-497.862	-41.914	0.	0.
41	0.	SLV6-NL	NonStatic	Min	-600.249	-289.118	0.	0.
41	0.43006	SLV6-NL	NonStatic	Min	-582.73	-249.118	0.	0.
41	0.43006	SLV6-NL	NonStatic	Min	-582.73	-249.118	0.	0.
41	0.86012	SLV6-NL	NonStatic	Min	-566.174	-210.679	0.	0.
41	0.86012	SLV6-NL	NonStatic	Min	-566.174	-210.679	0.	0.
41	1.29018	SLV6-NL	NonStatic	Min	-550.583	-173.803	0.	0.
41	1.29018	SLV6-NL	NonStatic	Min	-550.583	-173.803	0.	0.
41	1.50521	SLV6-NL	NonStatic	Min	-543.149	-155.95	0.	0.
41	1.72024	SLV6-NL	NonStatic	Min	-535.956	-138.488	0.	0.
41	1.72024	SLV6-NL	NonStatic	Min	-535.956	-138.488	0.	0.
41	2.1503	SLV6-NL	NonStatic	Min	-522.294	-104.734	0.	0.
41	2.1503	SLV6-NL	NonStatic	Min	-522.294	-104.735	0.	0.
41	2.58036	SLV6-NL	NonStatic	Min	-509.596	-72.543	0.	0.
41	2.58036	SLV6-NL	NonStatic	Min	-509.596	-72.543	0.	0.
41	3.01042	SLV6-NL	NonStatic	Min	-497.862	-41.914	0.	0.
41	0.	SLV7-NL	NonStatic	Max	-604.59	-309.352	0.	0.
41	0.43006	SLV7-NL	NonStatic	Max	-588.637	-270.292	0.	0.
41	0.43006	SLV7-NL	NonStatic	Max	-588.637	-266.43	0.	0.
41	0.86012	SLV7-NL	NonStatic	Max	-573.562	-228.88	0.	0.
41	0.86012	SLV7-NL	NonStatic	Max	-573.562	-224.745	0.	0.
41	1.29018	SLV7-NL	NonStatic	Max	-559.365	-188.705	0.	0.
41	1.29018	SLV7-NL	NonStatic	Max	-559.366	-184.328	0.	0.
41	1.50521	SLV7-NL	NonStatic	Max	-552.597	-166.874	0.	0.
41	1.72024	SLV7-NL	NonStatic	Max	-546.047	-149.798	0.	0.
41	1.72024	SLV7-NL	NonStatic	Max	-546.047	-145.21	0.	0.
41	2.1503	SLV7-NL	NonStatic	Max	-533.606	-112.189	0.	0.
41	2.1503	SLV7-NL	NonStatic	Max	-533.607	-107.418	0.	0.
41	2.58036	SLV7-NL	NonStatic	Max	-522.044	-75.908	0.	0.
41	2.58036	SLV7-NL	NonStatic	Max	-522.044	-70.983	0.	0.
41	3.01042	SLV7-NL	NonStatic	Max	-511.36	-40.983	0.	0.
41	0.	SLV7-NL	NonStatic	Min	-604.59	-309.352	0.	0.
41	0.43006	SLV7-NL	NonStatic	Min	-588.637	-270.292	0.	0.
41	0.43006	SLV7-NL	NonStatic	Min	-588.637	-266.43	0.	0.
41	0.86012	SLV7-NL	NonStatic	Min	-573.562	-228.88	0.	0.
41	0.86012	SLV7-NL	NonStatic	Min	-573.562	-224.745	0.	0.
41	1.29018	SLV7-NL	NonStatic	Min	-559.365	-188.705	0.	0.
41	1.29018	SLV7-NL	NonStatic	Min	-559.366	-184.328	0.	0.
41	1.50521	SLV7-NL	NonStatic	Min	-552.597	-166.874	0.	0.
41	1.72024	SLV7-NL	NonStatic	Min	-546.047	-149.798	0.	0.
41	1.72024	SLV7-NL	NonStatic	Min	-546.047	-145.21	0.	0.
41	2.1503	SLV7-NL	NonStatic	Min	-533.606	-112.189	0.	0.
41	2.1503	SLV7-NL	NonStatic	Min	-533.607	-107.418	0.	0.
41	2.58036	SLV7-NL	NonStatic	Min	-522.044	-75.908	0.	0.
41	2.58036	SLV7-NL	NonStatic	Min	-522.044	-70.983	0.	0.
41	3.01042	SLV7-NL	NonStatic	Min	-511.36	-40.983	0.	0.

Table: Element Forces - Frames, Part 1 of 2

Frame	Station	OutputCase	CaseType	StepType	P	V2	V3	T
	m				KN	KN	KN	KN-m
41	0.	SLV8-NL	NonStatic	Max	-597.39	-284.963	0.	0.
41	0.43006	SLV8-NL	NonStatic	Max	-581.437	-244.963	0.	0.
41	0.43006	SLV8-NL	NonStatic	Max	-581.437	-244.963	0.	0.
41	0.86012	SLV8-NL	NonStatic	Max	-566.361	-206.524	0.	0.
41	0.86012	SLV8-NL	NonStatic	Max	-566.361	-206.524	0.	0.
41	1.29018	SLV8-NL	NonStatic	Max	-552.164	-169.648	0.	0.
41	1.29018	SLV8-NL	NonStatic	Max	-552.164	-169.648	0.	0.
41	1.50521	SLV8-NL	NonStatic	Max	-545.395	-151.795	0.	0.
41	1.72024	SLV8-NL	NonStatic	Max	-538.845	-134.333	0.	0.
41	1.72024	SLV8-NL	NonStatic	Max	-538.845	-134.333	0.	0.
41	2.1503	SLV8-NL	NonStatic	Max	-526.405	-100.579	0.	0.
41	2.1503	SLV8-NL	NonStatic	Max	-526.405	-100.579	0.	0.
41	2.58036	SLV8-NL	NonStatic	Max	-514.842	-68.388	0.	0.
41	2.58036	SLV8-NL	NonStatic	Max	-514.842	-68.388	0.	0.
41	3.01042	SLV8-NL	NonStatic	Max	-504.158	-37.758	0.	0.
41	0.	SLV8-NL	NonStatic	Min	-597.39	-284.963	0.	0.
41	0.43006	SLV8-NL	NonStatic	Min	-581.437	-244.963	0.	0.
41	0.43006	SLV8-NL	NonStatic	Min	-581.437	-244.963	0.	0.
41	0.86012	SLV8-NL	NonStatic	Min	-566.361	-206.524	0.	0.
41	0.86012	SLV8-NL	NonStatic	Min	-566.361	-206.524	0.	0.
41	1.29018	SLV8-NL	NonStatic	Min	-552.164	-169.648	0.	0.
41	1.29018	SLV8-NL	NonStatic	Min	-552.164	-169.648	0.	0.
41	1.50521	SLV8-NL	NonStatic	Min	-545.395	-151.795	0.	0.
41	1.72024	SLV8-NL	NonStatic	Min	-538.845	-134.333	0.	0.
41	1.72024	SLV8-NL	NonStatic	Min	-538.845	-134.333	0.	0.
41	2.1503	SLV8-NL	NonStatic	Min	-526.405	-100.579	0.	0.
41	2.1503	SLV8-NL	NonStatic	Min	-526.405	-100.579	0.	0.
41	2.58036	SLV8-NL	NonStatic	Min	-514.842	-68.388	0.	0.
41	2.58036	SLV8-NL	NonStatic	Min	-514.842	-68.388	0.	0.
41	3.01042	SLV8-NL	NonStatic	Min	-504.158	-37.758	0.	0.
41	0.	SLV9-NL	NonStatic	Max	-598.008	-329.234	0.	0.
41	0.43006	SLV9-NL	NonStatic	Max	-581.507	-288.137	0.	0.
41	0.43006	SLV9-NL	NonStatic	Max	-581.507	-284.152	0.	0.
41	0.86012	SLV9-NL	NonStatic	Max	-565.914	-244.677	0.	0.
41	0.86012	SLV9-NL	NonStatic	Max	-565.915	-240.315	0.	0.
41	1.29018	SLV9-NL	NonStatic	Max	-551.23	-202.463	0.	0.
41	1.29018	SLV9-NL	NonStatic	Max	-551.23	-197.754	0.	0.
41	1.50521	SLV9-NL	NonStatic	Max	-544.228	-179.436	0.	0.
41	1.72024	SLV9-NL	NonStatic	Max	-537.454	-161.524	0.	0.
41	1.72024	SLV9-NL	NonStatic	Max	-537.454	-156.495	0.	0.
41	2.1503	SLV9-NL	NonStatic	Max	-524.586	-121.887	0.	0.
41	2.1503	SLV9-NL	NonStatic	Max	-524.586	-116.564	0.	0.
41	2.58036	SLV9-NL	NonStatic	Max	-512.626	-83.578	0.	0.
41	2.58036	SLV9-NL	NonStatic	Max	-512.627	-77.983	0.	0.
41	3.01042	SLV9-NL	NonStatic	Max	-501.575	-46.619	0.	0.
41	0.	SLV9-NL	NonStatic	Min	-598.008	-329.234	0.	0.
41	0.43006	SLV9-NL	NonStatic	Min	-581.507	-288.137	0.	0.
41	0.43006	SLV9-NL	NonStatic	Min	-581.507	-284.152	0.	0.
41	0.86012	SLV9-NL	NonStatic	Min	-565.914	-244.677	0.	0.
41	0.86012	SLV9-NL	NonStatic	Min	-565.915	-240.315	0.	0.
41	1.29018	SLV9-NL	NonStatic	Min	-551.23	-202.463	0.	0.
41	1.29018	SLV9-NL	NonStatic	Min	-551.23	-197.754	0.	0.
41	1.50521	SLV9-NL	NonStatic	Min	-544.228	-179.436	0.	0.
41	1.72024	SLV9-NL	NonStatic	Min	-537.454	-161.524	0.	0.

Table: Element Forces - Frames, Part 1 of 2

Frame	Station	OutputCase	CaseType	StepType	P	V2	V3	T
	m				KN	KN	KN	KN-m
41	1.72024	SLV9-NL	NonStatic	Min	-537.454	-156.495	0.	0.
41	2.1503	SLV9-NL	NonStatic	Min	-524.586	-121.887	0.	0.
41	2.1503	SLV9-NL	NonStatic	Min	-524.586	-116.564	0.	0.
41	2.58036	SLV9-NL	NonStatic	Min	-512.626	-83.578	0.	0.
41	2.58036	SLV9-NL	NonStatic	Min	-512.627	-77.983	0.	0.
41	3.01042	SLV9-NL	NonStatic	Min	-501.575	-46.619	0.	0.
41	0.	SLV10-NL	NonStatic	Max	-590.972	-273.649	0.	0.
41	0.43006	SLV10-NL	NonStatic	Max	-574.47	-235.685	0.	0.
41	0.43006	SLV10-NL	NonStatic	Max	-574.47	-235.685	0.	0.
41	0.86012	SLV10-NL	NonStatic	Max	-558.877	-199.171	0.	0.
41	0.86012	SLV10-NL	NonStatic	Max	-558.877	-199.171	0.	0.
41	1.29018	SLV10-NL	NonStatic	Max	-544.192	-164.106	0.	0.
41	1.29018	SLV10-NL	NonStatic	Max	-544.192	-164.106	0.	0.
41	1.50521	SLV10-NL	NonStatic	Max	-537.19	-147.118	0.	0.
41	1.72024	SLV10-NL	NonStatic	Max	-530.415	-130.491	0.	0.
41	1.72024	SLV10-NL	NonStatic	Max	-530.415	-130.491	0.	0.
41	2.1503	SLV10-NL	NonStatic	Max	-517.547	-98.326	0.	0.
41	2.1503	SLV10-NL	NonStatic	Max	-517.547	-98.326	0.	0.
41	2.58036	SLV10-NL	NonStatic	Max	-505.587	-67.611	0.	0.
41	2.58036	SLV10-NL	NonStatic	Max	-505.587	-67.611	0.	0.
41	3.01042	SLV10-NL	NonStatic	Max	-494.535	-38.345	0.	0.
41	0.	SLV10-NL	NonStatic	Min	-590.972	-273.649	0.	0.
41	0.43006	SLV10-NL	NonStatic	Min	-574.47	-235.685	0.	0.
41	0.43006	SLV10-NL	NonStatic	Min	-574.47	-235.685	0.	0.
41	0.86012	SLV10-NL	NonStatic	Min	-558.877	-199.171	0.	0.
41	0.86012	SLV10-NL	NonStatic	Min	-558.877	-199.171	0.	0.
41	1.29018	SLV10-NL	NonStatic	Min	-544.192	-164.106	0.	0.
41	1.29018	SLV10-NL	NonStatic	Min	-544.192	-164.106	0.	0.
41	1.50521	SLV10-NL	NonStatic	Min	-537.19	-147.118	0.	0.
41	1.72024	SLV10-NL	NonStatic	Min	-530.415	-130.491	0.	0.
41	1.72024	SLV10-NL	NonStatic	Min	-530.415	-130.491	0.	0.
41	2.1503	SLV10-NL	NonStatic	Min	-517.547	-98.326	0.	0.
41	2.1503	SLV10-NL	NonStatic	Min	-517.547	-98.326	0.	0.
41	2.58036	SLV10-NL	NonStatic	Min	-505.587	-67.611	0.	0.
41	2.58036	SLV10-NL	NonStatic	Min	-505.587	-67.611	0.	0.
41	3.01042	SLV10-NL	NonStatic	Min	-494.535	-38.345	0.	0.
41	0.	SLV11-NL	NonStatic	Max	-613.923	-329.749	0.	0.
41	0.43006	SLV11-NL	NonStatic	Max	-596.951	-288.652	0.	0.
41	0.43006	SLV11-NL	NonStatic	Max	-596.952	-284.694	0.	0.
41	0.86012	SLV11-NL	NonStatic	Max	-580.915	-245.219	0.	0.
41	0.86012	SLV11-NL	NonStatic	Max	-580.915	-240.872	0.	0.
41	1.29018	SLV11-NL	NonStatic	Max	-565.812	-203.02	0.	0.
41	1.29018	SLV11-NL	NonStatic	Max	-565.813	-198.315	0.	0.
41	1.50521	SLV11-NL	NonStatic	Max	-558.611	-179.997	0.	0.
41	1.72024	SLV11-NL	NonStatic	Max	-551.644	-162.085	0.	0.
41	1.72024	SLV11-NL	NonStatic	Max	-551.644	-157.052	0.	0.
41	2.1503	SLV11-NL	NonStatic	Max	-538.409	-122.443	0.	0.
41	2.1503	SLV11-NL	NonStatic	Max	-538.41	-117.107	0.	0.
41	2.58036	SLV11-NL	NonStatic	Max	-526.109	-84.121	0.	0.
41	2.58036	SLV11-NL	NonStatic	Max	-526.11	-78.508	0.	0.
41	3.01042	SLV11-NL	NonStatic	Max	-514.744	-47.144	0.	0.
41	0.	SLV11-NL	NonStatic	Min	-613.923	-329.749	0.	0.
41	0.43006	SLV11-NL	NonStatic	Min	-596.951	-288.652	0.	0.
41	0.43006	SLV11-NL	NonStatic	Min	-596.952	-284.694	0.	0.

Table: Element Forces - Frames, Part 1 of 2

Frame	Station	OutputCase	CaseType	StepType	P	V2	V3	T
	m				KN	KN	KN	KN-m
41	0.86012	SLV11-NL	NonStatic	Min	-580.915	-245.219	0.	0.
41	0.86012	SLV11-NL	NonStatic	Min	-580.915	-240.872	0.	0.
41	1.29018	SLV11-NL	NonStatic	Min	-565.812	-203.02	0.	0.
41	1.29018	SLV11-NL	NonStatic	Min	-565.813	-198.315	0.	0.
41	1.50521	SLV11-NL	NonStatic	Min	-558.611	-179.997	0.	0.
41	1.72024	SLV11-NL	NonStatic	Min	-551.644	-162.085	0.	0.
41	1.72024	SLV11-NL	NonStatic	Min	-551.644	-157.052	0.	0.
41	2.1503	SLV11-NL	NonStatic	Min	-538.409	-122.443	0.	0.
41	2.1503	SLV11-NL	NonStatic	Min	-538.41	-117.107	0.	0.
41	2.58036	SLV11-NL	NonStatic	Min	-526.109	-84.121	0.	0.
41	2.58036	SLV11-NL	NonStatic	Min	-526.11	-78.508	0.	0.
41	3.01042	SLV11-NL	NonStatic	Min	-514.744	-47.144	0.	0.
41	0.	SLV12-NL	NonStatic	Max	-606.908	-274.111	0.	0.
41	0.43006	SLV12-NL	NonStatic	Max	-589.937	-236.147	0.	0.
41	0.43006	SLV12-NL	NonStatic	Max	-589.937	-236.147	0.	0.
41	0.86012	SLV12-NL	NonStatic	Max	-573.899	-199.633	0.	0.
41	0.86012	SLV12-NL	NonStatic	Max	-573.899	-199.633	0.	0.
41	1.29018	SLV12-NL	NonStatic	Max	-558.796	-164.569	0.	0.
41	1.29018	SLV12-NL	NonStatic	Max	-558.796	-164.569	0.	0.
41	1.50521	SLV12-NL	NonStatic	Max	-551.595	-147.58	0.	0.
41	1.72024	SLV12-NL	NonStatic	Max	-544.627	-130.954	0.	0.
41	1.72024	SLV12-NL	NonStatic	Max	-544.627	-130.954	0.	0.
41	2.1503	SLV12-NL	NonStatic	Max	-531.392	-98.789	0.	0.
41	2.1503	SLV12-NL	NonStatic	Max	-531.392	-98.789	0.	0.
41	2.58036	SLV12-NL	NonStatic	Max	-519.092	-68.073	0.	0.
41	2.58036	SLV12-NL	NonStatic	Max	-519.092	-68.073	0.	0.
41	3.01042	SLV12-NL	NonStatic	Max	-507.725	-38.808	0.	0.
41	0.	SLV12-NL	NonStatic	Min	-606.908	-274.111	0.	0.
41	0.43006	SLV12-NL	NonStatic	Min	-589.937	-236.147	0.	0.
41	0.43006	SLV12-NL	NonStatic	Min	-589.937	-236.147	0.	0.
41	0.86012	SLV12-NL	NonStatic	Min	-573.899	-199.633	0.	0.
41	0.86012	SLV12-NL	NonStatic	Min	-573.899	-199.633	0.	0.
41	1.29018	SLV12-NL	NonStatic	Min	-558.796	-164.569	0.	0.
41	1.29018	SLV12-NL	NonStatic	Min	-558.796	-164.569	0.	0.
41	1.50521	SLV12-NL	NonStatic	Min	-551.595	-147.58	0.	0.
41	1.72024	SLV12-NL	NonStatic	Min	-544.627	-130.954	0.	0.
41	1.72024	SLV12-NL	NonStatic	Min	-544.627	-130.954	0.	0.
41	2.1503	SLV12-NL	NonStatic	Min	-531.392	-98.789	0.	0.
41	2.1503	SLV12-NL	NonStatic	Min	-531.392	-98.789	0.	0.
41	2.58036	SLV12-NL	NonStatic	Min	-519.092	-68.073	0.	0.
41	2.58036	SLV12-NL	NonStatic	Min	-519.092	-68.073	0.	0.
41	3.01042	SLV12-NL	NonStatic	Min	-507.725	-38.808	0.	0.
41	0.	SLV13-NL	NonStatic	Max	-576.845	-295.54	0.	0.
41	0.43006	SLV13-NL	NonStatic	Max	-560.892	-255.539	0.	0.
41	0.43006	SLV13-NL	NonStatic	Max	-560.892	-254.59	0.	0.
41	0.86012	SLV13-NL	NonStatic	Max	-545.817	-216.151	0.	0.
41	0.86012	SLV13-NL	NonStatic	Max	-545.817	-214.965	0.	0.
41	1.29018	SLV13-NL	NonStatic	Max	-531.62	-178.088	0.	0.
41	1.29018	SLV13-NL	NonStatic	Max	-531.62	-176.696	0.	0.
41	1.50521	SLV13-NL	NonStatic	Max	-524.851	-158.844	0.	0.
41	1.72024	SLV13-NL	NonStatic	Max	-518.301	-141.381	0.	0.
41	1.72024	SLV13-NL	NonStatic	Max	-518.301	-139.812	0.	0.
41	2.1503	SLV13-NL	NonStatic	Max	-505.86	-106.059	0.	0.
41	2.1503	SLV13-NL	NonStatic	Max	-505.86	-104.341	0.	0.

Table: Element Forces - Frames, Part 1 of 2

Frame	Station	OutputCase	CaseType	StepType	P	V2	V3	T
	m				KN	KN	KN	KN-m
41	2.58036	SLV13-NL	NonStatic	Max	-494.298	-72.15	0.	0.
41	2.58036	SLV13-NL	NonStatic	Max	-494.298	-70.311	0.	0.
41	3.01042	SLV13-NL	NonStatic	Max	-483.614	-39.682	0.	0.
41	0.	SLV13-NL	NonStatic	Min	-576.845	-295.54	0.	0.
41	0.43006	SLV13-NL	NonStatic	Min	-560.892	-255.539	0.	0.
41	0.43006	SLV13-NL	NonStatic	Min	-560.892	-254.59	0.	0.
41	0.86012	SLV13-NL	NonStatic	Min	-545.817	-216.151	0.	0.
41	0.86012	SLV13-NL	NonStatic	Min	-545.817	-214.965	0.	0.
41	1.29018	SLV13-NL	NonStatic	Min	-531.62	-178.088	0.	0.
41	1.29018	SLV13-NL	NonStatic	Min	-531.62	-176.696	0.	0.
41	1.50521	SLV13-NL	NonStatic	Min	-524.851	-158.844	0.	0.
41	1.72024	SLV13-NL	NonStatic	Min	-518.301	-141.381	0.	0.
41	1.72024	SLV13-NL	NonStatic	Min	-518.301	-139.812	0.	0.
41	2.1503	SLV13-NL	NonStatic	Min	-505.86	-106.059	0.	0.
41	2.1503	SLV13-NL	NonStatic	Min	-505.86	-104.341	0.	0.
41	2.58036	SLV13-NL	NonStatic	Min	-494.298	-72.15	0.	0.
41	2.58036	SLV13-NL	NonStatic	Min	-494.298	-70.311	0.	0.
41	3.01042	SLV13-NL	NonStatic	Min	-483.614	-39.682	0.	0.
41	0.	SLV14-NL	NonStatic	Max	-574.945	-278.93	0.	0.
41	0.43006	SLV14-NL	NonStatic	Max	-558.992	-239.869	0.	0.
41	0.43006	SLV14-NL	NonStatic	Max	-558.992	-239.869	0.	0.
41	0.86012	SLV14-NL	NonStatic	Max	-543.916	-202.319	0.	0.
41	0.86012	SLV14-NL	NonStatic	Max	-543.916	-202.319	0.	0.
41	1.29018	SLV14-NL	NonStatic	Max	-529.719	-166.279	0.	0.
41	1.29018	SLV14-NL	NonStatic	Max	-529.719	-166.189	0.	0.
41	1.50521	SLV14-NL	NonStatic	Max	-522.95	-148.735	0.	0.
41	1.72024	SLV14-NL	NonStatic	Max	-516.4	-131.659	0.	0.
41	1.72024	SLV14-NL	NonStatic	Max	-516.4	-131.508	0.	0.
41	2.1503	SLV14-NL	NonStatic	Max	-503.96	-98.488	0.	0.
41	2.1503	SLV14-NL	NonStatic	Max	-503.96	-98.307	0.	0.
41	2.58036	SLV14-NL	NonStatic	Max	-492.397	-66.797	0.	0.
41	2.58036	SLV14-NL	NonStatic	Max	-492.397	-66.618	0.	0.
41	3.01042	SLV14-NL	NonStatic	Max	-481.713	-36.618	0.	0.
41	0.	SLV14-NL	NonStatic	Min	-574.945	-278.93	0.	0.
41	0.43006	SLV14-NL	NonStatic	Min	-558.992	-239.869	0.	0.
41	0.43006	SLV14-NL	NonStatic	Min	-558.992	-239.869	0.	0.
41	0.86012	SLV14-NL	NonStatic	Min	-543.916	-202.319	0.	0.
41	0.86012	SLV14-NL	NonStatic	Min	-543.916	-202.319	0.	0.
41	1.29018	SLV14-NL	NonStatic	Min	-529.719	-166.279	0.	0.
41	1.29018	SLV14-NL	NonStatic	Min	-529.719	-166.189	0.	0.
41	1.50521	SLV14-NL	NonStatic	Min	-522.95	-148.735	0.	0.
41	1.72024	SLV14-NL	NonStatic	Min	-516.4	-131.659	0.	0.
41	1.72024	SLV14-NL	NonStatic	Min	-516.4	-131.508	0.	0.
41	2.1503	SLV14-NL	NonStatic	Min	-503.96	-98.488	0.	0.
41	2.1503	SLV14-NL	NonStatic	Min	-503.96	-98.307	0.	0.
41	2.58036	SLV14-NL	NonStatic	Min	-492.397	-66.797	0.	0.
41	2.58036	SLV14-NL	NonStatic	Min	-492.397	-66.618	0.	0.
41	3.01042	SLV14-NL	NonStatic	Min	-481.713	-36.618	0.	0.
41	0.	SLV15-NL	NonStatic	Max	-629.853	-298.192	0.	0.
41	0.43006	SLV15-NL	NonStatic	Max	-612.333	-258.191	0.	0.
41	0.43006	SLV15-NL	NonStatic	Max	-612.333	-257.184	0.	0.
41	0.86012	SLV15-NL	NonStatic	Max	-595.777	-218.746	0.	0.
41	0.86012	SLV15-NL	NonStatic	Max	-595.777	-217.468	0.	0.
41	1.29018	SLV15-NL	NonStatic	Max	-580.186	-180.591	0.	0.

Table: Element Forces - Frames, Part 1 of 2

Frame	Station	OutputCase	CaseType	StepType	P	V2	V3	T
	m				KN	KN	KN	KN-m
41	1.29018	SLV15-NL	NonStatic	Max	-580.186	-179.077	0.	0.
41	1.50521	SLV15-NL	NonStatic	Max	-572.752	-161.224	0.	0.
41	1.72024	SLV15-NL	NonStatic	Max	-565.56	-143.762	0.	0.
41	1.72024	SLV15-NL	NonStatic	Max	-565.56	-142.046	0.	0.
41	2.1503	SLV15-NL	NonStatic	Max	-551.897	-108.292	0.	0.
41	2.1503	SLV15-NL	NonStatic	Max	-551.897	-106.408	0.	0.
41	2.58036	SLV15-NL	NonStatic	Max	-539.199	-74.216	0.	0.
41	2.58036	SLV15-NL	NonStatic	Max	-539.2	-72.198	0.	0.
41	3.01042	SLV15-NL	NonStatic	Max	-527.466	-41.569	0.	0.
41	0.	SLV15-NL	NonStatic	Min	-629.853	-298.192	0.	0.
41	0.43006	SLV15-NL	NonStatic	Min	-612.333	-258.191	0.	0.
41	0.43006	SLV15-NL	NonStatic	Min	-612.333	-257.184	0.	0.
41	0.86012	SLV15-NL	NonStatic	Min	-595.777	-218.746	0.	0.
41	0.86012	SLV15-NL	NonStatic	Min	-595.777	-217.468	0.	0.
41	1.29018	SLV15-NL	NonStatic	Min	-580.186	-180.591	0.	0.
41	1.29018	SLV15-NL	NonStatic	Min	-580.186	-179.077	0.	0.
41	1.50521	SLV15-NL	NonStatic	Min	-572.752	-161.224	0.	0.
41	1.72024	SLV15-NL	NonStatic	Min	-565.56	-143.762	0.	0.
41	1.72024	SLV15-NL	NonStatic	Min	-565.56	-142.046	0.	0.
41	2.1503	SLV15-NL	NonStatic	Min	-551.897	-108.292	0.	0.
41	2.1503	SLV15-NL	NonStatic	Min	-551.897	-106.408	0.	0.
41	2.58036	SLV15-NL	NonStatic	Min	-539.199	-74.216	0.	0.
41	2.58036	SLV15-NL	NonStatic	Min	-539.2	-72.198	0.	0.
41	3.01042	SLV15-NL	NonStatic	Min	-527.466	-41.569	0.	0.
41	0.	SLV16-NL	NonStatic	Max	-628.098	-281.769	0.	0.
41	0.43006	SLV16-NL	NonStatic	Max	-610.578	-242.708	0.	0.
41	0.43006	SLV16-NL	NonStatic	Max	-610.578	-242.708	0.	0.
41	0.86012	SLV16-NL	NonStatic	Max	-594.023	-205.158	0.	0.
41	0.86012	SLV16-NL	NonStatic	Max	-594.023	-205.013	0.	0.
41	1.29018	SLV16-NL	NonStatic	Max	-578.431	-168.972	0.	0.
41	1.29018	SLV16-NL	NonStatic	Max	-578.431	-168.695	0.	0.
41	1.50521	SLV16-NL	NonStatic	Max	-570.997	-151.241	0.	0.
41	1.72024	SLV16-NL	NonStatic	Max	-563.805	-134.165	0.	0.
41	1.72024	SLV16-NL	NonStatic	Max	-563.805	-133.79	0.	0.
41	2.1503	SLV16-NL	NonStatic	Max	-550.142	-100.77	0.	0.
41	2.1503	SLV16-NL	NonStatic	Max	-550.142	-100.335	0.	0.
41	2.58036	SLV16-NL	NonStatic	Max	-537.444	-68.825	0.	0.
41	2.58036	SLV16-NL	NonStatic	Max	-537.444	-68.369	0.	0.
41	3.01042	SLV16-NL	NonStatic	Max	-525.711	-38.369	0.	0.
41	0.	SLV16-NL	NonStatic	Min	-628.098	-281.769	0.	0.
41	0.43006	SLV16-NL	NonStatic	Min	-610.578	-242.708	0.	0.
41	0.43006	SLV16-NL	NonStatic	Min	-610.578	-242.708	0.	0.
41	0.86012	SLV16-NL	NonStatic	Min	-594.023	-205.158	0.	0.
41	0.86012	SLV16-NL	NonStatic	Min	-594.023	-205.013	0.	0.
41	1.29018	SLV16-NL	NonStatic	Min	-578.431	-168.972	0.	0.
41	1.29018	SLV16-NL	NonStatic	Min	-578.431	-168.695	0.	0.
41	1.50521	SLV16-NL	NonStatic	Min	-570.997	-151.241	0.	0.
41	1.72024	SLV16-NL	NonStatic	Min	-563.805	-134.165	0.	0.
41	1.72024	SLV16-NL	NonStatic	Min	-563.805	-133.79	0.	0.
41	2.1503	SLV16-NL	NonStatic	Min	-550.142	-100.77	0.	0.
41	2.1503	SLV16-NL	NonStatic	Min	-550.142	-100.335	0.	0.
41	2.58036	SLV16-NL	NonStatic	Min	-537.444	-68.825	0.	0.
41	2.58036	SLV16-NL	NonStatic	Min	-537.444	-68.369	0.	0.
41	3.01042	SLV16-NL	NonStatic	Min	-525.711	-38.369	0.	0.

Table: Element Forces - Frames, Part 1 of 2

Frame	Station	OutputCase	CaseType	StepType	P	V2	V3	T
	m				KN	KN	KN	KN-m
42	0.	SLU 1-NL	NonStatic	Max	-754.512	-50.093	0.	0.
42	0.4734	SLU 1-NL	NonStatic	Max	-738.362	-4.091	0.	0.
42	0.4734	SLU 1-NL	NonStatic	Max	-738.362	-2.146	0.	0.
42	0.94681	SLU 1-NL	NonStatic	Max	-720.674	41.291	0.	0.
42	0.94681	SLU 1-NL	NonStatic	Max	-720.674	43.16	0.	0.
42	1.42021	SLU 1-NL	NonStatic	Max	-701.447	84.033	0.	0.
42	1.42021	SLU 1-NL	NonStatic	Max	-701.447	85.78	0.	0.
42	1.89361	SLU 1-NL	NonStatic	Max	-680.683	124.088	0.	0.
42	1.89361	SLU 1-NL	NonStatic	Max	-680.683	125.669	0.	0.
42	2.36702	SLU 1-NL	NonStatic	Max	-658.38	161.413	0.	0.
42	2.36702	SLU 1-NL	NonStatic	Max	-658.38	162.789	0.	0.
42	2.84042	SLU 1-NL	NonStatic	Max	-634.539	195.969	0.	0.
42	0.	SLU 1-NL	NonStatic	Min	-754.512	-50.093	0.	0.
42	0.4734	SLU 1-NL	NonStatic	Min	-738.362	-4.091	0.	0.
42	0.4734	SLU 1-NL	NonStatic	Min	-738.362	-2.146	0.	0.
42	0.94681	SLU 1-NL	NonStatic	Min	-720.674	41.291	0.	0.
42	0.94681	SLU 1-NL	NonStatic	Min	-720.674	43.16	0.	0.
42	1.42021	SLU 1-NL	NonStatic	Min	-701.447	84.033	0.	0.
42	1.42021	SLU 1-NL	NonStatic	Min	-701.447	85.78	0.	0.
42	1.89361	SLU 1-NL	NonStatic	Min	-680.683	124.088	0.	0.
42	1.89361	SLU 1-NL	NonStatic	Min	-680.683	125.669	0.	0.
42	2.36702	SLU 1-NL	NonStatic	Min	-658.38	161.413	0.	0.
42	2.36702	SLU 1-NL	NonStatic	Min	-658.38	162.789	0.	0.
42	2.84042	SLU 1-NL	NonStatic	Min	-634.539	195.969	0.	0.
42	0.	SLU 2-NL	NonStatic	Max	-754.513	-38.377	0.	0.
42	0.4734	SLU 2-NL	NonStatic	Max	-738.363	-7.645	0.	0.
42	0.4734	SLU 2-NL	NonStatic	Max	-738.362	-4.791	0.	0.
42	0.94681	SLU 2-NL	NonStatic	Max	-720.674	23.968	0.	0.
42	0.94681	SLU 2-NL	NonStatic	Max	-720.674	26.709	0.	0.
42	1.42021	SLU 2-NL	NonStatic	Max	-701.448	53.495	0.	0.
42	1.42021	SLU 2-NL	NonStatic	Max	-701.448	56.045	0.	0.
42	1.89361	SLU 2-NL	NonStatic	Max	-680.683	80.859	0.	0.
42	1.89361	SLU 2-NL	NonStatic	Max	-680.683	83.153	0.	0.
42	2.36702	SLU 2-NL	NonStatic	Max	-658.38	105.995	0.	0.
42	2.36702	SLU 2-NL	NonStatic	Max	-658.38	107.98	0.	0.
42	2.84042	SLU 2-NL	NonStatic	Max	-634.54	128.849	0.	0.
42	0.	SLU 2-NL	NonStatic	Min	-754.513	-38.377	0.	0.
42	0.4734	SLU 2-NL	NonStatic	Min	-738.363	-7.645	0.	0.
42	0.4734	SLU 2-NL	NonStatic	Min	-738.362	-4.791	0.	0.
42	0.94681	SLU 2-NL	NonStatic	Min	-720.674	23.968	0.	0.
42	0.94681	SLU 2-NL	NonStatic	Min	-720.674	26.709	0.	0.
42	1.42021	SLU 2-NL	NonStatic	Min	-701.448	53.495	0.	0.
42	1.42021	SLU 2-NL	NonStatic	Min	-701.448	56.045	0.	0.
42	1.89361	SLU 2-NL	NonStatic	Min	-680.683	80.859	0.	0.
42	1.89361	SLU 2-NL	NonStatic	Min	-680.683	83.153	0.	0.
42	2.36702	SLU 2-NL	NonStatic	Min	-658.38	105.995	0.	0.
42	2.36702	SLU 2-NL	NonStatic	Min	-658.38	107.98	0.	0.
42	2.84042	SLU 2-NL	NonStatic	Min	-634.54	128.849	0.	0.
42	0.	SLU 3-NL	NonStatic	Max	-488.713	-49.211	0.	0.
42	0.4734	SLU 3-NL	NonStatic	Max	-476.29	-3.209	0.	0.
42	0.4734	SLU 3-NL	NonStatic	Max	-476.29	-2.927	0.	0.
42	0.94681	SLU 3-NL	NonStatic	Max	-462.683	40.51	0.	0.
42	0.94681	SLU 3-NL	NonStatic	Max	-462.683	40.781	0.	0.
42	1.42021	SLU 3-NL	NonStatic	Max	-447.894	81.654	0.	0.

Table: Element Forces - Frames, Part 1 of 2

Frame	Station	OutputCase	CaseType	StepType	P	V2	V3	T
	m				KN	KN	KN	KN-m
42	1.42021	SLU 3-NL	NonStatic	Max	-447.894	81.915	0.	0.
42	1.89361	SLU 3-NL	NonStatic	Max	-431.921	120.224	0.	0.
42	1.89361	SLU 3-NL	NonStatic	Max	-431.921	120.473	0.	0.
42	2.36702	SLU 3-NL	NonStatic	Max	-414.765	156.217	0.	0.
42	2.36702	SLU 3-NL	NonStatic	Max	-414.765	156.444	0.	0.
42	2.84042	SLU 3-NL	NonStatic	Max	-396.427	189.624	0.	0.
42	0.	SLU 3-NL	NonStatic	Min	-488.713	-49.211	0.	0.
42	0.4734	SLU 3-NL	NonStatic	Min	-476.29	-3.209	0.	0.
42	0.4734	SLU 3-NL	NonStatic	Min	-476.29	-2.927	0.	0.
42	0.94681	SLU 3-NL	NonStatic	Min	-462.683	40.51	0.	0.
42	0.94681	SLU 3-NL	NonStatic	Min	-462.683	40.781	0.	0.
42	1.42021	SLU 3-NL	NonStatic	Min	-447.894	81.654	0.	0.
42	1.42021	SLU 3-NL	NonStatic	Min	-447.894	81.915	0.	0.
42	1.89361	SLU 3-NL	NonStatic	Min	-431.921	120.224	0.	0.
42	1.89361	SLU 3-NL	NonStatic	Min	-431.921	120.473	0.	0.
42	2.36702	SLU 3-NL	NonStatic	Min	-414.765	156.217	0.	0.
42	2.36702	SLU 3-NL	NonStatic	Min	-414.765	156.444	0.	0.
42	2.84042	SLU 3-NL	NonStatic	Min	-396.427	189.624	0.	0.
42	0.	SLU 4-NL	NonStatic	Max	-763.356	-40.928	0.	0.
42	0.4734	SLU 4-NL	NonStatic	Max	-747.206	-10.197	0.	0.
42	0.4734	SLU 4-NL	NonStatic	Max	-747.208	8.67	0.	0.
42	0.94681	SLU 4-NL	NonStatic	Max	-729.519	37.43	0.	0.
42	0.94681	SLU 4-NL	NonStatic	Max	-729.521	56.573	0.	0.
42	1.42021	SLU 4-NL	NonStatic	Max	-710.294	83.36	0.	0.
42	1.42021	SLU 4-NL	NonStatic	Max	-710.295	102.731	0.	0.
42	1.89361	SLU 4-NL	NonStatic	Max	-689.531	127.546	0.	0.
42	1.89361	SLU 4-NL	NonStatic	Max	-689.532	147.103	0.	0.
42	2.36702	SLU 4-NL	NonStatic	Max	-667.229	169.945	0.	0.
42	2.36702	SLU 4-NL	NonStatic	Max	-667.23	189.65	0.	0.
42	2.84042	SLU 4-NL	NonStatic	Max	-643.389	210.519	0.	0.
42	0.	SLU 4-NL	NonStatic	Min	-763.356	-40.928	0.	0.
42	0.4734	SLU 4-NL	NonStatic	Min	-747.206	-10.197	0.	0.
42	0.4734	SLU 4-NL	NonStatic	Min	-747.208	8.67	0.	0.
42	0.94681	SLU 4-NL	NonStatic	Min	-729.519	37.43	0.	0.
42	0.94681	SLU 4-NL	NonStatic	Min	-729.521	56.573	0.	0.
42	1.42021	SLU 4-NL	NonStatic	Min	-710.294	83.36	0.	0.
42	1.42021	SLU 4-NL	NonStatic	Min	-710.295	102.731	0.	0.
42	1.89361	SLU 4-NL	NonStatic	Min	-689.531	127.546	0.	0.
42	1.89361	SLU 4-NL	NonStatic	Min	-689.532	147.103	0.	0.
42	2.36702	SLU 4-NL	NonStatic	Min	-667.229	169.945	0.	0.
42	2.36702	SLU 4-NL	NonStatic	Min	-667.23	189.65	0.	0.
42	2.84042	SLU 4-NL	NonStatic	Min	-643.389	210.519	0.	0.
42	0.	SLU 5-NL	NonStatic	Max	-497.827	-40.305	0.	0.
42	0.4734	SLU 5-NL	NonStatic	Max	-485.403	-9.573	0.	0.
42	0.4734	SLU 5-NL	NonStatic	Max	-485.405	8.841	0.	0.
42	0.94681	SLU 5-NL	NonStatic	Max	-471.799	37.6	0.	0.
42	0.94681	SLU 5-NL	NonStatic	Max	-471.801	56.366	0.	0.
42	1.42021	SLU 5-NL	NonStatic	Max	-457.011	83.153	0.	0.
42	1.42021	SLU 5-NL	NonStatic	Max	-457.013	102.274	0.	0.
42	1.89361	SLU 5-NL	NonStatic	Max	-441.04	127.088	0.	0.
42	1.89361	SLU 5-NL	NonStatic	Max	-441.042	146.563	0.	0.
42	2.36702	SLU 5-NL	NonStatic	Max	-423.887	169.404	0.	0.
42	2.36702	SLU 5-NL	NonStatic	Max	-423.888	189.225	0.	0.
42	2.84042	SLU 5-NL	NonStatic	Max	-405.549	210.094	0.	0.

Table: Element Forces - Frames, Part 1 of 2

Frame	Station	OutputCase	CaseType	StepType	P	V2	V3	T
	m				KN	KN	KN	KN-m
42	0.	SLU 5-NL	NonStatic	Min	-497.827	-40.305	0.	0.
42	0.4734	SLU 5-NL	NonStatic	Min	-485.403	-9.573	0.	0.
42	0.4734	SLU 5-NL	NonStatic	Min	-485.405	8.841	0.	0.
42	0.94681	SLU 5-NL	NonStatic	Min	-471.799	37.6	0.	0.
42	0.94681	SLU 5-NL	NonStatic	Min	-471.801	56.366	0.	0.
42	1.42021	SLU 5-NL	NonStatic	Min	-457.011	83.153	0.	0.
42	1.42021	SLU 5-NL	NonStatic	Min	-457.013	102.274	0.	0.
42	1.89361	SLU 5-NL	NonStatic	Min	-441.04	127.088	0.	0.
42	1.89361	SLU 5-NL	NonStatic	Min	-441.042	146.563	0.	0.
42	2.36702	SLU 5-NL	NonStatic	Min	-423.887	169.404	0.	0.
42	2.36702	SLU 5-NL	NonStatic	Min	-423.888	189.225	0.	0.
42	2.84042	SLU 5-NL	NonStatic	Min	-405.549	210.094	0.	0.
42	0.	SLU 6-NL	NonStatic	Max	-745.662	-55.629	0.	0.
42	0.4734	SLU 6-NL	NonStatic	Max	-729.512	-9.628	0.	0.
42	0.4734	SLU 6-NL	NonStatic	Max	-729.512	-9.628	0.	0.
42	0.94681	SLU 6-NL	NonStatic	Max	-711.824	33.809	0.	0.
42	0.94681	SLU 6-NL	NonStatic	Max	-711.824	33.809	0.	0.
42	1.42021	SLU 6-NL	NonStatic	Max	-692.597	74.682	0.	0.
42	1.42021	SLU 6-NL	NonStatic	Max	-692.597	74.682	0.	0.
42	1.89361	SLU 6-NL	NonStatic	Max	-671.833	112.991	0.	0.
42	1.89361	SLU 6-NL	NonStatic	Max	-671.833	112.991	0.	0.
42	2.36702	SLU 6-NL	NonStatic	Max	-649.53	148.735	0.	0.
42	2.36702	SLU 6-NL	NonStatic	Max	-649.53	148.735	0.	0.
42	2.84042	SLU 6-NL	NonStatic	Max	-625.69	181.915	0.	0.
42	0.	SLU 6-NL	NonStatic	Min	-745.662	-55.629	0.	0.
42	0.4734	SLU 6-NL	NonStatic	Min	-729.512	-9.628	0.	0.
42	0.4734	SLU 6-NL	NonStatic	Min	-729.512	-9.628	0.	0.
42	0.94681	SLU 6-NL	NonStatic	Min	-711.824	33.809	0.	0.
42	0.94681	SLU 6-NL	NonStatic	Min	-711.824	33.809	0.	0.
42	1.42021	SLU 6-NL	NonStatic	Min	-692.597	74.682	0.	0.
42	1.42021	SLU 6-NL	NonStatic	Min	-692.597	74.682	0.	0.
42	1.89361	SLU 6-NL	NonStatic	Min	-671.833	112.991	0.	0.
42	1.89361	SLU 6-NL	NonStatic	Min	-671.833	112.991	0.	0.
42	2.36702	SLU 6-NL	NonStatic	Min	-649.53	148.735	0.	0.
42	2.36702	SLU 6-NL	NonStatic	Min	-649.53	148.735	0.	0.
42	2.84042	SLU 6-NL	NonStatic	Min	-625.69	181.915	0.	0.
42	0.	SLU 7-NL	NonStatic	Max	-479.589	-55.883	0.	0.
42	0.4734	SLU 7-NL	NonStatic	Max	-467.166	-9.882	0.	0.
42	0.4734	SLU 7-NL	NonStatic	Max	-467.166	-9.882	0.	0.
42	0.94681	SLU 7-NL	NonStatic	Max	-453.56	33.555	0.	0.
42	0.94681	SLU 7-NL	NonStatic	Max	-453.56	33.555	0.	0.
42	1.42021	SLU 7-NL	NonStatic	Max	-438.77	74.428	0.	0.
42	1.42021	SLU 7-NL	NonStatic	Max	-438.77	74.428	0.	0.
42	1.89361	SLU 7-NL	NonStatic	Max	-422.798	112.736	0.	0.
42	1.89361	SLU 7-NL	NonStatic	Max	-422.798	112.736	0.	0.
42	2.36702	SLU 7-NL	NonStatic	Max	-405.642	148.481	0.	0.
42	2.36702	SLU 7-NL	NonStatic	Max	-405.642	148.481	0.	0.
42	2.84042	SLU 7-NL	NonStatic	Max	-387.303	181.661	0.	0.
42	0.	SLU 7-NL	NonStatic	Min	-479.589	-55.883	0.	0.
42	0.4734	SLU 7-NL	NonStatic	Min	-467.166	-9.882	0.	0.
42	0.4734	SLU 7-NL	NonStatic	Min	-467.166	-9.882	0.	0.
42	0.94681	SLU 7-NL	NonStatic	Min	-453.56	33.555	0.	0.
42	0.94681	SLU 7-NL	NonStatic	Min	-453.56	33.555	0.	0.
42	1.42021	SLU 7-NL	NonStatic	Min	-438.77	74.428	0.	0.

Table: Element Forces - Frames, Part 1 of 2

Frame	Station	OutputCase	CaseType	StepType	P	V2	V3	T
	m				KN	KN	KN	KN-m
42	1.42021	SLU 7-NL	NonStatic	Min	-438.77	74.428	0.	0.
42	1.89361	SLU 7-NL	NonStatic	Min	-422.798	112.736	0.	0.
42	1.89361	SLU 7-NL	NonStatic	Min	-422.798	112.736	0.	0.
42	2.36702	SLU 7-NL	NonStatic	Min	-405.642	148.481	0.	0.
42	2.36702	SLU 7-NL	NonStatic	Min	-405.642	148.481	0.	0.
42	2.84042	SLU 7-NL	NonStatic	Min	-387.303	181.661	0.	0.
42	0.	SLE-C-NL	NonStatic	Max	-568.17	-38.43	0.	0.
42	0.4734	SLE-C-NL	NonStatic	Max	-555.747	-3.664	0.	0.
42	0.4734	SLE-C-NL	NonStatic	Max	-555.747	-2.209	0.	0.
42	0.94681	SLE-C-NL	NonStatic	Max	-542.14	30.584	0.	0.
42	0.94681	SLE-C-NL	NonStatic	Max	-542.14	31.983	0.	0.
42	1.42021	SLE-C-NL	NonStatic	Max	-527.351	62.803	0.	0.
42	1.42021	SLE-C-NL	NonStatic	Max	-527.351	64.109	0.	0.
42	1.89361	SLE-C-NL	NonStatic	Max	-511.378	92.957	0.	0.
42	1.89361	SLE-C-NL	NonStatic	Max	-511.378	94.139	0.	0.
42	2.36702	SLE-C-NL	NonStatic	Max	-494.222	121.014	0.	0.
42	2.36702	SLE-C-NL	NonStatic	Max	-494.222	122.043	0.	0.
42	2.84042	SLE-C-NL	NonStatic	Max	-475.883	146.946	0.	0.
42	0.	SLE-C-NL	NonStatic	Min	-568.17	-38.43	0.	0.
42	0.4734	SLE-C-NL	NonStatic	Min	-555.747	-3.664	0.	0.
42	0.4734	SLE-C-NL	NonStatic	Min	-555.747	-2.209	0.	0.
42	0.94681	SLE-C-NL	NonStatic	Min	-542.14	30.584	0.	0.
42	0.94681	SLE-C-NL	NonStatic	Min	-542.14	31.983	0.	0.
42	1.42021	SLE-C-NL	NonStatic	Min	-527.351	62.803	0.	0.
42	1.42021	SLE-C-NL	NonStatic	Min	-527.351	64.109	0.	0.
42	1.89361	SLE-C-NL	NonStatic	Min	-511.378	92.957	0.	0.
42	1.89361	SLE-C-NL	NonStatic	Min	-511.378	94.139	0.	0.
42	2.36702	SLE-C-NL	NonStatic	Min	-494.222	121.014	0.	0.
42	2.36702	SLE-C-NL	NonStatic	Min	-494.222	122.043	0.	0.
42	2.84042	SLE-C-NL	NonStatic	Min	-475.883	146.946	0.	0.
42	0.	SLE-F-1-NL	NonStatic	Max	-552.279	-34.474	0.	0.
42	0.4734	SLE-F-1-NL	NonStatic	Max	-539.855	-3.742	0.	0.
42	0.4734	SLE-F-1-NL	NonStatic	Max	-539.855	-2.143	0.	0.
42	0.94681	SLE-F-1-NL	NonStatic	Max	-526.249	26.616	0.	0.
42	0.94681	SLE-F-1-NL	NonStatic	Max	-526.249	28.153	0.	0.
42	1.42021	SLE-F-1-NL	NonStatic	Max	-511.459	54.94	0.	0.
42	1.42021	SLE-F-1-NL	NonStatic	Max	-511.459	56.374	0.	0.
42	1.89361	SLE-F-1-NL	NonStatic	Max	-495.487	81.188	0.	0.
42	1.89361	SLE-F-1-NL	NonStatic	Max	-495.487	82.483	0.	0.
42	2.36702	SLE-F-1-NL	NonStatic	Max	-478.331	105.325	0.	0.
42	2.36702	SLE-F-1-NL	NonStatic	Max	-478.331	106.45	0.	0.
42	2.84042	SLE-F-1-NL	NonStatic	Max	-459.992	127.32	0.	0.
42	0.	SLE-F-1-NL	NonStatic	Min	-552.279	-34.474	0.	0.
42	0.4734	SLE-F-1-NL	NonStatic	Min	-539.855	-3.742	0.	0.
42	0.4734	SLE-F-1-NL	NonStatic	Min	-539.855	-2.143	0.	0.
42	0.94681	SLE-F-1-NL	NonStatic	Min	-526.249	26.616	0.	0.
42	0.94681	SLE-F-1-NL	NonStatic	Min	-526.249	28.153	0.	0.
42	1.42021	SLE-F-1-NL	NonStatic	Min	-511.459	54.94	0.	0.
42	1.42021	SLE-F-1-NL	NonStatic	Min	-511.459	56.374	0.	0.
42	1.89361	SLE-F-1-NL	NonStatic	Min	-495.487	81.188	0.	0.
42	1.89361	SLE-F-1-NL	NonStatic	Min	-495.487	82.483	0.	0.
42	2.36702	SLE-F-1-NL	NonStatic	Min	-478.331	105.325	0.	0.
42	2.36702	SLE-F-1-NL	NonStatic	Min	-478.331	106.45	0.	0.
42	2.84042	SLE-F-1-NL	NonStatic	Min	-459.992	127.32	0.	0.

Table: Element Forces - Frames, Part 1 of 2

Frame	Station	OutputCase	CaseType	StepType	P	V2	V3	T
	m				KN	KN	KN	KN-m
42	0.	SLE-F-2-NL	NonStatic	Max	-491.725	-38.143	0.	0.
42	0.4734	SLE-F-2-NL	NonStatic	Max	-479.302	-7.411	0.	0.
42	0.4734	SLE-F-2-NL	NonStatic	Max	-479.302	-2.983	0.	0.
42	0.94681	SLE-F-2-NL	NonStatic	Max	-465.696	25.776	0.	0.
42	0.94681	SLE-F-2-NL	NonStatic	Max	-465.696	30.358	0.	0.
42	1.42021	SLE-F-2-NL	NonStatic	Max	-450.906	57.145	0.	0.
42	1.42021	SLE-F-2-NL	NonStatic	Max	-450.907	61.858	0.	0.
42	1.89361	SLE-F-2-NL	NonStatic	Max	-434.934	86.672	0.	0.
42	1.89361	SLE-F-2-NL	NonStatic	Max	-434.934	91.495	0.	0.
42	2.36702	SLE-F-2-NL	NonStatic	Max	-417.778	114.336	0.	0.
42	2.36702	SLE-F-2-NL	NonStatic	Max	-417.778	119.249	0.	0.
42	2.84042	SLE-F-2-NL	NonStatic	Max	-399.439	140.118	0.	0.
42	0.	SLE-F-2-NL	NonStatic	Min	-491.725	-38.143	0.	0.
42	0.4734	SLE-F-2-NL	NonStatic	Min	-479.302	-7.411	0.	0.
42	0.4734	SLE-F-2-NL	NonStatic	Min	-479.302	-2.983	0.	0.
42	0.94681	SLE-F-2-NL	NonStatic	Min	-465.696	25.776	0.	0.
42	0.94681	SLE-F-2-NL	NonStatic	Min	-465.696	30.358	0.	0.
42	1.42021	SLE-F-2-NL	NonStatic	Min	-450.906	57.145	0.	0.
42	1.42021	SLE-F-2-NL	NonStatic	Min	-450.907	61.858	0.	0.
42	1.89361	SLE-F-2-NL	NonStatic	Min	-434.934	86.672	0.	0.
42	1.89361	SLE-F-2-NL	NonStatic	Min	-434.934	91.495	0.	0.
42	2.36702	SLE-F-2-NL	NonStatic	Min	-417.778	114.336	0.	0.
42	2.36702	SLE-F-2-NL	NonStatic	Min	-417.778	119.249	0.	0.
42	2.84042	SLE-F-2-NL	NonStatic	Min	-399.439	140.118	0.	0.
42	0.	SLE-F-3-NL	NonStatic	Max	-485.7	-43.152	0.	0.
42	0.4734	SLE-F-3-NL	NonStatic	Max	-473.277	-9.194	0.	0.
42	0.4734	SLE-F-3-NL	NonStatic	Max	-473.277	-9.194	0.	0.
42	0.94681	SLE-F-3-NL	NonStatic	Max	-459.671	22.792	0.	0.
42	0.94681	SLE-F-3-NL	NonStatic	Max	-459.671	22.792	0.	0.
42	1.42021	SLE-F-3-NL	NonStatic	Max	-444.881	52.806	0.	0.
42	1.42021	SLE-F-3-NL	NonStatic	Max	-444.881	52.806	0.	0.
42	1.89361	SLE-F-3-NL	NonStatic	Max	-428.908	80.846	0.	0.
42	1.89361	SLE-F-3-NL	NonStatic	Max	-428.908	80.846	0.	0.
42	2.36702	SLE-F-3-NL	NonStatic	Max	-411.753	106.915	0.	0.
42	2.36702	SLE-F-3-NL	NonStatic	Max	-411.753	106.915	0.	0.
42	2.84042	SLE-F-3-NL	NonStatic	Max	-393.414	131.011	0.	0.
42	0.	SLE-F-3-NL	NonStatic	Min	-485.7	-43.152	0.	0.
42	0.4734	SLE-F-3-NL	NonStatic	Min	-473.277	-9.194	0.	0.
42	0.4734	SLE-F-3-NL	NonStatic	Min	-473.277	-9.194	0.	0.
42	0.94681	SLE-F-3-NL	NonStatic	Min	-459.671	22.792	0.	0.
42	0.94681	SLE-F-3-NL	NonStatic	Min	-459.671	22.792	0.	0.
42	1.42021	SLE-F-3-NL	NonStatic	Min	-444.881	52.806	0.	0.
42	1.42021	SLE-F-3-NL	NonStatic	Min	-444.881	52.806	0.	0.
42	1.89361	SLE-F-3-NL	NonStatic	Min	-428.908	80.846	0.	0.
42	1.89361	SLE-F-3-NL	NonStatic	Min	-428.908	80.846	0.	0.
42	2.36702	SLE-F-3-NL	NonStatic	Min	-411.753	106.915	0.	0.
42	2.36702	SLE-F-3-NL	NonStatic	Min	-411.753	106.915	0.	0.
42	2.84042	SLE-F-3-NL	NonStatic	Min	-393.414	131.011	0.	0.
42	0.	SLE-QP-NL	NonStatic	Max	-488.713	-37.502	0.	0.
42	0.4734	SLE-QP-NL	NonStatic	Max	-476.29	-6.77	0.	0.
42	0.4734	SLE-QP-NL	NonStatic	Max	-476.29	-5.579	0.	0.
42	0.94681	SLE-QP-NL	NonStatic	Max	-462.684	23.18	0.	0.
42	0.94681	SLE-QP-NL	NonStatic	Max	-462.684	24.322	0.	0.
42	1.42021	SLE-QP-NL	NonStatic	Max	-447.894	51.109	0.	0.

Table: Element Forces - Frames, Part 1 of 2

Frame	Station	OutputCase	CaseType	StepType	P	V2	V3	T
	m				KN	KN	KN	KN-m
42	1.42021	SLE-QP-NL	NonStatic	Max	-447.894	52.173	0.	0.
42	1.89361	SLE-QP-NL	NonStatic	Max	-431.921	76.988	0.	0.
42	1.89361	SLE-QP-NL	NonStatic	Max	-431.921	77.95	0.	0.
42	2.36702	SLE-QP-NL	NonStatic	Max	-414.766	100.791	0.	0.
42	2.36702	SLE-QP-NL	NonStatic	Max	-414.766	101.627	0.	0.
42	2.84042	SLE-QP-NL	NonStatic	Max	-396.427	122.497	0.	0.
42	0.	SLE-QP-NL	NonStatic	Min	-488.713	-37.502	0.	0.
42	0.4734	SLE-QP-NL	NonStatic	Min	-476.29	-6.77	0.	0.
42	0.4734	SLE-QP-NL	NonStatic	Min	-476.29	-5.579	0.	0.
42	0.94681	SLE-QP-NL	NonStatic	Min	-462.684	23.18	0.	0.
42	0.94681	SLE-QP-NL	NonStatic	Min	-462.684	24.322	0.	0.
42	1.42021	SLE-QP-NL	NonStatic	Min	-447.894	51.109	0.	0.
42	1.42021	SLE-QP-NL	NonStatic	Min	-447.894	52.173	0.	0.
42	1.89361	SLE-QP-NL	NonStatic	Min	-431.921	76.988	0.	0.
42	1.89361	SLE-QP-NL	NonStatic	Min	-431.921	77.95	0.	0.
42	2.36702	SLE-QP-NL	NonStatic	Min	-414.766	100.791	0.	0.
42	2.36702	SLE-QP-NL	NonStatic	Min	-414.766	101.627	0.	0.
42	2.84042	SLE-QP-NL	NonStatic	Min	-396.427	122.497	0.	0.
42	0.	SLV1-NL	NonStatic	Max	-516.084	-38.815	0.	0.
42	0.4734	SLV1-NL	NonStatic	Max	-503.486	-8.439	0.	0.
42	0.4734	SLV1-NL	NonStatic	Max	-503.488	9.707	0.	0.
42	0.94681	SLV1-NL	NonStatic	Max	-489.691	38.	0.	0.
42	0.94681	SLV1-NL	NonStatic	Max	-489.693	56.548	0.	0.
42	1.42021	SLV1-NL	NonStatic	Max	-474.696	82.757	0.	0.
42	1.42021	SLV1-NL	NonStatic	Max	-474.698	101.704	0.	0.
42	1.89361	SLV1-NL	NonStatic	Max	-458.501	125.83	0.	0.
42	1.89361	SLV1-NL	NonStatic	Max	-458.503	145.169	0.	0.
42	2.36702	SLV1-NL	NonStatic	Max	-441.107	167.212	0.	0.
42	2.36702	SLV1-NL	NonStatic	Max	-441.109	186.933	0.	0.
42	2.84042	SLV1-NL	NonStatic	Max	-422.512	206.892	0.	0.
42	0.	SLV1-NL	NonStatic	Min	-516.084	-38.815	0.	0.
42	0.4734	SLV1-NL	NonStatic	Min	-503.486	-8.439	0.	0.
42	0.4734	SLV1-NL	NonStatic	Min	-503.488	9.707	0.	0.
42	0.94681	SLV1-NL	NonStatic	Min	-489.691	38.	0.	0.
42	0.94681	SLV1-NL	NonStatic	Min	-489.693	56.548	0.	0.
42	1.42021	SLV1-NL	NonStatic	Min	-474.696	82.757	0.	0.
42	1.42021	SLV1-NL	NonStatic	Min	-474.698	101.704	0.	0.
42	1.89361	SLV1-NL	NonStatic	Min	-458.501	125.83	0.	0.
42	1.89361	SLV1-NL	NonStatic	Min	-458.503	145.169	0.	0.
42	2.36702	SLV1-NL	NonStatic	Min	-441.107	167.212	0.	0.
42	2.36702	SLV1-NL	NonStatic	Min	-441.109	186.933	0.	0.
42	2.84042	SLV1-NL	NonStatic	Min	-422.512	206.892	0.	0.
42	0.	SLV2-NL	NonStatic	Max	-491.315	-47.126	0.	0.
42	0.4734	SLV2-NL	NonStatic	Max	-478.718	-14.425	0.	0.
42	0.4734	SLV2-NL	NonStatic	Max	-478.718	-14.425	0.	0.
42	0.94681	SLV2-NL	NonStatic	Max	-464.92	16.414	0.	0.
42	0.94681	SLV2-NL	NonStatic	Max	-464.92	16.414	0.	0.
42	1.42021	SLV2-NL	NonStatic	Max	-449.923	45.392	0.	0.
42	1.42021	SLV2-NL	NonStatic	Max	-449.923	45.392	0.	0.
42	1.89361	SLV2-NL	NonStatic	Max	-433.726	72.508	0.	0.
42	1.89361	SLV2-NL	NonStatic	Max	-433.726	72.508	0.	0.
42	2.36702	SLV2-NL	NonStatic	Max	-416.33	97.762	0.	0.
42	2.36702	SLV2-NL	NonStatic	Max	-416.33	97.762	0.	0.
42	2.84042	SLV2-NL	NonStatic	Max	-397.733	121.155	0.	0.

Table: Element Forces - Frames, Part 1 of 2

Frame	Station	OutputCase	CaseType	StepType	P	V2	V3	T
	m				KN	KN	KN	KN-m
42	0.	SLV2-NL	NonStatic	Min	-491.315	-47.126	0.	0.
42	0.4734	SLV2-NL	NonStatic	Min	-478.718	-14.425	0.	0.
42	0.4734	SLV2-NL	NonStatic	Min	-478.718	-14.425	0.	0.
42	0.94681	SLV2-NL	NonStatic	Min	-464.92	16.414	0.	0.
42	0.94681	SLV2-NL	NonStatic	Min	-464.92	16.414	0.	0.
42	1.42021	SLV2-NL	NonStatic	Min	-449.923	45.392	0.	0.
42	1.42021	SLV2-NL	NonStatic	Min	-449.923	45.392	0.	0.
42	1.89361	SLV2-NL	NonStatic	Min	-433.726	72.508	0.	0.
42	1.89361	SLV2-NL	NonStatic	Min	-433.726	72.508	0.	0.
42	2.36702	SLV2-NL	NonStatic	Min	-416.33	97.762	0.	0.
42	2.36702	SLV2-NL	NonStatic	Min	-416.33	97.762	0.	0.
42	2.84042	SLV2-NL	NonStatic	Min	-397.733	121.155	0.	0.
42	0.	SLV3-NL	NonStatic	Max	-517.968	-37.584	0.	0.
42	0.4734	SLV3-NL	NonStatic	Max	-505.719	-7.208	0.	0.
42	0.4734	SLV3-NL	NonStatic	Max	-505.721	10.942	0.	0.
42	0.94681	SLV3-NL	NonStatic	Max	-492.306	39.234	0.	0.
42	0.94681	SLV3-NL	NonStatic	Max	-492.308	57.787	0.	0.
42	1.42021	SLV3-NL	NonStatic	Max	-477.726	83.996	0.	0.
42	1.42021	SLV3-NL	NonStatic	Max	-477.728	102.946	0.	0.
42	1.89361	SLV3-NL	NonStatic	Max	-461.98	127.072	0.	0.
42	1.89361	SLV3-NL	NonStatic	Max	-461.982	146.414	0.	0.
42	2.36702	SLV3-NL	NonStatic	Max	-445.067	168.457	0.	0.
42	2.36702	SLV3-NL	NonStatic	Max	-445.069	188.179	0.	0.
42	2.84042	SLV3-NL	NonStatic	Max	-426.988	208.138	0.	0.
42	0.	SLV3-NL	NonStatic	Min	-517.968	-37.584	0.	0.
42	0.4734	SLV3-NL	NonStatic	Min	-505.719	-7.208	0.	0.
42	0.4734	SLV3-NL	NonStatic	Min	-505.721	10.942	0.	0.
42	0.94681	SLV3-NL	NonStatic	Min	-492.306	39.234	0.	0.
42	0.94681	SLV3-NL	NonStatic	Min	-492.308	57.787	0.	0.
42	1.42021	SLV3-NL	NonStatic	Min	-477.726	83.996	0.	0.
42	1.42021	SLV3-NL	NonStatic	Min	-477.728	102.946	0.	0.
42	1.89361	SLV3-NL	NonStatic	Min	-461.98	127.072	0.	0.
42	1.89361	SLV3-NL	NonStatic	Min	-461.982	146.414	0.	0.
42	2.36702	SLV3-NL	NonStatic	Min	-445.067	168.457	0.	0.
42	2.36702	SLV3-NL	NonStatic	Min	-445.069	188.179	0.	0.
42	2.84042	SLV3-NL	NonStatic	Min	-426.988	208.138	0.	0.
42	0.	SLV4-NL	NonStatic	Max	-493.203	-45.88	0.	0.
42	0.4734	SLV4-NL	NonStatic	Max	-480.954	-13.179	0.	0.
42	0.4734	SLV4-NL	NonStatic	Max	-480.954	-13.179	0.	0.
42	0.94681	SLV4-NL	NonStatic	Max	-467.539	17.66	0.	0.
42	0.94681	SLV4-NL	NonStatic	Max	-467.539	17.66	0.	0.
42	1.42021	SLV4-NL	NonStatic	Max	-452.957	46.638	0.	0.
42	1.42021	SLV4-NL	NonStatic	Max	-452.957	46.638	0.	0.
42	1.89361	SLV4-NL	NonStatic	Max	-437.208	73.754	0.	0.
42	1.89361	SLV4-NL	NonStatic	Max	-437.208	73.754	0.	0.
42	2.36702	SLV4-NL	NonStatic	Max	-420.294	99.008	0.	0.
42	2.36702	SLV4-NL	NonStatic	Max	-420.294	99.008	0.	0.
42	2.84042	SLV4-NL	NonStatic	Max	-402.212	122.4	0.	0.
42	0.	SLV4-NL	NonStatic	Min	-493.203	-45.88	0.	0.
42	0.4734	SLV4-NL	NonStatic	Min	-480.954	-13.179	0.	0.
42	0.4734	SLV4-NL	NonStatic	Min	-480.954	-13.179	0.	0.
42	0.94681	SLV4-NL	NonStatic	Min	-467.539	17.66	0.	0.
42	0.94681	SLV4-NL	NonStatic	Min	-467.539	17.66	0.	0.
42	1.42021	SLV4-NL	NonStatic	Min	-452.957	46.638	0.	0.

Table: Element Forces - Frames, Part 1 of 2

Frame	Station	OutputCase	CaseType	StepType	P	V2	V3	T
	m				KN	KN	KN	KN-m
42	1.42021	SLV4-NL	NonStatic	Min	-452.957	46.638	0.	0.
42	1.89361	SLV4-NL	NonStatic	Min	-437.208	73.754	0.	0.
42	1.89361	SLV4-NL	NonStatic	Min	-437.208	73.754	0.	0.
42	2.36702	SLV4-NL	NonStatic	Min	-420.294	99.008	0.	0.
42	2.36702	SLV4-NL	NonStatic	Min	-420.294	99.008	0.	0.
42	2.84042	SLV4-NL	NonStatic	Min	-402.212	122.4	0.	0.
42	0.	SLV5-NL	NonStatic	Max	-505.084	-39.787	0.	0.
42	0.4734	SLV5-NL	NonStatic	Max	-492.08	-8.597	0.	0.
42	0.4734	SLV5-NL	NonStatic	Max	-492.08	-2.941	0.	0.
42	0.94681	SLV5-NL	NonStatic	Max	-477.837	26.243	0.	0.
42	0.94681	SLV5-NL	NonStatic	Max	-477.837	31.979	0.	0.
42	1.42021	SLV5-NL	NonStatic	Max	-462.355	59.157	0.	0.
42	1.42021	SLV5-NL	NonStatic	Max	-462.355	64.952	0.	0.
42	1.89361	SLV5-NL	NonStatic	Max	-445.635	90.124	0.	0.
42	1.89361	SLV5-NL	NonStatic	Max	-445.635	95.956	0.	0.
42	2.36702	SLV5-NL	NonStatic	Max	-427.676	119.123	0.	0.
42	2.36702	SLV5-NL	NonStatic	Max	-427.676	124.971	0.	0.
42	2.84042	SLV5-NL	NonStatic	Max	-408.479	146.132	0.	0.
42	0.	SLV5-NL	NonStatic	Min	-505.084	-39.787	0.	0.
42	0.4734	SLV5-NL	NonStatic	Min	-492.08	-8.597	0.	0.
42	0.4734	SLV5-NL	NonStatic	Min	-492.08	-2.941	0.	0.
42	0.94681	SLV5-NL	NonStatic	Min	-477.837	26.243	0.	0.
42	0.94681	SLV5-NL	NonStatic	Min	-477.837	31.979	0.	0.
42	1.42021	SLV5-NL	NonStatic	Min	-462.355	59.157	0.	0.
42	1.42021	SLV5-NL	NonStatic	Min	-462.355	64.952	0.	0.
42	1.89361	SLV5-NL	NonStatic	Min	-445.635	90.124	0.	0.
42	1.89361	SLV5-NL	NonStatic	Min	-445.635	95.956	0.	0.
42	2.36702	SLV5-NL	NonStatic	Min	-427.676	119.123	0.	0.
42	2.36702	SLV5-NL	NonStatic	Min	-427.676	124.971	0.	0.
42	2.84042	SLV5-NL	NonStatic	Min	-408.479	146.132	0.	0.
42	0.	SLV6-NL	NonStatic	Max	-497.862	-41.914	0.	0.
42	0.4734	SLV6-NL	NonStatic	Max	-484.858	-10.026	0.	0.
42	0.4734	SLV6-NL	NonStatic	Max	-484.858	-10.026	0.	0.
42	0.94681	SLV6-NL	NonStatic	Max	-470.614	19.922	0.	0.
42	0.94681	SLV6-NL	NonStatic	Max	-470.614	19.922	0.	0.
42	1.42021	SLV6-NL	NonStatic	Max	-455.133	47.93	0.	0.
42	1.42021	SLV6-NL	NonStatic	Max	-455.133	47.93	0.	0.
42	1.89361	SLV6-NL	NonStatic	Max	-438.413	74.	0.	0.
42	1.89361	SLV6-NL	NonStatic	Max	-438.413	74.	0.	0.
42	2.36702	SLV6-NL	NonStatic	Max	-420.454	98.13	0.	0.
42	2.36702	SLV6-NL	NonStatic	Max	-420.454	98.13	0.	0.
42	2.84042	SLV6-NL	NonStatic	Max	-401.257	120.321	0.	0.
42	0.	SLV6-NL	NonStatic	Min	-497.862	-41.914	0.	0.
42	0.4734	SLV6-NL	NonStatic	Min	-484.858	-10.026	0.	0.
42	0.4734	SLV6-NL	NonStatic	Min	-484.858	-10.026	0.	0.
42	0.94681	SLV6-NL	NonStatic	Min	-470.614	19.922	0.	0.
42	0.94681	SLV6-NL	NonStatic	Min	-470.614	19.922	0.	0.
42	1.42021	SLV6-NL	NonStatic	Min	-455.133	47.93	0.	0.
42	1.42021	SLV6-NL	NonStatic	Min	-455.133	47.93	0.	0.
42	1.89361	SLV6-NL	NonStatic	Min	-438.413	74.	0.	0.
42	1.89361	SLV6-NL	NonStatic	Min	-438.413	74.	0.	0.
42	2.36702	SLV6-NL	NonStatic	Min	-420.454	98.13	0.	0.
42	2.36702	SLV6-NL	NonStatic	Min	-420.454	98.13	0.	0.
42	2.84042	SLV6-NL	NonStatic	Min	-401.257	120.321	0.	0.

Table: Element Forces - Frames, Part 1 of 2

Frame	Station	OutputCase	CaseType	StepType	P	V2	V3	T
	m				KN	KN	KN	KN-m
42	0.	SLV7-NL	NonStatic	Max	-511.36	-35.68	0.	0.
42	0.4734	SLV7-NL	NonStatic	Max	-499.519	-4.49	0.	0.
42	0.4734	SLV7-NL	NonStatic	Max	-499.519	1.179	0.	0.
42	0.94681	SLV7-NL	NonStatic	Max	-486.549	30.363	0.	0.
42	0.94681	SLV7-NL	NonStatic	Max	-486.549	36.113	0.	0.
42	1.42021	SLV7-NL	NonStatic	Max	-472.452	63.291	0.	0.
42	1.42021	SLV7-NL	NonStatic	Max	-472.452	69.097	0.	0.
42	1.89361	SLV7-NL	NonStatic	Max	-457.227	94.269	0.	0.
42	1.89361	SLV7-NL	NonStatic	Max	-457.227	100.109	0.	0.
42	2.36702	SLV7-NL	NonStatic	Max	-440.874	123.276	0.	0.
42	2.36702	SLV7-NL	NonStatic	Max	-440.874	129.128	0.	0.
42	2.84042	SLV7-NL	NonStatic	Max	-423.393	150.289	0.	0.
42	0.	SLV7-NL	NonStatic	Min	-511.36	-35.68	0.	0.
42	0.4734	SLV7-NL	NonStatic	Min	-499.519	-4.49	0.	0.
42	0.4734	SLV7-NL	NonStatic	Min	-499.519	1.179	0.	0.
42	0.94681	SLV7-NL	NonStatic	Min	-486.549	30.363	0.	0.
42	0.94681	SLV7-NL	NonStatic	Min	-486.549	36.113	0.	0.
42	1.42021	SLV7-NL	NonStatic	Min	-472.452	63.291	0.	0.
42	1.42021	SLV7-NL	NonStatic	Min	-472.452	69.097	0.	0.
42	1.89361	SLV7-NL	NonStatic	Min	-457.227	94.269	0.	0.
42	1.89361	SLV7-NL	NonStatic	Min	-457.227	100.109	0.	0.
42	2.36702	SLV7-NL	NonStatic	Min	-440.874	123.276	0.	0.
42	2.36702	SLV7-NL	NonStatic	Min	-440.874	129.128	0.	0.
42	2.84042	SLV7-NL	NonStatic	Min	-423.393	150.289	0.	0.
42	0.	SLV8-NL	NonStatic	Max	-504.158	-37.759	0.	0.
42	0.4734	SLV8-NL	NonStatic	Max	-492.316	-5.871	0.	0.
42	0.4734	SLV8-NL	NonStatic	Max	-492.316	-5.871	0.	0.
42	0.94681	SLV8-NL	NonStatic	Max	-479.346	24.077	0.	0.
42	0.94681	SLV8-NL	NonStatic	Max	-479.346	24.077	0.	0.
42	1.42021	SLV8-NL	NonStatic	Max	-465.249	52.086	0.	0.
42	1.42021	SLV8-NL	NonStatic	Max	-465.249	52.086	0.	0.
42	1.89361	SLV8-NL	NonStatic	Max	-450.024	78.155	0.	0.
42	1.89361	SLV8-NL	NonStatic	Max	-450.024	78.155	0.	0.
42	2.36702	SLV8-NL	NonStatic	Max	-433.671	102.285	0.	0.
42	2.36702	SLV8-NL	NonStatic	Max	-433.671	102.285	0.	0.
42	2.84042	SLV8-NL	NonStatic	Max	-416.19	124.476	0.	0.
42	0.	SLV8-NL	NonStatic	Min	-504.158	-37.759	0.	0.
42	0.4734	SLV8-NL	NonStatic	Min	-492.316	-5.871	0.	0.
42	0.4734	SLV8-NL	NonStatic	Min	-492.316	-5.871	0.	0.
42	0.94681	SLV8-NL	NonStatic	Min	-479.346	24.077	0.	0.
42	0.94681	SLV8-NL	NonStatic	Min	-479.346	24.077	0.	0.
42	1.42021	SLV8-NL	NonStatic	Min	-465.249	52.086	0.	0.
42	1.42021	SLV8-NL	NonStatic	Min	-465.249	52.086	0.	0.
42	1.89361	SLV8-NL	NonStatic	Min	-450.024	78.155	0.	0.
42	1.89361	SLV8-NL	NonStatic	Min	-450.024	78.155	0.	0.
42	2.36702	SLV8-NL	NonStatic	Min	-433.671	102.285	0.	0.
42	2.36702	SLV8-NL	NonStatic	Min	-433.671	102.285	0.	0.
42	2.84042	SLV8-NL	NonStatic	Min	-416.19	124.476	0.	0.
42	0.	SLV9-NL	NonStatic	Max	-501.576	-40.479	0.	0.
42	0.4734	SLV9-NL	NonStatic	Max	-489.327	-7.777	0.	0.
42	0.4734	SLV9-NL	NonStatic	Max	-489.328	-1.066	0.	0.
42	0.94681	SLV9-NL	NonStatic	Max	-475.912	29.773	0.	0.
42	0.94681	SLV9-NL	NonStatic	Max	-475.913	36.743	0.	0.
42	1.42021	SLV9-NL	NonStatic	Max	-461.331	65.72	0.	0.

Table: Element Forces - Frames, Part 1 of 2

Frame	Station	OutputCase	CaseType	StepType	P	V2	V3	T
	m				KN	KN	KN	KN-m
42	1.42021	SLV9-NL	NonStatic	Max	-461.331	72.932	0.	0.
42	1.89361	SLV9-NL	NonStatic	Max	-445.583	100.048	0.	0.
42	1.89361	SLV9-NL	NonStatic	Max	-445.583	107.486	0.	0.
42	2.36702	SLV9-NL	NonStatic	Max	-428.668	132.74	0.	0.
42	2.36702	SLV9-NL	NonStatic	Max	-428.669	140.39	0.	0.
42	2.84042	SLV9-NL	NonStatic	Max	-410.587	163.782	0.	0.
42	0.	SLV9-NL	NonStatic	Min	-501.576	-40.479	0.	0.
42	0.4734	SLV9-NL	NonStatic	Min	-489.327	-7.777	0.	0.
42	0.4734	SLV9-NL	NonStatic	Min	-489.328	-1.066	0.	0.
42	0.94681	SLV9-NL	NonStatic	Min	-475.912	29.773	0.	0.
42	0.94681	SLV9-NL	NonStatic	Min	-475.913	36.743	0.	0.
42	1.42021	SLV9-NL	NonStatic	Min	-461.331	65.72	0.	0.
42	1.42021	SLV9-NL	NonStatic	Min	-461.331	72.932	0.	0.
42	1.89361	SLV9-NL	NonStatic	Min	-445.583	100.048	0.	0.
42	1.89361	SLV9-NL	NonStatic	Min	-445.583	107.486	0.	0.
42	2.36702	SLV9-NL	NonStatic	Min	-428.668	132.74	0.	0.
42	2.36702	SLV9-NL	NonStatic	Min	-428.669	140.39	0.	0.
42	2.84042	SLV9-NL	NonStatic	Min	-410.587	163.782	0.	0.
42	0.	SLV10-NL	NonStatic	Max	-494.535	-38.345	0.	0.
42	0.4734	SLV10-NL	NonStatic	Max	-482.286	-7.97	0.	0.
42	0.4734	SLV10-NL	NonStatic	Max	-482.286	-7.97	0.	0.
42	0.94681	SLV10-NL	NonStatic	Max	-468.871	20.323	0.	0.
42	0.94681	SLV10-NL	NonStatic	Max	-468.871	20.322	0.	0.
42	1.42021	SLV10-NL	NonStatic	Max	-454.289	46.532	0.	0.
42	1.42021	SLV10-NL	NonStatic	Max	-454.289	46.532	0.	0.
42	1.89361	SLV10-NL	NonStatic	Max	-438.541	70.657	0.	0.
42	1.89361	SLV10-NL	NonStatic	Max	-438.541	70.657	0.	0.
42	2.36702	SLV10-NL	NonStatic	Max	-421.626	92.7	0.	0.
42	2.36702	SLV10-NL	NonStatic	Max	-421.626	92.7	0.	0.
42	2.84042	SLV10-NL	NonStatic	Max	-403.544	112.659	0.	0.
42	0.	SLV10-NL	NonStatic	Min	-494.535	-38.345	0.	0.
42	0.4734	SLV10-NL	NonStatic	Min	-482.286	-7.97	0.	0.
42	0.4734	SLV10-NL	NonStatic	Min	-482.286	-7.97	0.	0.
42	0.94681	SLV10-NL	NonStatic	Min	-468.871	20.323	0.	0.
42	0.94681	SLV10-NL	NonStatic	Min	-468.871	20.322	0.	0.
42	1.42021	SLV10-NL	NonStatic	Min	-454.289	46.532	0.	0.
42	1.42021	SLV10-NL	NonStatic	Min	-454.289	46.532	0.	0.
42	1.89361	SLV10-NL	NonStatic	Min	-438.541	70.657	0.	0.
42	1.89361	SLV10-NL	NonStatic	Min	-438.541	70.657	0.	0.
42	2.36702	SLV10-NL	NonStatic	Min	-421.626	92.7	0.	0.
42	2.36702	SLV10-NL	NonStatic	Min	-421.626	92.7	0.	0.
42	2.84042	SLV10-NL	NonStatic	Min	-403.544	112.659	0.	0.
42	0.	SLV11-NL	NonStatic	Max	-514.744	-40.982	0.	0.
42	0.4734	SLV11-NL	NonStatic	Max	-502.147	-8.281	0.	0.
42	0.4734	SLV11-NL	NonStatic	Max	-502.147	-1.547	0.	0.
42	0.94681	SLV11-NL	NonStatic	Max	-488.35	29.293	0.	0.
42	0.94681	SLV11-NL	NonStatic	Max	-488.35	36.28	0.	0.
42	1.42021	SLV11-NL	NonStatic	Max	-473.353	65.258	0.	0.
42	1.42021	SLV11-NL	NonStatic	Max	-473.353	72.481	0.	0.
42	1.89361	SLV11-NL	NonStatic	Max	-457.157	99.597	0.	0.
42	1.89361	SLV11-NL	NonStatic	Max	-457.157	107.039	0.	0.
42	2.36702	SLV11-NL	NonStatic	Max	-439.76	132.294	0.	0.
42	2.36702	SLV11-NL	NonStatic	Max	-439.761	139.936	0.	0.
42	2.84042	SLV11-NL	NonStatic	Max	-421.164	163.329	0.	0.

Table: Element Forces - Frames, Part 1 of 2

Frame	Station	OutputCase	CaseType	StepType	P	V2	V3	T
	m				KN	KN	KN	KN-m
42	0.	SLV11-NL	NonStatic	Min	-514.744	-40.982	0.	0.
42	0.4734	SLV11-NL	NonStatic	Min	-502.147	-8.281	0.	0.
42	0.4734	SLV11-NL	NonStatic	Min	-502.147	-1.547	0.	0.
42	0.94681	SLV11-NL	NonStatic	Min	-488.35	29.293	0.	0.
42	0.94681	SLV11-NL	NonStatic	Min	-488.35	36.28	0.	0.
42	1.42021	SLV11-NL	NonStatic	Min	-473.353	65.258	0.	0.
42	1.42021	SLV11-NL	NonStatic	Min	-473.353	72.481	0.	0.
42	1.89361	SLV11-NL	NonStatic	Min	-457.157	99.597	0.	0.
42	1.89361	SLV11-NL	NonStatic	Min	-457.157	107.039	0.	0.
42	2.36702	SLV11-NL	NonStatic	Min	-439.76	132.294	0.	0.
42	2.36702	SLV11-NL	NonStatic	Min	-439.761	139.936	0.	0.
42	2.84042	SLV11-NL	NonStatic	Min	-421.164	163.329	0.	0.
42	0.	SLV12-NL	NonStatic	Max	-507.725	-38.808	0.	0.
42	0.4734	SLV12-NL	NonStatic	Max	-495.128	-8.432	0.	0.
42	0.4734	SLV12-NL	NonStatic	Max	-495.128	-8.432	0.	0.
42	0.94681	SLV12-NL	NonStatic	Max	-481.33	19.86	0.	0.
42	0.94681	SLV12-NL	NonStatic	Max	-481.33	19.86	0.	0.
42	1.42021	SLV12-NL	NonStatic	Max	-466.333	46.069	0.	0.
42	1.42021	SLV12-NL	NonStatic	Max	-466.333	46.069	0.	0.
42	1.89361	SLV12-NL	NonStatic	Max	-450.136	70.195	0.	0.
42	1.89361	SLV12-NL	NonStatic	Max	-450.136	70.195	0.	0.
42	2.36702	SLV12-NL	NonStatic	Max	-432.74	92.238	0.	0.
42	2.36702	SLV12-NL	NonStatic	Max	-432.74	92.238	0.	0.
42	2.84042	SLV12-NL	NonStatic	Max	-414.143	112.197	0.	0.
42	0.	SLV12-NL	NonStatic	Min	-507.725	-38.808	0.	0.
42	0.4734	SLV12-NL	NonStatic	Min	-495.128	-8.432	0.	0.
42	0.4734	SLV12-NL	NonStatic	Min	-495.128	-8.432	0.	0.
42	0.94681	SLV12-NL	NonStatic	Min	-481.33	19.86	0.	0.
42	0.94681	SLV12-NL	NonStatic	Min	-481.33	19.86	0.	0.
42	1.42021	SLV12-NL	NonStatic	Min	-466.333	46.069	0.	0.
42	1.42021	SLV12-NL	NonStatic	Min	-466.333	46.069	0.	0.
42	1.89361	SLV12-NL	NonStatic	Min	-450.136	70.195	0.	0.
42	1.89361	SLV12-NL	NonStatic	Min	-450.136	70.195	0.	0.
42	2.36702	SLV12-NL	NonStatic	Min	-432.74	92.238	0.	0.
42	2.36702	SLV12-NL	NonStatic	Min	-432.74	92.238	0.	0.
42	2.84042	SLV12-NL	NonStatic	Min	-414.143	112.197	0.	0.
42	0.	SLV13-NL	NonStatic	Max	-483.614	-37.654	0.	0.
42	0.4734	SLV13-NL	NonStatic	Max	-471.772	-5.767	0.	0.
42	0.4734	SLV13-NL	NonStatic	Max	-471.772	-3.568	0.	0.
42	0.94681	SLV13-NL	NonStatic	Max	-458.802	26.38	0.	0.
42	0.94681	SLV13-NL	NonStatic	Max	-458.802	28.621	0.	0.
42	1.42021	SLV13-NL	NonStatic	Max	-444.705	56.63	0.	0.
42	1.42021	SLV13-NL	NonStatic	Max	-444.705	58.891	0.	0.
42	1.89361	SLV13-NL	NonStatic	Max	-429.48	84.961	0.	0.
42	1.89361	SLV13-NL	NonStatic	Max	-429.48	87.222	0.	0.
42	2.36702	SLV13-NL	NonStatic	Max	-413.127	111.352	0.	0.
42	2.36702	SLV13-NL	NonStatic	Max	-413.127	113.591	0.	0.
42	2.84042	SLV13-NL	NonStatic	Max	-395.646	135.782	0.	0.
42	0.	SLV13-NL	NonStatic	Min	-483.614	-37.654	0.	0.
42	0.4734	SLV13-NL	NonStatic	Min	-471.772	-5.767	0.	0.
42	0.4734	SLV13-NL	NonStatic	Min	-471.772	-3.568	0.	0.
42	0.94681	SLV13-NL	NonStatic	Min	-458.802	26.38	0.	0.
42	0.94681	SLV13-NL	NonStatic	Min	-458.802	28.621	0.	0.
42	1.42021	SLV13-NL	NonStatic	Min	-444.705	56.63	0.	0.

Table: Element Forces - Frames, Part 1 of 2

Frame	Station	OutputCase	CaseType	StepType	P	V2	V3	T
	m				KN	KN	KN	KN-m
42	1.42021	SLV13-NL	NonStatic	Min	-444.705	58.891	0.	0.
42	1.89361	SLV13-NL	NonStatic	Min	-429.48	84.961	0.	0.
42	1.89361	SLV13-NL	NonStatic	Min	-429.48	87.222	0.	0.
42	2.36702	SLV13-NL	NonStatic	Min	-413.127	111.352	0.	0.
42	2.36702	SLV13-NL	NonStatic	Min	-413.127	113.591	0.	0.
42	2.84042	SLV13-NL	NonStatic	Min	-395.646	135.782	0.	0.
42	0.	SLV14-NL	NonStatic	Max	-481.713	-36.468	0.	0.
42	0.4734	SLV14-NL	NonStatic	Max	-469.871	-5.279	0.	0.
42	0.4734	SLV14-NL	NonStatic	Max	-469.871	-5.213	0.	0.
42	0.94681	SLV14-NL	NonStatic	Max	-456.901	23.971	0.	0.
42	0.94681	SLV14-NL	NonStatic	Max	-456.901	23.971	0.	0.
42	1.42021	SLV14-NL	NonStatic	Max	-442.804	51.15	0.	0.
42	1.42021	SLV14-NL	NonStatic	Max	-442.804	51.15	0.	0.
42	1.89361	SLV14-NL	NonStatic	Max	-427.579	76.322	0.	0.
42	1.89361	SLV14-NL	NonStatic	Max	-427.579	76.322	0.	0.
42	2.36702	SLV14-NL	NonStatic	Max	-411.226	99.489	0.	0.
42	2.36702	SLV14-NL	NonStatic	Max	-411.226	99.489	0.	0.
42	2.84042	SLV14-NL	NonStatic	Max	-393.745	120.65	0.	0.
42	0.	SLV14-NL	NonStatic	Min	-481.713	-36.468	0.	0.
42	0.4734	SLV14-NL	NonStatic	Min	-469.871	-5.279	0.	0.
42	0.4734	SLV14-NL	NonStatic	Min	-469.871	-5.213	0.	0.
42	0.94681	SLV14-NL	NonStatic	Min	-456.901	23.971	0.	0.
42	0.94681	SLV14-NL	NonStatic	Min	-456.901	23.971	0.	0.
42	1.42021	SLV14-NL	NonStatic	Min	-442.804	51.15	0.	0.
42	1.42021	SLV14-NL	NonStatic	Min	-442.804	51.15	0.	0.
42	1.89361	SLV14-NL	NonStatic	Min	-427.579	76.322	0.	0.
42	1.89361	SLV14-NL	NonStatic	Min	-427.579	76.322	0.	0.
42	2.36702	SLV14-NL	NonStatic	Min	-411.226	99.489	0.	0.
42	2.36702	SLV14-NL	NonStatic	Min	-411.226	99.489	0.	0.
42	2.84042	SLV14-NL	NonStatic	Min	-393.745	120.65	0.	0.
42	0.	SLV15-NL	NonStatic	Max	-527.466	-39.348	0.	0.
42	0.4734	SLV15-NL	NonStatic	Max	-514.461	-7.461	0.	0.
42	0.4734	SLV15-NL	NonStatic	Max	-514.462	-5.07	0.	0.
42	0.94681	SLV15-NL	NonStatic	Max	-500.218	24.878	0.	0.
42	0.94681	SLV15-NL	NonStatic	Max	-500.218	27.294	0.	0.
42	1.42021	SLV15-NL	NonStatic	Max	-484.737	55.303	0.	0.
42	1.42021	SLV15-NL	NonStatic	Max	-484.737	57.712	0.	0.
42	1.89361	SLV15-NL	NonStatic	Max	-468.017	83.781	0.	0.
42	1.89361	SLV15-NL	NonStatic	Max	-468.017	86.155	0.	0.
42	2.36702	SLV15-NL	NonStatic	Max	-450.058	110.286	0.	0.
42	2.36702	SLV15-NL	NonStatic	Max	-450.058	112.6	0.	0.
42	2.84042	SLV15-NL	NonStatic	Max	-430.861	134.791	0.	0.
42	0.	SLV15-NL	NonStatic	Min	-527.466	-39.348	0.	0.
42	0.4734	SLV15-NL	NonStatic	Min	-514.461	-7.461	0.	0.
42	0.4734	SLV15-NL	NonStatic	Min	-514.462	-5.07	0.	0.
42	0.94681	SLV15-NL	NonStatic	Min	-500.218	24.878	0.	0.
42	0.94681	SLV15-NL	NonStatic	Min	-500.218	27.294	0.	0.
42	1.42021	SLV15-NL	NonStatic	Min	-484.737	55.303	0.	0.
42	1.42021	SLV15-NL	NonStatic	Min	-484.737	57.712	0.	0.
42	1.89361	SLV15-NL	NonStatic	Min	-468.017	83.781	0.	0.
42	1.89361	SLV15-NL	NonStatic	Min	-468.017	86.155	0.	0.
42	2.36702	SLV15-NL	NonStatic	Min	-450.058	110.286	0.	0.
42	2.36702	SLV15-NL	NonStatic	Min	-450.058	112.6	0.	0.
42	2.84042	SLV15-NL	NonStatic	Min	-430.861	134.791	0.	0.

Table: Element Forces - Frames, Part 1 of 2

Frame	Station	OutputCase	CaseType	StepType	P	V2	V3	T
	m				KN	KN	KN	KN-m
42	0.	SLV16-NL	NonStatic	Max	-525.711	-37.912	0.	0.
42	0.4734	SLV16-NL	NonStatic	Max	-512.706	-6.723	0.	0.
42	0.4734	SLV16-NL	NonStatic	Max	-512.706	-6.33	0.	0.
42	0.94681	SLV16-NL	NonStatic	Max	-498.463	22.854	0.	0.
42	0.94681	SLV16-NL	NonStatic	Max	-498.463	23.113	0.	0.
42	1.42021	SLV16-NL	NonStatic	Max	-482.981	50.291	0.	0.
42	1.42021	SLV16-NL	NonStatic	Max	-482.981	50.38	0.	0.
42	1.89361	SLV16-NL	NonStatic	Max	-466.261	75.552	0.	0.
42	1.89361	SLV16-NL	NonStatic	Max	-466.261	75.552	0.	0.
42	2.36702	SLV16-NL	NonStatic	Max	-448.303	98.719	0.	0.
42	2.36702	SLV16-NL	NonStatic	Max	-448.303	98.719	0.	0.
42	2.84042	SLV16-NL	NonStatic	Max	-429.105	119.88	0.	0.
42	0.	SLV16-NL	NonStatic	Min	-525.711	-37.912	0.	0.
42	0.4734	SLV16-NL	NonStatic	Min	-512.706	-6.723	0.	0.
42	0.4734	SLV16-NL	NonStatic	Min	-512.706	-6.33	0.	0.
42	0.94681	SLV16-NL	NonStatic	Min	-498.463	22.854	0.	0.
42	0.94681	SLV16-NL	NonStatic	Min	-498.463	23.113	0.	0.
42	1.42021	SLV16-NL	NonStatic	Min	-482.981	50.291	0.	0.
42	1.42021	SLV16-NL	NonStatic	Min	-482.981	50.38	0.	0.
42	1.89361	SLV16-NL	NonStatic	Min	-466.261	75.552	0.	0.
42	1.89361	SLV16-NL	NonStatic	Min	-466.261	75.552	0.	0.
42	2.36702	SLV16-NL	NonStatic	Min	-448.303	98.719	0.	0.
42	2.36702	SLV16-NL	NonStatic	Min	-448.303	98.719	0.	0.
42	2.84042	SLV16-NL	NonStatic	Min	-429.105	119.88	0.	0.
43	0.	SLU 1-NL	NonStatic	Max	-881.664	-409.289	-4.786E-14	0.
43	0.43006	SLU 1-NL	NonStatic	Max	-859.907	-353.356	-4.101E-14	0.
43	0.43006	SLU 1-NL	NonStatic	Max	-859.907	-352.671	-4.127E-14	0.
43	0.86012	SLU 1-NL	NonStatic	Max	-839.347	-298.734	-3.466E-14	0.
43	0.86012	SLU 1-NL	NonStatic	Max	-839.347	-297.742	-3.485E-14	0.
43	1.29018	SLU 1-NL	NonStatic	Max	-819.985	-245.803	-2.849E-14	0.
43	1.29018	SLU 1-NL	NonStatic	Max	-819.985	-244.554	-2.861E-14	0.
43	1.50521	SLU 1-NL	NonStatic	Max	-810.753	-219.333	-2.552E-14	0.
43	1.72024	SLU 1-NL	NonStatic	Max	-801.82	-194.611	-2.249E-14	0.
43	1.72024	SLU 1-NL	NonStatic	Max	-801.82	-193.153	-2.253E-14	0.
43	2.1503	SLU 1-NL	NonStatic	Max	-784.853	-145.207	-1.665E-14	0.
43	2.1503	SLU 1-NL	NonStatic	Max	-784.853	-143.59	-1.658E-14	0.
43	2.58036	SLU 1-NL	NonStatic	Max	-769.084	-97.64	-1.095E-14	0.
43	2.58036	SLU 1-NL	NonStatic	Max	-769.084	-95.914	-1.072E-14	0.
43	3.01042	SLU 1-NL	NonStatic	Max	-754.512	-51.961	-5.338E-15	0.
43	0.	SLU 1-NL	NonStatic	Min	-881.664	-409.289	-4.786E-14	0.
43	0.43006	SLU 1-NL	NonStatic	Min	-859.907	-353.356	-4.101E-14	0.
43	0.43006	SLU 1-NL	NonStatic	Min	-859.907	-352.671	-4.127E-14	0.
43	0.86012	SLU 1-NL	NonStatic	Min	-839.347	-298.734	-3.466E-14	0.
43	0.86012	SLU 1-NL	NonStatic	Min	-839.347	-297.742	-3.485E-14	0.
43	1.29018	SLU 1-NL	NonStatic	Min	-819.985	-245.803	-2.849E-14	0.
43	1.29018	SLU 1-NL	NonStatic	Min	-819.985	-244.554	-2.861E-14	0.
43	1.50521	SLU 1-NL	NonStatic	Min	-810.753	-219.333	-2.552E-14	0.
43	1.72024	SLU 1-NL	NonStatic	Min	-801.82	-194.611	-2.249E-14	0.
43	1.72024	SLU 1-NL	NonStatic	Min	-801.82	-193.153	-2.253E-14	0.
43	2.1503	SLU 1-NL	NonStatic	Min	-784.853	-145.207	-1.665E-14	0.
43	2.1503	SLU 1-NL	NonStatic	Min	-784.853	-143.59	-1.658E-14	0.
43	2.58036	SLU 1-NL	NonStatic	Min	-769.084	-97.64	-1.095E-14	0.
43	2.58036	SLU 1-NL	NonStatic	Min	-769.084	-95.914	-1.072E-14	0.
43	3.01042	SLU 1-NL	NonStatic	Min	-754.512	-51.961	-5.338E-15	0.

Table: Element Forces - Frames, Part 1 of 2

Frame	Station	OutputCase	CaseType	StepType	P	V2	V3	T
	m				KN	KN	KN	KN-m
43	0.	SLU 2-NL	NonStatic	Max	-881.664	-291.523	-3.391E-14	0.
43	0.43006	SLU 2-NL	NonStatic	Max	-859.907	-252.726	-2.916E-14	0.
43	0.43006	SLU 2-NL	NonStatic	Max	-859.907	-251.75	-2.925E-14	0.
43	0.86012	SLU 2-NL	NonStatic	Max	-839.347	-214.489	-2.469E-14	0.
43	0.86012	SLU 2-NL	NonStatic	Max	-839.347	-213.087	-2.469E-14	0.
43	1.29018	SLU 2-NL	NonStatic	Max	-819.985	-177.361	-2.031E-14	0.
43	1.29018	SLU 2-NL	NonStatic	Max	-819.985	-175.588	-2.022E-14	0.
43	1.50521	SLU 2-NL	NonStatic	Max	-810.753	-158.301	-1.810E-14	0.
43	1.72024	SLU 2-NL	NonStatic	Max	-801.82	-141.398	-1.603E-14	0.
43	1.72024	SLU 2-NL	NonStatic	Max	-801.82	-139.312	-1.584E-14	0.
43	2.1503	SLU 2-NL	NonStatic	Max	-784.853	-106.658	-1.184E-14	0.
43	2.1503	SLU 2-NL	NonStatic	Max	-784.853	-104.323	-1.150E-14	0.
43	2.58036	SLU 2-NL	NonStatic	Max	-769.084	-73.205	-7.694E-15	0.
43	2.58036	SLU 2-NL	NonStatic	Max	-769.084	-70.693	-7.165E-15	0.
43	3.01042	SLU 2-NL	NonStatic	Max	-754.513	-41.111	-3.542E-15	0.
43	0.	SLU 2-NL	NonStatic	Min	-881.664	-291.523	-3.391E-14	0.
43	0.43006	SLU 2-NL	NonStatic	Min	-859.907	-252.726	-2.916E-14	0.
43	0.43006	SLU 2-NL	NonStatic	Min	-859.907	-251.75	-2.925E-14	0.
43	0.86012	SLU 2-NL	NonStatic	Min	-839.347	-214.489	-2.469E-14	0.
43	0.86012	SLU 2-NL	NonStatic	Min	-839.347	-213.087	-2.469E-14	0.
43	1.29018	SLU 2-NL	NonStatic	Min	-819.985	-177.361	-2.031E-14	0.
43	1.29018	SLU 2-NL	NonStatic	Min	-819.985	-175.588	-2.022E-14	0.
43	1.50521	SLU 2-NL	NonStatic	Min	-810.753	-158.301	-1.810E-14	0.
43	1.72024	SLU 2-NL	NonStatic	Min	-801.82	-141.398	-1.603E-14	0.
43	1.72024	SLU 2-NL	NonStatic	Min	-801.82	-139.312	-1.584E-14	0.
43	2.1503	SLU 2-NL	NonStatic	Min	-784.853	-106.658	-1.184E-14	0.
43	2.1503	SLU 2-NL	NonStatic	Min	-784.853	-104.323	-1.150E-14	0.
43	2.58036	SLU 2-NL	NonStatic	Min	-769.084	-73.205	-7.694E-15	0.
43	2.58036	SLU 2-NL	NonStatic	Min	-769.084	-70.693	-7.165E-15	0.
43	3.01042	SLU 2-NL	NonStatic	Min	-754.513	-41.111	-3.542E-15	0.
43	0.	SLU 3-NL	NonStatic	Max	-586.523	-400.524	-4.703E-14	0.
43	0.43006	SLU 3-NL	NonStatic	Max	-569.786	-344.591	-4.018E-14	0.
43	0.43006	SLU 3-NL	NonStatic	Max	-569.786	-344.454	-4.054E-14	0.
43	0.86012	SLU 3-NL	NonStatic	Max	-553.971	-290.518	-3.393E-14	0.
43	0.86012	SLU 3-NL	NonStatic	Max	-553.971	-290.31	-3.426E-14	0.
43	1.29018	SLU 3-NL	NonStatic	Max	-539.077	-238.371	-2.790E-14	0.
43	1.29018	SLU 3-NL	NonStatic	Max	-539.077	-238.118	-2.821E-14	0.
43	1.50521	SLU 3-NL	NonStatic	Max	-531.975	-212.897	-2.512E-14	0.
43	1.72024	SLU 3-NL	NonStatic	Max	-525.104	-188.176	-2.209E-14	0.
43	1.72024	SLU 3-NL	NonStatic	Max	-525.104	-187.9	-2.236E-14	0.
43	2.1503	SLU 3-NL	NonStatic	Max	-512.052	-139.954	-1.649E-14	0.
43	2.1503	SLU 3-NL	NonStatic	Max	-512.052	-139.672	-1.672E-14	0.
43	2.58036	SLU 3-NL	NonStatic	Max	-499.922	-93.723	-1.110E-14	0.
43	2.58036	SLU 3-NL	NonStatic	Max	-499.922	-93.445	-1.127E-14	0.
43	3.01042	SLU 3-NL	NonStatic	Max	-488.713	-49.492	-5.889E-15	0.
43	0.	SLU 3-NL	NonStatic	Min	-586.523	-400.524	-4.703E-14	0.
43	0.43006	SLU 3-NL	NonStatic	Min	-569.786	-344.591	-4.018E-14	0.
43	0.43006	SLU 3-NL	NonStatic	Min	-569.786	-344.454	-4.054E-14	0.
43	0.86012	SLU 3-NL	NonStatic	Min	-553.971	-290.518	-3.393E-14	0.
43	0.86012	SLU 3-NL	NonStatic	Min	-553.971	-290.31	-3.426E-14	0.
43	1.29018	SLU 3-NL	NonStatic	Min	-539.077	-238.371	-2.790E-14	0.
43	1.29018	SLU 3-NL	NonStatic	Min	-539.077	-238.118	-2.821E-14	0.
43	1.50521	SLU 3-NL	NonStatic	Min	-531.975	-212.897	-2.512E-14	0.
43	1.72024	SLU 3-NL	NonStatic	Min	-525.104	-188.176	-2.209E-14	0.

Table: Element Forces - Frames, Part 1 of 2

Frame	Station	OutputCase	CaseType	StepType	P	V2	V3	T
	m				KN	KN	KN	KN-m
43	1.72024	SLU 3-NL	NonStatic	Min	-525.104	-187.9	-2.236E-14	0.
43	2.1503	SLU 3-NL	NonStatic	Min	-512.052	-139.954	-1.649E-14	0.
43	2.1503	SLU 3-NL	NonStatic	Min	-512.052	-139.672	-1.672E-14	0.
43	2.58036	SLU 3-NL	NonStatic	Min	-499.922	-93.723	-1.110E-14	0.
43	2.58036	SLU 3-NL	NonStatic	Min	-499.922	-93.445	-1.127E-14	0.
43	3.01042	SLU 3-NL	NonStatic	Min	-488.713	-49.492	-5.889E-15	0.
43	0.	SLU 4-NL	NonStatic	Max	-872.815	-405.228	-4.737E-14	0.
43	0.43006	SLU 4-NL	NonStatic	Max	-851.057	-349.295	-4.052E-14	0.
43	0.43006	SLU 4-NL	NonStatic	Max	-851.057	-349.296	-4.086E-14	0.
43	0.86012	SLU 4-NL	NonStatic	Max	-830.497	-295.359	-3.425E-14	0.
43	0.86012	SLU 4-NL	NonStatic	Max	-830.497	-295.359	-3.455E-14	0.
43	1.29018	SLU 4-NL	NonStatic	Max	-811.135	-243.42	-2.819E-14	0.
43	1.29018	SLU 4-NL	NonStatic	Max	-811.135	-243.42	-2.845E-14	0.
43	1.50521	SLU 4-NL	NonStatic	Max	-801.903	-218.199	-2.536E-14	0.
43	1.72024	SLU 4-NL	NonStatic	Max	-792.97	-193.477	-2.234E-14	0.
43	1.72024	SLU 4-NL	NonStatic	Max	-792.97	-193.477	-2.254E-14	0.
43	2.1503	SLU 4-NL	NonStatic	Max	-776.003	-145.531	-1.667E-14	0.
43	2.1503	SLU 4-NL	NonStatic	Max	-776.003	-145.531	-1.678E-14	0.
43	2.58036	SLU 4-NL	NonStatic	Max	-760.234	-99.582	-1.115E-14	0.
43	2.58036	SLU 4-NL	NonStatic	Max	-760.234	-99.582	-1.112E-14	0.
43	3.01042	SLU 4-NL	NonStatic	Max	-745.662	-55.629	-5.741E-15	0.
43	0.	SLU 4-NL	NonStatic	Min	-872.815	-405.228	-4.737E-14	0.
43	0.43006	SLU 4-NL	NonStatic	Min	-851.057	-349.295	-4.052E-14	0.
43	0.43006	SLU 4-NL	NonStatic	Min	-851.057	-349.296	-4.086E-14	0.
43	0.86012	SLU 4-NL	NonStatic	Min	-830.497	-295.359	-3.425E-14	0.
43	0.86012	SLU 4-NL	NonStatic	Min	-830.497	-295.359	-3.455E-14	0.
43	1.29018	SLU 4-NL	NonStatic	Min	-811.135	-243.42	-2.819E-14	0.
43	1.29018	SLU 4-NL	NonStatic	Min	-811.135	-243.42	-2.845E-14	0.
43	1.50521	SLU 4-NL	NonStatic	Min	-801.903	-218.199	-2.536E-14	0.
43	1.72024	SLU 4-NL	NonStatic	Min	-792.97	-193.477	-2.234E-14	0.
43	1.72024	SLU 4-NL	NonStatic	Min	-792.97	-193.477	-2.254E-14	0.
43	2.1503	SLU 4-NL	NonStatic	Min	-776.003	-145.531	-1.667E-14	0.
43	2.1503	SLU 4-NL	NonStatic	Min	-776.003	-145.531	-1.678E-14	0.
43	2.58036	SLU 4-NL	NonStatic	Min	-760.234	-99.582	-1.115E-14	0.
43	2.58036	SLU 4-NL	NonStatic	Min	-760.234	-99.582	-1.112E-14	0.
43	3.01042	SLU 4-NL	NonStatic	Min	-745.662	-55.629	-5.741E-15	0.
43	0.	SLU 5-NL	NonStatic	Max	-577.399	-405.483	-4.760E-14	0.
43	0.43006	SLU 5-NL	NonStatic	Max	-560.662	-349.55	-4.075E-14	0.
43	0.43006	SLU 5-NL	NonStatic	Max	-560.662	-349.55	-4.113E-14	0.
43	0.86012	SLU 5-NL	NonStatic	Max	-544.847	-295.614	-3.452E-14	0.
43	0.86012	SLU 5-NL	NonStatic	Max	-544.847	-295.614	-3.488E-14	0.
43	1.29018	SLU 5-NL	NonStatic	Max	-529.953	-243.674	-2.852E-14	0.
43	1.29018	SLU 5-NL	NonStatic	Max	-529.953	-243.675	-2.886E-14	0.
43	1.50521	SLU 5-NL	NonStatic	Max	-522.851	-218.453	-2.577E-14	0.
43	1.72024	SLU 5-NL	NonStatic	Max	-515.98	-193.732	-2.274E-14	0.
43	1.72024	SLU 5-NL	NonStatic	Max	-515.98	-193.732	-2.305E-14	0.
43	2.1503	SLU 5-NL	NonStatic	Max	-502.928	-145.786	-1.718E-14	0.
43	2.1503	SLU 5-NL	NonStatic	Max	-502.928	-145.786	-1.745E-14	0.
43	2.58036	SLU 5-NL	NonStatic	Max	-490.798	-99.836	-1.183E-14	0.
43	2.58036	SLU 5-NL	NonStatic	Max	-490.798	-99.836	-1.205E-14	0.
43	3.01042	SLU 5-NL	NonStatic	Max	-479.589	-55.883	-6.666E-15	0.
43	0.	SLU 5-NL	NonStatic	Min	-577.399	-405.483	-4.760E-14	0.
43	0.43006	SLU 5-NL	NonStatic	Min	-560.662	-349.55	-4.075E-14	0.
43	0.43006	SLU 5-NL	NonStatic	Min	-560.662	-349.55	-4.113E-14	0.

Table: Element Forces - Frames, Part 1 of 2

Frame	Station	OutputCase	CaseType	StepType	P	V2	V3	T
	m				KN	KN	KN	KN-m
43	0.86012	SLU 5-NL	NonStatic	Min	-544.847	-295.614	-3.452E-14	0.
43	0.86012	SLU 5-NL	NonStatic	Min	-544.847	-295.614	-3.488E-14	0.
43	1.29018	SLU 5-NL	NonStatic	Min	-529.953	-243.674	-2.852E-14	0.
43	1.29018	SLU 5-NL	NonStatic	Min	-529.953	-243.675	-2.886E-14	0.
43	1.50521	SLU 5-NL	NonStatic	Min	-522.851	-218.453	-2.577E-14	0.
43	1.72024	SLU 5-NL	NonStatic	Min	-515.98	-193.732	-2.274E-14	0.
43	1.72024	SLU 5-NL	NonStatic	Min	-515.98	-193.732	-2.305E-14	0.
43	2.1503	SLU 5-NL	NonStatic	Min	-502.928	-145.786	-1.718E-14	0.
43	2.1503	SLU 5-NL	NonStatic	Min	-502.928	-145.786	-1.745E-14	0.
43	2.58036	SLU 5-NL	NonStatic	Min	-490.798	-99.836	-1.183E-14	0.
43	2.58036	SLU 5-NL	NonStatic	Min	-490.798	-99.836	-1.205E-14	0.
43	3.01042	SLU 5-NL	NonStatic	Min	-479.589	-55.883	-6.666E-15	0.
43	0.	SLU 6-NL	NonStatic	Max	-890.49	-389.922	-4.554E-14	0.
43	0.43006	SLU 6-NL	NonStatic	Max	-868.733	-351.124	-4.079E-14	0.
43	0.43006	SLU 6-NL	NonStatic	Max	-868.736	-337.118	-3.940E-14	0.
43	0.86012	SLU 6-NL	NonStatic	Max	-848.176	-299.856	-3.484E-14	0.
43	0.86012	SLU 6-NL	NonStatic	Max	-848.179	-285.254	-3.334E-14	0.
43	1.29018	SLU 6-NL	NonStatic	Max	-828.816	-249.529	-2.897E-14	0.
43	1.29018	SLU 6-NL	NonStatic	Max	-828.819	-234.381	-2.737E-14	0.
43	1.50521	SLU 6-NL	NonStatic	Max	-819.587	-217.095	-2.526E-14	0.
43	1.72024	SLU 6-NL	NonStatic	Max	-810.655	-200.192	-2.319E-14	0.
43	1.72024	SLU 6-NL	NonStatic	Max	-810.657	-184.547	-2.148E-14	0.
43	2.1503	SLU 6-NL	NonStatic	Max	-793.69	-151.893	-1.748E-14	0.
43	2.1503	SLU 6-NL	NonStatic	Max	-793.693	-135.8	-1.563E-14	0.
43	2.58036	SLU 6-NL	NonStatic	Max	-777.924	-104.682	-1.182E-14	0.
43	2.58036	SLU 6-NL	NonStatic	Max	-777.926	-88.191	-9.781E-15	0.
43	3.01042	SLU 6-NL	NonStatic	Max	-763.354	-58.609	-6.158E-15	0.
43	0.	SLU 6-NL	NonStatic	Min	-890.49	-389.922	-4.554E-14	0.
43	0.43006	SLU 6-NL	NonStatic	Min	-868.733	-351.124	-4.079E-14	0.
43	0.43006	SLU 6-NL	NonStatic	Min	-868.736	-337.118	-3.940E-14	0.
43	0.86012	SLU 6-NL	NonStatic	Min	-848.176	-299.856	-3.484E-14	0.
43	0.86012	SLU 6-NL	NonStatic	Min	-848.179	-285.254	-3.334E-14	0.
43	1.29018	SLU 6-NL	NonStatic	Min	-828.816	-249.529	-2.897E-14	0.
43	1.29018	SLU 6-NL	NonStatic	Min	-828.819	-234.381	-2.737E-14	0.
43	1.50521	SLU 6-NL	NonStatic	Min	-819.587	-217.095	-2.526E-14	0.
43	1.72024	SLU 6-NL	NonStatic	Min	-810.655	-200.192	-2.319E-14	0.
43	1.72024	SLU 6-NL	NonStatic	Min	-810.657	-184.547	-2.148E-14	0.
43	2.1503	SLU 6-NL	NonStatic	Min	-793.69	-151.893	-1.748E-14	0.
43	2.1503	SLU 6-NL	NonStatic	Min	-793.693	-135.8	-1.563E-14	0.
43	2.58036	SLU 6-NL	NonStatic	Min	-777.924	-104.682	-1.182E-14	0.
43	2.58036	SLU 6-NL	NonStatic	Min	-777.926	-88.191	-9.781E-15	0.
43	3.01042	SLU 6-NL	NonStatic	Min	-763.354	-58.609	-6.158E-15	0.
43	0.	SLU 7-NL	NonStatic	Max	-595.624	-389.118	-4.565E-14	0.
43	0.43006	SLU 7-NL	NonStatic	Max	-578.887	-350.321	-4.090E-14	0.
43	0.43006	SLU 7-NL	NonStatic	Max	-578.889	-335.764	-3.948E-14	0.
43	0.86012	SLU 7-NL	NonStatic	Max	-563.074	-298.502	-3.492E-14	0.
43	0.86012	SLU 7-NL	NonStatic	Max	-563.076	-283.59	-3.345E-14	0.
43	1.29018	SLU 7-NL	NonStatic	Max	-548.181	-247.864	-2.907E-14	0.
43	1.29018	SLU 7-NL	NonStatic	Max	-548.183	-232.621	-2.754E-14	0.
43	1.50521	SLU 7-NL	NonStatic	Max	-541.082	-215.334	-2.542E-14	0.
43	1.72024	SLU 7-NL	NonStatic	Max	-534.21	-198.432	-2.335E-14	0.
43	1.72024	SLU 7-NL	NonStatic	Max	-534.212	-182.879	-2.176E-14	0.
43	2.1503	SLU 7-NL	NonStatic	Max	-521.161	-150.226	-1.776E-14	0.
43	2.1503	SLU 7-NL	NonStatic	Max	-521.162	-134.379	-1.610E-14	0.

Table: Element Forces - Frames, Part 1 of 2

Frame	Station	OutputCase	CaseType	StepType	P	V2	V3	T
	m				KN	KN	KN	KN-m
43	2.58036	SLU 7-NL	NonStatic	Max	-509.032	-103.261	-1.229E-14	0.
43	2.58036	SLU 7-NL	NonStatic	Max	-509.034	-87.129	-1.054E-14	0.
43	3.01042	SLU 7-NL	NonStatic	Max	-497.825	-57.547	-6.919E-15	0.
43	0.	SLU 7-NL	NonStatic	Min	-595.624	-389.118	-4.565E-14	0.
43	0.43006	SLU 7-NL	NonStatic	Min	-578.887	-350.321	-4.090E-14	0.
43	0.43006	SLU 7-NL	NonStatic	Min	-578.889	-335.764	-3.948E-14	0.
43	0.86012	SLU 7-NL	NonStatic	Min	-563.074	-298.502	-3.492E-14	0.
43	0.86012	SLU 7-NL	NonStatic	Min	-563.076	-283.59	-3.345E-14	0.
43	1.29018	SLU 7-NL	NonStatic	Min	-548.181	-247.864	-2.907E-14	0.
43	1.29018	SLU 7-NL	NonStatic	Min	-548.183	-232.621	-2.754E-14	0.
43	1.50521	SLU 7-NL	NonStatic	Min	-541.082	-215.334	-2.542E-14	0.
43	1.72024	SLU 7-NL	NonStatic	Min	-534.21	-198.432	-2.335E-14	0.
43	1.72024	SLU 7-NL	NonStatic	Min	-534.212	-182.879	-2.176E-14	0.
43	2.1503	SLU 7-NL	NonStatic	Min	-521.161	-150.226	-1.776E-14	0.
43	2.1503	SLU 7-NL	NonStatic	Min	-521.162	-134.379	-1.610E-14	0.
43	2.58036	SLU 7-NL	NonStatic	Min	-509.032	-103.261	-1.229E-14	0.
43	2.58036	SLU 7-NL	NonStatic	Min	-509.034	-87.129	-1.054E-14	0.
43	3.01042	SLU 7-NL	NonStatic	Min	-497.825	-57.547	-6.919E-15	0.
43	0.	SLE-C-NL	NonStatic	Max	-665.979	-310.597	-3.632E-14	0.
43	0.43006	SLE-C-NL	NonStatic	Max	-649.243	-268.136	-3.112E-14	0.
43	0.43006	SLE-C-NL	NonStatic	Max	-649.243	-267.621	-3.132E-14	0.
43	0.86012	SLE-C-NL	NonStatic	Max	-633.427	-226.696	-2.631E-14	0.
43	0.86012	SLE-C-NL	NonStatic	Max	-633.427	-225.952	-2.645E-14	0.
43	1.29018	SLE-C-NL	NonStatic	Max	-618.533	-186.562	-2.163E-14	0.
43	1.29018	SLE-C-NL	NonStatic	Max	-618.533	-185.626	-2.172E-14	0.
43	1.50521	SLE-C-NL	NonStatic	Max	-611.432	-166.507	-1.938E-14	0.
43	1.72024	SLE-C-NL	NonStatic	Max	-604.56	-147.772	-1.708E-14	0.
43	1.72024	SLE-C-NL	NonStatic	Max	-604.561	-146.679	-1.711E-14	0.
43	2.1503	SLE-C-NL	NonStatic	Max	-591.509	-110.361	-1.266E-14	0.
43	2.1503	SLE-C-NL	NonStatic	Max	-591.509	-109.149	-1.261E-14	0.
43	2.58036	SLE-C-NL	NonStatic	Max	-579.379	-74.367	-8.351E-15	0.
43	2.58036	SLE-C-NL	NonStatic	Max	-579.379	-73.075	-8.180E-15	0.
43	3.01042	SLE-C-NL	NonStatic	Max	-568.17	-39.828	-4.109E-15	0.
43	0.	SLE-C-NL	NonStatic	Min	-665.979	-310.597	-3.632E-14	0.
43	0.43006	SLE-C-NL	NonStatic	Min	-649.243	-268.136	-3.112E-14	0.
43	0.43006	SLE-C-NL	NonStatic	Min	-649.243	-267.621	-3.132E-14	0.
43	0.86012	SLE-C-NL	NonStatic	Min	-633.427	-226.696	-2.631E-14	0.
43	0.86012	SLE-C-NL	NonStatic	Min	-633.427	-225.952	-2.645E-14	0.
43	1.29018	SLE-C-NL	NonStatic	Min	-618.533	-186.562	-2.163E-14	0.
43	1.29018	SLE-C-NL	NonStatic	Min	-618.533	-185.626	-2.172E-14	0.
43	1.50521	SLE-C-NL	NonStatic	Min	-611.432	-166.507	-1.938E-14	0.
43	1.72024	SLE-C-NL	NonStatic	Min	-604.56	-147.772	-1.708E-14	0.
43	1.72024	SLE-C-NL	NonStatic	Min	-604.561	-146.679	-1.711E-14	0.
43	2.1503	SLE-C-NL	NonStatic	Min	-591.509	-110.361	-1.266E-14	0.
43	2.1503	SLE-C-NL	NonStatic	Min	-591.509	-109.149	-1.261E-14	0.
43	2.58036	SLE-C-NL	NonStatic	Min	-579.379	-74.367	-8.351E-15	0.
43	2.58036	SLE-C-NL	NonStatic	Min	-579.379	-73.075	-8.180E-15	0.
43	3.01042	SLE-C-NL	NonStatic	Min	-568.17	-39.828	-4.109E-15	0.
43	0.	SLE-F-1-NL	NonStatic	Max	-650.088	-281.64	-3.291E-14	0.
43	0.43006	SLE-F-1-NL	NonStatic	Max	-633.351	-242.843	-2.815E-14	0.
43	0.43006	SLE-F-1-NL	NonStatic	Max	-633.351	-242.286	-2.832E-14	0.
43	0.86012	SLE-F-1-NL	NonStatic	Max	-617.536	-205.024	-2.375E-14	0.
43	0.86012	SLE-F-1-NL	NonStatic	Max	-617.536	-204.219	-2.386E-14	0.
43	1.29018	SLE-F-1-NL	NonStatic	Max	-602.642	-168.493	-1.949E-14	0.

Table: Element Forces - Frames, Part 1 of 2

Frame	Station	OutputCase	CaseType	StepType	P	V2	V3	T
	m				KN	KN	KN	KN-m
43	1.29018	SLE-F-1-NL	NonStatic	Max	-602.642	-167.478	-1.953E-14	0.
43	1.50521	SLE-F-1-NL	NonStatic	Max	-595.54	-150.191	-1.742E-14	0.
43	1.72024	SLE-F-1-NL	NonStatic	Max	-588.669	-133.288	-1.535E-14	0.
43	1.72024	SLE-F-1-NL	NonStatic	Max	-588.669	-132.1	-1.533E-14	0.
43	2.1503	SLE-F-1-NL	NonStatic	Max	-575.618	-99.447	-1.133E-14	0.
43	2.1503	SLE-F-1-NL	NonStatic	Max	-575.618	-98.124	-1.123E-14	0.
43	2.58036	SLE-F-1-NL	NonStatic	Max	-563.487	-67.006	-7.418E-15	0.
43	2.58036	SLE-F-1-NL	NonStatic	Max	-563.488	-65.591	-7.192E-15	0.
43	3.01042	SLE-F-1-NL	NonStatic	Max	-552.279	-36.009	-3.569E-15	0.
43	0.	SLE-F-1-NL	NonStatic	Min	-650.088	-281.64	-3.291E-14	0.
43	0.43006	SLE-F-1-NL	NonStatic	Min	-633.351	-242.843	-2.815E-14	0.
43	0.43006	SLE-F-1-NL	NonStatic	Min	-633.351	-242.286	-2.832E-14	0.
43	0.86012	SLE-F-1-NL	NonStatic	Min	-617.536	-205.024	-2.375E-14	0.
43	0.86012	SLE-F-1-NL	NonStatic	Min	-617.536	-204.219	-2.386E-14	0.
43	1.29018	SLE-F-1-NL	NonStatic	Min	-602.642	-168.493	-1.949E-14	0.
43	1.29018	SLE-F-1-NL	NonStatic	Min	-602.642	-167.478	-1.953E-14	0.
43	1.50521	SLE-F-1-NL	NonStatic	Min	-595.54	-150.191	-1.742E-14	0.
43	1.72024	SLE-F-1-NL	NonStatic	Min	-588.669	-133.288	-1.535E-14	0.
43	1.72024	SLE-F-1-NL	NonStatic	Min	-588.669	-132.1	-1.533E-14	0.
43	2.1503	SLE-F-1-NL	NonStatic	Min	-575.618	-99.447	-1.133E-14	0.
43	2.1503	SLE-F-1-NL	NonStatic	Min	-575.618	-98.124	-1.123E-14	0.
43	2.58036	SLE-F-1-NL	NonStatic	Min	-563.487	-67.006	-7.418E-15	0.
43	2.58036	SLE-F-1-NL	NonStatic	Min	-563.488	-65.591	-7.192E-15	0.
43	3.01042	SLE-F-1-NL	NonStatic	Min	-552.279	-36.009	-3.569E-15	0.
43	0.	SLE-F-2-NL	NonStatic	Max	-583.51	-303.	-3.547E-14	0.
43	0.43006	SLE-F-2-NL	NonStatic	Max	-566.773	-261.271	-3.036E-14	0.
43	0.43006	SLE-F-2-NL	NonStatic	Max	-566.773	-261.271	-3.062E-14	0.
43	0.86012	SLE-F-2-NL	NonStatic	Max	-550.958	-221.078	-2.570E-14	0.
43	0.86012	SLE-F-2-NL	NonStatic	Max	-550.958	-221.078	-2.594E-14	0.
43	1.29018	SLE-F-2-NL	NonStatic	Max	-536.064	-182.421	-2.121E-14	0.
43	1.29018	SLE-F-2-NL	NonStatic	Max	-536.064	-182.421	-2.142E-14	0.
43	1.50521	SLE-F-2-NL	NonStatic	Max	-528.962	-163.668	-1.912E-14	0.
43	1.72024	SLE-F-2-NL	NonStatic	Max	-522.091	-145.3	-1.687E-14	0.
43	1.72024	SLE-F-2-NL	NonStatic	Max	-522.091	-145.3	-1.705E-14	0.
43	2.1503	SLE-F-2-NL	NonStatic	Max	-509.039	-109.715	-1.270E-14	0.
43	2.1503	SLE-F-2-NL	NonStatic	Max	-509.039	-109.715	-1.282E-14	0.
43	2.58036	SLE-F-2-NL	NonStatic	Max	-496.909	-75.666	-8.653E-15	0.
43	2.58036	SLE-F-2-NL	NonStatic	Max	-496.909	-75.666	-8.699E-15	0.
43	3.01042	SLE-F-2-NL	NonStatic	Max	-485.7	-43.152	-4.717E-15	0.
43	0.	SLE-F-2-NL	NonStatic	Min	-583.51	-303.	-3.547E-14	0.
43	0.43006	SLE-F-2-NL	NonStatic	Min	-566.773	-261.271	-3.036E-14	0.
43	0.43006	SLE-F-2-NL	NonStatic	Min	-566.773	-261.271	-3.062E-14	0.
43	0.86012	SLE-F-2-NL	NonStatic	Min	-550.958	-221.078	-2.570E-14	0.
43	0.86012	SLE-F-2-NL	NonStatic	Min	-550.958	-221.078	-2.594E-14	0.
43	1.29018	SLE-F-2-NL	NonStatic	Min	-536.064	-182.421	-2.121E-14	0.
43	1.29018	SLE-F-2-NL	NonStatic	Min	-536.064	-182.421	-2.142E-14	0.
43	1.50521	SLE-F-2-NL	NonStatic	Min	-528.962	-163.668	-1.912E-14	0.
43	1.72024	SLE-F-2-NL	NonStatic	Min	-522.091	-145.3	-1.687E-14	0.
43	1.72024	SLE-F-2-NL	NonStatic	Min	-522.091	-145.3	-1.705E-14	0.
43	2.1503	SLE-F-2-NL	NonStatic	Min	-509.039	-109.715	-1.270E-14	0.
43	2.1503	SLE-F-2-NL	NonStatic	Min	-509.039	-109.715	-1.282E-14	0.
43	2.58036	SLE-F-2-NL	NonStatic	Min	-496.909	-75.666	-8.653E-15	0.
43	2.58036	SLE-F-2-NL	NonStatic	Min	-496.909	-75.666	-8.699E-15	0.
43	3.01042	SLE-F-2-NL	NonStatic	Min	-485.7	-43.152	-4.717E-15	0.

Table: Element Forces - Frames, Part 1 of 2

Frame	Station	OutputCase	CaseType	StepType	P	V2	V3	T
	m				KN	KN	KN	KN-m
43	0.	SLE-F-3-NL	NonStatic	Max	-589.533	-299.824	-3.510E-14	0.
43	0.43006	SLE-F-3-NL	NonStatic	Max	-572.796	-261.026	-3.035E-14	0.
43	0.43006	SLE-F-3-NL	NonStatic	Max	-572.796	-258.697	-3.032E-14	0.
43	0.86012	SLE-F-3-NL	NonStatic	Max	-556.981	-221.435	-2.576E-14	0.
43	0.86012	SLE-F-3-NL	NonStatic	Max	-556.981	-218.778	-2.567E-14	0.
43	1.29018	SLE-F-3-NL	NonStatic	Max	-542.087	-183.052	-2.130E-14	0.
43	1.29018	SLE-F-3-NL	NonStatic	Max	-542.088	-180.097	-2.115E-14	0.
43	1.50521	SLE-F-3-NL	NonStatic	Max	-534.986	-162.81	-1.903E-14	0.
43	1.72024	SLE-F-3-NL	NonStatic	Max	-528.115	-145.907	-1.696E-14	0.
43	1.72024	SLE-F-3-NL	NonStatic	Max	-528.115	-142.684	-1.675E-14	0.
43	2.1503	SLE-F-3-NL	NonStatic	Max	-515.064	-110.03	-1.275E-14	0.
43	2.1503	SLE-F-3-NL	NonStatic	Max	-515.064	-106.567	-1.246E-14	0.
43	2.58036	SLE-F-3-NL	NonStatic	Max	-502.934	-75.449	-8.644E-15	0.
43	2.58036	SLE-F-3-NL	NonStatic	Max	-502.934	-71.775	-8.242E-15	0.
43	3.01042	SLE-F-3-NL	NonStatic	Max	-491.725	-42.193	-4.619E-15	0.
43	0.	SLE-F-3-NL	NonStatic	Min	-589.533	-299.824	-3.510E-14	0.
43	0.43006	SLE-F-3-NL	NonStatic	Min	-572.796	-261.026	-3.035E-14	0.
43	0.43006	SLE-F-3-NL	NonStatic	Min	-572.796	-258.697	-3.032E-14	0.
43	0.86012	SLE-F-3-NL	NonStatic	Min	-556.981	-221.435	-2.576E-14	0.
43	0.86012	SLE-F-3-NL	NonStatic	Min	-556.981	-218.778	-2.567E-14	0.
43	1.29018	SLE-F-3-NL	NonStatic	Min	-542.087	-183.052	-2.130E-14	0.
43	1.29018	SLE-F-3-NL	NonStatic	Min	-542.088	-180.097	-2.115E-14	0.
43	1.50521	SLE-F-3-NL	NonStatic	Min	-534.986	-162.81	-1.903E-14	0.
43	1.72024	SLE-F-3-NL	NonStatic	Min	-528.115	-145.907	-1.696E-14	0.
43	1.72024	SLE-F-3-NL	NonStatic	Min	-528.115	-142.684	-1.675E-14	0.
43	2.1503	SLE-F-3-NL	NonStatic	Min	-515.064	-110.03	-1.275E-14	0.
43	2.1503	SLE-F-3-NL	NonStatic	Min	-515.064	-106.567	-1.246E-14	0.
43	2.58036	SLE-F-3-NL	NonStatic	Min	-502.934	-75.449	-8.644E-15	0.
43	2.58036	SLE-F-3-NL	NonStatic	Min	-502.934	-71.775	-8.242E-15	0.
43	3.01042	SLE-F-3-NL	NonStatic	Min	-491.725	-42.193	-4.619E-15	0.
43	0.	SLE-QP-NL	NonStatic	Max	-586.523	-282.765	-3.308E-14	0.
43	0.43006	SLE-QP-NL	NonStatic	Max	-569.786	-243.968	-2.833E-14	0.
43	0.43006	SLE-QP-NL	NonStatic	Max	-569.786	-243.541	-2.852E-14	0.
43	0.86012	SLE-QP-NL	NonStatic	Max	-553.971	-206.28	-2.395E-14	0.
43	0.86012	SLE-QP-NL	NonStatic	Max	-553.971	-205.662	-2.410E-14	0.
43	1.29018	SLE-QP-NL	NonStatic	Max	-539.077	-169.936	-1.972E-14	0.
43	1.29018	SLE-QP-NL	NonStatic	Max	-539.077	-169.16	-1.982E-14	0.
43	1.50521	SLE-QP-NL	NonStatic	Max	-531.975	-151.873	-1.770E-14	0.
43	1.72024	SLE-QP-NL	NonStatic	Max	-525.104	-134.97	-1.563E-14	0.
43	1.72024	SLE-QP-NL	NonStatic	Max	-525.104	-134.066	-1.567E-14	0.
43	2.1503	SLE-QP-NL	NonStatic	Max	-512.052	-101.412	-1.167E-14	0.
43	2.1503	SLE-QP-NL	NonStatic	Max	-512.052	-100.413	-1.165E-14	0.
43	2.58036	SLE-QP-NL	NonStatic	Max	-499.922	-69.295	-7.838E-15	0.
43	2.58036	SLE-QP-NL	NonStatic	Max	-499.922	-68.231	-7.716E-15	0.
43	3.01042	SLE-QP-NL	NonStatic	Max	-488.713	-38.649	-4.094E-15	0.
43	0.	SLE-QP-NL	NonStatic	Min	-586.523	-282.765	-3.308E-14	0.
43	0.43006	SLE-QP-NL	NonStatic	Min	-569.786	-243.968	-2.833E-14	0.
43	0.43006	SLE-QP-NL	NonStatic	Min	-569.786	-243.541	-2.852E-14	0.
43	0.86012	SLE-QP-NL	NonStatic	Min	-553.971	-206.28	-2.395E-14	0.
43	0.86012	SLE-QP-NL	NonStatic	Min	-553.971	-205.662	-2.410E-14	0.
43	1.29018	SLE-QP-NL	NonStatic	Min	-539.077	-169.936	-1.972E-14	0.
43	1.29018	SLE-QP-NL	NonStatic	Min	-539.077	-169.16	-1.982E-14	0.
43	1.50521	SLE-QP-NL	NonStatic	Min	-531.975	-151.873	-1.770E-14	0.
43	1.72024	SLE-QP-NL	NonStatic	Min	-525.104	-134.97	-1.563E-14	0.

Table: Element Forces - Frames, Part 1 of 2

Frame	Station	OutputCase	CaseType	StepType	P	V2	V3	T
	m				KN	KN	KN	KN-m
43	1.72024	SLE-QP-NL	NonStatic	Min	-525.104	-134.066	-1.567E-14	0.
43	2.1503	SLE-QP-NL	NonStatic	Min	-512.052	-101.412	-1.167E-14	0.
43	2.1503	SLE-QP-NL	NonStatic	Min	-512.052	-100.413	-1.165E-14	0.
43	2.58036	SLE-QP-NL	NonStatic	Min	-499.922	-69.295	-7.838E-15	0.
43	2.58036	SLE-QP-NL	NonStatic	Min	-499.922	-68.231	-7.716E-15	0.
43	3.01042	SLE-QP-NL	NonStatic	Min	-488.713	-38.649	-4.094E-15	0.
43	0.	SLV1-NL	NonStatic	Max	-590.411	-368.444	-4.320E-14	0.
43	0.43006	SLV1-NL	NonStatic	Max	-573.439	-319.198	-3.717E-14	0.
43	0.43006	SLV1-NL	NonStatic	Max	-573.439	-319.198	-3.750E-14	0.
43	0.86012	SLV1-NL	NonStatic	Max	-557.402	-271.573	-3.167E-14	0.
43	0.86012	SLV1-NL	NonStatic	Max	-557.402	-271.573	-3.198E-14	0.
43	1.29018	SLV1-NL	NonStatic	Max	-542.298	-225.571	-2.634E-14	0.
43	1.29018	SLV1-NL	NonStatic	Max	-542.298	-225.571	-2.663E-14	0.
43	1.50521	SLV1-NL	NonStatic	Max	-535.097	-203.178	-2.389E-14	0.
43	1.72024	SLV1-NL	NonStatic	Max	-528.129	-181.191	-2.120E-14	0.
43	1.72024	SLV1-NL	NonStatic	Max	-528.129	-181.191	-2.146E-14	0.
43	2.1503	SLV1-NL	NonStatic	Max	-514.894	-138.433	-1.622E-14	0.
43	2.1503	SLV1-NL	NonStatic	Max	-514.894	-138.433	-1.645E-14	0.
43	2.58036	SLV1-NL	NonStatic	Max	-502.594	-97.297	-1.141E-14	0.
43	2.58036	SLV1-NL	NonStatic	Max	-502.594	-97.298	-1.158E-14	0.
43	3.01042	SLV1-NL	NonStatic	Max	-491.228	-57.784	-6.736E-15	0.
43	0.	SLV1-NL	NonStatic	Min	-590.411	-368.444	-4.320E-14	0.
43	0.43006	SLV1-NL	NonStatic	Min	-573.439	-319.198	-3.717E-14	0.
43	0.43006	SLV1-NL	NonStatic	Min	-573.439	-319.198	-3.750E-14	0.
43	0.86012	SLV1-NL	NonStatic	Min	-557.402	-271.573	-3.167E-14	0.
43	0.86012	SLV1-NL	NonStatic	Min	-557.402	-271.573	-3.198E-14	0.
43	1.29018	SLV1-NL	NonStatic	Min	-542.298	-225.571	-2.634E-14	0.
43	1.29018	SLV1-NL	NonStatic	Min	-542.298	-225.571	-2.663E-14	0.
43	1.50521	SLV1-NL	NonStatic	Min	-535.097	-203.178	-2.389E-14	0.
43	1.72024	SLV1-NL	NonStatic	Min	-528.129	-181.191	-2.120E-14	0.
43	1.72024	SLV1-NL	NonStatic	Min	-528.129	-181.191	-2.146E-14	0.
43	2.1503	SLV1-NL	NonStatic	Min	-514.894	-138.433	-1.622E-14	0.
43	2.1503	SLV1-NL	NonStatic	Min	-514.894	-138.433	-1.645E-14	0.
43	2.58036	SLV1-NL	NonStatic	Min	-502.594	-97.297	-1.141E-14	0.
43	2.58036	SLV1-NL	NonStatic	Min	-502.594	-97.298	-1.158E-14	0.
43	3.01042	SLV1-NL	NonStatic	Min	-491.228	-57.784	-6.736E-15	0.
43	0.	SLV2-NL	NonStatic	Max	-615.164	-312.797	-3.660E-14	0.
43	0.43006	SLV2-NL	NonStatic	Max	-598.193	-282.983	-3.295E-14	0.
43	0.43006	SLV2-NL	NonStatic	Max	-598.195	-269.299	-3.155E-14	0.
43	0.86012	SLV2-NL	NonStatic	Max	-582.158	-240.934	-2.808E-14	0.
43	0.86012	SLV2-NL	NonStatic	Max	-582.16	-226.749	-2.660E-14	0.
43	1.29018	SLV2-NL	NonStatic	Max	-567.057	-199.834	-2.331E-14	0.
43	1.29018	SLV2-NL	NonStatic	Max	-567.06	-185.179	-2.175E-14	0.
43	1.50521	SLV2-NL	NonStatic	Max	-559.858	-172.265	-2.017E-14	0.
43	1.72024	SLV2-NL	NonStatic	Max	-552.891	-159.713	-1.863E-14	0.
43	1.72024	SLV2-NL	NonStatic	Max	-552.893	-144.616	-1.698E-14	0.
43	2.1503	SLV2-NL	NonStatic	Max	-539.658	-120.601	-1.404E-14	0.
43	2.1503	SLV2-NL	NonStatic	Max	-539.66	-105.09	-1.229E-14	0.
43	2.58036	SLV2-NL	NonStatic	Max	-527.36	-82.524	-9.528E-15	0.
43	2.58036	SLV2-NL	NonStatic	Max	-527.362	-66.626	-7.644E-15	0.
43	3.01042	SLV2-NL	NonStatic	Max	-515.996	-45.51	-5.058E-15	0.
43	0.	SLV2-NL	NonStatic	Min	-615.164	-312.797	-3.660E-14	0.
43	0.43006	SLV2-NL	NonStatic	Min	-598.193	-282.983	-3.295E-14	0.
43	0.43006	SLV2-NL	NonStatic	Min	-598.195	-269.299	-3.155E-14	0.

Table: Element Forces - Frames, Part 1 of 2

Frame	Station	OutputCase	CaseType	StepType	P	V2	V3	T
	m				KN	KN	KN	KN-m
43	0.86012	SLV2-NL	NonStatic	Min	-582.158	-240.934	-2.808E-14	0.
43	0.86012	SLV2-NL	NonStatic	Min	-582.16	-226.749	-2.660E-14	0.
43	1.29018	SLV2-NL	NonStatic	Min	-567.057	-199.834	-2.331E-14	0.
43	1.29018	SLV2-NL	NonStatic	Min	-567.06	-185.179	-2.175E-14	0.
43	1.50521	SLV2-NL	NonStatic	Min	-559.858	-172.265	-2.017E-14	0.
43	1.72024	SLV2-NL	NonStatic	Min	-552.891	-159.713	-1.863E-14	0.
43	1.72024	SLV2-NL	NonStatic	Min	-552.893	-144.616	-1.698E-14	0.
43	2.1503	SLV2-NL	NonStatic	Min	-539.658	-120.601	-1.404E-14	0.
43	2.1503	SLV2-NL	NonStatic	Min	-539.66	-105.09	-1.229E-14	0.
43	2.58036	SLV2-NL	NonStatic	Min	-527.36	-82.524	-9.528E-15	0.
43	2.58036	SLV2-NL	NonStatic	Min	-527.362	-66.626	-7.644E-15	0.
43	3.01042	SLV2-NL	NonStatic	Min	-515.996	-45.51	-5.058E-15	0.
43	0.	SLV3-NL	NonStatic	Max	-589.552	-367.198	-4.306E-14	0.
43	0.43006	SLV3-NL	NonStatic	Max	-573.05	-317.952	-3.703E-14	0.
43	0.43006	SLV3-NL	NonStatic	Max	-573.05	-317.952	-3.735E-14	0.
43	0.86012	SLV3-NL	NonStatic	Max	-557.457	-270.327	-3.152E-14	0.
43	0.86012	SLV3-NL	NonStatic	Max	-557.457	-270.328	-3.183E-14	0.
43	1.29018	SLV3-NL	NonStatic	Max	-542.772	-224.325	-2.620E-14	0.
43	1.29018	SLV3-NL	NonStatic	Max	-542.772	-224.325	-2.648E-14	0.
43	1.50521	SLV3-NL	NonStatic	Max	-535.77	-201.933	-2.374E-14	0.
43	1.72024	SLV3-NL	NonStatic	Max	-528.995	-179.945	-2.105E-14	0.
43	1.72024	SLV3-NL	NonStatic	Max	-528.995	-179.945	-2.131E-14	0.
43	2.1503	SLV3-NL	NonStatic	Max	-516.127	-137.187	-1.607E-14	0.
43	2.1503	SLV3-NL	NonStatic	Max	-516.127	-137.187	-1.629E-14	0.
43	2.58036	SLV3-NL	NonStatic	Max	-504.167	-96.052	-1.126E-14	0.
43	2.58036	SLV3-NL	NonStatic	Max	-504.167	-96.052	-1.142E-14	0.
43	3.01042	SLV3-NL	NonStatic	Max	-493.115	-56.538	-6.579E-15	0.
43	0.	SLV3-NL	NonStatic	Min	-589.552	-367.198	-4.306E-14	0.
43	0.43006	SLV3-NL	NonStatic	Min	-573.05	-317.952	-3.703E-14	0.
43	0.43006	SLV3-NL	NonStatic	Min	-573.05	-317.952	-3.735E-14	0.
43	0.86012	SLV3-NL	NonStatic	Min	-557.457	-270.327	-3.152E-14	0.
43	0.86012	SLV3-NL	NonStatic	Min	-557.457	-270.328	-3.183E-14	0.
43	1.29018	SLV3-NL	NonStatic	Min	-542.772	-224.325	-2.620E-14	0.
43	1.29018	SLV3-NL	NonStatic	Min	-542.772	-224.325	-2.648E-14	0.
43	1.50521	SLV3-NL	NonStatic	Min	-535.77	-201.933	-2.374E-14	0.
43	1.72024	SLV3-NL	NonStatic	Min	-528.995	-179.945	-2.105E-14	0.
43	1.72024	SLV3-NL	NonStatic	Min	-528.995	-179.945	-2.131E-14	0.
43	2.1503	SLV3-NL	NonStatic	Min	-516.127	-137.187	-1.607E-14	0.
43	2.1503	SLV3-NL	NonStatic	Min	-516.127	-137.187	-1.629E-14	0.
43	2.58036	SLV3-NL	NonStatic	Min	-504.167	-96.052	-1.126E-14	0.
43	2.58036	SLV3-NL	NonStatic	Min	-504.167	-96.052	-1.142E-14	0.
43	3.01042	SLV3-NL	NonStatic	Min	-493.115	-56.538	-6.579E-15	0.
43	0.	SLV4-NL	NonStatic	Max	-614.302	-311.559	-3.646E-14	0.
43	0.43006	SLV4-NL	NonStatic	Max	-597.8	-281.745	-3.281E-14	0.
43	0.43006	SLV4-NL	NonStatic	Max	-597.803	-268.066	-3.141E-14	0.
43	0.86012	SLV4-NL	NonStatic	Max	-582.209	-239.702	-2.793E-14	0.
43	0.86012	SLV4-NL	NonStatic	Max	-582.212	-225.52	-2.646E-14	0.
43	1.29018	SLV4-NL	NonStatic	Max	-567.527	-198.606	-2.316E-14	0.
43	1.29018	SLV4-NL	NonStatic	Max	-567.529	-183.952	-2.160E-14	0.
43	1.50521	SLV4-NL	NonStatic	Max	-560.528	-171.039	-2.002E-14	0.
43	1.72024	SLV4-NL	NonStatic	Max	-553.753	-158.487	-1.848E-14	0.
43	1.72024	SLV4-NL	NonStatic	Max	-553.755	-143.391	-1.683E-14	0.
43	2.1503	SLV4-NL	NonStatic	Max	-540.887	-119.376	-1.389E-14	0.
43	2.1503	SLV4-NL	NonStatic	Max	-540.889	-103.864	-1.214E-14	0.

Table: Element Forces - Frames, Part 1 of 2

Frame	Station	OutputCase	CaseType	StepType	P	V2	V3	T
	m				KN	KN	KN	KN-m
43	2.58036	SLV4-NL	NonStatic	Max	-528.929	-81.298	-9.377E-15	0.
43	2.58036	SLV4-NL	NonStatic	Max	-528.931	-65.398	-7.489E-15	0.
43	3.01042	SLV4-NL	NonStatic	Max	-517.88	-44.282	-4.903E-15	0.
43	0.	SLV4-NL	NonStatic	Min	-614.302	-311.559	-3.646E-14	0.
43	0.43006	SLV4-NL	NonStatic	Min	-597.8	-281.745	-3.281E-14	0.
43	0.43006	SLV4-NL	NonStatic	Min	-597.803	-268.066	-3.141E-14	0.
43	0.86012	SLV4-NL	NonStatic	Min	-582.209	-239.702	-2.793E-14	0.
43	0.86012	SLV4-NL	NonStatic	Min	-582.212	-225.52	-2.646E-14	0.
43	1.29018	SLV4-NL	NonStatic	Min	-567.527	-198.606	-2.316E-14	0.
43	1.29018	SLV4-NL	NonStatic	Min	-567.529	-183.952	-2.160E-14	0.
43	1.50521	SLV4-NL	NonStatic	Min	-560.528	-171.039	-2.002E-14	0.
43	1.72024	SLV4-NL	NonStatic	Min	-553.753	-158.487	-1.848E-14	0.
43	1.72024	SLV4-NL	NonStatic	Min	-553.755	-143.391	-1.683E-14	0.
43	2.1503	SLV4-NL	NonStatic	Min	-540.887	-119.376	-1.389E-14	0.
43	2.1503	SLV4-NL	NonStatic	Min	-540.889	-103.864	-1.214E-14	0.
43	2.58036	SLV4-NL	NonStatic	Min	-528.929	-81.298	-9.377E-15	0.
43	2.58036	SLV4-NL	NonStatic	Min	-528.931	-65.398	-7.489E-15	0.
43	3.01042	SLV4-NL	NonStatic	Min	-517.88	-44.282	-4.903E-15	0.
43	0.	SLV5-NL	NonStatic	Max	-600.226	-309.431	-3.622E-14	0.
43	0.43006	SLV5-NL	NonStatic	Max	-582.706	-266.985	-3.103E-14	0.
43	0.43006	SLV5-NL	NonStatic	Max	-582.706	-266.986	-3.129E-14	0.
43	0.86012	SLV5-NL	NonStatic	Max	-566.15	-226.102	-2.628E-14	0.
43	0.86012	SLV5-NL	NonStatic	Max	-566.15	-226.102	-2.653E-14	0.
43	1.29018	SLV5-NL	NonStatic	Max	-550.559	-186.78	-2.171E-14	0.
43	1.29018	SLV5-NL	NonStatic	Max	-550.559	-186.78	-2.193E-14	0.
43	1.50521	SLV5-NL	NonStatic	Max	-543.125	-167.705	-1.959E-14	0.
43	1.72024	SLV5-NL	NonStatic	Max	-535.932	-149.021	-1.731E-14	0.
43	1.72024	SLV5-NL	NonStatic	Max	-535.932	-149.021	-1.749E-14	0.
43	2.1503	SLV5-NL	NonStatic	Max	-522.27	-112.823	-1.306E-14	0.
43	2.1503	SLV5-NL	NonStatic	Max	-522.27	-112.823	-1.319E-14	0.
43	2.58036	SLV5-NL	NonStatic	Max	-509.572	-78.186	-8.944E-15	0.
43	2.58036	SLV5-NL	NonStatic	Max	-509.572	-78.186	-8.992E-15	0.
43	3.01042	SLV5-NL	NonStatic	Max	-497.838	-45.112	-4.942E-15	0.
43	0.	SLV5-NL	NonStatic	Min	-600.226	-309.431	-3.622E-14	0.
43	0.43006	SLV5-NL	NonStatic	Min	-582.706	-266.985	-3.103E-14	0.
43	0.43006	SLV5-NL	NonStatic	Min	-582.706	-266.986	-3.129E-14	0.
43	0.86012	SLV5-NL	NonStatic	Min	-566.15	-226.102	-2.628E-14	0.
43	0.86012	SLV5-NL	NonStatic	Min	-566.15	-226.102	-2.653E-14	0.
43	1.29018	SLV5-NL	NonStatic	Min	-550.559	-186.78	-2.171E-14	0.
43	1.29018	SLV5-NL	NonStatic	Min	-550.559	-186.78	-2.193E-14	0.
43	1.50521	SLV5-NL	NonStatic	Min	-543.125	-167.705	-1.959E-14	0.
43	1.72024	SLV5-NL	NonStatic	Min	-535.932	-149.021	-1.731E-14	0.
43	1.72024	SLV5-NL	NonStatic	Min	-535.932	-149.021	-1.749E-14	0.
43	2.1503	SLV5-NL	NonStatic	Min	-522.27	-112.823	-1.306E-14	0.
43	2.1503	SLV5-NL	NonStatic	Min	-522.27	-112.823	-1.319E-14	0.
43	2.58036	SLV5-NL	NonStatic	Min	-509.572	-78.186	-8.944E-15	0.
43	2.58036	SLV5-NL	NonStatic	Min	-509.572	-78.186	-8.992E-15	0.
43	3.01042	SLV5-NL	NonStatic	Min	-497.838	-45.112	-4.942E-15	0.
43	0.	SLV6-NL	NonStatic	Max	-607.445	-293.263	-3.430E-14	0.
43	0.43006	SLV6-NL	NonStatic	Max	-589.925	-256.648	-2.982E-14	0.
43	0.43006	SLV6-NL	NonStatic	Max	-589.926	-252.824	-2.960E-14	0.
43	0.86012	SLV6-NL	NonStatic	Max	-573.37	-217.718	-2.530E-14	0.
43	0.86012	SLV6-NL	NonStatic	Max	-573.371	-213.604	-2.503E-14	0.
43	1.29018	SLV6-NL	NonStatic	Max	-557.78	-180.008	-2.091E-14	0.

Table: Element Forces - Frames, Part 1 of 2

Frame	Station	OutputCase	CaseType	StepType	P	V2	V3	T
	m				KN	KN	KN	KN-m
43	1.29018	SLV6-NL	NonStatic	Max	-557.78	-175.636	-2.058E-14	0.
43	1.50521	SLV6-NL	NonStatic	Max	-550.346	-159.405	-1.859E-14	0.
43	1.72024	SLV6-NL	NonStatic	Max	-543.153	-143.551	-1.665E-14	0.
43	1.72024	SLV6-NL	NonStatic	Max	-543.154	-138.954	-1.625E-14	0.
43	2.1503	SLV6-NL	NonStatic	Max	-529.491	-108.378	-1.251E-14	0.
43	2.1503	SLV6-NL	NonStatic	Max	-529.491	-103.587	-1.203E-14	0.
43	2.58036	SLV6-NL	NonStatic	Max	-516.794	-74.522	-8.473E-15	0.
43	2.58036	SLV6-NL	NonStatic	Max	-516.794	-69.568	-7.885E-15	0.
43	3.01042	SLV6-NL	NonStatic	Max	-505.06	-42.013	-4.511E-15	0.
43	0.	SLV6-NL	NonStatic	Min	-607.445	-293.263	-3.430E-14	0.
43	0.43006	SLV6-NL	NonStatic	Min	-589.925	-256.648	-2.982E-14	0.
43	0.43006	SLV6-NL	NonStatic	Min	-589.926	-252.824	-2.960E-14	0.
43	0.86012	SLV6-NL	NonStatic	Min	-573.37	-217.718	-2.530E-14	0.
43	0.86012	SLV6-NL	NonStatic	Min	-573.371	-213.604	-2.503E-14	0.
43	1.29018	SLV6-NL	NonStatic	Min	-557.78	-180.008	-2.091E-14	0.
43	1.29018	SLV6-NL	NonStatic	Min	-557.78	-175.636	-2.058E-14	0.
43	1.50521	SLV6-NL	NonStatic	Min	-550.346	-159.405	-1.859E-14	0.
43	1.72024	SLV6-NL	NonStatic	Min	-543.153	-143.551	-1.665E-14	0.
43	1.72024	SLV6-NL	NonStatic	Min	-543.154	-138.954	-1.625E-14	0.
43	2.1503	SLV6-NL	NonStatic	Min	-529.491	-108.378	-1.251E-14	0.
43	2.1503	SLV6-NL	NonStatic	Min	-529.491	-103.587	-1.203E-14	0.
43	2.58036	SLV6-NL	NonStatic	Min	-516.794	-74.522	-8.473E-15	0.
43	2.58036	SLV6-NL	NonStatic	Min	-516.794	-69.568	-7.885E-15	0.
43	3.01042	SLV6-NL	NonStatic	Min	-505.06	-42.013	-4.511E-15	0.
43	0.	SLV7-NL	NonStatic	Max	-597.366	-305.276	-3.574E-14	0.
43	0.43006	SLV7-NL	NonStatic	Max	-581.413	-262.831	-3.054E-14	0.
43	0.43006	SLV7-NL	NonStatic	Max	-581.413	-262.831	-3.080E-14	0.
43	0.86012	SLV7-NL	NonStatic	Max	-566.337	-221.947	-2.579E-14	0.
43	0.86012	SLV7-NL	NonStatic	Max	-566.337	-221.947	-2.604E-14	0.
43	1.29018	SLV7-NL	NonStatic	Max	-552.14	-182.625	-2.122E-14	0.
43	1.29018	SLV7-NL	NonStatic	Max	-552.14	-182.625	-2.143E-14	0.
43	1.50521	SLV7-NL	NonStatic	Max	-545.371	-163.55	-1.910E-14	0.
43	1.72024	SLV7-NL	NonStatic	Max	-538.821	-144.866	-1.681E-14	0.
43	1.72024	SLV7-NL	NonStatic	Max	-538.821	-144.866	-1.699E-14	0.
43	2.1503	SLV7-NL	NonStatic	Max	-526.381	-108.668	-1.255E-14	0.
43	2.1503	SLV7-NL	NonStatic	Max	-526.381	-108.668	-1.268E-14	0.
43	2.58036	SLV7-NL	NonStatic	Max	-514.818	-74.031	-8.434E-15	0.
43	2.58036	SLV7-NL	NonStatic	Max	-514.818	-74.031	-8.468E-15	0.
43	3.01042	SLV7-NL	NonStatic	Max	-504.134	-40.957	-4.417E-15	0.
43	0.	SLV7-NL	NonStatic	Min	-597.366	-305.276	-3.574E-14	0.
43	0.43006	SLV7-NL	NonStatic	Min	-581.413	-262.831	-3.054E-14	0.
43	0.43006	SLV7-NL	NonStatic	Min	-581.413	-262.831	-3.080E-14	0.
43	0.86012	SLV7-NL	NonStatic	Min	-566.337	-221.947	-2.579E-14	0.
43	0.86012	SLV7-NL	NonStatic	Min	-566.337	-221.947	-2.604E-14	0.
43	1.29018	SLV7-NL	NonStatic	Min	-552.14	-182.625	-2.122E-14	0.
43	1.29018	SLV7-NL	NonStatic	Min	-552.14	-182.625	-2.143E-14	0.
43	1.50521	SLV7-NL	NonStatic	Min	-545.371	-163.55	-1.910E-14	0.
43	1.72024	SLV7-NL	NonStatic	Min	-538.821	-144.866	-1.681E-14	0.
43	1.72024	SLV7-NL	NonStatic	Min	-538.821	-144.866	-1.699E-14	0.
43	2.1503	SLV7-NL	NonStatic	Min	-526.381	-108.668	-1.255E-14	0.
43	2.1503	SLV7-NL	NonStatic	Min	-526.381	-108.668	-1.268E-14	0.
43	2.58036	SLV7-NL	NonStatic	Min	-514.818	-74.031	-8.434E-15	0.
43	2.58036	SLV7-NL	NonStatic	Min	-514.818	-74.031	-8.468E-15	0.
43	3.01042	SLV7-NL	NonStatic	Min	-504.134	-40.957	-4.417E-15	0.

Table: Element Forces - Frames, Part 1 of 2

Frame	Station	OutputCase	CaseType	StepType	P	V2	V3	T
	m				KN	KN	KN	KN-m
43	0.	SLV8-NL	NonStatic	Max	-604.566	-289.137	-3.382E-14	0.
43	0.43006	SLV8-NL	NonStatic	Max	-588.613	-252.521	-2.934E-14	0.
43	0.43006	SLV8-NL	NonStatic	Max	-588.613	-248.714	-2.912E-14	0.
43	0.86012	SLV8-NL	NonStatic	Max	-573.538	-213.609	-2.482E-14	0.
43	0.86012	SLV8-NL	NonStatic	Max	-573.539	-209.506	-2.454E-14	0.
43	1.29018	SLV8-NL	NonStatic	Max	-559.341	-175.911	-2.043E-14	0.
43	1.29018	SLV8-NL	NonStatic	Max	-559.342	-171.546	-2.009E-14	0.
43	1.50521	SLV8-NL	NonStatic	Max	-552.573	-155.315	-1.810E-14	0.
43	1.72024	SLV8-NL	NonStatic	Max	-546.023	-139.461	-1.616E-14	0.
43	1.72024	SLV8-NL	NonStatic	Max	-546.023	-134.866	-1.576E-14	0.
43	2.1503	SLV8-NL	NonStatic	Max	-533.583	-104.291	-1.202E-14	0.
43	2.1503	SLV8-NL	NonStatic	Max	-533.583	-99.497	-1.153E-14	0.
43	2.58036	SLV8-NL	NonStatic	Max	-522.02	-70.432	-7.970E-15	0.
43	2.58036	SLV8-NL	NonStatic	Max	-522.021	-65.471	-7.369E-15	0.
43	3.01042	SLV8-NL	NonStatic	Max	-511.336	-37.916	-3.994E-15	0.
43	0.	SLV8-NL	NonStatic	Min	-604.566	-289.137	-3.382E-14	0.
43	0.43006	SLV8-NL	NonStatic	Min	-588.613	-252.521	-2.934E-14	0.
43	0.43006	SLV8-NL	NonStatic	Min	-588.613	-248.714	-2.912E-14	0.
43	0.86012	SLV8-NL	NonStatic	Min	-573.538	-213.609	-2.482E-14	0.
43	0.86012	SLV8-NL	NonStatic	Min	-573.539	-209.506	-2.454E-14	0.
43	1.29018	SLV8-NL	NonStatic	Min	-559.341	-175.911	-2.043E-14	0.
43	1.29018	SLV8-NL	NonStatic	Min	-559.342	-171.546	-2.009E-14	0.
43	1.50521	SLV8-NL	NonStatic	Min	-552.573	-155.315	-1.810E-14	0.
43	1.72024	SLV8-NL	NonStatic	Min	-546.023	-139.461	-1.616E-14	0.
43	1.72024	SLV8-NL	NonStatic	Min	-546.023	-134.866	-1.576E-14	0.
43	2.1503	SLV8-NL	NonStatic	Min	-533.583	-104.291	-1.202E-14	0.
43	2.1503	SLV8-NL	NonStatic	Min	-533.583	-99.497	-1.153E-14	0.
43	2.58036	SLV8-NL	NonStatic	Min	-522.02	-70.432	-7.970E-15	0.
43	2.58036	SLV8-NL	NonStatic	Min	-522.021	-65.471	-7.369E-15	0.
43	3.01042	SLV8-NL	NonStatic	Min	-511.336	-37.916	-3.994E-15	0.
43	0.	SLV9-NL	NonStatic	Max	-590.888	-341.355	-4.000E-14	0.
43	0.43006	SLV9-NL	NonStatic	Max	-574.386	-295.241	-3.436E-14	0.
43	0.43006	SLV9-NL	NonStatic	Max	-574.386	-295.241	-3.466E-14	0.
43	0.86012	SLV9-NL	NonStatic	Max	-558.793	-250.578	-2.919E-14	0.
43	0.86012	SLV9-NL	NonStatic	Max	-558.793	-250.578	-2.947E-14	0.
43	1.29018	SLV9-NL	NonStatic	Max	-544.108	-207.364	-2.418E-14	0.
43	1.29018	SLV9-NL	NonStatic	Max	-544.108	-207.364	-2.443E-14	0.
43	1.50521	SLV9-NL	NonStatic	Max	-537.106	-186.3	-2.185E-14	0.
43	1.72024	SLV9-NL	NonStatic	Max	-530.331	-165.599	-1.932E-14	0.
43	1.72024	SLV9-NL	NonStatic	Max	-530.331	-165.599	-1.955E-14	0.
43	2.1503	SLV9-NL	NonStatic	Max	-517.463	-125.285	-1.461E-14	0.
43	2.1503	SLV9-NL	NonStatic	Max	-517.463	-125.285	-1.479E-14	0.
43	2.58036	SLV9-NL	NonStatic	Max	-505.503	-86.42	-1.003E-14	0.
43	2.58036	SLV9-NL	NonStatic	Max	-505.503	-86.42	-1.014E-14	0.
43	3.01042	SLV9-NL	NonStatic	Max	-494.451	-49.004	-5.560E-15	0.
43	0.	SLV9-NL	NonStatic	Min	-590.888	-341.355	-4.000E-14	0.
43	0.43006	SLV9-NL	NonStatic	Min	-574.386	-295.241	-3.436E-14	0.
43	0.43006	SLV9-NL	NonStatic	Min	-574.386	-295.241	-3.466E-14	0.
43	0.86012	SLV9-NL	NonStatic	Min	-558.793	-250.578	-2.919E-14	0.
43	0.86012	SLV9-NL	NonStatic	Min	-558.793	-250.578	-2.947E-14	0.
43	1.29018	SLV9-NL	NonStatic	Min	-544.108	-207.364	-2.418E-14	0.
43	1.29018	SLV9-NL	NonStatic	Min	-544.108	-207.364	-2.443E-14	0.
43	1.50521	SLV9-NL	NonStatic	Min	-537.106	-186.3	-2.185E-14	0.
43	1.72024	SLV9-NL	NonStatic	Min	-530.331	-165.599	-1.932E-14	0.

Table: Element Forces - Frames, Part 1 of 2

Frame	Station	OutputCase	CaseType	StepType	P	V2	V3	T
	m				KN	KN	KN	KN-m
43	1.72024	SLV9-NL	NonStatic	Min	-530.331	-165.599	-1.955E-14	0.
43	2.1503	SLV9-NL	NonStatic	Min	-517.463	-125.285	-1.461E-14	0.
43	2.1503	SLV9-NL	NonStatic	Min	-517.463	-125.285	-1.479E-14	0.
43	2.58036	SLV9-NL	NonStatic	Min	-505.503	-86.42	-1.003E-14	0.
43	2.58036	SLV9-NL	NonStatic	Min	-505.503	-86.42	-1.014E-14	0.
43	3.01042	SLV9-NL	NonStatic	Min	-494.451	-49.004	-5.560E-15	0.
43	0.	SLV10-NL	NonStatic	Max	-597.924	-261.853	-3.060E-14	0.
43	0.43006	SLV10-NL	NonStatic	Max	-581.423	-228.906	-2.656E-14	0.
43	0.43006	SLV10-NL	NonStatic	Max	-581.423	-225.098	-2.632E-14	0.
43	0.86012	SLV10-NL	NonStatic	Max	-565.83	-193.773	-2.248E-14	0.
43	0.86012	SLV10-NL	NonStatic	Max	-565.831	-189.518	-2.216E-14	0.
43	1.29018	SLV10-NL	NonStatic	Max	-551.146	-159.815	-1.852E-14	0.
43	1.29018	SLV10-NL	NonStatic	Max	-551.146	-155.144	-1.811E-14	0.
43	1.50521	SLV10-NL	NonStatic	Max	-544.144	-140.901	-1.637E-14	0.
43	1.72024	SLV10-NL	NonStatic	Max	-537.37	-127.064	-1.468E-14	0.
43	1.72024	SLV10-NL	NonStatic	Max	-537.37	-122.012	-1.418E-14	0.
43	2.1503	SLV10-NL	NonStatic	Max	-524.502	-95.553	-1.094E-14	0.
43	2.1503	SLV10-NL	NonStatic	Max	-524.503	-90.153	-1.035E-14	0.
43	2.58036	SLV10-NL	NonStatic	Max	-512.543	-65.316	-7.310E-15	0.
43	2.58036	SLV10-NL	NonStatic	Max	-512.543	-59.603	-6.582E-15	0.
43	3.01042	SLV10-NL	NonStatic	Max	-501.492	-36.389	-3.739E-15	0.
43	0.	SLV10-NL	NonStatic	Min	-597.924	-261.853	-3.060E-14	0.
43	0.43006	SLV10-NL	NonStatic	Min	-581.423	-228.906	-2.656E-14	0.
43	0.43006	SLV10-NL	NonStatic	Min	-581.423	-225.098	-2.632E-14	0.
43	0.86012	SLV10-NL	NonStatic	Min	-565.83	-193.773	-2.248E-14	0.
43	0.86012	SLV10-NL	NonStatic	Min	-565.831	-189.518	-2.216E-14	0.
43	1.29018	SLV10-NL	NonStatic	Min	-551.146	-159.815	-1.852E-14	0.
43	1.29018	SLV10-NL	NonStatic	Min	-551.146	-155.144	-1.811E-14	0.
43	1.50521	SLV10-NL	NonStatic	Min	-544.144	-140.901	-1.637E-14	0.
43	1.72024	SLV10-NL	NonStatic	Min	-537.37	-127.064	-1.468E-14	0.
43	1.72024	SLV10-NL	NonStatic	Min	-537.37	-122.012	-1.418E-14	0.
43	2.1503	SLV10-NL	NonStatic	Min	-524.502	-95.553	-1.094E-14	0.
43	2.1503	SLV10-NL	NonStatic	Min	-524.503	-90.153	-1.035E-14	0.
43	2.58036	SLV10-NL	NonStatic	Min	-512.543	-65.316	-7.310E-15	0.
43	2.58036	SLV10-NL	NonStatic	Min	-512.543	-59.603	-6.582E-15	0.
43	3.01042	SLV10-NL	NonStatic	Min	-501.492	-36.389	-3.739E-15	0.
43	0.	SLV11-NL	NonStatic	Max	-606.824	-341.817	-4.005E-14	0.
43	0.43006	SLV11-NL	NonStatic	Max	-589.853	-295.704	-3.440E-14	0.
43	0.43006	SLV11-NL	NonStatic	Max	-589.853	-295.704	-3.470E-14	0.
43	0.86012	SLV11-NL	NonStatic	Max	-573.815	-251.04	-2.923E-14	0.
43	0.86012	SLV11-NL	NonStatic	Max	-573.815	-251.04	-2.951E-14	0.
43	1.29018	SLV11-NL	NonStatic	Max	-558.712	-207.826	-2.421E-14	0.
43	1.29018	SLV11-NL	NonStatic	Max	-558.712	-207.826	-2.447E-14	0.
43	1.50521	SLV11-NL	NonStatic	Max	-551.511	-186.762	-2.189E-14	0.
43	1.72024	SLV11-NL	NonStatic	Max	-544.543	-166.061	-1.935E-14	0.
43	1.72024	SLV11-NL	NonStatic	Max	-544.543	-166.062	-1.958E-14	0.
43	2.1503	SLV11-NL	NonStatic	Max	-531.308	-125.747	-1.464E-14	0.
43	2.1503	SLV11-NL	NonStatic	Max	-531.308	-125.747	-1.481E-14	0.
43	2.58036	SLV11-NL	NonStatic	Max	-519.008	-86.882	-1.005E-14	0.
43	2.58036	SLV11-NL	NonStatic	Max	-519.008	-86.882	-1.015E-14	0.
43	3.01042	SLV11-NL	NonStatic	Max	-507.641	-49.467	-5.571E-15	0.
43	0.	SLV11-NL	NonStatic	Min	-606.824	-341.817	-4.005E-14	0.
43	0.43006	SLV11-NL	NonStatic	Min	-589.853	-295.704	-3.440E-14	0.
43	0.43006	SLV11-NL	NonStatic	Min	-589.853	-295.704	-3.470E-14	0.

Table: Element Forces - Frames, Part 1 of 2

Frame	Station	OutputCase	CaseType	StepType	P	V2	V3	T
	m				KN	KN	KN	KN-m
43	0.86012	SLV11-NL	NonStatic	Min	-573.815	-251.04	-2.923E-14	0.
43	0.86012	SLV11-NL	NonStatic	Min	-573.815	-251.04	-2.951E-14	0.
43	1.29018	SLV11-NL	NonStatic	Min	-558.712	-207.826	-2.421E-14	0.
43	1.29018	SLV11-NL	NonStatic	Min	-558.712	-207.826	-2.447E-14	0.
43	1.50521	SLV11-NL	NonStatic	Min	-551.511	-186.762	-2.189E-14	0.
43	1.72024	SLV11-NL	NonStatic	Min	-544.543	-166.061	-1.935E-14	0.
43	1.72024	SLV11-NL	NonStatic	Min	-544.543	-166.062	-1.958E-14	0.
43	2.1503	SLV11-NL	NonStatic	Min	-531.308	-125.747	-1.464E-14	0.
43	2.1503	SLV11-NL	NonStatic	Min	-531.308	-125.747	-1.481E-14	0.
43	2.58036	SLV11-NL	NonStatic	Min	-519.008	-86.882	-1.005E-14	0.
43	2.58036	SLV11-NL	NonStatic	Min	-519.008	-86.882	-1.015E-14	0.
43	3.01042	SLV11-NL	NonStatic	Min	-507.641	-49.467	-5.571E-15	0.
43	0.	SLV12-NL	NonStatic	Max	-613.839	-262.368	-3.065E-14	0.
43	0.43006	SLV12-NL	NonStatic	Max	-596.867	-229.421	-2.661E-14	0.
43	0.43006	SLV12-NL	NonStatic	Max	-596.868	-225.64	-2.637E-14	0.
43	0.86012	SLV12-NL	NonStatic	Max	-580.831	-194.315	-2.253E-14	0.
43	0.86012	SLV12-NL	NonStatic	Max	-580.831	-190.075	-2.221E-14	0.
43	1.29018	SLV12-NL	NonStatic	Max	-565.728	-160.372	-1.857E-14	0.
43	1.29018	SLV12-NL	NonStatic	Max	-565.729	-155.706	-1.816E-14	0.
43	1.50521	SLV12-NL	NonStatic	Max	-558.527	-141.462	-1.642E-14	0.
43	1.72024	SLV12-NL	NonStatic	Max	-551.56	-127.625	-1.472E-14	0.
43	1.72024	SLV12-NL	NonStatic	Max	-551.56	-122.568	-1.423E-14	0.
43	2.1503	SLV12-NL	NonStatic	Max	-538.326	-96.109	-1.099E-14	0.
43	2.1503	SLV12-NL	NonStatic	Max	-538.326	-90.696	-1.038E-14	0.
43	2.58036	SLV12-NL	NonStatic	Max	-526.026	-65.859	-7.343E-15	0.
43	2.58036	SLV12-NL	NonStatic	Max	-526.026	-60.128	-6.601E-15	0.
43	3.01042	SLV12-NL	NonStatic	Max	-514.66	-36.914	-3.758E-15	0.
43	0.	SLV12-NL	NonStatic	Min	-613.839	-262.368	-3.065E-14	0.
43	0.43006	SLV12-NL	NonStatic	Min	-596.867	-229.421	-2.661E-14	0.
43	0.43006	SLV12-NL	NonStatic	Min	-596.868	-225.64	-2.637E-14	0.
43	0.86012	SLV12-NL	NonStatic	Min	-580.831	-194.315	-2.253E-14	0.
43	0.86012	SLV12-NL	NonStatic	Min	-580.831	-190.075	-2.221E-14	0.
43	1.29018	SLV12-NL	NonStatic	Min	-565.728	-160.372	-1.857E-14	0.
43	1.29018	SLV12-NL	NonStatic	Min	-565.729	-155.706	-1.816E-14	0.
43	1.50521	SLV12-NL	NonStatic	Min	-558.527	-141.462	-1.642E-14	0.
43	1.72024	SLV12-NL	NonStatic	Min	-551.56	-127.625	-1.472E-14	0.
43	1.72024	SLV12-NL	NonStatic	Min	-551.56	-122.568	-1.423E-14	0.
43	2.1503	SLV12-NL	NonStatic	Min	-538.326	-96.109	-1.099E-14	0.
43	2.1503	SLV12-NL	NonStatic	Min	-538.326	-90.696	-1.038E-14	0.
43	2.58036	SLV12-NL	NonStatic	Min	-526.026	-65.859	-7.343E-15	0.
43	2.58036	SLV12-NL	NonStatic	Min	-526.026	-60.128	-6.601E-15	0.
43	3.01042	SLV12-NL	NonStatic	Min	-514.66	-36.914	-3.758E-15	0.
43	0.	SLV13-NL	NonStatic	Max	-574.897	-298.711	-3.498E-14	0.
43	0.43006	SLV13-NL	NonStatic	Max	-558.943	-257.206	-2.989E-14	0.
43	0.43006	SLV13-NL	NonStatic	Max	-558.943	-257.206	-3.015E-14	0.
43	0.86012	SLV13-NL	NonStatic	Max	-543.868	-217.211	-2.525E-14	0.
43	0.86012	SLV13-NL	NonStatic	Max	-543.868	-217.211	-2.549E-14	0.
43	1.29018	SLV13-NL	NonStatic	Max	-529.671	-178.726	-2.078E-14	0.
43	1.29018	SLV13-NL	NonStatic	Max	-529.671	-178.726	-2.099E-14	0.
43	1.50521	SLV13-NL	NonStatic	Max	-522.902	-160.049	-1.870E-14	0.
43	1.72024	SLV13-NL	NonStatic	Max	-516.352	-141.75	-1.646E-14	0.
43	1.72024	SLV13-NL	NonStatic	Max	-516.352	-141.75	-1.664E-14	0.
43	2.1503	SLV13-NL	NonStatic	Max	-503.911	-106.285	-1.230E-14	0.
43	2.1503	SLV13-NL	NonStatic	Max	-503.911	-106.282	-1.242E-14	0.

Table: Element Forces - Frames, Part 1 of 2

Frame	Station	OutputCase	CaseType	StepType	P	V2	V3	T
	m				KN	KN	KN	KN-m
43	2.58036	SLV13-NL	NonStatic	Max	-492.349	-72.327	-8.263E-15	0.
43	2.58036	SLV13-NL	NonStatic	Max	-492.349	-72.327	-8.306E-15	0.
43	3.01042	SLV13-NL	NonStatic	Max	-481.664	-39.882	-4.333E-15	0.
43	0.	SLV13-NL	NonStatic	Min	-574.897	-298.711	-3.498E-14	0.
43	0.43006	SLV13-NL	NonStatic	Min	-558.943	-257.206	-2.989E-14	0.
43	0.43006	SLV13-NL	NonStatic	Min	-558.943	-257.206	-3.015E-14	0.
43	0.86012	SLV13-NL	NonStatic	Min	-543.868	-217.211	-2.525E-14	0.
43	0.86012	SLV13-NL	NonStatic	Min	-543.868	-217.211	-2.549E-14	0.
43	1.29018	SLV13-NL	NonStatic	Min	-529.671	-178.726	-2.078E-14	0.
43	1.29018	SLV13-NL	NonStatic	Min	-529.671	-178.726	-2.099E-14	0.
43	1.50521	SLV13-NL	NonStatic	Min	-522.902	-160.049	-1.870E-14	0.
43	1.72024	SLV13-NL	NonStatic	Min	-516.352	-141.75	-1.646E-14	0.
43	1.72024	SLV13-NL	NonStatic	Min	-516.352	-141.75	-1.664E-14	0.
43	2.1503	SLV13-NL	NonStatic	Min	-503.911	-106.285	-1.230E-14	0.
43	2.1503	SLV13-NL	NonStatic	Min	-503.911	-106.282	-1.242E-14	0.
43	2.58036	SLV13-NL	NonStatic	Min	-492.349	-72.327	-8.263E-15	0.
43	2.58036	SLV13-NL	NonStatic	Min	-492.349	-72.327	-8.306E-15	0.
43	3.01042	SLV13-NL	NonStatic	Min	-481.664	-39.882	-4.333E-15	0.
43	0.	SLV14-NL	NonStatic	Max	-576.797	-275.8	-3.226E-14	0.
43	0.43006	SLV14-NL	NonStatic	Max	-560.843	-238.244	-2.766E-14	0.
43	0.43006	SLV14-NL	NonStatic	Max	-560.844	-237.273	-2.778E-14	0.
43	0.86012	SLV14-NL	NonStatic	Max	-545.768	-201.28	-2.337E-14	0.
43	0.86012	SLV14-NL	NonStatic	Max	-545.768	-200.053	-2.344E-14	0.
43	1.29018	SLV14-NL	NonStatic	Max	-531.571	-165.622	-1.922E-14	0.
43	1.29018	SLV14-NL	NonStatic	Max	-531.571	-164.172	-1.923E-14	0.
43	1.50521	SLV14-NL	NonStatic	Max	-524.802	-147.542	-1.719E-14	0.
43	1.72024	SLV14-NL	NonStatic	Max	-518.253	-131.302	-1.520E-14	0.
43	1.72024	SLV14-NL	NonStatic	Max	-518.253	-129.66	-1.515E-14	0.
43	2.1503	SLV14-NL	NonStatic	Max	-505.812	-98.352	-1.132E-14	0.
43	2.1503	SLV14-NL	NonStatic	Max	-505.812	-96.549	-1.119E-14	0.
43	2.58036	SLV14-NL	NonStatic	Max	-494.249	-66.802	-7.546E-15	0.
43	2.58036	SLV14-NL	NonStatic	Max	-494.25	-64.868	-7.313E-15	0.
43	3.01042	SLV14-NL	NonStatic	Max	-483.565	-36.683	-3.862E-15	0.
43	0.	SLV14-NL	NonStatic	Min	-576.797	-275.8	-3.226E-14	0.
43	0.43006	SLV14-NL	NonStatic	Min	-560.843	-238.244	-2.766E-14	0.
43	0.43006	SLV14-NL	NonStatic	Min	-560.844	-237.273	-2.778E-14	0.
43	0.86012	SLV14-NL	NonStatic	Min	-545.768	-201.28	-2.337E-14	0.
43	0.86012	SLV14-NL	NonStatic	Min	-545.768	-200.053	-2.344E-14	0.
43	1.29018	SLV14-NL	NonStatic	Min	-531.571	-165.622	-1.922E-14	0.
43	1.29018	SLV14-NL	NonStatic	Min	-531.571	-164.172	-1.923E-14	0.
43	1.50521	SLV14-NL	NonStatic	Min	-524.802	-147.542	-1.719E-14	0.
43	1.72024	SLV14-NL	NonStatic	Min	-518.253	-131.302	-1.520E-14	0.
43	1.72024	SLV14-NL	NonStatic	Min	-518.253	-129.66	-1.515E-14	0.
43	2.1503	SLV14-NL	NonStatic	Min	-505.812	-98.352	-1.132E-14	0.
43	2.1503	SLV14-NL	NonStatic	Min	-505.812	-96.549	-1.119E-14	0.
43	2.58036	SLV14-NL	NonStatic	Min	-494.249	-66.802	-7.546E-15	0.
43	2.58036	SLV14-NL	NonStatic	Min	-494.25	-64.868	-7.313E-15	0.
43	3.01042	SLV14-NL	NonStatic	Min	-483.565	-36.683	-3.862E-15	0.
43	0.	SLV15-NL	NonStatic	Max	-628.061	-301.307	-3.525E-14	0.
43	0.43006	SLV15-NL	NonStatic	Max	-610.541	-259.802	-3.016E-14	0.
43	0.43006	SLV15-NL	NonStatic	Max	-610.541	-259.802	-3.042E-14	0.
43	0.86012	SLV15-NL	NonStatic	Max	-593.985	-219.807	-2.552E-14	0.
43	0.86012	SLV15-NL	NonStatic	Max	-593.985	-219.742	-2.574E-14	0.
43	1.29018	SLV15-NL	NonStatic	Max	-578.394	-181.257	-2.103E-14	0.

Table: Element Forces - Frames, Part 1 of 2

Frame	Station	OutputCase	CaseType	StepType	P	V2	V3	T
	m				KN	KN	KN	KN-m
43	1.29018	SLV15-NL	NonStatic	Max	-578.394	-181.082	-2.121E-14	0.
43	1.50521	SLV15-NL	NonStatic	Max	-570.96	-162.406	-1.892E-14	0.
43	1.72024	SLV15-NL	NonStatic	Max	-563.767	-144.107	-1.668E-14	0.
43	1.72024	SLV15-NL	NonStatic	Max	-563.767	-143.858	-1.681E-14	0.
43	2.1503	SLV15-NL	NonStatic	Max	-550.105	-108.393	-1.247E-14	0.
43	2.1503	SLV15-NL	NonStatic	Max	-550.105	-108.102	-1.254E-14	0.
43	2.58036	SLV15-NL	NonStatic	Max	-537.407	-74.147	-8.377E-15	0.
43	2.58036	SLV15-NL	NonStatic	Max	-537.407	-73.851	-8.347E-15	0.
43	3.01042	SLV15-NL	NonStatic	Max	-525.673	-41.406	-4.373E-15	0.
43	0.	SLV15-NL	NonStatic	Min	-628.061	-301.307	-3.525E-14	0.
43	0.43006	SLV15-NL	NonStatic	Min	-610.541	-259.802	-3.016E-14	0.
43	0.43006	SLV15-NL	NonStatic	Min	-610.541	-259.802	-3.042E-14	0.
43	0.86012	SLV15-NL	NonStatic	Min	-593.985	-219.807	-2.552E-14	0.
43	0.86012	SLV15-NL	NonStatic	Min	-593.985	-219.742	-2.574E-14	0.
43	1.29018	SLV15-NL	NonStatic	Min	-578.394	-181.257	-2.103E-14	0.
43	1.29018	SLV15-NL	NonStatic	Min	-578.394	-181.082	-2.121E-14	0.
43	1.50521	SLV15-NL	NonStatic	Min	-570.96	-162.406	-1.892E-14	0.
43	1.72024	SLV15-NL	NonStatic	Min	-563.767	-144.107	-1.668E-14	0.
43	1.72024	SLV15-NL	NonStatic	Min	-563.767	-143.858	-1.681E-14	0.
43	2.1503	SLV15-NL	NonStatic	Min	-550.105	-108.393	-1.247E-14	0.
43	2.1503	SLV15-NL	NonStatic	Min	-550.105	-108.102	-1.254E-14	0.
43	2.58036	SLV15-NL	NonStatic	Min	-537.407	-74.147	-8.377E-15	0.
43	2.58036	SLV15-NL	NonStatic	Min	-537.407	-73.851	-8.347E-15	0.
43	3.01042	SLV15-NL	NonStatic	Min	-525.673	-41.406	-4.373E-15	0.
43	0.	SLV16-NL	NonStatic	Max	-629.815	-278.661	-3.257E-14	0.
43	0.43006	SLV16-NL	NonStatic	Max	-612.295	-241.106	-2.797E-14	0.
43	0.43006	SLV16-NL	NonStatic	Max	-612.295	-240.05	-2.807E-14	0.
43	0.86012	SLV16-NL	NonStatic	Max	-595.74	-204.057	-2.366E-14	0.
43	0.86012	SLV16-NL	NonStatic	Max	-595.74	-202.712	-2.370E-14	0.
43	1.29018	SLV16-NL	NonStatic	Max	-580.149	-168.28	-1.948E-14	0.
43	1.29018	SLV16-NL	NonStatic	Max	-580.149	-166.68	-1.946E-14	0.
43	1.50521	SLV16-NL	NonStatic	Max	-572.715	-150.05	-1.743E-14	0.
43	1.72024	SLV16-NL	NonStatic	Max	-565.522	-133.81	-1.544E-14	0.
43	1.72024	SLV16-NL	NonStatic	Max	-565.522	-131.993	-1.535E-14	0.
43	2.1503	SLV16-NL	NonStatic	Max	-551.86	-100.684	-1.151E-14	0.
43	2.1503	SLV16-NL	NonStatic	Max	-551.86	-98.684	-1.134E-14	0.
43	2.58036	SLV16-NL	NonStatic	Max	-539.162	-68.938	-7.698E-15	0.
43	2.58036	SLV16-NL	NonStatic	Max	-539.162	-66.794	-7.403E-15	0.
43	3.01042	SLV16-NL	NonStatic	Max	-527.429	-38.61	-3.951E-15	0.
43	0.	SLV16-NL	NonStatic	Min	-629.815	-278.661	-3.257E-14	0.
43	0.43006	SLV16-NL	NonStatic	Min	-612.295	-241.106	-2.797E-14	0.
43	0.43006	SLV16-NL	NonStatic	Min	-612.295	-240.05	-2.807E-14	0.
43	0.86012	SLV16-NL	NonStatic	Min	-595.74	-204.057	-2.366E-14	0.
43	0.86012	SLV16-NL	NonStatic	Min	-595.74	-202.712	-2.370E-14	0.
43	1.29018	SLV16-NL	NonStatic	Min	-580.149	-168.28	-1.948E-14	0.
43	1.29018	SLV16-NL	NonStatic	Min	-580.149	-166.68	-1.946E-14	0.
43	1.50521	SLV16-NL	NonStatic	Min	-572.715	-150.05	-1.743E-14	0.
43	1.72024	SLV16-NL	NonStatic	Min	-565.522	-133.81	-1.544E-14	0.
43	1.72024	SLV16-NL	NonStatic	Min	-565.522	-131.993	-1.535E-14	0.
43	2.1503	SLV16-NL	NonStatic	Min	-551.86	-100.684	-1.151E-14	0.
43	2.1503	SLV16-NL	NonStatic	Min	-551.86	-98.684	-1.134E-14	0.
43	2.58036	SLV16-NL	NonStatic	Min	-539.162	-68.938	-7.698E-15	0.
43	2.58036	SLV16-NL	NonStatic	Min	-539.162	-66.794	-7.403E-15	0.
43	3.01042	SLV16-NL	NonStatic	Min	-527.429	-38.61	-3.951E-15	0.

Table: Element Forces - Frames, Part 1 of 2

Frame	Station	OutputCase	CaseType	StepType	P	V2	V3	T
	m				KN	KN	KN	KN-m
44	0.	SLU 1-NL	NonStatic	Max	-754.512	-50.093	-7.234E-15	0.
44	0.4734	SLU 1-NL	NonStatic	Max	-738.362	-4.091	-1.600E-15	0.
44	0.4734	SLU 1-NL	NonStatic	Max	-738.362	-2.146	-1.078E-15	0.
44	0.94681	SLU 1-NL	NonStatic	Max	-720.674	41.291	4.242E-15	0.
44	0.94681	SLU 1-NL	NonStatic	Max	-720.674	43.16	4.476E-15	0.
44	1.42021	SLU 1-NL	NonStatic	Max	-701.447	84.033	9.482E-15	0.
44	1.42021	SLU 1-NL	NonStatic	Max	-701.447	85.78	9.566E-15	0.
44	1.89361	SLU 1-NL	NonStatic	Max	-680.683	124.088	1.426E-14	0.
44	1.89361	SLU 1-NL	NonStatic	Max	-680.683	125.669	1.426E-14	0.
44	2.36702	SLU 1-NL	NonStatic	Max	-658.38	161.413	1.863E-14	0.
44	2.36702	SLU 1-NL	NonStatic	Max	-658.38	162.789	1.858E-14	0.
44	2.84042	SLU 1-NL	NonStatic	Max	-634.539	195.969	2.264E-14	0.
44	0.	SLU 1-NL	NonStatic	Min	-754.512	-50.093	-7.234E-15	0.
44	0.4734	SLU 1-NL	NonStatic	Min	-738.362	-4.091	-1.600E-15	0.
44	0.4734	SLU 1-NL	NonStatic	Min	-738.362	-2.146	-1.078E-15	0.
44	0.94681	SLU 1-NL	NonStatic	Min	-720.674	41.291	4.242E-15	0.
44	0.94681	SLU 1-NL	NonStatic	Min	-720.674	43.16	4.476E-15	0.
44	1.42021	SLU 1-NL	NonStatic	Min	-701.447	84.033	9.482E-15	0.
44	1.42021	SLU 1-NL	NonStatic	Min	-701.447	85.78	9.566E-15	0.
44	1.89361	SLU 1-NL	NonStatic	Min	-680.683	124.088	1.426E-14	0.
44	1.89361	SLU 1-NL	NonStatic	Min	-680.683	125.669	1.426E-14	0.
44	2.36702	SLU 1-NL	NonStatic	Min	-658.38	161.413	1.863E-14	0.
44	2.36702	SLU 1-NL	NonStatic	Min	-658.38	162.789	1.858E-14	0.
44	2.84042	SLU 1-NL	NonStatic	Min	-634.539	195.969	2.264E-14	0.
44	0.	SLU 2-NL	NonStatic	Max	-754.513	-38.377	-6.411E-15	0.
44	0.4734	SLU 2-NL	NonStatic	Max	-738.363	-7.645	-2.648E-15	0.
44	0.4734	SLU 2-NL	NonStatic	Max	-738.362	-4.791	-1.793E-15	0.
44	0.94681	SLU 2-NL	NonStatic	Max	-720.674	23.968	1.729E-15	0.
44	0.94681	SLU 2-NL	NonStatic	Max	-720.674	26.709	2.255E-15	0.
44	1.42021	SLU 2-NL	NonStatic	Max	-701.448	53.495	5.535E-15	0.
44	1.42021	SLU 2-NL	NonStatic	Max	-701.448	56.045	5.880E-15	0.
44	1.89361	SLU 2-NL	NonStatic	Max	-680.683	80.859	8.919E-15	0.
44	1.89361	SLU 2-NL	NonStatic	Max	-680.683	83.153	9.149E-15	0.
44	2.36702	SLU 2-NL	NonStatic	Max	-658.38	105.995	1.195E-14	0.
44	2.36702	SLU 2-NL	NonStatic	Max	-658.38	107.98	1.210E-14	0.
44	2.84042	SLU 2-NL	NonStatic	Max	-634.54	128.849	1.465E-14	0.
44	0.	SLU 2-NL	NonStatic	Min	-754.513	-38.377	-6.411E-15	0.
44	0.4734	SLU 2-NL	NonStatic	Min	-738.363	-7.645	-2.648E-15	0.
44	0.4734	SLU 2-NL	NonStatic	Min	-738.362	-4.791	-1.793E-15	0.
44	0.94681	SLU 2-NL	NonStatic	Min	-720.674	23.968	1.729E-15	0.
44	0.94681	SLU 2-NL	NonStatic	Min	-720.674	26.709	2.255E-15	0.
44	1.42021	SLU 2-NL	NonStatic	Min	-701.448	53.495	5.535E-15	0.
44	1.42021	SLU 2-NL	NonStatic	Min	-701.448	56.045	5.880E-15	0.
44	1.89361	SLU 2-NL	NonStatic	Min	-680.683	80.859	8.919E-15	0.
44	1.89361	SLU 2-NL	NonStatic	Min	-680.683	83.153	9.149E-15	0.
44	2.36702	SLU 2-NL	NonStatic	Min	-658.38	105.995	1.195E-14	0.
44	2.36702	SLU 2-NL	NonStatic	Min	-658.38	107.98	1.210E-14	0.
44	2.84042	SLU 2-NL	NonStatic	Min	-634.54	128.849	1.465E-14	0.
44	0.	SLU 3-NL	NonStatic	Max	-488.713	-49.211	-6.079E-15	0.
44	0.4734	SLU 3-NL	NonStatic	Max	-476.29	-3.209	-4.452E-16	0.
44	0.4734	SLU 3-NL	NonStatic	Max	-476.29	-2.927	-4.511E-16	0.
44	0.94681	SLU 3-NL	NonStatic	Max	-462.683	40.51	4.868E-15	0.
44	0.94681	SLU 3-NL	NonStatic	Max	-462.683	40.781	4.717E-15	0.
44	1.42021	SLU 3-NL	NonStatic	Max	-447.894	81.654	9.722E-15	0.

Table: Element Forces - Frames, Part 1 of 2

Frame	Station	OutputCase	CaseType	StepType	P	V2	V3	T
	m				KN	KN	KN	KN-m
44	1.42021	SLU 3-NL	NonStatic	Max	-447.894	81.915	9.506E-15	0.
44	1.89361	SLU 3-NL	NonStatic	Max	-431.921	120.224	1.420E-14	0.
44	1.89361	SLU 3-NL	NonStatic	Max	-431.921	120.473	1.395E-14	0.
44	2.36702	SLU 3-NL	NonStatic	Max	-414.765	156.217	1.833E-14	0.
44	2.36702	SLU 3-NL	NonStatic	Max	-414.765	156.444	1.808E-14	0.
44	2.84042	SLU 3-NL	NonStatic	Max	-396.427	189.624	2.215E-14	0.
44	0.	SLU 3-NL	NonStatic	Min	-488.713	-49.211	-6.079E-15	0.
44	0.4734	SLU 3-NL	NonStatic	Min	-476.29	-3.209	-4.452E-16	0.
44	0.4734	SLU 3-NL	NonStatic	Min	-476.29	-2.927	-4.511E-16	0.
44	0.94681	SLU 3-NL	NonStatic	Min	-462.683	40.51	4.868E-15	0.
44	0.94681	SLU 3-NL	NonStatic	Min	-462.683	40.781	4.717E-15	0.
44	1.42021	SLU 3-NL	NonStatic	Min	-447.894	81.654	9.722E-15	0.
44	1.42021	SLU 3-NL	NonStatic	Min	-447.894	81.915	9.506E-15	0.
44	1.89361	SLU 3-NL	NonStatic	Min	-431.921	120.224	1.420E-14	0.
44	1.89361	SLU 3-NL	NonStatic	Min	-431.921	120.473	1.395E-14	0.
44	2.36702	SLU 3-NL	NonStatic	Min	-414.765	156.217	1.833E-14	0.
44	2.36702	SLU 3-NL	NonStatic	Min	-414.765	156.444	1.808E-14	0.
44	2.84042	SLU 3-NL	NonStatic	Min	-396.427	189.624	2.215E-14	0.
44	0.	SLU 4-NL	NonStatic	Max	-745.662	-55.629	-7.952E-15	0.
44	0.4734	SLU 4-NL	NonStatic	Max	-729.512	-9.628	-2.319E-15	0.
44	0.4734	SLU 4-NL	NonStatic	Max	-729.512	-9.628	-2.000E-15	0.
44	0.94681	SLU 4-NL	NonStatic	Max	-711.824	33.809	3.320E-15	0.
44	0.94681	SLU 4-NL	NonStatic	Max	-711.824	33.809	3.354E-15	0.
44	1.42021	SLU 4-NL	NonStatic	Max	-692.597	74.682	8.359E-15	0.
44	1.42021	SLU 4-NL	NonStatic	Max	-692.597	74.682	8.253E-15	0.
44	1.89361	SLU 4-NL	NonStatic	Max	-671.833	112.991	1.294E-14	0.
44	1.89361	SLU 4-NL	NonStatic	Max	-671.833	112.991	1.277E-14	0.
44	2.36702	SLU 4-NL	NonStatic	Max	-649.53	148.735	1.715E-14	0.
44	2.36702	SLU 4-NL	NonStatic	Max	-649.53	148.735	1.694E-14	0.
44	2.84042	SLU 4-NL	NonStatic	Max	-625.69	181.915	2.100E-14	0.
44	0.	SLU 4-NL	NonStatic	Min	-745.662	-55.629	-7.952E-15	0.
44	0.4734	SLU 4-NL	NonStatic	Min	-729.512	-9.628	-2.319E-15	0.
44	0.4734	SLU 4-NL	NonStatic	Min	-729.512	-9.628	-2.000E-15	0.
44	0.94681	SLU 4-NL	NonStatic	Min	-711.824	33.809	3.320E-15	0.
44	0.94681	SLU 4-NL	NonStatic	Min	-711.824	33.809	3.354E-15	0.
44	1.42021	SLU 4-NL	NonStatic	Min	-692.597	74.682	8.359E-15	0.
44	1.42021	SLU 4-NL	NonStatic	Min	-692.597	74.682	8.253E-15	0.
44	1.89361	SLU 4-NL	NonStatic	Min	-671.833	112.991	1.294E-14	0.
44	1.89361	SLU 4-NL	NonStatic	Min	-671.833	112.991	1.277E-14	0.
44	2.36702	SLU 4-NL	NonStatic	Min	-649.53	148.735	1.715E-14	0.
44	2.36702	SLU 4-NL	NonStatic	Min	-649.53	148.735	1.694E-14	0.
44	2.84042	SLU 4-NL	NonStatic	Min	-625.69	181.915	2.100E-14	0.
44	0.	SLU 5-NL	NonStatic	Max	-479.589	-55.883	-6.880E-15	0.
44	0.4734	SLU 5-NL	NonStatic	Max	-467.166	-9.882	-1.246E-15	0.
44	0.4734	SLU 5-NL	NonStatic	Max	-467.166	-9.882	-1.271E-15	0.
44	0.94681	SLU 5-NL	NonStatic	Max	-453.56	33.555	4.048E-15	0.
44	0.94681	SLU 5-NL	NonStatic	Max	-453.56	33.555	3.874E-15	0.
44	1.42021	SLU 5-NL	NonStatic	Max	-438.77	74.428	8.879E-15	0.
44	1.42021	SLU 5-NL	NonStatic	Max	-438.77	74.428	8.638E-15	0.
44	1.89361	SLU 5-NL	NonStatic	Max	-422.798	112.736	1.333E-14	0.
44	1.89361	SLU 5-NL	NonStatic	Max	-422.798	112.736	1.306E-14	0.
44	2.36702	SLU 5-NL	NonStatic	Max	-405.642	148.481	1.744E-14	0.
44	2.36702	SLU 5-NL	NonStatic	Max	-405.642	148.481	1.717E-14	0.
44	2.84042	SLU 5-NL	NonStatic	Max	-387.303	181.661	2.123E-14	0.

Table: Element Forces - Frames, Part 1 of 2

Frame	Station	OutputCase	CaseType	StepType	P	V2	V3	T
	m				KN	KN	KN	KN-m
44	0.	SLU 5-NL	NonStatic	Min	-479.589	-55.883	-6.880E-15	0.
44	0.4734	SLU 5-NL	NonStatic	Min	-467.166	-9.882	-1.246E-15	0.
44	0.4734	SLU 5-NL	NonStatic	Min	-467.166	-9.882	-1.271E-15	0.
44	0.94681	SLU 5-NL	NonStatic	Min	-453.56	33.555	4.048E-15	0.
44	0.94681	SLU 5-NL	NonStatic	Min	-453.56	33.555	3.874E-15	0.
44	1.42021	SLU 5-NL	NonStatic	Min	-438.77	74.428	8.879E-15	0.
44	1.42021	SLU 5-NL	NonStatic	Min	-438.77	74.428	8.638E-15	0.
44	1.89361	SLU 5-NL	NonStatic	Min	-422.798	112.736	1.333E-14	0.
44	1.89361	SLU 5-NL	NonStatic	Min	-422.798	112.736	1.306E-14	0.
44	2.36702	SLU 5-NL	NonStatic	Min	-405.642	148.481	1.744E-14	0.
44	2.36702	SLU 5-NL	NonStatic	Min	-405.642	148.481	1.717E-14	0.
44	2.84042	SLU 5-NL	NonStatic	Min	-387.303	181.661	2.123E-14	0.
44	0.	SLU 6-NL	NonStatic	Max	-763.356	-40.928	-6.107E-15	0.
44	0.4734	SLU 6-NL	NonStatic	Max	-747.206	-10.197	-2.344E-15	0.
44	0.4734	SLU 6-NL	NonStatic	Max	-747.208	8.67	2.399E-16	0.
44	0.94681	SLU 6-NL	NonStatic	Max	-729.519	37.43	3.762E-15	0.
44	0.94681	SLU 6-NL	NonStatic	Max	-729.521	56.573	6.094E-15	0.
44	1.42021	SLU 6-NL	NonStatic	Max	-710.294	83.36	9.375E-15	0.
44	1.42021	SLU 6-NL	NonStatic	Max	-710.295	102.731	1.159E-14	0.
44	1.89361	SLU 6-NL	NonStatic	Max	-689.531	127.546	1.463E-14	0.
44	1.89361	SLU 6-NL	NonStatic	Max	-689.532	147.103	1.680E-14	0.
44	2.36702	SLU 6-NL	NonStatic	Max	-667.229	169.945	1.959E-14	0.
44	2.36702	SLU 6-NL	NonStatic	Max	-667.23	189.65	2.174E-14	0.
44	2.84042	SLU 6-NL	NonStatic	Max	-643.389	210.519	2.430E-14	0.
44	0.	SLU 6-NL	NonStatic	Min	-763.356	-40.928	-6.107E-15	0.
44	0.4734	SLU 6-NL	NonStatic	Min	-747.206	-10.197	-2.344E-15	0.
44	0.4734	SLU 6-NL	NonStatic	Min	-747.208	8.67	2.399E-16	0.
44	0.94681	SLU 6-NL	NonStatic	Min	-729.519	37.43	3.762E-15	0.
44	0.94681	SLU 6-NL	NonStatic	Min	-729.521	56.573	6.094E-15	0.
44	1.42021	SLU 6-NL	NonStatic	Min	-710.294	83.36	9.375E-15	0.
44	1.42021	SLU 6-NL	NonStatic	Min	-710.295	102.731	1.159E-14	0.
44	1.89361	SLU 6-NL	NonStatic	Min	-689.531	127.546	1.463E-14	0.
44	1.89361	SLU 6-NL	NonStatic	Min	-689.532	147.103	1.680E-14	0.
44	2.36702	SLU 6-NL	NonStatic	Min	-667.229	169.945	1.959E-14	0.
44	2.36702	SLU 6-NL	NonStatic	Min	-667.23	189.65	2.174E-14	0.
44	2.84042	SLU 6-NL	NonStatic	Min	-643.389	210.519	2.430E-14	0.
44	0.	SLU 7-NL	NonStatic	Max	-497.827	-40.305	-4.934E-15	0.
44	0.4734	SLU 7-NL	NonStatic	Max	-485.403	-9.573	-1.171E-15	0.
44	0.4734	SLU 7-NL	NonStatic	Max	-485.405	8.841	1.015E-15	0.
44	0.94681	SLU 7-NL	NonStatic	Max	-471.799	37.6	4.537E-15	0.
44	0.94681	SLU 7-NL	NonStatic	Max	-471.801	56.366	6.616E-15	0.
44	1.42021	SLU 7-NL	NonStatic	Max	-457.011	83.153	9.897E-15	0.
44	1.42021	SLU 7-NL	NonStatic	Max	-457.013	102.274	1.195E-14	0.
44	1.89361	SLU 7-NL	NonStatic	Max	-441.04	127.088	1.499E-14	0.
44	1.89361	SLU 7-NL	NonStatic	Max	-441.042	146.563	1.706E-14	0.
44	2.36702	SLU 7-NL	NonStatic	Max	-423.887	169.404	1.985E-14	0.
44	2.36702	SLU 7-NL	NonStatic	Max	-423.888	189.225	2.195E-14	0.
44	2.84042	SLU 7-NL	NonStatic	Max	-405.549	210.094	2.450E-14	0.
44	0.	SLU 7-NL	NonStatic	Min	-497.827	-40.305	-4.934E-15	0.
44	0.4734	SLU 7-NL	NonStatic	Min	-485.403	-9.573	-1.171E-15	0.
44	0.4734	SLU 7-NL	NonStatic	Min	-485.405	8.841	1.015E-15	0.
44	0.94681	SLU 7-NL	NonStatic	Min	-471.799	37.6	4.537E-15	0.
44	0.94681	SLU 7-NL	NonStatic	Min	-471.801	56.366	6.616E-15	0.
44	1.42021	SLU 7-NL	NonStatic	Min	-457.011	83.153	9.897E-15	0.

Table: Element Forces - Frames, Part 1 of 2

Frame	Station	OutputCase	CaseType	StepType	P	V2	V3	T
	m				KN	KN	KN	KN-m
44	1.42021	SLU 7-NL	NonStatic	Min	-457.013	102.274	1.195E-14	0.
44	1.89361	SLU 7-NL	NonStatic	Min	-441.04	127.088	1.499E-14	0.
44	1.89361	SLU 7-NL	NonStatic	Min	-441.042	146.563	1.706E-14	0.
44	2.36702	SLU 7-NL	NonStatic	Min	-423.887	169.404	1.985E-14	0.
44	2.36702	SLU 7-NL	NonStatic	Min	-423.888	189.225	2.195E-14	0.
44	2.84042	SLU 7-NL	NonStatic	Min	-405.549	210.094	2.450E-14	0.
44	0.	SLE-C-NL	NonStatic	Max	-568.17	-38.43	-5.528E-15	0.
44	0.4734	SLE-C-NL	NonStatic	Max	-555.747	-3.664	-1.270E-15	0.
44	0.4734	SLE-C-NL	NonStatic	Max	-555.747	-2.209	-8.784E-16	0.
44	0.94681	SLE-C-NL	NonStatic	Max	-542.14	30.584	3.138E-15	0.
44	0.94681	SLE-C-NL	NonStatic	Max	-542.14	31.983	3.313E-15	0.
44	1.42021	SLE-C-NL	NonStatic	Max	-527.351	62.803	7.087E-15	0.
44	1.42021	SLE-C-NL	NonStatic	Max	-527.351	64.109	7.149E-15	0.
44	1.89361	SLE-C-NL	NonStatic	Max	-511.378	92.957	1.068E-14	0.
44	1.89361	SLE-C-NL	NonStatic	Max	-511.378	94.139	1.068E-14	0.
44	2.36702	SLE-C-NL	NonStatic	Max	-494.222	121.014	1.397E-14	0.
44	2.36702	SLE-C-NL	NonStatic	Max	-494.222	122.043	1.393E-14	0.
44	2.84042	SLE-C-NL	NonStatic	Max	-475.883	146.946	1.698E-14	0.
44	0.	SLE-C-NL	NonStatic	Min	-568.17	-38.43	-5.528E-15	0.
44	0.4734	SLE-C-NL	NonStatic	Min	-555.747	-3.664	-1.270E-15	0.
44	0.4734	SLE-C-NL	NonStatic	Min	-555.747	-2.209	-8.784E-16	0.
44	0.94681	SLE-C-NL	NonStatic	Min	-542.14	30.584	3.138E-15	0.
44	0.94681	SLE-C-NL	NonStatic	Min	-542.14	31.983	3.313E-15	0.
44	1.42021	SLE-C-NL	NonStatic	Min	-527.351	62.803	7.087E-15	0.
44	1.42021	SLE-C-NL	NonStatic	Min	-527.351	64.109	7.149E-15	0.
44	1.89361	SLE-C-NL	NonStatic	Min	-511.378	92.957	1.068E-14	0.
44	1.89361	SLE-C-NL	NonStatic	Min	-511.378	94.139	1.068E-14	0.
44	2.36702	SLE-C-NL	NonStatic	Min	-494.222	121.014	1.397E-14	0.
44	2.36702	SLE-C-NL	NonStatic	Min	-494.222	122.043	1.393E-14	0.
44	2.84042	SLE-C-NL	NonStatic	Min	-475.883	146.946	1.698E-14	0.
44	0.	SLE-F-1-NL	NonStatic	Max	-552.279	-34.474	-5.145E-15	0.
44	0.4734	SLE-F-1-NL	NonStatic	Max	-539.855	-3.742	-1.381E-15	0.
44	0.4734	SLE-F-1-NL	NonStatic	Max	-539.855	-2.143	-9.342E-16	0.
44	0.94681	SLE-F-1-NL	NonStatic	Max	-526.249	26.616	2.588E-15	0.
44	0.94681	SLE-F-1-NL	NonStatic	Max	-526.249	28.153	2.817E-15	0.
44	1.42021	SLE-F-1-NL	NonStatic	Max	-511.459	54.94	6.098E-15	0.
44	1.42021	SLE-F-1-NL	NonStatic	Max	-511.459	56.374	6.212E-15	0.
44	1.89361	SLE-F-1-NL	NonStatic	Max	-495.487	81.188	9.251E-15	0.
44	1.89361	SLE-F-1-NL	NonStatic	Max	-495.487	82.483	9.299E-15	0.
44	2.36702	SLE-F-1-NL	NonStatic	Max	-478.331	105.325	1.210E-14	0.
44	2.36702	SLE-F-1-NL	NonStatic	Max	-478.331	106.45	1.210E-14	0.
44	2.84042	SLE-F-1-NL	NonStatic	Max	-459.992	127.32	1.466E-14	0.
44	0.	SLE-F-1-NL	NonStatic	Min	-552.279	-34.474	-5.145E-15	0.
44	0.4734	SLE-F-1-NL	NonStatic	Min	-539.855	-3.742	-1.381E-15	0.
44	0.4734	SLE-F-1-NL	NonStatic	Min	-539.855	-2.143	-9.342E-16	0.
44	0.94681	SLE-F-1-NL	NonStatic	Min	-526.249	26.616	2.588E-15	0.
44	0.94681	SLE-F-1-NL	NonStatic	Min	-526.249	28.153	2.817E-15	0.
44	1.42021	SLE-F-1-NL	NonStatic	Min	-511.459	54.94	6.098E-15	0.
44	1.42021	SLE-F-1-NL	NonStatic	Min	-511.459	56.374	6.212E-15	0.
44	1.89361	SLE-F-1-NL	NonStatic	Min	-495.487	81.188	9.251E-15	0.
44	1.89361	SLE-F-1-NL	NonStatic	Min	-495.487	82.483	9.299E-15	0.
44	2.36702	SLE-F-1-NL	NonStatic	Min	-478.331	105.325	1.210E-14	0.
44	2.36702	SLE-F-1-NL	NonStatic	Min	-478.331	106.45	1.210E-14	0.
44	2.84042	SLE-F-1-NL	NonStatic	Min	-459.992	127.32	1.466E-14	0.

Table: Element Forces - Frames, Part 1 of 2

Frame	Station	OutputCase	CaseType	StepType	P	V2	V3	T
	m				KN	KN	KN	KN-m
44	0.	SLE-F-2-NL	NonStatic	Max	-485.7	-43.152	-5.844E-15	0.
44	0.4734	SLE-F-2-NL	NonStatic	Max	-473.277	-9.194	-1.685E-15	0.
44	0.4734	SLE-F-2-NL	NonStatic	Max	-473.277	-9.194	-1.531E-15	0.
44	0.94681	SLE-F-2-NL	NonStatic	Max	-459.671	22.792	2.386E-15	0.
44	0.94681	SLE-F-2-NL	NonStatic	Max	-459.671	22.792	2.361E-15	0.
44	1.42021	SLE-F-2-NL	NonStatic	Max	-444.881	52.806	6.037E-15	0.
44	1.42021	SLE-F-2-NL	NonStatic	Max	-444.881	52.806	5.927E-15	0.
44	1.89361	SLE-F-2-NL	NonStatic	Max	-428.908	80.846	9.361E-15	0.
44	1.89361	SLE-F-2-NL	NonStatic	Max	-428.908	80.846	9.211E-15	0.
44	2.36702	SLE-F-2-NL	NonStatic	Max	-411.753	106.915	1.240E-14	0.
44	2.36702	SLE-F-2-NL	NonStatic	Max	-411.753	106.915	1.224E-14	0.
44	2.84042	SLE-F-2-NL	NonStatic	Max	-393.414	131.011	1.519E-14	0.
44	0.	SLE-F-2-NL	NonStatic	Min	-485.7	-43.152	-5.844E-15	0.
44	0.4734	SLE-F-2-NL	NonStatic	Min	-473.277	-9.194	-1.685E-15	0.
44	0.4734	SLE-F-2-NL	NonStatic	Min	-473.277	-9.194	-1.531E-15	0.
44	0.94681	SLE-F-2-NL	NonStatic	Min	-459.671	22.792	2.386E-15	0.
44	0.94681	SLE-F-2-NL	NonStatic	Min	-459.671	22.792	2.361E-15	0.
44	1.42021	SLE-F-2-NL	NonStatic	Min	-444.881	52.806	6.037E-15	0.
44	1.42021	SLE-F-2-NL	NonStatic	Min	-444.881	52.806	5.927E-15	0.
44	1.89361	SLE-F-2-NL	NonStatic	Min	-428.908	80.846	9.361E-15	0.
44	1.89361	SLE-F-2-NL	NonStatic	Min	-428.908	80.846	9.211E-15	0.
44	2.36702	SLE-F-2-NL	NonStatic	Min	-411.753	106.915	1.240E-14	0.
44	2.36702	SLE-F-2-NL	NonStatic	Min	-411.753	106.915	1.224E-14	0.
44	2.84042	SLE-F-2-NL	NonStatic	Min	-393.414	131.011	1.519E-14	0.
44	0.	SLE-F-3-NL	NonStatic	Max	-491.725	-38.143	-5.216E-15	0.
44	0.4734	SLE-F-3-NL	NonStatic	Max	-479.302	-7.411	-1.453E-15	0.
44	0.4734	SLE-F-3-NL	NonStatic	Max	-479.302	-2.983	-7.748E-16	0.
44	0.94681	SLE-F-3-NL	NonStatic	Max	-465.696	25.776	2.747E-15	0.
44	0.94681	SLE-F-3-NL	NonStatic	Max	-465.696	30.358	3.268E-15	0.
44	1.42021	SLE-F-3-NL	NonStatic	Max	-450.906	57.145	6.548E-15	0.
44	1.42021	SLE-F-3-NL	NonStatic	Max	-450.907	61.858	7.001E-15	0.
44	1.89361	SLE-F-3-NL	NonStatic	Max	-434.934	86.672	1.004E-14	0.
44	1.89361	SLE-F-3-NL	NonStatic	Max	-434.934	91.495	1.046E-14	0.
44	2.36702	SLE-F-3-NL	NonStatic	Max	-417.778	114.336	1.326E-14	0.
44	2.36702	SLE-F-3-NL	NonStatic	Max	-417.778	119.249	1.368E-14	0.
44	2.84042	SLE-F-3-NL	NonStatic	Max	-399.439	140.118	1.624E-14	0.
44	0.	SLE-F-3-NL	NonStatic	Min	-491.725	-38.143	-5.216E-15	0.
44	0.4734	SLE-F-3-NL	NonStatic	Min	-479.302	-7.411	-1.453E-15	0.
44	0.4734	SLE-F-3-NL	NonStatic	Min	-479.302	-2.983	-7.748E-16	0.
44	0.94681	SLE-F-3-NL	NonStatic	Min	-465.696	25.776	2.747E-15	0.
44	0.94681	SLE-F-3-NL	NonStatic	Min	-465.696	30.358	3.268E-15	0.
44	1.42021	SLE-F-3-NL	NonStatic	Min	-450.906	57.145	6.548E-15	0.
44	1.42021	SLE-F-3-NL	NonStatic	Min	-450.907	61.858	7.001E-15	0.
44	1.89361	SLE-F-3-NL	NonStatic	Min	-434.934	86.672	1.004E-14	0.
44	1.89361	SLE-F-3-NL	NonStatic	Min	-434.934	91.495	1.046E-14	0.
44	2.36702	SLE-F-3-NL	NonStatic	Min	-417.778	114.336	1.326E-14	0.
44	2.36702	SLE-F-3-NL	NonStatic	Min	-417.778	119.249	1.368E-14	0.
44	2.84042	SLE-F-3-NL	NonStatic	Min	-399.439	140.118	1.624E-14	0.
44	0.	SLE-QP-NL	NonStatic	Max	-488.713	-37.502	-5.257E-15	0.
44	0.4734	SLE-QP-NL	NonStatic	Max	-476.29	-6.77	-1.494E-15	0.
44	0.4734	SLE-QP-NL	NonStatic	Max	-476.29	-5.579	-1.167E-15	0.
44	0.94681	SLE-QP-NL	NonStatic	Max	-462.684	23.18	2.355E-15	0.
44	0.94681	SLE-QP-NL	NonStatic	Max	-462.684	24.322	2.494E-15	0.
44	1.42021	SLE-QP-NL	NonStatic	Max	-447.894	51.109	5.775E-15	0.

Table: Element Forces - Frames, Part 1 of 2

Frame	Station	OutputCase	CaseType	StepType	P	V2	V3	T
	m				KN	KN	KN	KN-m
44	1.42021	SLE-QP-NL	NonStatic	Max	-447.894	52.173	5.819E-15	0.
44	1.89361	SLE-QP-NL	NonStatic	Max	-431.921	76.988	8.858E-15	0.
44	1.89361	SLE-QP-NL	NonStatic	Max	-431.921	77.95	8.848E-15	0.
44	2.36702	SLE-QP-NL	NonStatic	Max	-414.766	100.791	1.165E-14	0.
44	2.36702	SLE-QP-NL	NonStatic	Max	-414.766	101.627	1.160E-14	0.
44	2.84042	SLE-QP-NL	NonStatic	Max	-396.427	122.497	1.416E-14	0.
44	0.	SLE-QP-NL	NonStatic	Min	-488.713	-37.502	-5.257E-15	0.
44	0.4734	SLE-QP-NL	NonStatic	Min	-476.29	-6.77	-1.494E-15	0.
44	0.4734	SLE-QP-NL	NonStatic	Min	-476.29	-5.579	-1.167E-15	0.
44	0.94681	SLE-QP-NL	NonStatic	Min	-462.684	23.18	2.355E-15	0.
44	0.94681	SLE-QP-NL	NonStatic	Min	-462.684	24.322	2.494E-15	0.
44	1.42021	SLE-QP-NL	NonStatic	Min	-447.894	51.109	5.775E-15	0.
44	1.42021	SLE-QP-NL	NonStatic	Min	-447.894	52.173	5.819E-15	0.
44	1.89361	SLE-QP-NL	NonStatic	Min	-431.921	76.988	8.858E-15	0.
44	1.89361	SLE-QP-NL	NonStatic	Min	-431.921	77.95	8.848E-15	0.
44	2.36702	SLE-QP-NL	NonStatic	Min	-414.766	100.791	1.165E-14	0.
44	2.36702	SLE-QP-NL	NonStatic	Min	-414.766	101.627	1.160E-14	0.
44	2.84042	SLE-QP-NL	NonStatic	Min	-396.427	122.497	1.416E-14	0.
44	0.	SLV1-NL	NonStatic	Max	-491.228	-57.784	-7.306E-15	0.
44	0.4734	SLV1-NL	NonStatic	Max	-478.63	-16.112	-2.203E-15	0.
44	0.4734	SLV1-NL	NonStatic	Max	-478.63	-16.112	-2.143E-15	0.
44	0.94681	SLV1-NL	NonStatic	Max	-464.833	23.699	2.732E-15	0.
44	0.94681	SLV1-NL	NonStatic	Max	-464.833	23.699	2.621E-15	0.
44	1.42021	SLV1-NL	NonStatic	Max	-449.835	61.647	7.268E-15	0.
44	1.42021	SLV1-NL	NonStatic	Max	-449.835	61.647	7.076E-15	0.
44	1.89361	SLV1-NL	NonStatic	Max	-433.639	97.734	1.149E-14	0.
44	1.89361	SLV1-NL	NonStatic	Max	-433.639	97.734	1.126E-14	0.
44	2.36702	SLV1-NL	NonStatic	Max	-416.242	131.959	1.546E-14	0.
44	2.36702	SLV1-NL	NonStatic	Max	-416.242	131.959	1.521E-14	0.
44	2.84042	SLV1-NL	NonStatic	Max	-397.645	164.323	1.917E-14	0.
44	0.	SLV1-NL	NonStatic	Min	-491.228	-57.784	-7.306E-15	0.
44	0.4734	SLV1-NL	NonStatic	Min	-478.63	-16.112	-2.203E-15	0.
44	0.4734	SLV1-NL	NonStatic	Min	-478.63	-16.112	-2.143E-15	0.
44	0.94681	SLV1-NL	NonStatic	Min	-464.833	23.699	2.732E-15	0.
44	0.94681	SLV1-NL	NonStatic	Min	-464.833	23.699	2.621E-15	0.
44	1.42021	SLV1-NL	NonStatic	Min	-449.835	61.647	7.268E-15	0.
44	1.42021	SLV1-NL	NonStatic	Min	-449.835	61.647	7.076E-15	0.
44	1.89361	SLV1-NL	NonStatic	Min	-433.639	97.734	1.149E-14	0.
44	1.89361	SLV1-NL	NonStatic	Min	-433.639	97.734	1.126E-14	0.
44	2.36702	SLV1-NL	NonStatic	Min	-416.242	131.959	1.546E-14	0.
44	2.36702	SLV1-NL	NonStatic	Min	-416.242	131.959	1.521E-14	0.
44	2.84042	SLV1-NL	NonStatic	Min	-397.645	164.323	1.917E-14	0.
44	0.	SLV2-NL	NonStatic	Max	-515.998	-28.432	-3.997E-15	0.
44	0.4734	SLV2-NL	NonStatic	Max	-503.4	-7.027	-1.376E-15	0.
44	0.4734	SLV2-NL	NonStatic	Max	-503.402	11.273	9.637E-16	0.
44	0.94681	SLV2-NL	NonStatic	Max	-489.605	30.594	3.330E-15	0.
44	0.94681	SLV2-NL	NonStatic	Max	-489.607	49.27	5.537E-15	0.
44	1.42021	SLV2-NL	NonStatic	Max	-474.61	66.508	7.648E-15	0.
44	1.42021	SLV2-NL	NonStatic	Max	-474.611	85.537	9.812E-15	0.
44	1.89361	SLV2-NL	NonStatic	Max	-458.415	100.692	1.167E-14	0.
44	1.89361	SLV2-NL	NonStatic	Max	-458.416	120.054	1.383E-14	0.
44	2.36702	SLV2-NL	NonStatic	Max	-441.02	133.125	1.543E-14	0.
44	2.36702	SLV2-NL	NonStatic	Max	-441.021	152.799	1.762E-14	0.
44	2.84042	SLV2-NL	NonStatic	Max	-422.425	163.787	1.896E-14	0.

Table: Element Forces - Frames, Part 1 of 2

Frame	Station	OutputCase	CaseType	StepType	P	V2	V3	T
	m				KN	KN	KN	KN-m
44	0.	SLV2-NL	NonStatic	Min	-515.998	-28.432	-3.997E-15	0.
44	0.4734	SLV2-NL	NonStatic	Min	-503.4	-7.027	-1.376E-15	0.
44	0.4734	SLV2-NL	NonStatic	Min	-503.402	11.273	9.637E-16	0.
44	0.94681	SLV2-NL	NonStatic	Min	-489.605	30.594	3.330E-15	0.
44	0.94681	SLV2-NL	NonStatic	Min	-489.607	49.27	5.537E-15	0.
44	1.42021	SLV2-NL	NonStatic	Min	-474.61	66.508	7.648E-15	0.
44	1.42021	SLV2-NL	NonStatic	Min	-474.611	85.537	9.812E-15	0.
44	1.89361	SLV2-NL	NonStatic	Min	-458.415	100.692	1.167E-14	0.
44	1.89361	SLV2-NL	NonStatic	Min	-458.416	120.054	1.383E-14	0.
44	2.36702	SLV2-NL	NonStatic	Min	-441.02	133.125	1.543E-14	0.
44	2.36702	SLV2-NL	NonStatic	Min	-441.021	152.799	1.762E-14	0.
44	2.84042	SLV2-NL	NonStatic	Min	-422.425	163.787	1.896E-14	0.
44	0.	SLV3-NL	NonStatic	Max	-493.115	-56.538	-7.164E-15	0.
44	0.4734	SLV3-NL	NonStatic	Max	-480.866	-14.866	-2.060E-15	0.
44	0.4734	SLV3-NL	NonStatic	Max	-480.866	-14.866	-2.001E-15	0.
44	0.94681	SLV3-NL	NonStatic	Max	-467.451	24.945	2.874E-15	0.
44	0.94681	SLV3-NL	NonStatic	Max	-467.451	24.944	2.762E-15	0.
44	1.42021	SLV3-NL	NonStatic	Max	-452.869	62.893	7.410E-15	0.
44	1.42021	SLV3-NL	NonStatic	Max	-452.869	62.893	7.217E-15	0.
44	1.89361	SLV3-NL	NonStatic	Max	-437.121	98.98	1.164E-14	0.
44	1.89361	SLV3-NL	NonStatic	Max	-437.121	98.98	1.141E-14	0.
44	2.36702	SLV3-NL	NonStatic	Max	-420.206	133.205	1.560E-14	0.
44	2.36702	SLV3-NL	NonStatic	Max	-420.206	133.205	1.535E-14	0.
44	2.84042	SLV3-NL	NonStatic	Max	-402.124	165.569	1.931E-14	0.
44	0.	SLV3-NL	NonStatic	Min	-493.115	-56.538	-7.164E-15	0.
44	0.4734	SLV3-NL	NonStatic	Min	-480.866	-14.866	-2.060E-15	0.
44	0.4734	SLV3-NL	NonStatic	Min	-480.866	-14.866	-2.001E-15	0.
44	0.94681	SLV3-NL	NonStatic	Min	-467.451	24.945	2.874E-15	0.
44	0.94681	SLV3-NL	NonStatic	Min	-467.451	24.944	2.762E-15	0.
44	1.42021	SLV3-NL	NonStatic	Min	-452.869	62.893	7.410E-15	0.
44	1.42021	SLV3-NL	NonStatic	Min	-452.869	62.893	7.217E-15	0.
44	1.89361	SLV3-NL	NonStatic	Min	-437.121	98.98	1.164E-14	0.
44	1.89361	SLV3-NL	NonStatic	Min	-437.121	98.98	1.141E-14	0.
44	2.36702	SLV3-NL	NonStatic	Min	-420.206	133.205	1.560E-14	0.
44	2.36702	SLV3-NL	NonStatic	Min	-420.206	133.205	1.535E-14	0.
44	2.84042	SLV3-NL	NonStatic	Min	-402.124	165.569	1.931E-14	0.
44	0.	SLV4-NL	NonStatic	Max	-517.882	-27.201	-3.856E-15	0.
44	0.4734	SLV4-NL	NonStatic	Max	-505.633	-5.796	-1.235E-15	0.
44	0.4734	SLV4-NL	NonStatic	Max	-505.635	12.508	1.105E-15	0.
44	0.94681	SLV4-NL	NonStatic	Max	-492.22	31.829	3.471E-15	0.
44	0.94681	SLV4-NL	NonStatic	Max	-492.222	50.509	5.678E-15	0.
44	1.42021	SLV4-NL	NonStatic	Max	-477.64	67.747	7.789E-15	0.
44	1.42021	SLV4-NL	NonStatic	Max	-477.642	86.779	9.954E-15	0.
44	1.89361	SLV4-NL	NonStatic	Max	-461.893	101.934	1.181E-14	0.
44	1.89361	SLV4-NL	NonStatic	Max	-461.895	121.299	1.397E-14	0.
44	2.36702	SLV4-NL	NonStatic	Max	-444.98	134.37	1.557E-14	0.
44	2.36702	SLV4-NL	NonStatic	Max	-444.982	154.045	1.776E-14	0.
44	2.84042	SLV4-NL	NonStatic	Max	-426.9	165.033	1.910E-14	0.
44	0.	SLV4-NL	NonStatic	Min	-517.882	-27.201	-3.856E-15	0.
44	0.4734	SLV4-NL	NonStatic	Min	-505.633	-5.796	-1.235E-15	0.
44	0.4734	SLV4-NL	NonStatic	Min	-505.635	12.508	1.105E-15	0.
44	0.94681	SLV4-NL	NonStatic	Min	-492.22	31.829	3.471E-15	0.
44	0.94681	SLV4-NL	NonStatic	Min	-492.222	50.509	5.678E-15	0.
44	1.42021	SLV4-NL	NonStatic	Min	-477.64	67.747	7.789E-15	0.

Table: Element Forces - Frames, Part 1 of 2

Frame	Station	OutputCase	CaseType	StepType	P	V2	V3	T
	m				KN	KN	KN	KN-m
44	1.42021	SLV4-NL	NonStatic	Min	-477.642	86.779	9.954E-15	0.
44	1.89361	SLV4-NL	NonStatic	Min	-461.893	101.934	1.181E-14	0.
44	1.89361	SLV4-NL	NonStatic	Min	-461.895	121.299	1.397E-14	0.
44	2.36702	SLV4-NL	NonStatic	Min	-444.98	134.37	1.557E-14	0.
44	2.36702	SLV4-NL	NonStatic	Min	-444.982	154.045	1.776E-14	0.
44	2.84042	SLV4-NL	NonStatic	Min	-426.9	165.033	1.910E-14	0.
44	0.	SLV5-NL	NonStatic	Max	-497.838	-45.112	-6.096E-15	0.
44	0.4734	SLV5-NL	NonStatic	Max	-484.834	-10.533	-1.861E-15	0.
44	0.4734	SLV5-NL	NonStatic	Max	-484.834	-10.533	-1.701E-15	0.
44	0.94681	SLV5-NL	NonStatic	Max	-470.591	22.106	2.296E-15	0.
44	0.94681	SLV5-NL	NonStatic	Max	-470.591	22.106	2.273E-15	0.
44	1.42021	SLV5-NL	NonStatic	Max	-455.109	52.806	6.033E-15	0.
44	1.42021	SLV5-NL	NonStatic	Max	-455.109	52.806	5.922E-15	0.
44	1.89361	SLV5-NL	NonStatic	Max	-438.389	81.567	9.444E-15	0.
44	1.89361	SLV5-NL	NonStatic	Max	-438.389	81.567	9.291E-15	0.
44	2.36702	SLV5-NL	NonStatic	Max	-420.43	108.388	1.258E-14	0.
44	2.36702	SLV5-NL	NonStatic	Max	-420.43	108.388	1.240E-14	0.
44	2.84042	SLV5-NL	NonStatic	Max	-401.233	133.27	1.545E-14	0.
44	0.	SLV5-NL	NonStatic	Min	-497.838	-45.112	-6.096E-15	0.
44	0.4734	SLV5-NL	NonStatic	Min	-484.834	-10.533	-1.861E-15	0.
44	0.4734	SLV5-NL	NonStatic	Min	-484.834	-10.533	-1.701E-15	0.
44	0.94681	SLV5-NL	NonStatic	Min	-470.591	22.106	2.296E-15	0.
44	0.94681	SLV5-NL	NonStatic	Min	-470.591	22.106	2.273E-15	0.
44	1.42021	SLV5-NL	NonStatic	Min	-455.109	52.806	6.033E-15	0.
44	1.42021	SLV5-NL	NonStatic	Min	-455.109	52.806	5.922E-15	0.
44	1.89361	SLV5-NL	NonStatic	Min	-438.389	81.567	9.444E-15	0.
44	1.89361	SLV5-NL	NonStatic	Min	-438.389	81.567	9.291E-15	0.
44	2.36702	SLV5-NL	NonStatic	Min	-420.43	108.388	1.258E-14	0.
44	2.36702	SLV5-NL	NonStatic	Min	-420.43	108.388	1.240E-14	0.
44	2.84042	SLV5-NL	NonStatic	Min	-401.233	133.27	1.545E-14	0.
44	0.	SLV6-NL	NonStatic	Max	-505.06	-36.676	-5.145E-15	0.
44	0.4734	SLV6-NL	NonStatic	Max	-492.056	-8.177	-1.655E-15	0.
44	0.4734	SLV6-NL	NonStatic	Max	-492.056	-2.475	-7.855E-16	0.
44	0.94681	SLV6-NL	NonStatic	Max	-477.813	24.018	2.459E-15	0.
44	0.94681	SLV6-NL	NonStatic	Max	-477.813	29.793	3.152E-15	0.
44	1.42021	SLV6-NL	NonStatic	Max	-462.331	54.279	6.150E-15	0.
44	1.42021	SLV6-NL	NonStatic	Max	-462.331	60.099	6.759E-15	0.
44	1.89361	SLV6-NL	NonStatic	Max	-445.611	82.58	9.512E-15	0.
44	1.89361	SLV6-NL	NonStatic	Max	-445.611	88.42	1.008E-14	0.
44	2.36702	SLV6-NL	NonStatic	Max	-427.653	108.895	1.259E-14	0.
44	2.36702	SLV6-NL	NonStatic	Max	-427.652	114.731	1.314E-14	0.
44	2.84042	SLV6-NL	NonStatic	Max	-408.455	133.201	1.540E-14	0.
44	0.	SLV6-NL	NonStatic	Min	-505.06	-36.676	-5.145E-15	0.
44	0.4734	SLV6-NL	NonStatic	Min	-492.056	-8.177	-1.655E-15	0.
44	0.4734	SLV6-NL	NonStatic	Min	-492.056	-2.475	-7.855E-16	0.
44	0.94681	SLV6-NL	NonStatic	Min	-477.813	24.018	2.459E-15	0.
44	0.94681	SLV6-NL	NonStatic	Min	-477.813	29.793	3.152E-15	0.
44	1.42021	SLV6-NL	NonStatic	Min	-462.331	54.279	6.150E-15	0.
44	1.42021	SLV6-NL	NonStatic	Min	-462.331	60.099	6.759E-15	0.
44	1.89361	SLV6-NL	NonStatic	Min	-445.611	82.58	9.512E-15	0.
44	1.89361	SLV6-NL	NonStatic	Min	-445.611	88.42	1.008E-14	0.
44	2.36702	SLV6-NL	NonStatic	Min	-427.653	108.895	1.259E-14	0.
44	2.36702	SLV6-NL	NonStatic	Min	-427.652	114.731	1.314E-14	0.
44	2.84042	SLV6-NL	NonStatic	Min	-408.455	133.201	1.540E-14	0.

Table: Element Forces - Frames, Part 1 of 2

Frame	Station	OutputCase	CaseType	StepType	P	V2	V3	T
	m				KN	KN	KN	KN-m
44	0.	SLV7-NL	NonStatic	Max	-504.134	-40.957	-5.620E-15	0.
44	0.4734	SLV7-NL	NonStatic	Max	-492.292	-6.378	-1.386E-15	0.
44	0.4734	SLV7-NL	NonStatic	Max	-492.292	-6.378	-1.227E-15	0.
44	0.94681	SLV7-NL	NonStatic	Max	-479.322	26.261	2.770E-15	0.
44	0.94681	SLV7-NL	NonStatic	Max	-479.322	26.261	2.746E-15	0.
44	1.42021	SLV7-NL	NonStatic	Max	-465.225	56.961	6.506E-15	0.
44	1.42021	SLV7-NL	NonStatic	Max	-465.225	56.961	6.394E-15	0.
44	1.89361	SLV7-NL	NonStatic	Max	-450.	85.722	9.916E-15	0.
44	1.89361	SLV7-NL	NonStatic	Max	-450.	85.722	9.763E-15	0.
44	2.36702	SLV7-NL	NonStatic	Max	-433.647	112.543	1.305E-14	0.
44	2.36702	SLV7-NL	NonStatic	Max	-433.647	112.543	1.288E-14	0.
44	2.84042	SLV7-NL	NonStatic	Max	-416.166	137.425	1.592E-14	0.
44	0.	SLV7-NL	NonStatic	Min	-504.134	-40.957	-5.620E-15	0.
44	0.4734	SLV7-NL	NonStatic	Min	-492.292	-6.378	-1.386E-15	0.
44	0.4734	SLV7-NL	NonStatic	Min	-492.292	-6.378	-1.227E-15	0.
44	0.94681	SLV7-NL	NonStatic	Min	-479.322	26.261	2.770E-15	0.
44	0.94681	SLV7-NL	NonStatic	Min	-479.322	26.261	2.746E-15	0.
44	1.42021	SLV7-NL	NonStatic	Min	-465.225	56.961	6.506E-15	0.
44	1.42021	SLV7-NL	NonStatic	Min	-465.225	56.961	6.394E-15	0.
44	1.89361	SLV7-NL	NonStatic	Min	-450.	85.722	9.916E-15	0.
44	1.89361	SLV7-NL	NonStatic	Min	-450.	85.722	9.763E-15	0.
44	2.36702	SLV7-NL	NonStatic	Min	-433.647	112.543	1.305E-14	0.
44	2.36702	SLV7-NL	NonStatic	Min	-433.647	112.543	1.288E-14	0.
44	2.84042	SLV7-NL	NonStatic	Min	-416.166	137.425	1.592E-14	0.
44	0.	SLV8-NL	NonStatic	Max	-511.337	-32.569	-4.675E-15	0.
44	0.4734	SLV8-NL	NonStatic	Max	-499.495	-4.07	-1.185E-15	0.
44	0.4734	SLV8-NL	NonStatic	Max	-499.495	1.645	-3.155E-16	0.
44	0.94681	SLV8-NL	NonStatic	Max	-486.525	28.138	2.929E-15	0.
44	0.94681	SLV8-NL	NonStatic	Max	-486.525	33.926	3.622E-15	0.
44	1.42021	SLV8-NL	NonStatic	Max	-472.428	58.413	6.621E-15	0.
44	1.42021	SLV8-NL	NonStatic	Max	-472.428	64.244	7.231E-15	0.
44	1.89361	SLV8-NL	NonStatic	Max	-457.203	86.726	9.984E-15	0.
44	1.89361	SLV8-NL	NonStatic	Max	-457.203	92.573	1.055E-14	0.
44	2.36702	SLV8-NL	NonStatic	Max	-440.85	113.049	1.306E-14	0.
44	2.36702	SLV8-NL	NonStatic	Max	-440.85	118.888	1.361E-14	0.
44	2.84042	SLV8-NL	NonStatic	Max	-423.369	137.358	1.587E-14	0.
44	0.	SLV8-NL	NonStatic	Min	-511.337	-32.569	-4.675E-15	0.
44	0.4734	SLV8-NL	NonStatic	Min	-499.495	-4.07	-1.185E-15	0.
44	0.4734	SLV8-NL	NonStatic	Min	-499.495	1.645	-3.155E-16	0.
44	0.94681	SLV8-NL	NonStatic	Min	-486.525	28.138	2.929E-15	0.
44	0.94681	SLV8-NL	NonStatic	Min	-486.525	33.926	3.622E-15	0.
44	1.42021	SLV8-NL	NonStatic	Min	-472.428	58.413	6.621E-15	0.
44	1.42021	SLV8-NL	NonStatic	Min	-472.428	64.244	7.231E-15	0.
44	1.89361	SLV8-NL	NonStatic	Min	-457.203	86.726	9.984E-15	0.
44	1.89361	SLV8-NL	NonStatic	Min	-457.203	92.573	1.055E-14	0.
44	2.36702	SLV8-NL	NonStatic	Min	-440.85	113.049	1.306E-14	0.
44	2.36702	SLV8-NL	NonStatic	Min	-440.85	118.888	1.361E-14	0.
44	2.84042	SLV8-NL	NonStatic	Min	-423.369	137.358	1.587E-14	0.
44	0.	SLV9-NL	NonStatic	Max	-494.451	-49.004	-6.385E-15	0.
44	0.4734	SLV9-NL	NonStatic	Max	-482.202	-9.658	-1.567E-15	0.
44	0.4734	SLV9-NL	NonStatic	Max	-482.202	-9.658	-1.474E-15	0.
44	0.94681	SLV9-NL	NonStatic	Max	-468.787	27.606	3.089E-15	0.
44	0.94681	SLV9-NL	NonStatic	Max	-468.787	27.606	3.008E-15	0.
44	1.42021	SLV9-NL	NonStatic	Max	-454.205	62.786	7.316E-15	0.

Table: Element Forces - Frames, Part 1 of 2

Frame	Station	OutputCase	CaseType	StepType	P	V2	V3	T
	m				KN	KN	KN	KN-m
44	1.42021	SLV9-NL	NonStatic	Max	-454.205	62.786	7.153E-15	0.
44	1.89361	SLV9-NL	NonStatic	Max	-438.457	95.882	1.121E-14	0.
44	1.89361	SLV9-NL	NonStatic	Max	-438.457	95.882	1.101E-14	0.
44	2.36702	SLV9-NL	NonStatic	Max	-421.542	126.896	1.480E-14	0.
44	2.36702	SLV9-NL	NonStatic	Max	-421.542	126.896	1.459E-14	0.
44	2.84042	SLV9-NL	NonStatic	Max	-403.46	155.826	1.813E-14	0.
44	0.	SLV9-NL	NonStatic	Min	-494.451	-49.004	-6.385E-15	0.
44	0.4734	SLV9-NL	NonStatic	Min	-482.202	-9.658	-1.567E-15	0.
44	0.4734	SLV9-NL	NonStatic	Min	-482.202	-9.658	-1.474E-15	0.
44	0.94681	SLV9-NL	NonStatic	Min	-468.787	27.606	3.089E-15	0.
44	0.94681	SLV9-NL	NonStatic	Min	-468.787	27.606	3.008E-15	0.
44	1.42021	SLV9-NL	NonStatic	Min	-454.205	62.786	7.316E-15	0.
44	1.42021	SLV9-NL	NonStatic	Min	-454.205	62.786	7.153E-15	0.
44	1.89361	SLV9-NL	NonStatic	Min	-438.457	95.882	1.121E-14	0.
44	1.89361	SLV9-NL	NonStatic	Min	-438.457	95.882	1.101E-14	0.
44	2.36702	SLV9-NL	NonStatic	Min	-421.542	126.896	1.480E-14	0.
44	2.36702	SLV9-NL	NonStatic	Min	-421.542	126.896	1.459E-14	0.
44	2.84042	SLV9-NL	NonStatic	Min	-403.46	155.826	1.813E-14	0.
44	0.	SLV10-NL	NonStatic	Max	-501.492	-30.101	-4.463E-15	0.
44	0.4734	SLV10-NL	NonStatic	Max	-489.243	-6.371	-1.557E-15	0.
44	0.4734	SLV10-NL	NonStatic	Max	-489.244	0.494	-5.085E-16	0.
44	0.94681	SLV10-NL	NonStatic	Max	-475.829	22.363	2.170E-15	0.
44	0.94681	SLV10-NL	NonStatic	Max	-475.829	29.46	3.059E-15	0.
44	1.42021	SLV10-NL	NonStatic	Max	-461.247	49.466	5.509E-15	0.
44	1.42021	SLV10-NL	NonStatic	Max	-461.248	56.761	6.330E-15	0.
44	1.89361	SLV10-NL	NonStatic	Max	-445.499	74.906	8.552E-15	0.
44	1.89361	SLV10-NL	NonStatic	Max	-445.5	82.368	9.348E-15	0.
44	2.36702	SLV10-NL	NonStatic	Max	-428.585	98.652	1.134E-14	0.
44	2.36702	SLV10-NL	NonStatic	Max	-428.585	106.255	1.213E-14	0.
44	2.84042	SLV10-NL	NonStatic	Max	-410.503	120.677	1.390E-14	0.
44	0.	SLV10-NL	NonStatic	Min	-501.492	-30.101	-4.463E-15	0.
44	0.4734	SLV10-NL	NonStatic	Min	-489.243	-6.371	-1.557E-15	0.
44	0.4734	SLV10-NL	NonStatic	Min	-489.244	0.494	-5.085E-16	0.
44	0.94681	SLV10-NL	NonStatic	Min	-475.829	22.363	2.170E-15	0.
44	0.94681	SLV10-NL	NonStatic	Min	-475.829	29.46	3.059E-15	0.
44	1.42021	SLV10-NL	NonStatic	Min	-461.247	49.466	5.509E-15	0.
44	1.42021	SLV10-NL	NonStatic	Min	-461.248	56.761	6.330E-15	0.
44	1.89361	SLV10-NL	NonStatic	Min	-445.499	74.906	8.552E-15	0.
44	1.89361	SLV10-NL	NonStatic	Min	-445.5	82.368	9.348E-15	0.
44	2.36702	SLV10-NL	NonStatic	Min	-428.585	98.652	1.134E-14	0.
44	2.36702	SLV10-NL	NonStatic	Min	-428.585	106.255	1.213E-14	0.
44	2.84042	SLV10-NL	NonStatic	Min	-410.503	120.677	1.390E-14	0.
44	0.	SLV11-NL	NonStatic	Max	-507.641	-49.467	-6.496E-15	0.
44	0.4734	SLV11-NL	NonStatic	Max	-495.044	-10.12	-1.678E-15	0.
44	0.4734	SLV11-NL	NonStatic	Max	-495.044	-10.12	-1.567E-15	0.
44	0.94681	SLV11-NL	NonStatic	Max	-481.246	27.143	2.996E-15	0.
44	0.94681	SLV11-NL	NonStatic	Max	-481.246	27.143	2.926E-15	0.
44	1.42021	SLV11-NL	NonStatic	Max	-466.249	62.323	7.235E-15	0.
44	1.42021	SLV11-NL	NonStatic	Max	-466.249	62.323	7.079E-15	0.
44	1.89361	SLV11-NL	NonStatic	Max	-450.052	95.42	1.113E-14	0.
44	1.89361	SLV11-NL	NonStatic	Max	-450.052	95.42	1.094E-14	0.
44	2.36702	SLV11-NL	NonStatic	Max	-432.656	126.434	1.473E-14	0.
44	2.36702	SLV11-NL	NonStatic	Max	-432.656	126.434	1.452E-14	0.
44	2.84042	SLV11-NL	NonStatic	Max	-414.059	155.364	1.806E-14	0.

Table: Element Forces - Frames, Part 1 of 2

Frame	Station	OutputCase	CaseType	StepType	P	V2	V3	T
	m				KN	KN	KN	KN-m
44	0.	SLV11-NL	NonStatic	Min	-507.641	-49.467	-6.496E-15	0.
44	0.4734	SLV11-NL	NonStatic	Min	-495.044	-10.12	-1.678E-15	0.
44	0.4734	SLV11-NL	NonStatic	Min	-495.044	-10.12	-1.567E-15	0.
44	0.94681	SLV11-NL	NonStatic	Min	-481.246	27.143	2.996E-15	0.
44	0.94681	SLV11-NL	NonStatic	Min	-481.246	27.143	2.926E-15	0.
44	1.42021	SLV11-NL	NonStatic	Min	-466.249	62.323	7.235E-15	0.
44	1.42021	SLV11-NL	NonStatic	Min	-466.249	62.323	7.079E-15	0.
44	1.89361	SLV11-NL	NonStatic	Min	-450.052	95.42	1.113E-14	0.
44	1.89361	SLV11-NL	NonStatic	Min	-450.052	95.42	1.094E-14	0.
44	2.36702	SLV11-NL	NonStatic	Min	-432.656	126.434	1.473E-14	0.
44	2.36702	SLV11-NL	NonStatic	Min	-432.656	126.434	1.452E-14	0.
44	2.84042	SLV11-NL	NonStatic	Min	-414.059	155.364	1.806E-14	0.
44	0.	SLV12-NL	NonStatic	Max	-514.661	-30.605	-4.579E-15	0.
44	0.4734	SLV12-NL	NonStatic	Max	-502.063	-6.874	-1.673E-15	0.
44	0.4734	SLV12-NL	NonStatic	Max	-502.063	0.013	-6.033E-16	0.
44	0.94681	SLV12-NL	NonStatic	Max	-488.266	21.882	2.075E-15	0.
44	0.94681	SLV12-NL	NonStatic	Max	-488.266	28.997	2.977E-15	0.
44	1.42021	SLV12-NL	NonStatic	Max	-473.269	49.004	5.427E-15	0.
44	1.42021	SLV12-NL	NonStatic	Max	-473.27	56.31	6.257E-15	0.
44	1.89361	SLV12-NL	NonStatic	Max	-457.073	74.455	8.479E-15	0.
44	1.89361	SLV12-NL	NonStatic	Max	-457.073	81.921	9.280E-15	0.
44	2.36702	SLV12-NL	NonStatic	Max	-439.676	98.205	1.127E-14	0.
44	2.36702	SLV12-NL	NonStatic	Max	-439.677	105.802	1.207E-14	0.
44	2.84042	SLV12-NL	NonStatic	Max	-421.08	120.223	1.383E-14	0.
44	0.	SLV12-NL	NonStatic	Min	-514.661	-30.605	-4.579E-15	0.
44	0.4734	SLV12-NL	NonStatic	Min	-502.063	-6.874	-1.673E-15	0.
44	0.4734	SLV12-NL	NonStatic	Min	-502.063	0.013	-6.033E-16	0.
44	0.94681	SLV12-NL	NonStatic	Min	-488.266	21.882	2.075E-15	0.
44	0.94681	SLV12-NL	NonStatic	Min	-488.266	28.997	2.977E-15	0.
44	1.42021	SLV12-NL	NonStatic	Min	-473.269	49.004	5.427E-15	0.
44	1.42021	SLV12-NL	NonStatic	Min	-473.27	56.31	6.257E-15	0.
44	1.89361	SLV12-NL	NonStatic	Min	-457.073	74.455	8.479E-15	0.
44	1.89361	SLV12-NL	NonStatic	Min	-457.073	81.921	9.280E-15	0.
44	2.36702	SLV12-NL	NonStatic	Min	-439.676	98.205	1.127E-14	0.
44	2.36702	SLV12-NL	NonStatic	Min	-439.677	105.802	1.207E-14	0.
44	2.84042	SLV12-NL	NonStatic	Min	-421.08	120.223	1.383E-14	0.
44	0.	SLV13-NL	NonStatic	Max	-481.664	-39.882	-5.434E-15	0.
44	0.4734	SLV13-NL	NonStatic	Max	-469.822	-6.001	-1.285E-15	0.
44	0.4734	SLV13-NL	NonStatic	Max	-469.822	-6.001	-1.143E-15	0.
44	0.94681	SLV13-NL	NonStatic	Max	-456.853	25.874	2.760E-15	0.
44	0.94681	SLV13-NL	NonStatic	Max	-456.853	25.874	2.729E-15	0.
44	1.42021	SLV13-NL	NonStatic	Max	-442.756	55.744	6.387E-15	0.
44	1.42021	SLV13-NL	NonStatic	Max	-442.756	55.744	6.274E-15	0.
44	1.89361	SLV13-NL	NonStatic	Max	-427.53	83.607	9.686E-15	0.
44	1.89361	SLV13-NL	NonStatic	Max	-427.53	83.607	9.534E-15	0.
44	2.36702	SLV13-NL	NonStatic	Max	-411.177	109.465	1.270E-14	0.
44	2.36702	SLV13-NL	NonStatic	Max	-411.177	109.465	1.253E-14	0.
44	2.84042	SLV13-NL	NonStatic	Max	-393.697	133.318	1.545E-14	0.
44	0.	SLV13-NL	NonStatic	Min	-481.664	-39.882	-5.434E-15	0.
44	0.4734	SLV13-NL	NonStatic	Min	-469.822	-6.001	-1.285E-15	0.
44	0.4734	SLV13-NL	NonStatic	Min	-469.822	-6.001	-1.143E-15	0.
44	0.94681	SLV13-NL	NonStatic	Min	-456.853	25.874	2.760E-15	0.
44	0.94681	SLV13-NL	NonStatic	Min	-456.853	25.874	2.729E-15	0.
44	1.42021	SLV13-NL	NonStatic	Min	-442.756	55.744	6.387E-15	0.

Table: Element Forces - Frames, Part 1 of 2

Frame	Station	OutputCase	CaseType	StepType	P	V2	V3	T
	m				KN	KN	KN	KN-m
44	1.42021	SLV13-NL	NonStatic	Min	-442.756	55.744	6.274E-15	0.
44	1.89361	SLV13-NL	NonStatic	Min	-427.53	83.607	9.686E-15	0.
44	1.89361	SLV13-NL	NonStatic	Min	-427.53	83.607	9.534E-15	0.
44	2.36702	SLV13-NL	NonStatic	Min	-411.177	109.465	1.270E-14	0.
44	2.36702	SLV13-NL	NonStatic	Min	-411.177	109.465	1.253E-14	0.
44	2.84042	SLV13-NL	NonStatic	Min	-393.697	133.318	1.545E-14	0.
44	0.	SLV14-NL	NonStatic	Max	-483.565	-34.552	-4.894E-15	0.
44	0.4734	SLV14-NL	NonStatic	Max	-471.723	-5.356	-1.318E-15	0.
44	0.4734	SLV14-NL	NonStatic	Max	-471.723	-3.052	-8.614E-16	0.
44	0.94681	SLV14-NL	NonStatic	Max	-458.754	24.205	2.477E-15	0.
44	0.94681	SLV14-NL	NonStatic	Max	-458.754	26.542	2.760E-15	0.
44	1.42021	SLV14-NL	NonStatic	Max	-444.657	51.859	5.861E-15	0.
44	1.42021	SLV14-NL	NonStatic	Max	-444.657	54.2	6.060E-15	0.
44	1.89361	SLV14-NL	NonStatic	Max	-429.431	77.578	8.923E-15	0.
44	1.89361	SLV14-NL	NonStatic	Max	-429.431	79.897	9.079E-15	0.
44	2.36702	SLV14-NL	NonStatic	Max	-413.078	101.336	1.170E-14	0.
44	2.36702	SLV14-NL	NonStatic	Max	-413.078	103.61	1.184E-14	0.
44	2.84042	SLV14-NL	NonStatic	Max	-395.598	123.11	1.423E-14	0.
44	0.	SLV14-NL	NonStatic	Min	-483.565	-34.552	-4.894E-15	0.
44	0.4734	SLV14-NL	NonStatic	Min	-471.723	-5.356	-1.318E-15	0.
44	0.4734	SLV14-NL	NonStatic	Min	-471.723	-3.052	-8.614E-16	0.
44	0.94681	SLV14-NL	NonStatic	Min	-458.754	24.205	2.477E-15	0.
44	0.94681	SLV14-NL	NonStatic	Min	-458.754	26.542	2.760E-15	0.
44	1.42021	SLV14-NL	NonStatic	Min	-444.657	51.859	5.861E-15	0.
44	1.42021	SLV14-NL	NonStatic	Min	-444.657	54.2	6.060E-15	0.
44	1.89361	SLV14-NL	NonStatic	Min	-429.431	77.578	8.923E-15	0.
44	1.89361	SLV14-NL	NonStatic	Min	-429.431	79.897	9.079E-15	0.
44	2.36702	SLV14-NL	NonStatic	Min	-413.078	101.336	1.170E-14	0.
44	2.36702	SLV14-NL	NonStatic	Min	-413.078	103.61	1.184E-14	0.
44	2.84042	SLV14-NL	NonStatic	Min	-395.598	123.11	1.423E-14	0.
44	0.	SLV15-NL	NonStatic	Max	-525.673	-41.128	-5.763E-15	0.
44	0.4734	SLV15-NL	NonStatic	Max	-512.669	-7.247	-1.613E-15	0.
44	0.4734	SLV15-NL	NonStatic	Max	-512.669	-7.046	-1.389E-15	0.
44	0.94681	SLV15-NL	NonStatic	Max	-498.426	24.829	2.514E-15	0.
44	0.94681	SLV15-NL	NonStatic	Max	-498.426	24.899	2.526E-15	0.
44	1.42021	SLV15-NL	NonStatic	Max	-482.944	54.769	6.184E-15	0.
44	1.42021	SLV15-NL	NonStatic	Max	-482.944	54.769	6.094E-15	0.
44	1.89361	SLV15-NL	NonStatic	Max	-466.224	82.632	9.506E-15	0.
44	1.89361	SLV15-NL	NonStatic	Max	-466.224	82.632	9.370E-15	0.
44	2.36702	SLV15-NL	NonStatic	Max	-448.265	108.49	1.254E-14	0.
44	2.36702	SLV15-NL	NonStatic	Max	-448.265	108.49	1.238E-14	0.
44	2.84042	SLV15-NL	NonStatic	Max	-429.068	132.342	1.530E-14	0.
44	0.	SLV15-NL	NonStatic	Min	-525.673	-41.128	-5.763E-15	0.
44	0.4734	SLV15-NL	NonStatic	Min	-512.669	-7.247	-1.613E-15	0.
44	0.4734	SLV15-NL	NonStatic	Min	-512.669	-7.046	-1.389E-15	0.
44	0.94681	SLV15-NL	NonStatic	Min	-498.426	24.829	2.514E-15	0.
44	0.94681	SLV15-NL	NonStatic	Min	-498.426	24.899	2.526E-15	0.
44	1.42021	SLV15-NL	NonStatic	Min	-482.944	54.769	6.184E-15	0.
44	1.42021	SLV15-NL	NonStatic	Min	-482.944	54.769	6.094E-15	0.
44	1.89361	SLV15-NL	NonStatic	Min	-466.224	82.632	9.506E-15	0.
44	1.89361	SLV15-NL	NonStatic	Min	-466.224	82.632	9.370E-15	0.
44	2.36702	SLV15-NL	NonStatic	Min	-448.265	108.49	1.254E-14	0.
44	2.36702	SLV15-NL	NonStatic	Min	-448.265	108.49	1.238E-14	0.
44	2.84042	SLV15-NL	NonStatic	Min	-429.068	132.342	1.530E-14	0.

Table: Element Forces - Frames, Part 1 of 2

Frame	Station	OutputCase	CaseType	StepType	P	V2	V3	T
	m				KN	KN	KN	KN-m
44	0.	SLV16-NL	NonStatic	Max	-527.429	-36.253	-5.276E-15	0.
44	0.4734	SLV16-NL	NonStatic	Max	-514.424	-7.057	-1.701E-15	0.
44	0.4734	SLV16-NL	NonStatic	Max	-514.424	-4.524	-1.157E-15	0.
44	0.94681	SLV16-NL	NonStatic	Max	-500.181	22.733	2.181E-15	0.
44	0.94681	SLV16-NL	NonStatic	Max	-500.181	25.28	2.525E-15	0.
44	1.42021	SLV16-NL	NonStatic	Max	-484.7	50.598	5.625E-15	0.
44	1.42021	SLV16-NL	NonStatic	Max	-484.699	53.123	5.869E-15	0.
44	1.89361	SLV16-NL	NonStatic	Max	-467.979	76.502	8.732E-15	0.
44	1.89361	SLV16-NL	NonStatic	Max	-467.979	78.974	8.921E-15	0.
44	2.36702	SLV16-NL	NonStatic	Max	-450.021	100.413	1.155E-14	0.
44	2.36702	SLV16-NL	NonStatic	Max	-450.02	102.803	1.170E-14	0.
44	2.84042	SLV16-NL	NonStatic	Max	-430.823	122.303	1.409E-14	0.
44	0.	SLV16-NL	NonStatic	Min	-527.429	-36.253	-5.276E-15	0.
44	0.4734	SLV16-NL	NonStatic	Min	-514.424	-7.057	-1.701E-15	0.
44	0.4734	SLV16-NL	NonStatic	Min	-514.424	-4.524	-1.157E-15	0.
44	0.94681	SLV16-NL	NonStatic	Min	-500.181	22.733	2.181E-15	0.
44	0.94681	SLV16-NL	NonStatic	Min	-500.181	25.28	2.525E-15	0.
44	1.42021	SLV16-NL	NonStatic	Min	-484.7	50.598	5.625E-15	0.
44	1.42021	SLV16-NL	NonStatic	Min	-484.699	53.123	5.869E-15	0.
44	1.89361	SLV16-NL	NonStatic	Min	-467.979	76.502	8.732E-15	0.
44	1.89361	SLV16-NL	NonStatic	Min	-467.979	78.974	8.921E-15	0.
44	2.36702	SLV16-NL	NonStatic	Min	-450.021	100.413	1.155E-14	0.
44	2.36702	SLV16-NL	NonStatic	Min	-450.02	102.803	1.170E-14	0.
44	2.84042	SLV16-NL	NonStatic	Min	-430.823	122.303	1.409E-14	0.

Table: Element Forces - Frames, Part 2 of 2

Table: Element Forces - Frames, Part 2 of 2

Frame	Station	OutputCase	StepType	M2	M3	FrameElem	ElemStation
	m			KN-m	KN-m		m
3	0.	SLU 1-NL	Max	-1.205E-13	-984.2017	3-1	0.
3	0.48186	SLU 1-NL	Max	-7.545E-14	-616.1317	3-1	0.48186
3	0.96371	SLU 1-NL	Max	-2.951E-14	-240.9485	3-1	0.96371
3	0.	SLU 1-NL	Min	-1.205E-13	-984.2017	3-1	0.
3	0.48186	SLU 1-NL	Min	-7.545E-14	-616.1317	3-1	0.48186
3	0.96371	SLU 1-NL	Min	-2.951E-14	-240.9485	3-1	0.96371
3	0.	SLU 2-NL	Max	-1.177E-13	-961.315	3-1	0.
3	0.48186	SLU 2-NL	Max	-7.268E-14	-593.4458	3-1	0.48186
3	0.96371	SLU 2-NL	Max	-2.675E-14	-218.4636	3-1	0.96371
3	0.	SLU 2-NL	Min	-1.177E-13	-961.315	3-1	0.
3	0.48186	SLU 2-NL	Min	-7.268E-14	-593.4458	3-1	0.48186
3	0.96371	SLU 2-NL	Min	-2.675E-14	-218.4636	3-1	0.96371
3	0.	SLU 3-NL	Max	-8.338E-14	-680.8184	3-1	0.
3	0.48186	SLU 3-NL	Max	-5.341E-14	-436.1348	3-1	0.48186
3	0.96371	SLU 3-NL	Max	-2.278E-14	-185.9795	3-1	0.96371
3	0.	SLU 3-NL	Min	-8.338E-14	-680.8184	3-1	0.
3	0.48186	SLU 3-NL	Min	-5.341E-14	-436.1348	3-1	0.48186
3	0.96371	SLU 3-NL	Min	-2.278E-14	-185.9795	3-1	0.96371
3	0.	SLU 4-NL	Max	-1.220E-13	-996.3393	3-1	0.
3	0.48186	SLU 4-NL	Max	-7.734E-14	-631.4922	3-1	0.48186
3	0.96371	SLU 4-NL	Max	-3.178E-14	-259.5319	3-1	0.96371
3	0.	SLU 4-NL	Min	-1.220E-13	-996.3393	3-1	0.
3	0.48186	SLU 4-NL	Min	-7.734E-14	-631.4922	3-1	0.48186

Table: Element Forces - Frames, Part 2 of 2

Frame	Station	OutputCase	StepType	M2	M3	FrameElem	ElemStation
	m			KN-m	KN-m		m
3	0.96371	SLU 4-NL	Min	-3.178E-14	-259.5319	3-1	0.96371
3	0.	SLU 5-NL	Max	-8.537E-14	-697.0807	3-1	0.
3	0.48186	SLU 5-NL	Max	-5.581E-14	-455.7179	3-1	0.48186
3	0.96371	SLU 5-NL	Max	-2.558E-14	-208.8833	3-1	0.96371
3	0.	SLU 5-NL	Min	-8.537E-14	-697.0807	3-1	0.
3	0.48186	SLU 5-NL	Min	-5.581E-14	-455.7179	3-1	0.48186
3	0.96371	SLU 5-NL	Min	-2.558E-14	-208.8833	3-1	0.96371
3	0.	SLU 6-NL	Max	-1.191E-13	-972.1851	3-1	0.
3	0.48186	SLU 6-NL	Max	-7.359E-14	-600.9236	3-1	0.48186
3	0.96371	SLU 6-NL	Max	-2.725E-14	-222.5488	3-1	0.96371
3	0.	SLU 6-NL	Min	-1.191E-13	-972.1851	3-1	0.
3	0.48186	SLU 6-NL	Min	-7.359E-14	-600.9236	3-1	0.48186
3	0.96371	SLU 6-NL	Min	-2.725E-14	-222.5488	3-1	0.96371
3	0.	SLU 7-NL	Max	-8.194E-14	-669.1045	3-1	0.
3	0.48186	SLU 7-NL	Max	-5.157E-14	-421.099	3-1	0.48186
3	0.96371	SLU 7-NL	Max	-2.053E-14	-167.6218	3-1	0.96371
3	0.	SLU 7-NL	Min	-8.194E-14	-669.1045	3-1	0.
3	0.48186	SLU 7-NL	Min	-5.157E-14	-421.099	3-1	0.48186
3	0.96371	SLU 7-NL	Min	-2.053E-14	-167.6218	3-1	0.96371
3	0.	SLE-C-NL	Max	-9.112E-14	-744.0355	3-1	0.
3	0.48186	SLE-C-NL	Max	-5.708E-14	-466.0667	3-1	0.48186
3	0.96371	SLE-C-NL	Max	-2.237E-14	-182.6264	3-1	0.96371
3	0.	SLE-C-NL	Min	-9.112E-14	-744.0355	3-1	0.
3	0.48186	SLE-C-NL	Min	-5.708E-14	-466.0667	3-1	0.48186
3	0.96371	SLE-C-NL	Min	-2.237E-14	-182.6264	3-1	0.96371
3	0.	SLE-F-1-NL	Max	-8.834E-14	-721.3405	3-1	0.
3	0.48186	SLE-F-1-NL	Max	-5.512E-14	-450.1082	3-1	0.48186
3	0.96371	SLE-F-1-NL	Max	-2.124E-14	-173.4045	3-1	0.96371
3	0.	SLE-F-1-NL	Min	-8.834E-14	-721.3405	3-1	0.
3	0.48186	SLE-F-1-NL	Min	-5.512E-14	-450.1082	3-1	0.48186
3	0.96371	SLE-F-1-NL	Min	-2.124E-14	-173.4045	3-1	0.96371
3	0.	SLE-F-2-NL	Max	-8.176E-14	-667.6384	3-1	0.
3	0.48186	SLE-F-2-NL	Max	-5.192E-14	-423.955	3-1	0.48186
3	0.96371	SLE-F-2-NL	Max	-2.141E-14	-174.8001	3-1	0.96371
3	0.	SLE-F-2-NL	Min	-8.176E-14	-667.6384	3-1	0.
3	0.48186	SLE-F-2-NL	Min	-5.192E-14	-423.955	3-1	0.48186
3	0.96371	SLE-F-2-NL	Min	-2.141E-14	-174.8001	3-1	0.96371
3	0.	SLE-F-3-NL	Max	-8.056E-14	-657.8067	3-1	0.
3	0.48186	SLE-F-3-NL	Max	-5.051E-14	-412.4358	3-1	0.48186
3	0.96371	SLE-F-3-NL	Max	-1.979E-14	-161.5934	3-1	0.96371
3	0.	SLE-F-3-NL	Min	-8.056E-14	-657.8067	3-1	0.
3	0.48186	SLE-F-3-NL	Min	-5.051E-14	-412.4358	3-1	0.48186
3	0.96371	SLE-F-3-NL	Min	-1.979E-14	-161.5934	3-1	0.96371
3	0.	SLE-QP-NL	Max	-8.058E-14	-657.9695	3-1	0.
3	0.48186	SLE-QP-NL	Max	-5.064E-14	-413.4757	3-1	0.48186
3	0.96371	SLE-QP-NL	Max	-2.002E-14	-163.5105	3-1	0.96371
3	0.	SLE-QP-NL	Min	-8.058E-14	-657.9695	3-1	0.
3	0.48186	SLE-QP-NL	Min	-5.064E-14	-413.4757	3-1	0.48186
3	0.96371	SLE-QP-NL	Min	-2.002E-14	-163.5105	3-1	0.96371
3	0.	SLV1-NL	Max	-8.614E-14	-703.4229	3-1	0.
3	0.48186	SLV1-NL	Max	-5.593E-14	-456.6789	3-1	0.48186
3	0.96371	SLV1-NL	Max	-2.503E-14	-204.3865	3-1	0.96371
3	0.	SLV1-NL	Min	-8.614E-14	-703.4229	3-1	0.
3	0.48186	SLV1-NL	Min	-5.593E-14	-456.6789	3-1	0.48186

Table: Element Forces - Frames, Part 2 of 2

Frame	Station	OutputCase	StepType	M2	M3	FrameElem	ElemStation
	m			KN-m	KN-m		m
3	0.96371	SLV1-NL	Min	-2.503E-14	-204.3865	3-1	0.96371
3	0.	SLV2-NL	Max	-8.264E-14	-674.8417	3-1	0.
3	0.48186	SLV2-NL	Max	-5.129E-14	-418.7747	3-1	0.48186
3	0.96371	SLV2-NL	Max	-1.925E-14	-157.1593	3-1	0.96371
3	0.	SLV2-NL	Min	-8.264E-14	-674.8417	3-1	0.
3	0.48186	SLV2-NL	Min	-5.129E-14	-418.7747	3-1	0.48186
3	0.96371	SLV2-NL	Min	-1.925E-14	-157.1593	3-1	0.96371
3	0.	SLV3-NL	Max	-8.594E-14	-701.7549	3-1	0.
3	0.48186	SLV3-NL	Max	-5.576E-14	-455.2997	3-1	0.48186
3	0.96371	SLV3-NL	Max	-2.492E-14	-203.4496	3-1	0.96371
3	0.	SLV3-NL	Min	-8.594E-14	-701.7549	3-1	0.
3	0.48186	SLV3-NL	Min	-5.576E-14	-455.2997	3-1	0.48186
3	0.96371	SLV3-NL	Min	-2.492E-14	-203.4496	3-1	0.96371
3	0.	SLV4-NL	Max	-8.244E-14	-673.2051	3-1	0.
3	0.48186	SLV4-NL	Max	-5.112E-14	-417.4276	3-1	0.48186
3	0.96371	SLV4-NL	Max	-1.914E-14	-156.2554	3-1	0.96371
3	0.	SLV4-NL	Min	-8.244E-14	-673.2051	3-1	0.
3	0.48186	SLV4-NL	Min	-5.112E-14	-417.4276	3-1	0.48186
3	0.96371	SLV4-NL	Min	-1.914E-14	-156.2554	3-1	0.96371
3	0.	SLV5-NL	Max	-8.378E-14	-684.1467	3-1	0.
3	0.48186	SLV5-NL	Max	-5.313E-14	-433.814	3-1	0.48186
3	0.96371	SLV5-NL	Max	-2.177E-14	-177.7538	3-1	0.96371
3	0.	SLV5-NL	Min	-8.378E-14	-684.1467	3-1	0.
3	0.48186	SLV5-NL	Min	-5.313E-14	-433.814	3-1	0.48186
3	0.96371	SLV5-NL	Min	-2.177E-14	-177.7538	3-1	0.96371
3	0.	SLV6-NL	Max	-8.293E-14	-677.2018	3-1	0.
3	0.48186	SLV6-NL	Max	-5.194E-14	-424.1626	3-1	0.48186
3	0.96371	SLV6-NL	Max	-2.026E-14	-165.3959	3-1	0.96371
3	0.	SLV6-NL	Min	-8.293E-14	-677.2018	3-1	0.
3	0.48186	SLV6-NL	Min	-5.194E-14	-424.1626	3-1	0.48186
3	0.96371	SLV6-NL	Min	-2.026E-14	-165.3959	3-1	0.96371
3	0.	SLV7-NL	Max	-8.310E-14	-678.5775	3-1	0.
3	0.48186	SLV7-NL	Max	-5.256E-14	-429.2064	3-1	0.48186
3	0.96371	SLV7-NL	Max	-2.138E-14	-174.6198	3-1	0.96371
3	0.	SLV7-NL	Min	-8.310E-14	-678.5775	3-1	0.
3	0.48186	SLV7-NL	Min	-5.256E-14	-429.2064	3-1	0.48186
3	0.96371	SLV7-NL	Min	-2.138E-14	-174.6198	3-1	0.96371
3	0.	SLV8-NL	Max	-8.227E-14	-671.7567	3-1	0.
3	0.48186	SLV8-NL	Max	-5.140E-14	-419.6838	3-1	0.48186
3	0.96371	SLV8-NL	Max	-1.989E-14	-162.3955	3-1	0.96371
3	0.	SLV8-NL	Min	-8.227E-14	-671.7567	3-1	0.
3	0.48186	SLV8-NL	Min	-5.140E-14	-419.6838	3-1	0.48186
3	0.96371	SLV8-NL	Min	-1.989E-14	-162.3955	3-1	0.96371
3	0.	SLV9-NL	Max	-8.443E-14	-689.4157	3-1	0.
3	0.48186	SLV9-NL	Max	-5.416E-14	-442.2744	3-1	0.48186
3	0.96371	SLV9-NL	Max	-2.324E-14	-189.7384	3-1	0.96371
3	0.	SLV9-NL	Min	-8.443E-14	-689.4157	3-1	0.
3	0.48186	SLV9-NL	Min	-5.416E-14	-442.2744	3-1	0.48186
3	0.96371	SLV9-NL	Min	-2.324E-14	-189.7384	3-1	0.96371
3	0.	SLV10-NL	Max	-7.990E-14	-652.4705	3-1	0.
3	0.48186	SLV10-NL	Max	-4.946E-14	-403.8454	3-1	0.48186
3	0.96371	SLV10-NL	Max	-1.835E-14	-149.8256	3-1	0.96371
3	0.	SLV10-NL	Min	-7.990E-14	-652.4705	3-1	0.
3	0.48186	SLV10-NL	Min	-4.946E-14	-403.8454	3-1	0.48186

Table: Element Forces - Frames, Part 2 of 2

Frame	Station	OutputCase	StepType	M2	M3	FrameElem	ElemStation
	m			KN-m	KN-m		m
3	0.96371	SLV10-NL	Min	-1.835E-14	-149.8256	3-1	0.96371
3	0.	SLV11-NL	Max	-8.644E-14	-705.8733	3-1	0.
3	0.48186	SLV11-NL	Max	-5.537E-14	-452.1019	3-1	0.48186
3	0.96371	SLV11-NL	Max	-2.361E-14	-192.7822	3-1	0.96371
3	0.	SLV11-NL	Min	-8.644E-14	-705.8733	3-1	0.
3	0.48186	SLV11-NL	Min	-5.537E-14	-452.1019	3-1	0.48186
3	0.96371	SLV11-NL	Min	-2.361E-14	-192.7822	3-1	0.96371
3	0.	SLV12-NL	Max	-8.194E-14	-669.0948	3-1	0.
3	0.48186	SLV12-NL	Max	-5.068E-14	-413.8489	3-1	0.48186
3	0.96371	SLV12-NL	Max	-1.874E-14	-153.0548	3-1	0.96371
3	0.	SLV12-NL	Min	-8.194E-14	-669.0948	3-1	0.
3	0.48186	SLV12-NL	Min	-5.068E-14	-413.8489	3-1	0.48186
3	0.96371	SLV12-NL	Min	-1.874E-14	-153.0548	3-1	0.96371
3	0.	SLV13-NL	Max	-7.990E-14	-652.4452	3-1	0.
3	0.48186	SLV13-NL	Max	-5.052E-14	-412.4873	3-1	0.48186
3	0.96371	SLV13-NL	Max	-2.049E-14	-167.3141	3-1	0.96371
3	0.	SLV13-NL	Min	-7.990E-14	-652.4452	3-1	0.
3	0.48186	SLV13-NL	Min	-5.052E-14	-412.4873	3-1	0.48186
3	0.96371	SLV13-NL	Min	-2.049E-14	-167.3141	3-1	0.96371
3	0.	SLV14-NL	Max	-7.873E-14	-642.9149	3-1	0.
3	0.48186	SLV14-NL	Max	-4.930E-14	-402.5908	3-1	0.48186
3	0.96371	SLV14-NL	Max	-1.923E-14	-157.0513	3-1	0.96371
3	0.	SLV14-NL	Min	-7.873E-14	-642.9149	3-1	0.
3	0.48186	SLV14-NL	Min	-4.930E-14	-402.5908	3-1	0.48186
3	0.96371	SLV14-NL	Min	-1.923E-14	-157.0513	3-1	0.96371
3	0.	SLV15-NL	Max	-8.665E-14	-707.557	3-1	0.
3	0.48186	SLV15-NL	Max	-5.456E-14	-445.4973	3-1	0.48186
3	0.96371	SLV15-NL	Max	-2.176E-14	-177.7101	3-1	0.96371
3	0.	SLV15-NL	Min	-8.665E-14	-707.557	3-1	0.
3	0.48186	SLV15-NL	Min	-5.456E-14	-445.4973	3-1	0.48186
3	0.96371	SLV15-NL	Min	-2.176E-14	-177.7101	3-1	0.96371
3	0.	SLV16-NL	Max	-8.554E-14	-698.5084	3-1	0.
3	0.48186	SLV16-NL	Max	-5.341E-14	-436.1114	3-1	0.48186
3	0.96371	SLV16-NL	Max	-2.057E-14	-167.9868	3-1	0.96371
3	0.	SLV16-NL	Min	-8.554E-14	-698.5084	3-1	0.
3	0.48186	SLV16-NL	Min	-5.341E-14	-436.1114	3-1	0.48186
3	0.96371	SLV16-NL	Min	-2.057E-14	-167.9868	3-1	0.96371
4	0.	SLU 1-NL	Max	-2.951E-14	-240.9485	4-1	0.
4	0.48186	SLU 1-NL	Max	-7.545E-14	-616.1317	4-1	0.48186
4	0.96371	SLU 1-NL	Max	-1.205E-13	-984.2017	4-1	0.96371
4	0.	SLU 1-NL	Min	-2.951E-14	-240.9485	4-1	0.
4	0.48186	SLU 1-NL	Min	-7.545E-14	-616.1317	4-1	0.48186
4	0.96371	SLU 1-NL	Min	-1.205E-13	-984.2017	4-1	0.96371
4	0.	SLU 2-NL	Max	-2.675E-14	-218.4636	4-1	0.
4	0.48186	SLU 2-NL	Max	-7.268E-14	-593.4458	4-1	0.48186
4	0.96371	SLU 2-NL	Max	-1.177E-13	-961.315	4-1	0.96371
4	0.	SLU 2-NL	Min	-2.675E-14	-218.4636	4-1	0.
4	0.48186	SLU 2-NL	Min	-7.268E-14	-593.4458	4-1	0.48186
4	0.96371	SLU 2-NL	Min	-1.177E-13	-961.315	4-1	0.96371
4	0.	SLU 3-NL	Max	-2.278E-14	-185.9795	4-1	0.
4	0.48186	SLU 3-NL	Max	-5.341E-14	-436.1348	4-1	0.48186
4	0.96371	SLU 3-NL	Max	-8.338E-14	-680.8184	4-1	0.96371
4	0.	SLU 3-NL	Min	-2.278E-14	-185.9795	4-1	0.
4	0.48186	SLU 3-NL	Min	-5.341E-14	-436.1348	4-1	0.48186

Table: Element Forces - Frames, Part 2 of 2

Frame	Station	OutputCase	StepType	M2	M3	FrameElem	ElemStation
	m			KN-m	KN-m		m
4	0.96371	SLU 3-NL	Min	-8.338E-14	-680.8184	4-1	0.96371
4	0.	SLU 4-NL	Max	-2.725E-14	-222.5488	4-1	0.
4	0.48186	SLU 4-NL	Max	-7.359E-14	-600.9236	4-1	0.48186
4	0.96371	SLU 4-NL	Max	-1.191E-13	-972.1851	4-1	0.96371
4	0.	SLU 4-NL	Min	-2.725E-14	-222.5488	4-1	0.
4	0.48186	SLU 4-NL	Min	-7.359E-14	-600.9236	4-1	0.48186
4	0.96371	SLU 4-NL	Min	-1.191E-13	-972.1851	4-1	0.96371
4	0.	SLU 5-NL	Max	-2.053E-14	-167.6218	4-1	0.
4	0.48186	SLU 5-NL	Max	-5.157E-14	-421.099	4-1	0.48186
4	0.96371	SLU 5-NL	Max	-8.194E-14	-669.1045	4-1	0.96371
4	0.	SLU 5-NL	Min	-2.053E-14	-167.6218	4-1	0.
4	0.48186	SLU 5-NL	Min	-5.157E-14	-421.099	4-1	0.48186
4	0.96371	SLU 5-NL	Min	-8.194E-14	-669.1045	4-1	0.96371
4	0.	SLU 6-NL	Max	-3.178E-14	-259.5319	4-1	0.
4	0.48186	SLU 6-NL	Max	-7.734E-14	-631.4922	4-1	0.48186
4	0.96371	SLU 6-NL	Max	-1.220E-13	-996.3393	4-1	0.96371
4	0.	SLU 6-NL	Min	-3.178E-14	-259.5319	4-1	0.
4	0.48186	SLU 6-NL	Min	-7.734E-14	-631.4922	4-1	0.48186
4	0.96371	SLU 6-NL	Min	-1.220E-13	-996.3393	4-1	0.96371
4	0.	SLU 7-NL	Max	-2.558E-14	-208.8833	4-1	0.
4	0.48186	SLU 7-NL	Max	-5.581E-14	-455.7179	4-1	0.48186
4	0.96371	SLU 7-NL	Max	-8.537E-14	-697.0807	4-1	0.96371
4	0.	SLU 7-NL	Min	-2.558E-14	-208.8833	4-1	0.
4	0.48186	SLU 7-NL	Min	-5.581E-14	-455.7179	4-1	0.48186
4	0.96371	SLU 7-NL	Min	-8.537E-14	-697.0807	4-1	0.96371
4	0.	SLE-C-NL	Max	-2.237E-14	-182.6264	4-1	0.
4	0.48186	SLE-C-NL	Max	-5.708E-14	-466.0667	4-1	0.48186
4	0.96371	SLE-C-NL	Max	-9.112E-14	-744.0355	4-1	0.96371
4	0.	SLE-C-NL	Min	-2.237E-14	-182.6264	4-1	0.
4	0.48186	SLE-C-NL	Min	-5.708E-14	-466.0667	4-1	0.48186
4	0.96371	SLE-C-NL	Min	-9.112E-14	-744.0355	4-1	0.96371
4	0.	SLE-F-1-NL	Max	-2.124E-14	-173.4045	4-1	0.
4	0.48186	SLE-F-1-NL	Max	-5.512E-14	-450.1082	4-1	0.48186
4	0.96371	SLE-F-1-NL	Max	-8.834E-14	-721.3405	4-1	0.96371
4	0.	SLE-F-1-NL	Min	-2.124E-14	-173.4045	4-1	0.
4	0.48186	SLE-F-1-NL	Min	-5.512E-14	-450.1082	4-1	0.48186
4	0.96371	SLE-F-1-NL	Min	-8.834E-14	-721.3405	4-1	0.96371
4	0.	SLE-F-2-NL	Max	-1.979E-14	-161.5934	4-1	0.
4	0.48186	SLE-F-2-NL	Max	-5.051E-14	-412.4358	4-1	0.48186
4	0.96371	SLE-F-2-NL	Max	-8.056E-14	-657.8067	4-1	0.96371
4	0.	SLE-F-2-NL	Min	-1.979E-14	-161.5934	4-1	0.
4	0.48186	SLE-F-2-NL	Min	-5.051E-14	-412.4358	4-1	0.48186
4	0.96371	SLE-F-2-NL	Min	-8.056E-14	-657.8067	4-1	0.96371
4	0.	SLE-F-3-NL	Max	-2.141E-14	-174.8001	4-1	0.
4	0.48186	SLE-F-3-NL	Max	-5.192E-14	-423.955	4-1	0.48186
4	0.96371	SLE-F-3-NL	Max	-8.176E-14	-667.6384	4-1	0.96371
4	0.	SLE-F-3-NL	Min	-2.141E-14	-174.8001	4-1	0.
4	0.48186	SLE-F-3-NL	Min	-5.192E-14	-423.955	4-1	0.48186
4	0.96371	SLE-F-3-NL	Min	-8.176E-14	-667.6384	4-1	0.96371
4	0.	SLE-QP-NL	Max	-2.002E-14	-163.5105	4-1	0.
4	0.48186	SLE-QP-NL	Max	-5.064E-14	-413.4757	4-1	0.48186
4	0.96371	SLE-QP-NL	Max	-8.058E-14	-657.9695	4-1	0.96371
4	0.	SLE-QP-NL	Min	-2.002E-14	-163.5105	4-1	0.
4	0.48186	SLE-QP-NL	Min	-5.064E-14	-413.4757	4-1	0.48186

Table: Element Forces - Frames, Part 2 of 2

Frame	Station	OutputCase	StepType	M2	M3	FrameElem	ElemStation
	m			KN-m	KN-m		m
4	0.96371	SLE-QP-NL	Min	-8.058E-14	-657.9695	4-1	0.96371
4	0.	SLV1-NL	Max	-2.096E-14	-171.1158	4-1	0.
4	0.48186	SLV1-NL	Max	-5.301E-14	-432.8849	4-1	0.48186
4	0.96371	SLV1-NL	Max	-8.439E-14	-689.1055	4-1	0.96371
4	0.	SLV1-NL	Min	-2.096E-14	-171.1158	4-1	0.
4	0.48186	SLV1-NL	Min	-5.301E-14	-432.8849	4-1	0.48186
4	0.96371	SLV1-NL	Min	-8.439E-14	-689.1055	4-1	0.96371
4	0.	SLV2-NL	Max	-2.317E-14	-189.1952	4-1	0.
4	0.48186	SLV2-NL	Max	-5.406E-14	-441.405	4-1	0.48186
4	0.96371	SLV2-NL	Max	-8.426E-14	-688.0664	4-1	0.96371
4	0.	SLV2-NL	Min	-2.317E-14	-189.1952	4-1	0.
4	0.48186	SLV2-NL	Min	-5.406E-14	-441.405	4-1	0.48186
4	0.96371	SLV2-NL	Min	-8.426E-14	-688.0664	4-1	0.96371
4	0.	SLV3-NL	Max	-2.084E-14	-170.212	4-1	0.
4	0.48186	SLV3-NL	Max	-5.285E-14	-431.538	4-1	0.48186
4	0.96371	SLV3-NL	Max	-8.419E-14	-687.469	4-1	0.96371
4	0.	SLV3-NL	Min	-2.084E-14	-170.212	4-1	0.
4	0.48186	SLV3-NL	Min	-5.285E-14	-431.538	4-1	0.48186
4	0.96371	SLV3-NL	Min	-8.419E-14	-687.469	4-1	0.96371
4	0.	SLV4-NL	Max	-2.305E-14	-188.2582	4-1	0.
4	0.48186	SLV4-NL	Max	-5.389E-14	-440.0255	4-1	0.48186
4	0.96371	SLV4-NL	Max	-8.406E-14	-686.3982	4-1	0.96371
4	0.	SLV4-NL	Min	-2.305E-14	-188.2582	4-1	0.
4	0.48186	SLV4-NL	Min	-5.389E-14	-440.0255	4-1	0.48186
4	0.96371	SLV4-NL	Min	-8.406E-14	-686.3982	4-1	0.96371
4	0.	SLV5-NL	Max	-2.077E-14	-169.5811	4-1	0.
4	0.48186	SLV5-NL	Max	-5.246E-14	-428.3927	4-1	0.48186
4	0.96371	SLV5-NL	Max	-8.346E-14	-681.4768	4-1	0.96371
4	0.	SLV5-NL	Min	-2.077E-14	-169.5811	4-1	0.
4	0.48186	SLV5-NL	Min	-5.246E-14	-428.3927	4-1	0.48186
4	0.96371	SLV5-NL	Min	-8.346E-14	-681.4768	4-1	0.96371
4	0.	SLV6-NL	Max	-2.121E-14	-173.1951	4-1	0.
4	0.48186	SLV6-NL	Max	-5.257E-14	-429.2283	4-1	0.48186
4	0.96371	SLV6-NL	Max	-8.322E-14	-679.5339	4-1	0.96371
4	0.	SLV6-NL	Min	-2.121E-14	-173.1951	4-1	0.
4	0.48186	SLV6-NL	Min	-5.257E-14	-429.2283	4-1	0.48186
4	0.96371	SLV6-NL	Min	-8.322E-14	-679.5339	4-1	0.96371
4	0.	SLV7-NL	Max	-2.040E-14	-166.5808	4-1	0.
4	0.48186	SLV7-NL	Max	-5.191E-14	-423.9141	4-1	0.48186
4	0.96371	SLV7-NL	Max	-8.279E-14	-676.032	4-1	0.96371
4	0.	SLV7-NL	Min	-2.040E-14	-166.5808	4-1	0.
4	0.48186	SLV7-NL	Min	-5.191E-14	-423.9141	4-1	0.48186
4	0.96371	SLV7-NL	Min	-8.279E-14	-676.032	4-1	0.96371
4	0.	SLV8-NL	Max	-2.083E-14	-170.061	4-1	0.
4	0.48186	SLV8-NL	Max	-5.200E-14	-424.6204	4-1	0.48186
4	0.96371	SLV8-NL	Max	-8.254E-14	-673.9644	4-1	0.96371
4	0.	SLV8-NL	Min	-2.083E-14	-170.061	4-1	0.
4	0.48186	SLV8-NL	Min	-5.200E-14	-424.6204	4-1	0.48186
4	0.96371	SLV8-NL	Min	-8.254E-14	-673.9644	4-1	0.96371
4	0.	SLV9-NL	Max	-2.006E-14	-163.7805	4-1	0.
4	0.48186	SLV9-NL	Max	-5.118E-14	-417.9534	4-1	0.48186
4	0.96371	SLV9-NL	Max	-8.165E-14	-666.7315	4-1	0.96371
4	0.	SLV9-NL	Min	-2.006E-14	-163.7805	4-1	0.
4	0.48186	SLV9-NL	Min	-5.118E-14	-417.9534	4-1	0.48186

Table: Element Forces - Frames, Part 2 of 2

Frame	Station	OutputCase	StepType	M2	M3	FrameElem	ElemStation
	m			KN-m	KN-m		m
4	0.96371	SLV9-NL	Min	-8.165E-14	-666.7315	4-1	0.96371
4	0.	SLV10-NL	Max	-2.138E-14	-174.5452	4-1	0.
4	0.48186	SLV10-NL	Max	-5.229E-14	-426.9946	4-1	0.48186
4	0.96371	SLV10-NL	Max	-8.255E-14	-674.0494	4-1	0.96371
4	0.	SLV10-NL	Min	-2.138E-14	-174.5452	4-1	0.
4	0.48186	SLV10-NL	Min	-5.229E-14	-426.9946	4-1	0.48186
4	0.96371	SLV10-NL	Min	-8.255E-14	-674.0494	4-1	0.96371
4	0.	SLV11-NL	Max	-2.045E-14	-167.0104	4-1	0.
4	0.48186	SLV11-NL	Max	-5.241E-14	-427.9579	4-1	0.48186
4	0.96371	SLV11-NL	Max	-8.369E-14	-683.3571	4-1	0.96371
4	0.	SLV11-NL	Min	-2.045E-14	-167.0104	4-1	0.
4	0.48186	SLV11-NL	Min	-5.241E-14	-427.9579	4-1	0.48186
4	0.96371	SLV11-NL	Min	-8.369E-14	-683.3571	4-1	0.96371
4	0.	SLV12-NL	Max	-2.175E-14	-177.5885	4-1	0.
4	0.48186	SLV12-NL	Max	-5.350E-14	-436.8213	4-1	0.48186
4	0.96371	SLV12-NL	Max	-8.456E-14	-690.5058	4-1	0.96371
4	0.	SLV12-NL	Min	-2.175E-14	-177.5885	4-1	0.
4	0.48186	SLV12-NL	Min	-5.350E-14	-436.8213	4-1	0.48186
4	0.96371	SLV12-NL	Min	-8.456E-14	-690.5058	4-1	0.96371
4	0.	SLV13-NL	Max	-1.973E-14	-161.1293	4-1	0.
4	0.48186	SLV13-NL	Max	-4.981E-14	-406.714	4-1	0.48186
4	0.96371	SLV13-NL	Max	-7.924E-14	-647.0832	4-1	0.96371
4	0.	SLV13-NL	Min	-1.973E-14	-161.1293	4-1	0.
4	0.48186	SLV13-NL	Min	-4.981E-14	-406.714	4-1	0.48186
4	0.96371	SLV13-NL	Min	-7.924E-14	-647.0832	4-1	0.96371
4	0.	SLV14-NL	Max	-1.995E-14	-162.8713	4-1	0.
4	0.48186	SLV14-NL	Max	-4.997E-14	-408.0194	4-1	0.48186
4	0.96371	SLV14-NL	Max	-7.935E-14	-647.9521	4-1	0.96371
4	0.	SLV14-NL	Min	-1.995E-14	-162.8713	4-1	0.
4	0.48186	SLV14-NL	Min	-4.997E-14	-408.0194	4-1	0.48186
4	0.96371	SLV14-NL	Min	-7.935E-14	-647.9521	4-1	0.96371
4	0.	SLV15-NL	Max	-2.107E-14	-172.0807	4-1	0.
4	0.48186	SLV15-NL	Max	-5.391E-14	-440.2485	4-1	0.48186
4	0.96371	SLV15-NL	Max	-8.605E-14	-702.6887	4-1	0.96371
4	0.	SLV15-NL	Min	-2.107E-14	-172.0807	4-1	0.
4	0.48186	SLV15-NL	Min	-5.391E-14	-440.2485	4-1	0.48186
4	0.96371	SLV15-NL	Min	-8.605E-14	-702.6887	4-1	0.96371
4	0.	SLV16-NL	Max	-2.124E-14	-173.4277	4-1	0.
4	0.48186	SLV16-NL	Max	-5.403E-14	-441.1881	4-1	0.48186
4	0.96371	SLV16-NL	Max	-8.612E-14	-703.2209	4-1	0.96371
4	0.	SLV16-NL	Min	-2.124E-14	-173.4277	4-1	0.
4	0.48186	SLV16-NL	Min	-5.403E-14	-441.1881	4-1	0.48186
4	0.96371	SLV16-NL	Min	-8.612E-14	-703.2209	4-1	0.96371
7	0.	SLU 1-NL	Max	-2.626E-14	-241.3665	7-1	0.
7	0.25635	SLU 1-NL	Max	-1.296E-14	-130.6126	7-1	0.25635
7	0.5127	SLU 1-NL	Max	5.596E-16	-18.041	7-1	0.5127
7	0.	SLU 1-NL	Min	-2.626E-14	-241.3665	7-1	0.
7	0.25635	SLU 1-NL	Min	-1.296E-14	-130.6126	7-1	0.25635
7	0.5127	SLU 1-NL	Min	5.596E-16	-18.041	7-1	0.5127
7	0.	SLU 2-NL	Max	-2.424E-14	-218.8787	7-1	0.
7	0.25635	SLU 2-NL	Max	-9.769E-15	-98.4076	7-1	0.25635
7	0.5127	SLU 2-NL	Max	4.921E-15	23.8803	7-1	0.5127
7	0.	SLU 2-NL	Min	-2.424E-14	-218.8787	7-1	0.
7	0.25635	SLU 2-NL	Min	-9.769E-15	-98.4076	7-1	0.25635

Table: Element Forces - Frames, Part 2 of 2

Frame	Station	OutputCase	StepType	M2	M3	FrameElem	ElemStation
	m			KN-m	KN-m		m
7	0.5127	SLU 2-NL	Min	4.921E-15	23.8803	7-1	0.5127
7	0.	SLU 3-NL	Max	-1.979E-14	-186.1737	7-1	0.
7	0.25635	SLU 3-NL	Max	-1.223E-14	-123.1937	7-1	0.25635
7	0.5127	SLU 3-NL	Max	-4.492E-15	-58.8153	7-1	0.5127
7	0.	SLU 3-NL	Min	-1.979E-14	-186.1737	7-1	0.
7	0.25635	SLU 3-NL	Min	-1.223E-14	-123.1937	7-1	0.25635
7	0.5127	SLU 3-NL	Min	-4.492E-15	-58.8153	7-1	0.5127
7	0.	SLU 4-NL	Max	-2.814E-14	-260.2814	7-1	0.
7	0.25635	SLU 4-NL	Max	-1.485E-14	-149.6555	7-1	0.25635
7	0.5127	SLU 4-NL	Max	-1.345E-15	-37.2117	7-1	0.5127
7	0.	SLU 4-NL	Min	-2.814E-14	-260.2814	7-1	0.
7	0.25635	SLU 4-NL	Min	-1.485E-14	-149.6555	7-1	0.25635
7	0.5127	SLU 4-NL	Min	-1.345E-15	-37.2117	7-1	0.5127
7	0.	SLU 5-NL	Max	-2.207E-14	-209.318	7-1	0.
7	0.25635	SLU 5-NL	Max	-1.461E-14	-147.2197	7-1	0.25635
7	0.5127	SLU 5-NL	Max	-6.981E-15	-83.7228	7-1	0.5127
7	0.	SLU 5-NL	Min	-2.207E-14	-209.318	7-1	0.
7	0.25635	SLU 5-NL	Min	-1.461E-14	-147.2197	7-1	0.25635
7	0.5127	SLU 5-NL	Min	-6.981E-15	-83.7228	7-1	0.5127
7	0.	SLU 6-NL	Max	-2.444E-14	-222.6181	7-1	0.
7	0.25635	SLU 6-NL	Max	-1.095E-14	-110.3229	7-1	0.25635
7	0.5127	SLU 6-NL	Max	2.757E-15	3.7895	7-1	0.5127
7	0.	SLU 6-NL	Min	-2.444E-14	-222.6181	7-1	0.
7	0.25635	SLU 6-NL	Min	-1.095E-14	-110.3229	7-1	0.25635
7	0.5127	SLU 6-NL	Min	2.757E-15	3.7895	7-1	0.5127
7	0.	SLU 7-NL	Max	-1.796E-14	-167.5563	7-1	0.
7	0.25635	SLU 7-NL	Max	-1.030E-14	-103.7392	7-1	0.25635
7	0.5127	SLU 7-NL	Max	-2.461E-15	-38.5242	7-1	0.5127
7	0.	SLU 7-NL	Min	-1.796E-14	-167.5563	7-1	0.
7	0.25635	SLU 7-NL	Min	-1.030E-14	-103.7392	7-1	0.25635
7	0.5127	SLU 7-NL	Min	-2.461E-15	-38.5242	7-1	0.5127
7	0.	SLE-C-NL	Max	-1.989E-14	-182.866	7-1	0.
7	0.25635	SLE-C-NL	Max	-9.860E-15	-99.3491	7-1	0.25635
7	0.5127	SLE-C-NL	Max	3.401E-16	-14.4345	7-1	0.5127
7	0.	SLE-C-NL	Min	-1.989E-14	-182.866	7-1	0.
7	0.25635	SLE-C-NL	Min	-9.860E-15	-99.3491	7-1	0.25635
7	0.5127	SLE-C-NL	Min	3.401E-16	-14.4345	7-1	0.5127
7	0.	SLE-F-1-NL	Max	-1.897E-14	-173.6337	7-1	0.
7	0.25635	SLE-F-1-NL	Max	-8.968E-15	-90.352	7-1	0.25635
7	0.5127	SLE-F-1-NL	Max	1.204E-15	-5.6728	7-1	0.5127
7	0.	SLE-F-1-NL	Min	-1.897E-14	-173.6337	7-1	0.
7	0.25635	SLE-F-1-NL	Min	-8.968E-15	-90.352	7-1	0.25635
7	0.5127	SLE-F-1-NL	Min	1.204E-15	-5.6728	7-1	0.5127
7	0.	SLE-F-2-NL	Max	-1.885E-14	-175.0207	7-1	0.
7	0.25635	SLE-F-2-NL	Max	-1.032E-14	-103.9785	7-1	0.25635
7	0.5127	SLE-F-2-NL	Max	-1.617E-15	-31.5385	7-1	0.5127
7	0.	SLE-F-2-NL	Min	-1.885E-14	-175.0207	7-1	0.
7	0.25635	SLE-F-2-NL	Min	-1.032E-14	-103.9785	7-1	0.25635
7	0.5127	SLE-F-2-NL	Min	-1.617E-15	-31.5385	7-1	0.5127
7	0.	SLE-F-3-NL	Max	-1.754E-14	-161.757	7-1	0.
7	0.25635	SLE-F-3-NL	Max	-8.987E-15	-90.5388	7-1	0.25635
7	0.5127	SLE-F-3-NL	Max	-2.631E-16	-17.923	7-1	0.5127
7	0.	SLE-F-3-NL	Min	-1.754E-14	-161.757	7-1	0.
7	0.25635	SLE-F-3-NL	Min	-8.987E-15	-90.5388	7-1	0.25635

Table: Element Forces - Frames, Part 2 of 2

Frame	Station	OutputCase	StepType	M2	M3	FrameElem	ElemStation
	m			KN-m	KN-m		m
7	0.5127	SLE-F-3-NL	Min	-2.631E-16	-17.923	7-1	0.5127
7	0.	SLE-QP-NL	Max	-1.776E-14	-163.7027	7-1	0.
7	0.25635	SLE-QP-NL	Max	-9.033E-15	-91.0023	7-1	0.25635
7	0.5127	SLE-QP-NL	Max	-1.311E-16	-16.9042	7-1	0.5127
7	0.	SLE-QP-NL	Min	-1.776E-14	-163.7027	7-1	0.
7	0.25635	SLE-QP-NL	Min	-9.033E-15	-91.0023	7-1	0.25635
7	0.5127	SLE-QP-NL	Min	-1.311E-16	-16.9042	7-1	0.5127
7	0.	SLV1-NL	Max	-2.172E-14	-204.8209	7-1	0.
7	0.25635	SLV1-NL	Max	-1.368E-14	-137.8623	7-1	0.25635
7	0.5127	SLV1-NL	Max	-5.488E-15	-69.6646	7-1	0.5127
7	0.	SLV1-NL	Min	-2.172E-14	-204.8209	7-1	0.
7	0.25635	SLV1-NL	Min	-1.368E-14	-137.8623	7-1	0.25635
7	0.5127	SLV1-NL	Min	-5.488E-15	-69.6646	7-1	0.5127
7	0.	SLV2-NL	Max	-1.713E-14	-157.1189	7-1	0.
7	0.25635	SLV2-NL	Max	-8.277E-15	-83.3813	7-1	0.25635
7	0.5127	SLV2-NL	Max	7.728E-16	-8.0476	7-1	0.5127
7	0.	SLV2-NL	Min	-1.713E-14	-157.1189	7-1	0.
7	0.25635	SLV2-NL	Min	-8.277E-15	-83.3813	7-1	0.25635
7	0.5127	SLV2-NL	Min	7.728E-16	-8.0476	7-1	0.5127
7	0.	SLV3-NL	Max	-2.163E-14	-203.8807	7-1	0.
7	0.25635	SLV3-NL	Max	-1.359E-14	-136.9419	7-1	0.25635
7	0.5127	SLV3-NL	Max	-5.403E-15	-68.8033	7-1	0.5127
7	0.	SLV3-NL	Min	-2.163E-14	-203.8807	7-1	0.
7	0.25635	SLV3-NL	Min	-1.359E-14	-136.9419	7-1	0.25635
7	0.5127	SLV3-NL	Min	-5.403E-15	-68.8033	7-1	0.5127
7	0.	SLV4-NL	Max	-1.704E-14	-156.2143	7-1	0.
7	0.25635	SLV4-NL	Max	-8.189E-15	-82.496	7-1	0.25635
7	0.5127	SLV4-NL	Max	8.537E-16	-7.2208	7-1	0.5127
7	0.	SLV4-NL	Min	-1.704E-14	-156.2143	7-1	0.
7	0.25635	SLV4-NL	Min	-8.189E-15	-82.496	7-1	0.25635
7	0.5127	SLV4-NL	Min	8.537E-16	-7.2208	7-1	0.5127
7	0.	SLV5-NL	Max	-1.919E-14	-178.0194	7-1	0.
7	0.25635	SLV5-NL	Max	-1.043E-14	-105.0976	7-1	0.25635
7	0.5127	SLV5-NL	Max	-1.501E-15	-30.7664	7-1	0.5127
7	0.	SLV5-NL	Min	-1.919E-14	-178.0194	7-1	0.
7	0.25635	SLV5-NL	Min	-1.043E-14	-105.0976	7-1	0.25635
7	0.5127	SLV5-NL	Min	-1.501E-15	-30.7664	7-1	0.5127
7	0.	SLV6-NL	Max	-1.799E-14	-165.5406	7-1	0.
7	0.25635	SLV6-NL	Max	-8.993E-15	-90.6014	7-1	0.25635
7	0.5127	SLV6-NL	Max	1.916E-16	-14.1456	7-1	0.5127
7	0.	SLV6-NL	Min	-1.799E-14	-165.5406	7-1	0.
7	0.25635	SLV6-NL	Min	-8.993E-15	-90.6014	7-1	0.25635
7	0.5127	SLV6-NL	Min	1.916E-16	-14.1456	7-1	0.5127
7	0.	SLV7-NL	Max	-1.887E-14	-174.8772	7-1	0.
7	0.25635	SLV7-NL	Max	-1.013E-14	-102.0212	7-1	0.25635
7	0.5127	SLV7-NL	Max	-1.219E-15	-27.8865	7-1	0.5127
7	0.	SLV7-NL	Min	-1.887E-14	-174.8772	7-1	0.
7	0.25635	SLV7-NL	Min	-1.013E-14	-102.0212	7-1	0.25635
7	0.5127	SLV7-NL	Min	-1.219E-15	-27.8865	7-1	0.5127
7	0.	SLV8-NL	Max	-1.769E-14	-162.5349	7-1	0.
7	0.25635	SLV8-NL	Max	-8.701E-15	-87.6603	7-1	0.25635
7	0.5127	SLV8-NL	Max	4.602E-16	-11.3997	7-1	0.5127
7	0.	SLV8-NL	Min	-1.769E-14	-162.5349	7-1	0.
7	0.25635	SLV8-NL	Min	-8.701E-15	-87.6603	7-1	0.25635

Table: Element Forces - Frames, Part 2 of 2

Frame	Station	OutputCase	StepType	M2	M3	FrameElem	ElemStation
	m			KN-m	KN-m		m
7	0.5127	SLV8-NL	Min	4.602E-16	-11.3997	7-1	0.5127
7	0.	SLV9-NL	Max	-2.030E-14	-189.9912	7-1	0.
7	0.25635	SLV9-NL	Max	-1.195E-14	-120.4166	7-1	0.25635
7	0.5127	SLV9-NL	Max	-3.437E-15	-49.5519	7-1	0.5127
7	0.	SLV9-NL	Min	-2.030E-14	-189.9912	7-1	0.
7	0.25635	SLV9-NL	Min	-1.195E-14	-120.4166	7-1	0.25635
7	0.5127	SLV9-NL	Min	-3.437E-15	-49.5519	7-1	0.5127
7	0.	SLV10-NL	Max	-1.645E-14	-149.9694	7-1	0.
7	0.25635	SLV10-NL	Max	-7.419E-15	-74.7303	7-1	0.25635
7	0.5127	SLV10-NL	Max	1.796E-15	1.975	7-1	0.5127
7	0.	SLV10-NL	Min	-1.645E-14	-149.9694	7-1	0.
7	0.25635	SLV10-NL	Min	-7.419E-15	-74.7303	7-1	0.25635
7	0.5127	SLV10-NL	Min	1.796E-15	1.975	7-1	0.5127
7	0.	SLV11-NL	Max	-2.066E-14	-193.0461	7-1	0.
7	0.25635	SLV11-NL	Max	-1.200E-14	-120.9016	7-1	0.25635
7	0.5127	SLV11-NL	Max	-3.172E-15	-47.4277	7-1	0.5127
7	0.	SLV11-NL	Min	-2.066E-14	-193.0461	7-1	0.
7	0.25635	SLV11-NL	Min	-1.200E-14	-120.9016	7-1	0.25635
7	0.5127	SLV11-NL	Min	-3.172E-15	-47.4277	7-1	0.5127
7	0.	SLV12-NL	Max	-1.683E-14	-153.2089	7-1	0.
7	0.25635	SLV12-NL	Max	-7.485E-15	-75.4014	7-1	0.25635
7	0.5127	SLV12-NL	Max	2.043E-15	3.9114	7-1	0.5127
7	0.	SLV12-NL	Min	-1.683E-14	-153.2089	7-1	0.
7	0.25635	SLV12-NL	Min	-7.485E-15	-75.4014	7-1	0.25635
7	0.5127	SLV12-NL	Min	2.043E-15	3.9114	7-1	0.5127
7	0.	SLV13-NL	Max	-1.808E-14	-167.5054	7-1	0.
7	0.25635	SLV13-NL	Max	-9.699E-15	-97.7268	7-1	0.25635
7	0.5127	SLV13-NL	Max	-1.160E-15	-26.6423	7-1	0.5127
7	0.	SLV13-NL	Min	-1.808E-14	-167.5054	7-1	0.
7	0.25635	SLV13-NL	Min	-9.699E-15	-97.7268	7-1	0.25635
7	0.5127	SLV13-NL	Min	-1.160E-15	-26.6423	7-1	0.5127
7	0.	SLV14-NL	Max	-1.709E-14	-157.2282	7-1	0.
7	0.25635	SLV14-NL	Max	-8.517E-15	-85.8036	7-1	0.25635
7	0.5127	SLV14-NL	Max	2.268E-16	-13.0203	7-1	0.5127
7	0.	SLV14-NL	Min	-1.709E-14	-157.2282	7-1	0.
7	0.25635	SLV14-NL	Min	-8.517E-15	-85.8036	7-1	0.25635
7	0.5127	SLV14-NL	Min	2.268E-16	-13.0203	7-1	0.5127
7	0.	SLV15-NL	Max	-1.929E-14	-177.9371	7-1	0.
7	0.25635	SLV15-NL	Max	-9.894E-15	-99.6842	7-1	0.25635
7	0.5127	SLV15-NL	Max	-3.208E-16	-19.9947	7-1	0.5127
7	0.	SLV15-NL	Min	-1.929E-14	-177.9371	7-1	0.
7	0.25635	SLV15-NL	Min	-9.894E-15	-99.6842	7-1	0.25635
7	0.5127	SLV15-NL	Min	-3.208E-16	-19.9947	7-1	0.5127
7	0.	SLV16-NL	Max	-1.836E-14	-168.1984	7-1	0.
7	0.25635	SLV16-NL	Max	-8.766E-15	-88.3122	7-1	0.25635
7	0.5127	SLV16-NL	Max	1.010E-15	-6.9366	7-1	0.5127
7	0.	SLV16-NL	Min	-1.836E-14	-168.1984	7-1	0.
7	0.25635	SLV16-NL	Min	-8.766E-15	-88.3122	7-1	0.25635
7	0.5127	SLV16-NL	Min	1.010E-15	-6.9366	7-1	0.5127
8	0.	SLU 1-NL	Max	-3.784E-15	-18.8184	8-1	0.
8	0.25635	SLU 1-NL	Max	7.197E-15	72.6273	8-1	0.25635
8	0.5127	SLU 1-NL	Max	1.840E-14	165.9223	8-1	0.5127
8	0.	SLU 1-NL	Min	-3.784E-15	-18.8184	8-1	0.
8	0.25635	SLU 1-NL	Min	7.197E-15	72.6273	8-1	0.25635

Table: Element Forces - Frames, Part 2 of 2

Frame	Station	OutputCase	StepType	M2	M3	FrameElem	ElemStation
	m			KN-m	KN-m		m
8	0.5127	SLU 1-NL	Min	1.840E-14	165.9223	8-1	0.5127
8	0.	SLU 2-NL	Max	2.084E-16	23.1039	8-1	0.
8	0.25635	SLU 2-NL	Max	1.214E-14	122.4931	8-1	0.25635
8	0.5127	SLU 2-NL	Max	2.431E-14	223.7312	8-1	0.5127
8	0.	SLU 2-NL	Min	2.084E-16	23.1039	8-1	0.
8	0.25635	SLU 2-NL	Min	1.214E-14	122.4931	8-1	0.25635
8	0.5127	SLU 2-NL	Min	2.431E-14	223.7312	8-1	0.5127
8	0.	SLU 3-NL	Max	-6.962E-15	-59.173	8-1	0.
8	0.25635	SLU 3-NL	Max	-7.115E-16	-7.1172	8-1	0.25635
8	0.5127	SLU 3-NL	Max	5.713E-15	46.3621	8-1	0.5127
8	0.	SLU 3-NL	Min	-6.962E-15	-59.173	8-1	0.
8	0.25635	SLU 3-NL	Min	-7.115E-16	-7.1172	8-1	0.25635
8	0.5127	SLU 3-NL	Min	5.713E-15	46.3621	8-1	0.5127
8	0.	SLU 4-NL	Max	-5.727E-15	-38.1761	8-1	0.
8	0.25635	SLU 4-NL	Max	5.386E-15	54.3733	8-1	0.25635
8	0.5127	SLU 4-NL	Max	1.673E-14	148.7723	8-1	0.5127
8	0.	SLU 4-NL	Min	-5.727E-15	-38.1761	8-1	0.
8	0.25635	SLU 4-NL	Min	5.386E-15	54.3733	8-1	0.25635
8	0.5127	SLU 4-NL	Min	1.673E-14	148.7723	8-1	0.5127
8	0.	SLU 5-NL	Max	-9.458E-15	-84.2148	8-1	0.
8	0.25635	SLU 5-NL	Max	-3.139E-15	-31.5844	8-1	0.25635
8	0.5127	SLU 5-NL	Max	3.355E-15	22.4697	8-1	0.5127
8	0.	SLU 5-NL	Min	-9.458E-15	-84.2148	8-1	0.
8	0.25635	SLU 5-NL	Min	-3.139E-15	-31.5844	8-1	0.25635
8	0.5127	SLU 5-NL	Min	3.355E-15	22.4697	8-1	0.5127
8	0.	SLU 6-NL	Max	-1.599E-15	3.2178	8-1	0.
8	0.25635	SLU 6-NL	Max	9.388E-15	94.7173	8-1	0.25635
8	0.5127	SLU 6-NL	Max	2.060E-14	188.0658	8-1	0.5127
8	0.	SLU 6-NL	Min	-1.599E-15	3.2178	8-1	0.
8	0.25635	SLU 6-NL	Min	9.388E-15	94.7173	8-1	0.25635
8	0.5127	SLU 6-NL	Min	2.060E-14	188.0658	8-1	0.5127
8	0.	SLU 7-NL	Max	-4.921E-15	-38.7259	8-1	0.
8	0.25635	SLU 7-NL	Max	1.256E-15	12.7218	8-1	0.25635
8	0.5127	SLU 7-NL	Max	7.608E-15	65.5926	8-1	0.5127
8	0.	SLU 7-NL	Min	-4.921E-15	-38.7259	8-1	0.
8	0.25635	SLU 7-NL	Min	1.256E-15	12.7218	8-1	0.25635
8	0.5127	SLU 7-NL	Min	7.608E-15	65.5926	8-1	0.5127
8	0.	SLE-C-NL	Max	-2.922E-15	-14.88	8-1	0.
8	0.25635	SLE-C-NL	Max	5.358E-15	54.0724	8-1	0.25635
8	0.5127	SLE-C-NL	Max	1.381E-14	124.4475	8-1	0.5127
8	0.	SLE-C-NL	Min	-2.922E-15	-14.88	8-1	0.
8	0.25635	SLE-C-NL	Min	5.358E-15	54.0724	8-1	0.25635
8	0.5127	SLE-C-NL	Min	1.381E-14	124.4475	8-1	0.5127
8	0.	SLE-F-1-NL	Max	-2.046E-15	-6.0997	8-1	0.
8	0.25635	SLE-F-1-NL	Max	6.208E-15	62.6385	8-1	0.25635
8	0.5127	SLE-F-1-NL	Max	1.464E-14	132.7992	8-1	0.5127
8	0.	SLE-F-1-NL	Min	-2.046E-15	-6.0997	8-1	0.
8	0.25635	SLE-F-1-NL	Min	6.208E-15	62.6385	8-1	0.25635
8	0.5127	SLE-F-1-NL	Min	1.464E-14	132.7992	8-1	0.5127
8	0.	SLE-F-2-NL	Max	-4.402E-15	-31.908	8-1	0.
8	0.25635	SLE-F-2-NL	Max	2.680E-15	27.0758	8-1	0.25635
8	0.5127	SLE-F-2-NL	Max	9.937E-15	87.4826	8-1	0.5127
8	0.	SLE-F-2-NL	Min	-4.402E-15	-31.908	8-1	0.
8	0.25635	SLE-F-2-NL	Min	2.680E-15	27.0758	8-1	0.25635

Table: Element Forces - Frames, Part 2 of 2

Frame	Station	OutputCase	StepType	M2	M3	FrameElem	ElemStation
	m			KN-m	KN-m		m
8	0.5127	SLE-F-2-NL	Min	9.937E-15	87.4826	8-1	0.5127
8	0.	SLE-F-3-NL	Max	-3.038E-15	-18.2671	8-1	0.
8	0.25635	SLE-F-3-NL	Max	3.981E-15	40.1891	8-1	0.25635
8	0.5127	SLE-F-3-NL	Max	1.117E-14	100.0682	8-1	0.5127
8	0.	SLE-F-3-NL	Min	-3.038E-15	-18.2671	8-1	0.
8	0.25635	SLE-F-3-NL	Min	3.981E-15	40.1891	8-1	0.25635
8	0.5127	SLE-F-3-NL	Min	1.117E-14	100.0682	8-1	0.5127
8	0.	SLE-QP-NL	Max	-2.971E-15	-17.2612	8-1	0.
8	0.25635	SLE-QP-NL	Max	4.234E-15	42.7418	8-1	0.25635
8	0.5127	SLE-QP-NL	Max	1.161E-14	104.1678	8-1	0.5127
8	0.	SLE-QP-NL	Min	-2.971E-15	-17.2612	8-1	0.
8	0.25635	SLE-QP-NL	Min	4.234E-15	42.7418	8-1	0.25635
8	0.5127	SLE-QP-NL	Min	1.161E-14	104.1678	8-1	0.5127
8	0.	SLV1-NL	Max	-8.140E-15	-70.1682	8-1	0.
8	0.25635	SLV1-NL	Max	-1.389E-15	-13.95	8-1	0.25635
8	0.5127	SLV1-NL	Max	5.523E-15	43.5837	8-1	0.5127
8	0.	SLV1-NL	Min	-8.140E-15	-70.1682	8-1	0.
8	0.25635	SLV1-NL	Min	-1.389E-15	-13.95	8-1	0.25635
8	0.5127	SLV1-NL	Min	5.523E-15	43.5837	8-1	0.5127
8	0.	SLV2-NL	Max	-2.081E-15	-8.2805	8-1	0.
8	0.25635	SLV2-NL	Max	5.126E-15	51.7325	8-1	0.25635
8	0.5127	SLV2-NL	Max	1.252E-14	113.3161	8-1	0.5127
8	0.	SLV2-NL	Min	-2.081E-15	-8.2805	8-1	0.
8	0.25635	SLV2-NL	Min	5.126E-15	51.7325	8-1	0.25635
8	0.5127	SLV2-NL	Min	1.252E-14	113.3161	8-1	0.5127
8	0.	SLV3-NL	Max	-8.053E-15	-69.3024	8-1	0.
8	0.25635	SLV3-NL	Max	-1.304E-15	-13.0968	8-1	0.25635
8	0.5127	SLV3-NL	Max	5.601E-15	44.3845	8-1	0.5127
8	0.	SLV3-NL	Min	-8.053E-15	-69.3024	8-1	0.
8	0.25635	SLV3-NL	Min	-1.304E-15	-13.0968	8-1	0.25635
8	0.5127	SLV3-NL	Min	5.601E-15	44.3845	8-1	0.5127
8	0.	SLV4-NL	Max	-1.998E-15	-7.4507	8-1	0.
8	0.25635	SLV4-NL	Max	5.207E-15	52.5521	8-1	0.25635
8	0.5127	SLV4-NL	Max	1.260E-14	114.0855	8-1	0.5127
8	0.	SLV4-NL	Min	-1.998E-15	-7.4507	8-1	0.
8	0.25635	SLV4-NL	Min	5.207E-15	52.5521	8-1	0.25635
8	0.5127	SLV4-NL	Min	1.260E-14	114.0855	8-1	0.5127
8	0.	SLV5-NL	Max	-4.360E-15	-31.1806	8-1	0.
8	0.25635	SLV5-NL	Max	2.895E-15	29.2378	8-1	0.25635
8	0.5127	SLV5-NL	Max	1.033E-14	91.1074	8-1	0.5127
8	0.	SLV5-NL	Min	-4.360E-15	-31.1806	8-1	0.
8	0.25635	SLV5-NL	Min	2.895E-15	29.2378	8-1	0.25635
8	0.5127	SLV5-NL	Min	1.033E-14	91.1074	8-1	0.5127
8	0.	SLV6-NL	Max	-2.731E-15	-14.4918	8-1	0.
8	0.25635	SLV6-NL	Max	4.671E-15	47.144	8-1	0.25635
8	0.5127	SLV6-NL	Max	1.226E-14	110.3075	8-1	0.5127
8	0.	SLV6-NL	Min	-2.731E-15	-14.4918	8-1	0.
8	0.25635	SLV6-NL	Min	4.671E-15	47.144	8-1	0.25635
8	0.5127	SLV6-NL	Min	1.226E-14	110.3075	8-1	0.5127
8	0.	SLV7-NL	Max	-4.072E-15	-28.2875	8-1	0.
8	0.25635	SLV7-NL	Max	3.178E-15	32.0893	8-1	0.25635
8	0.5127	SLV7-NL	Max	1.059E-14	93.7842	8-1	0.5127
8	0.	SLV7-NL	Min	-4.072E-15	-28.2875	8-1	0.
8	0.25635	SLV7-NL	Min	3.178E-15	32.0893	8-1	0.25635

Table: Element Forces - Frames, Part 2 of 2

Frame	Station	OutputCase	StepType	M2	M3	FrameElem	ElemStation
	m			KN-m	KN-m		m
8	0.5127	SLV7-NL	Min	1.059E-14	93.7842	8-1	0.5127
8	0.	SLV8-NL	Max	-2.456E-15	-11.7343	8-1	0.
8	0.25635	SLV8-NL	Max	4.941E-15	49.8671	8-1	0.25635
8	0.5127	SLV8-NL	Max	1.251E-14	112.8631	8-1	0.5127
8	0.	SLV8-NL	Min	-2.456E-15	-11.7343	8-1	0.
8	0.25635	SLV8-NL	Min	4.941E-15	49.8671	8-1	0.25635
8	0.5127	SLV8-NL	Min	1.251E-14	112.8631	8-1	0.5127
8	0.	SLV9-NL	Max	-6.169E-15	-49.9433	8-1	0.
8	0.25635	SLV9-NL	Max	7.870E-16	7.9867	8-1	0.25635
8	0.5127	SLV9-NL	Max	7.909E-15	67.2667	8-1	0.5127
8	0.	SLV9-NL	Min	-6.169E-15	-49.9433	8-1	0.
8	0.25635	SLV9-NL	Min	7.870E-16	7.9867	8-1	0.25635
8	0.5127	SLV9-NL	Min	7.909E-15	67.2667	8-1	0.5127
8	0.	SLV10-NL	Max	-1.131E-15	1.6359	8-1	0.
8	0.25635	SLV10-NL	Max	6.273E-15	63.291	8-1	0.25635
8	0.5127	SLV10-NL	Max	1.385E-14	126.402	8-1	0.5127
8	0.	SLV10-NL	Min	-1.131E-15	1.6359	8-1	0.
8	0.25635	SLV10-NL	Min	6.273E-15	63.291	8-1	0.25635
8	0.5127	SLV10-NL	Min	1.385E-14	126.402	8-1	0.5127
8	0.	SLV11-NL	Max	-6.005E-15	-47.8392	8-1	0.
8	0.25635	SLV11-NL	Max	1.205E-15	12.2029	8-1	0.25635
8	0.5127	SLV11-NL	Max	8.585E-15	73.6348	8-1	0.5127
8	0.	SLV11-NL	Min	-6.005E-15	-47.8392	8-1	0.
8	0.25635	SLV11-NL	Min	1.205E-15	12.2029	8-1	0.25635
8	0.5127	SLV11-NL	Min	8.585E-15	73.6348	8-1	0.5127
8	0.	SLV12-NL	Max	-9.853E-16	3.5524	8-1	0.
8	0.25635	SLV12-NL	Max	6.673E-15	67.327	8-1	0.25635
8	0.5127	SLV12-NL	Max	1.451E-14	132.5975	8-1	0.5127
8	0.	SLV12-NL	Min	-9.853E-16	3.5524	8-1	0.
8	0.25635	SLV12-NL	Min	6.673E-15	67.327	8-1	0.25635
8	0.5127	SLV12-NL	Min	1.451E-14	132.5975	8-1	0.5127
8	0.	SLV13-NL	Max	-3.887E-15	-26.9863	8-1	0.
8	0.25635	SLV13-NL	Max	3.042E-15	30.7234	8-1	0.25635
8	0.5127	SLV13-NL	Max	1.014E-14	89.7734	8-1	0.5127
8	0.	SLV13-NL	Min	-3.887E-15	-26.9863	8-1	0.
8	0.25635	SLV13-NL	Min	3.042E-15	30.7234	8-1	0.25635
8	0.5127	SLV13-NL	Min	1.014E-14	89.7734	8-1	0.5127
8	0.	SLV14-NL	Max	-2.560E-15	-13.3595	8-1	0.
8	0.25635	SLV14-NL	Max	4.508E-15	45.5039	8-1	0.25635
8	0.5127	SLV14-NL	Max	1.174E-14	105.7395	8-1	0.5127
8	0.	SLV14-NL	Min	-2.560E-15	-13.3595	8-1	0.
8	0.25635	SLV14-NL	Min	4.508E-15	45.5039	8-1	0.25635
8	0.5127	SLV14-NL	Min	1.174E-14	105.7395	8-1	0.5127
8	0.	SLV15-NL	Max	-3.381E-15	-20.4051	8-1	0.
8	0.25635	SLV15-NL	Max	4.386E-15	44.2729	8-1	0.25635
8	0.5127	SLV15-NL	Max	1.233E-14	110.4245	8-1	0.5127
8	0.	SLV15-NL	Min	-3.381E-15	-20.4051	8-1	0.
8	0.25635	SLV15-NL	Min	4.386E-15	44.2729	8-1	0.25635
8	0.5127	SLV15-NL	Min	1.233E-14	110.4245	8-1	0.5127
8	0.	SLV16-NL	Max	-2.109E-15	-7.3416	8-1	0.
8	0.25635	SLV16-NL	Max	5.797E-15	58.4983	8-1	0.25635
8	0.5127	SLV16-NL	Max	1.389E-14	125.8436	8-1	0.5127
8	0.	SLV16-NL	Min	-2.109E-15	-7.3416	8-1	0.
8	0.25635	SLV16-NL	Min	5.797E-15	58.4983	8-1	0.25635

Table: Element Forces - Frames, Part 2 of 2

Frame	Station	OutputCase	StepType	M2	M3	FrameElem	ElemStation
	m			KN-m	KN-m		m
8	0.5127	SLV16-NL	Min	1.389E-14	125.8436	8-1	0.5127
9	0.	SLU 1-NL	Max	1.490E-14	165.2903	9-1	0.
9	0.25635	SLU 1-NL	Max	2.348E-14	236.8124	9-1	0.25635
9	0.5127	SLU 1-NL	Max	3.230E-14	310.2093	9-1	0.5127
9	0.	SLU 1-NL	Min	1.490E-14	165.2903	9-1	0.
9	0.25635	SLU 1-NL	Min	2.348E-14	236.8124	9-1	0.25635
9	0.5127	SLU 1-NL	Min	3.230E-14	310.2093	9-1	0.5127
9	0.	SLU 2-NL	Max	2.050E-14	223.1008	9-1	0.
9	0.25635	SLU 2-NL	Max	2.983E-14	300.7953	9-1	0.25635
9	0.5127	SLU 2-NL	Max	3.939E-14	380.3646	9-1	0.5127
9	0.	SLU 2-NL	Min	2.050E-14	223.1008	9-1	0.
9	0.25635	SLU 2-NL	Min	2.983E-14	300.7953	9-1	0.25635
9	0.5127	SLU 2-NL	Min	3.939E-14	380.3646	9-1	0.5127
9	0.	SLU 3-NL	Max	3.714E-15	46.0707	9-1	0.
9	0.25635	SLU 3-NL	Max	8.604E-15	86.7982	9-1	0.25635
9	0.5127	SLU 3-NL	Max	1.367E-14	128.9695	9-1	0.5127
9	0.	SLU 3-NL	Min	3.714E-15	46.0707	9-1	0.
9	0.25635	SLU 3-NL	Min	8.604E-15	86.7982	9-1	0.25635
9	0.5127	SLU 3-NL	Min	1.367E-14	128.9695	9-1	0.5127
9	0.	SLU 4-NL	Max	1.313E-14	147.932	9-1	0.
9	0.25635	SLU 4-NL	Max	2.197E-14	221.5261	9-1	0.25635
9	0.5127	SLU 4-NL	Max	3.103E-14	296.9953	9-1	0.5127
9	0.	SLU 4-NL	Min	1.313E-14	147.932	9-1	0.
9	0.25635	SLU 4-NL	Min	2.197E-14	221.5261	9-1	0.25635
9	0.5127	SLU 4-NL	Min	3.103E-14	296.9953	9-1	0.5127
9	0.	SLU 5-NL	Max	1.293E-15	22.0274	9-1	0.
9	0.25635	SLU 5-NL	Max	6.393E-15	64.5042	9-1	0.25635
9	0.5127	SLU 5-NL	Max	1.167E-14	108.4251	9-1	0.5127
9	0.	SLU 5-NL	Min	1.293E-15	22.0274	9-1	0.
9	0.25635	SLU 5-NL	Min	6.393E-15	64.5042	9-1	0.25635
9	0.5127	SLU 5-NL	Min	1.167E-14	108.4251	9-1	0.5127
9	0.	SLU 6-NL	Max	1.714E-14	187.6576	9-1	0.
9	0.25635	SLU 6-NL	Max	2.559E-14	258.0085	9-1	0.25635
9	0.5127	SLU 6-NL	Max	3.426E-14	330.2339	9-1	0.5127
9	0.	SLU 6-NL	Min	1.714E-14	187.6576	9-1	0.
9	0.25635	SLU 6-NL	Min	2.559E-14	258.0085	9-1	0.25635
9	0.5127	SLU 6-NL	Min	3.426E-14	330.2339	9-1	0.5127
9	0.	SLU 7-NL	Max	5.676E-15	65.4698	9-1	0.
9	0.25635	SLU 7-NL	Max	1.035E-14	104.4236	9-1	0.25635
9	0.5127	SLU 7-NL	Max	1.521E-14	144.8209	9-1	0.5127
9	0.	SLU 7-NL	Min	5.676E-15	65.4698	9-1	0.
9	0.25635	SLU 7-NL	Min	1.035E-14	104.4236	9-1	0.25635
9	0.5127	SLU 7-NL	Min	1.521E-14	144.8209	9-1	0.5127
9	0.	SLE-C-NL	Max	1.118E-14	124.0853	9-1	0.
9	0.25635	SLE-C-NL	Max	1.765E-14	178.0102	9-1	0.25635
9	0.5127	SLE-C-NL	Max	2.430E-14	233.378	9-1	0.5127
9	0.	SLE-C-NL	Min	1.118E-14	124.0853	9-1	0.
9	0.25635	SLE-C-NL	Min	1.765E-14	178.0102	9-1	0.25635
9	0.5127	SLE-C-NL	Min	2.430E-14	233.378	9-1	0.5127
9	0.	SLE-F-1-NL	Max	1.201E-14	132.4523	9-1	0.
9	0.25635	SLE-F-1-NL	Max	1.846E-14	186.197	9-1	0.25635
9	0.5127	SLE-F-1-NL	Max	2.509E-14	241.3845	9-1	0.5127
9	0.	SLE-F-1-NL	Min	1.201E-14	132.4523	9-1	0.
9	0.25635	SLE-F-1-NL	Min	1.846E-14	186.197	9-1	0.25635

Table: Element Forces - Frames, Part 2 of 2

Frame	Station	OutputCase	StepType	M2	M3	FrameElem	ElemStation
	m			KN-m	KN-m		m
9	0.5127	SLE-F-1-NL	Min	2.509E-14	241.3845	9-1	0.5127
9	0.	SLE-F-2-NL	Max	7.672E-15	87.1765	9-1	0.
9	0.25635	SLE-F-2-NL	Max	1.325E-14	133.6308	9-1	0.25635
9	0.5127	SLE-F-2-NL	Max	1.900E-14	181.5286	9-1	0.5127
9	0.	SLE-F-2-NL	Min	7.672E-15	87.1765	9-1	0.
9	0.25635	SLE-F-2-NL	Min	1.325E-14	133.6308	9-1	0.25635
9	0.5127	SLE-F-2-NL	Min	1.900E-14	181.5286	9-1	0.5127
9	0.	SLE-F-3-NL	Max	8.947E-15	99.7938	9-1	0.
9	0.25635	SLE-F-3-NL	Max	1.439E-14	145.1533	9-1	0.25635
9	0.5127	SLE-F-3-NL	Max	2.002E-14	191.9562	9-1	0.5127
9	0.	SLE-F-3-NL	Min	8.947E-15	99.7938	9-1	0.
9	0.25635	SLE-F-3-NL	Min	1.439E-14	145.1533	9-1	0.25635
9	0.5127	SLE-F-3-NL	Min	2.002E-14	191.9562	9-1	0.5127
9	0.	SLE-QP-NL	Max	9.320E-15	103.8775	9-1	0.
9	0.25635	SLE-QP-NL	Max	1.495E-14	150.7811	9-1	0.25635
9	0.5127	SLE-QP-NL	Max	2.076E-14	199.128	9-1	0.5127
9	0.	SLE-QP-NL	Min	9.320E-15	103.8775	9-1	0.
9	0.25635	SLE-QP-NL	Min	1.495E-14	150.7811	9-1	0.25635
9	0.5127	SLE-QP-NL	Min	2.076E-14	199.128	9-1	0.5127
9	0.	SLV1-NL	Max	3.335E-15	43.1335	9-1	0.
9	0.25635	SLV1-NL	Max	8.731E-15	88.0682	9-1	0.25635
9	0.5127	SLV1-NL	Max	1.430E-14	134.3826	9-1	0.5127
9	0.	SLV1-NL	Min	3.335E-15	43.1335	9-1	0.
9	0.25635	SLV1-NL	Min	8.731E-15	88.0682	9-1	0.25635
9	0.5127	SLV1-NL	Min	1.430E-14	134.3826	9-1	0.5127
9	0.	SLV2-NL	Max	1.026E-14	113.166	9-1	0.
9	0.25635	SLV2-NL	Max	1.578E-14	159.1595	9-1	0.25635
9	0.5127	SLV2-NL	Max	2.149E-14	206.701	9-1	0.5127
9	0.	SLV2-NL	Min	1.026E-14	113.166	9-1	0.
9	0.25635	SLV2-NL	Min	1.578E-14	159.1595	9-1	0.25635
9	0.5127	SLV2-NL	Min	2.149E-14	206.701	9-1	0.5127
9	0.	SLV3-NL	Max	3.415E-15	43.9381	9-1	0.
9	0.25635	SLV3-NL	Max	8.810E-15	88.8673	9-1	0.25635
9	0.5127	SLV3-NL	Max	1.437E-14	135.1355	9-1	0.5127
9	0.	SLV3-NL	Min	3.415E-15	43.9381	9-1	0.
9	0.25635	SLV3-NL	Min	8.810E-15	88.8673	9-1	0.25635
9	0.5127	SLV3-NL	Min	1.437E-14	135.1355	9-1	0.5127
9	0.	SLV4-NL	Max	1.034E-14	113.9375	9-1	0.
9	0.25635	SLV4-NL	Max	1.586E-14	159.9292	9-1	0.25635
9	0.5127	SLV4-NL	Max	2.157E-14	207.4283	9-1	0.5127
9	0.	SLV4-NL	Min	1.034E-14	113.9375	9-1	0.
9	0.25635	SLV4-NL	Min	1.586E-14	159.9292	9-1	0.25635
9	0.5127	SLV4-NL	Min	2.157E-14	207.4283	9-1	0.5127
9	0.	SLV5-NL	Max	8.006E-15	90.7601	9-1	0.
9	0.25635	SLV5-NL	Max	1.371E-14	138.2324	9-1	0.25635
9	0.5127	SLV5-NL	Max	1.959E-14	187.1903	9-1	0.5127
9	0.	SLV5-NL	Min	8.006E-15	90.7601	9-1	0.
9	0.25635	SLV5-NL	Min	1.371E-14	138.2324	9-1	0.25635
9	0.5127	SLV5-NL	Min	1.959E-14	187.1903	9-1	0.5127
9	0.	SLV6-NL	Max	9.908E-15	110.0361	9-1	0.
9	0.25635	SLV6-NL	Max	1.567E-14	157.9817	9-1	0.25635
9	0.5127	SLV6-NL	Max	2.161E-14	207.4634	9-1	0.5127
9	0.	SLV6-NL	Min	9.908E-15	110.0361	9-1	0.
9	0.25635	SLV6-NL	Min	1.567E-14	157.9817	9-1	0.25635

Table: Element Forces - Frames, Part 2 of 2

Frame	Station	OutputCase	StepType	M2	M3	FrameElem	ElemStation
	m			KN-m	KN-m		m
9	0.5127	SLV6-NL	Min	2.161E-14	207.4634	9-1	0.5127
9	0.	SLV7-NL	Max	8.274E-15	93.4479	9-1	0.
9	0.25635	SLV7-NL	Max	1.397E-14	140.9019	9-1	0.25635
9	0.5127	SLV7-NL	Max	1.984E-14	189.7063	9-1	0.5127
9	0.	SLV7-NL	Min	8.274E-15	93.4479	9-1	0.
9	0.25635	SLV7-NL	Min	1.397E-14	140.9019	9-1	0.25635
9	0.5127	SLV7-NL	Min	1.984E-14	189.7063	9-1	0.5127
9	0.	SLV8-NL	Max	1.016E-14	112.6008	9-1	0.
9	0.25635	SLV8-NL	Max	1.592E-14	160.5402	9-1	0.25635
9	0.5127	SLV8-NL	Max	2.185E-14	209.8805	9-1	0.5127
9	0.	SLV8-NL	Min	1.016E-14	112.6008	9-1	0.
9	0.25635	SLV8-NL	Min	1.592E-14	160.5402	9-1	0.25635
9	0.5127	SLV8-NL	Min	2.185E-14	209.8805	9-1	0.5127
9	0.	SLV9-NL	Max	5.677E-15	66.9375	9-1	0.
9	0.25635	SLV9-NL	Max	1.118E-14	112.7887	9-1	0.25635
9	0.5127	SLV9-NL	Max	1.686E-14	160.0369	9-1	0.5127
9	0.	SLV9-NL	Min	5.677E-15	66.9375	9-1	0.
9	0.25635	SLV9-NL	Min	1.118E-14	112.7887	9-1	0.25635
9	0.5127	SLV9-NL	Min	1.686E-14	160.0369	9-1	0.5127
9	0.	SLV10-NL	Max	1.151E-14	126.1359	9-1	0.
9	0.25635	SLV10-NL	Max	1.724E-14	173.8163	9-1	0.25635
9	0.5127	SLV10-NL	Max	2.314E-14	222.9457	9-1	0.5127
9	0.	SLV10-NL	Min	1.151E-14	126.1359	9-1	0.
9	0.25635	SLV10-NL	Min	1.724E-14	173.8163	9-1	0.25635
9	0.5127	SLV10-NL	Min	2.314E-14	222.9457	9-1	0.5127
9	0.	SLV11-NL	Max	6.273E-15	73.2893	9-1	0.
9	0.25635	SLV11-NL	Max	1.198E-14	120.7847	9-1	0.25635
9	0.5127	SLV11-NL	Max	1.785E-14	169.7176	9-1	0.5127
9	0.	SLV11-NL	Min	6.273E-15	73.2893	9-1	0.
9	0.25635	SLV11-NL	Min	1.198E-14	120.7847	9-1	0.25635
9	0.5127	SLV11-NL	Min	1.785E-14	169.7176	9-1	0.5127
9	0.	SLV12-NL	Max	1.209E-14	132.3154	9-1	0.
9	0.25635	SLV12-NL	Max	1.801E-14	181.6547	9-1	0.25635
9	0.5127	SLV12-NL	Max	2.412E-14	232.4836	9-1	0.5127
9	0.	SLV12-NL	Min	1.209E-14	132.3154	9-1	0.
9	0.25635	SLV12-NL	Min	1.801E-14	181.6547	9-1	0.25635
9	0.5127	SLV12-NL	Min	2.412E-14	232.4836	9-1	0.5127
9	0.	SLV13-NL	Max	7.927E-15	89.492	9-1	0.
9	0.25635	SLV13-NL	Max	1.336E-14	134.7372	9-1	0.25635
9	0.5127	SLV13-NL	Max	1.896E-14	181.3504	9-1	0.5127
9	0.	SLV13-NL	Min	7.927E-15	89.492	9-1	0.
9	0.25635	SLV13-NL	Min	1.336E-14	134.7372	9-1	0.25635
9	0.5127	SLV13-NL	Min	1.896E-14	181.3504	9-1	0.5127
9	0.	SLV14-NL	Max	9.498E-15	105.4652	9-1	0.
9	0.25635	SLV14-NL	Max	1.501E-14	151.3691	9-1	0.25635
9	0.5127	SLV14-NL	Max	2.069E-14	198.6567	9-1	0.5127
9	0.	SLV14-NL	Min	9.498E-15	105.4652	9-1	0.
9	0.25635	SLV14-NL	Min	1.501E-14	151.3691	9-1	0.25635
9	0.5127	SLV14-NL	Min	2.069E-14	198.6567	9-1	0.5127
9	0.	SLV15-NL	Max	9.857E-15	110.0891	9-1	0.
9	0.25635	SLV15-NL	Max	1.594E-14	160.7626	9-1	0.25635
9	0.5127	SLV15-NL	Max	2.221E-14	212.939	9-1	0.5127
9	0.	SLV15-NL	Min	9.857E-15	110.0891	9-1	0.
9	0.25635	SLV15-NL	Min	1.594E-14	160.7626	9-1	0.25635

Table: Element Forces - Frames, Part 2 of 2

Frame	Station	OutputCase	StepType	M2	M3	FrameElem	ElemStation
	m			KN-m	KN-m		m
9	0.5127	SLV15-NL	Min	2.221E-14	212.939	9-1	0.5127
9	0.	SLV16-NL	Max	1.137E-14	125.5159	9-1	0.
9	0.25635	SLV16-NL	Max	1.754E-14	176.8738	9-1	0.25635
9	0.5127	SLV16-NL	Max	2.389E-14	229.7503	9-1	0.5127
9	0.	SLV16-NL	Min	1.137E-14	125.5159	9-1	0.
9	0.25635	SLV16-NL	Min	1.754E-14	176.8738	9-1	0.25635
9	0.5127	SLV16-NL	Min	2.389E-14	229.7503	9-1	0.5127
10	0.	SLU 1-NL	Max	2.965E-14	309.7297	10-1	0.
10	0.25635	SLU 1-NL	Max	3.579E-14	360.8641	10-1	0.25635
10	0.5127	SLU 1-NL	Max	4.216E-14	413.8926	10-1	0.5127
10	0.	SLU 1-NL	Min	2.965E-14	309.7297	10-1	0.
10	0.25635	SLU 1-NL	Min	3.579E-14	360.8641	10-1	0.25635
10	0.5127	SLU 1-NL	Min	4.216E-14	413.8926	10-1	0.5127
10	0.	SLU 2-NL	Max	3.652E-14	379.8867	10-1	0.
10	0.25635	SLU 2-NL	Max	4.319E-14	435.4262	10-1	0.25635
10	0.5127	SLU 2-NL	Max	5.009E-14	492.86	10-1	0.5127
10	0.	SLU 2-NL	Min	3.652E-14	379.8867	10-1	0.
10	0.25635	SLU 2-NL	Min	4.319E-14	435.4262	10-1	0.25635
10	0.5127	SLU 2-NL	Min	5.009E-14	492.86	10-1	0.5127
10	0.	SLU 3-NL	Max	1.216E-14	128.7479	10-1	0.
10	0.25635	SLU 3-NL	Max	1.565E-14	157.8408	10-1	0.25635
10	0.5127	SLU 3-NL	Max	1.932E-14	188.3928	10-1	0.5127
10	0.	SLU 3-NL	Min	1.216E-14	128.7479	10-1	0.
10	0.25635	SLU 3-NL	Min	1.565E-14	157.8408	10-1	0.25635
10	0.5127	SLU 3-NL	Min	1.932E-14	188.3928	10-1	0.5127
10	0.	SLU 4-NL	Max	2.826E-14	296.2901	10-1	0.
10	0.25635	SLU 4-NL	Max	3.473E-14	350.1956	10-1	0.25635
10	0.5127	SLU 4-NL	Max	4.144E-14	405.9954	10-1	0.5127
10	0.	SLU 4-NL	Min	2.826E-14	296.2901	10-1	0.
10	0.25635	SLU 4-NL	Min	3.473E-14	350.1956	10-1	0.25635
10	0.5127	SLU 4-NL	Min	4.144E-14	405.9954	10-1	0.5127
10	0.	SLU 5-NL	Max	1.005E-14	108.0392	10-1	0.
10	0.25635	SLU 5-NL	Max	1.386E-14	139.7684	10-1	0.25635
10	0.5127	SLU 5-NL	Max	1.785E-14	172.957	10-1	0.5127
10	0.	SLU 5-NL	Min	1.005E-14	108.0392	10-1	0.
10	0.25635	SLU 5-NL	Min	1.386E-14	139.7684	10-1	0.25635
10	0.5127	SLU 5-NL	Min	1.785E-14	172.957	10-1	0.5127
10	0.	SLU 6-NL	Max	3.170E-14	329.9917	10-1	0.
10	0.25635	SLU 6-NL	Max	3.759E-14	378.9986	10-1	0.25635
10	0.5127	SLU 6-NL	Max	4.370E-14	429.8996	10-1	0.5127
10	0.	SLU 6-NL	Min	3.170E-14	329.9917	10-1	0.
10	0.25635	SLU 6-NL	Min	3.759E-14	378.9986	10-1	0.25635
10	0.5127	SLU 6-NL	Min	4.370E-14	429.8996	10-1	0.5127
10	0.	SLU 7-NL	Max	1.380E-14	144.7773	10-1	0.
10	0.25635	SLU 7-NL	Max	1.698E-14	171.2174	10-1	0.25635
10	0.5127	SLU 7-NL	Max	2.033E-14	199.1164	10-1	0.5127
10	0.	SLU 7-NL	Min	1.380E-14	144.7773	10-1	0.
10	0.25635	SLU 7-NL	Min	1.698E-14	171.2174	10-1	0.25635
10	0.5127	SLU 7-NL	Min	2.033E-14	199.1164	10-1	0.5127
10	0.	SLE-C-NL	Max	2.231E-14	233.1031	10-1	0.
10	0.25635	SLE-C-NL	Max	2.694E-14	271.6515	10-1	0.25635
10	0.5127	SLE-C-NL	Max	3.175E-14	311.658	10-1	0.5127
10	0.	SLE-C-NL	Min	2.231E-14	233.1031	10-1	0.
10	0.25635	SLE-C-NL	Min	2.694E-14	271.6515	10-1	0.25635

Table: Element Forces - Frames, Part 2 of 2

Frame	Station	OutputCase	StepType	M2	M3	FrameElem	ElemStation
	m			KN-m	KN-m		m
10	0.5127	SLE-C-NL	Min	3.175E-14	311.658	10-1	0.5127
10	0.	SLE-F-1-NL	Max	2.311E-14	241.1213	10-1	0.
10	0.25635	SLE-F-1-NL	Max	2.772E-14	279.5336	10-1	0.25635
10	0.5127	SLE-F-1-NL	Max	3.251E-14	319.4041	10-1	0.5127
10	0.	SLE-F-1-NL	Min	2.311E-14	241.1213	10-1	0.
10	0.25635	SLE-F-1-NL	Min	2.772E-14	279.5336	10-1	0.25635
10	0.5127	SLE-F-1-NL	Min	3.251E-14	319.4041	10-1	0.5127
10	0.	SLE-F-2-NL	Max	1.728E-14	181.2898	10-1	0.
10	0.25635	SLE-F-2-NL	Max	2.131E-14	214.8411	10-1	0.25635
10	0.5127	SLE-F-2-NL	Max	2.551E-14	249.8512	10-1	0.5127
10	0.	SLE-F-2-NL	Min	1.728E-14	181.2898	10-1	0.
10	0.25635	SLE-F-2-NL	Min	2.131E-14	214.8411	10-1	0.25635
10	0.5127	SLE-F-2-NL	Min	2.551E-14	249.8512	10-1	0.5127
10	0.	SLE-F-3-NL	Max	1.835E-14	191.7541	10-1	0.
10	0.25635	SLE-F-3-NL	Max	2.219E-14	223.7828	10-1	0.25635
10	0.5127	SLE-F-3-NL	Max	2.622E-14	257.2701	10-1	0.5127
10	0.	SLE-F-3-NL	Min	1.835E-14	191.7541	10-1	0.
10	0.25635	SLE-F-3-NL	Min	2.219E-14	223.7828	10-1	0.25635
10	0.5127	SLE-F-3-NL	Min	2.622E-14	257.2701	10-1	0.5127
10	0.	SLE-QP-NL	Max	1.903E-14	198.9076	10-1	0.
10	0.25635	SLE-QP-NL	Max	2.305E-14	232.4086	10-1	0.25635
10	0.5127	SLE-QP-NL	Max	2.725E-14	267.3685	10-1	0.5127
10	0.	SLE-QP-NL	Min	1.903E-14	198.9076	10-1	0.
10	0.25635	SLE-QP-NL	Min	2.305E-14	232.4086	10-1	0.25635
10	0.5127	SLE-QP-NL	Min	2.725E-14	267.3685	10-1	0.5127
10	0.	SLV1-NL	Max	1.259E-14	133.9923	10-1	0.
10	0.25635	SLV1-NL	Max	1.658E-14	167.1727	10-1	0.25635
10	0.5127	SLV1-NL	Max	2.074E-14	201.7832	10-1	0.5127
10	0.	SLV1-NL	Min	1.259E-14	133.9923	10-1	0.
10	0.25635	SLV1-NL	Min	1.658E-14	167.1727	10-1	0.25635
10	0.5127	SLV1-NL	Min	2.074E-14	201.7832	10-1	0.5127
10	0.	SLV2-NL	Max	1.983E-14	206.6338	10-1	0.
10	0.25635	SLV2-NL	Max	2.365E-14	238.4442	10-1	0.25635
10	0.5127	SLV2-NL	Max	2.765E-14	271.783	10-1	0.5127
10	0.	SLV2-NL	Min	1.983E-14	206.6338	10-1	0.
10	0.25635	SLV2-NL	Min	2.365E-14	238.4442	10-1	0.25635
10	0.5127	SLV2-NL	Min	2.765E-14	271.783	10-1	0.5127
10	0.	SLV3-NL	Max	1.267E-14	134.7485	10-1	0.
10	0.25635	SLV3-NL	Max	1.665E-14	167.9301	10-1	0.25635
10	0.5127	SLV3-NL	Max	2.081E-14	202.5009	10-1	0.5127
10	0.	SLV3-NL	Min	1.267E-14	134.7485	10-1	0.
10	0.25635	SLV3-NL	Min	1.665E-14	167.9301	10-1	0.25635
10	0.5127	SLV3-NL	Min	2.081E-14	202.5009	10-1	0.5127
10	0.	SLV4-NL	Max	1.990E-14	207.3625	10-1	0.
10	0.25635	SLV4-NL	Max	2.372E-14	239.1789	10-1	0.25635
10	0.5127	SLV4-NL	Max	2.772E-14	272.4827	10-1	0.5127
10	0.	SLV4-NL	Min	1.990E-14	207.3625	10-1	0.
10	0.25635	SLV4-NL	Min	2.372E-14	239.1789	10-1	0.25635
10	0.5127	SLV4-NL	Min	2.772E-14	272.4827	10-1	0.5127
10	0.	SLV5-NL	Max	1.782E-14	186.9143	10-1	0.
10	0.25635	SLV5-NL	Max	2.193E-14	221.0908	10-1	0.25635
10	0.5127	SLV5-NL	Max	2.621E-14	256.7796	10-1	0.5127
10	0.	SLV5-NL	Min	1.782E-14	186.9143	10-1	0.
10	0.25635	SLV5-NL	Min	2.193E-14	221.0908	10-1	0.25635

Table: Element Forces - Frames, Part 2 of 2

Frame	Station	OutputCase	StepType	M2	M3	FrameElem	ElemStation
	m			KN-m	KN-m		m
10	0.5127	SLV5-NL	Min	2.621E-14	256.7796	10-1	0.5127
10	0.	SLV6-NL	Max	1.985E-14	207.2693	10-1	0.
10	0.25635	SLV6-NL	Max	2.392E-14	241.2484	10-1	0.25635
10	0.5127	SLV6-NL	Max	2.819E-14	276.7694	10-1	0.5127
10	0.	SLV6-NL	Min	1.985E-14	207.2693	10-1	0.
10	0.25635	SLV6-NL	Min	2.392E-14	241.2484	10-1	0.25635
10	0.5127	SLV6-NL	Min	2.819E-14	276.7694	10-1	0.5127
10	0.	SLV7-NL	Max	1.807E-14	189.439	10-1	0.
10	0.25635	SLV7-NL	Max	2.218E-14	223.6197	10-1	0.25635
10	0.5127	SLV7-NL	Max	2.645E-14	259.176	10-1	0.5127
10	0.	SLV7-NL	Min	1.807E-14	189.439	10-1	0.
10	0.25635	SLV7-NL	Min	2.218E-14	223.6197	10-1	0.25635
10	0.5127	SLV7-NL	Min	2.645E-14	259.176	10-1	0.5127
10	0.	SLV8-NL	Max	2.009E-14	209.693	10-1	0.
10	0.25635	SLV8-NL	Max	2.417E-14	243.6921	10-1	0.25635
10	0.5127	SLV8-NL	Max	2.842E-14	279.0962	10-1	0.5127
10	0.	SLV8-NL	Min	2.009E-14	209.693	10-1	0.
10	0.25635	SLV8-NL	Min	2.417E-14	243.6921	10-1	0.25635
10	0.5127	SLV8-NL	Min	2.842E-14	279.0962	10-1	0.5127
10	0.	SLV9-NL	Max	1.515E-14	159.7747	10-1	0.
10	0.25635	SLV9-NL	Max	1.916E-14	193.1862	10-1	0.25635
10	0.5127	SLV9-NL	Max	2.334E-14	228.0285	10-1	0.5127
10	0.	SLV9-NL	Min	1.515E-14	159.7747	10-1	0.
10	0.25635	SLV9-NL	Min	1.916E-14	193.1862	10-1	0.25635
10	0.5127	SLV9-NL	Min	2.334E-14	228.0285	10-1	0.5127
10	0.	SLV10-NL	Max	2.139E-14	222.7547	10-1	0.
10	0.25635	SLV10-NL	Max	2.541E-14	256.1971	10-1	0.25635
10	0.5127	SLV10-NL	Max	2.960E-14	291.0851	10-1	0.5127
10	0.	SLV10-NL	Min	2.139E-14	222.7547	10-1	0.
10	0.25635	SLV10-NL	Min	2.541E-14	256.1971	10-1	0.25635
10	0.5127	SLV10-NL	Min	2.960E-14	291.0851	10-1	0.5127
10	0.	SLV11-NL	Max	1.608E-14	169.4428	10-1	0.
10	0.25635	SLV11-NL	Max	2.023E-14	204.0235	10-1	0.25635
10	0.5127	SLV11-NL	Max	2.456E-14	240.0759	10-1	0.5127
10	0.	SLV11-NL	Min	1.608E-14	169.4428	10-1	0.
10	0.25635	SLV11-NL	Min	2.023E-14	204.0235	10-1	0.25635
10	0.5127	SLV11-NL	Min	2.456E-14	240.0759	10-1	0.5127
10	0.	SLV12-NL	Max	2.231E-14	232.2805	10-1	0.
10	0.25635	SLV12-NL	Max	2.647E-14	266.9123	10-1	0.25635
10	0.5127	SLV12-NL	Max	3.081E-14	303.0307	10-1	0.5127
10	0.	SLV12-NL	Min	2.231E-14	232.2805	10-1	0.
10	0.25635	SLV12-NL	Min	2.647E-14	266.9123	10-1	0.25635
10	0.5127	SLV12-NL	Min	3.081E-14	303.0307	10-1	0.5127
10	0.	SLV13-NL	Max	1.729E-14	181.135	10-1	0.
10	0.25635	SLV13-NL	Max	2.118E-14	213.6097	10-1	0.25635
10	0.5127	SLV13-NL	Max	2.525E-14	247.4727	10-1	0.5127
10	0.	SLV13-NL	Min	1.729E-14	181.135	10-1	0.
10	0.25635	SLV13-NL	Min	2.118E-14	213.6097	10-1	0.25635
10	0.5127	SLV13-NL	Min	2.525E-14	247.4727	10-1	0.5127
10	0.	SLV14-NL	Max	1.900E-14	198.4501	10-1	0.
10	0.25635	SLV14-NL	Max	2.292E-14	231.1016	10-1	0.25635
10	0.5127	SLV14-NL	Max	2.701E-14	265.1458	10-1	0.5127
10	0.	SLV14-NL	Min	1.900E-14	198.4501	10-1	0.
10	0.25635	SLV14-NL	Min	2.292E-14	231.1016	10-1	0.25635

Table: Element Forces - Frames, Part 2 of 2

Frame	Station	OutputCase	StepType	M2	M3	FrameElem	ElemStation
	m			KN-m	KN-m		m
10	0.5127	SLV14-NL	Min	2.701E-14	265.1458	10-1	0.5127
10	0.	SLV15-NL	Max	2.033E-14	212.6827	10-1	0.
10	0.25635	SLV15-NL	Max	2.470E-14	249.0207	10-1	0.25635
10	0.5127	SLV15-NL	Max	2.925E-14	286.8834	10-1	0.5127
10	0.	SLV15-NL	Min	2.033E-14	212.6827	10-1	0.
10	0.25635	SLV15-NL	Min	2.470E-14	249.0207	10-1	0.25635
10	0.5127	SLV15-NL	Min	2.925E-14	286.8834	10-1	0.5127
10	0.	SLV16-NL	Max	2.200E-14	229.5034	10-1	0.
10	0.25635	SLV16-NL	Max	2.639E-14	266.0579	10-1	0.25635
10	0.5127	SLV16-NL	Max	3.096E-14	304.1415	10-1	0.5127
10	0.	SLV16-NL	Min	2.200E-14	229.5034	10-1	0.
10	0.25635	SLV16-NL	Min	2.639E-14	266.0579	10-1	0.25635
10	0.5127	SLV16-NL	Min	3.096E-14	304.1415	10-1	0.5127
11	0.	SLU 1-NL	Max	4.038E-14	413.5703	11-1	0.
11	0.25635	SLU 1-NL	Max	4.404E-14	443.9939	11-1	0.25635
11	0.5127	SLU 1-NL	Max	4.792E-14	476.3247	11-1	0.5127
11	0.	SLU 1-NL	Min	4.038E-14	413.5703	11-1	0.
11	0.25635	SLU 1-NL	Min	4.404E-14	443.9939	11-1	0.25635
11	0.5127	SLU 1-NL	Min	4.792E-14	476.3247	11-1	0.5127
11	0.	SLU 2-NL	Max	4.816E-14	492.5391	11-1	0.
11	0.25635	SLU 2-NL	Max	5.213E-14	525.604	11-1	0.25635
11	0.5127	SLU 2-NL	Max	5.633E-14	560.5765	11-1	0.5127
11	0.	SLU 2-NL	Min	4.816E-14	492.5391	11-1	0.
11	0.25635	SLU 2-NL	Min	5.213E-14	525.604	11-1	0.25635
11	0.5127	SLU 2-NL	Min	5.633E-14	560.5765	11-1	0.5127
11	0.	SLU 3-NL	Max	1.831E-14	188.2437	11-1	0.
11	0.25635	SLU 3-NL	Max	2.038E-14	205.488	11-1	0.25635
11	0.5127	SLU 3-NL	Max	2.263E-14	224.2016	11-1	0.5127
11	0.	SLU 3-NL	Min	1.831E-14	188.2437	11-1	0.
11	0.25635	SLU 3-NL	Min	2.038E-14	205.488	11-1	0.25635
11	0.5127	SLU 3-NL	Min	2.263E-14	224.2016	11-1	0.5127
11	0.	SLU 4-NL	Max	3.951E-14	405.4346	11-1	0.
11	0.25635	SLU 4-NL	Max	4.355E-14	439.0548	11-1	0.25635
11	0.5127	SLU 4-NL	Max	4.781E-14	474.5823	11-1	0.5127
11	0.	SLU 4-NL	Min	3.951E-14	405.4346	11-1	0.
11	0.25635	SLU 4-NL	Min	4.355E-14	439.0548	11-1	0.25635
11	0.5127	SLU 4-NL	Min	4.781E-14	474.5823	11-1	0.5127
11	0.	SLU 5-NL	Max	1.669E-14	172.6331	11-1	0.
11	0.25635	SLU 5-NL	Max	1.915E-14	193.1085	11-1	0.25635
11	0.5127	SLU 5-NL	Max	2.179E-14	215.0534	11-1	0.5127
11	0.	SLU 5-NL	Min	1.669E-14	172.6331	11-1	0.
11	0.25635	SLU 5-NL	Min	1.915E-14	193.1085	11-1	0.25635
11	0.5127	SLU 5-NL	Min	2.179E-14	215.0534	11-1	0.5127
11	0.	SLU 6-NL	Max	4.205E-14	429.8238	11-1	0.
11	0.25635	SLU 6-NL	Max	4.537E-14	457.4371	11-1	0.25635
11	0.5127	SLU 6-NL	Max	4.892E-14	486.9576	11-1	0.5127
11	0.	SLU 6-NL	Min	4.205E-14	429.8238	11-1	0.
11	0.25635	SLU 6-NL	Min	4.537E-14	457.4371	11-1	0.25635
11	0.5127	SLU 6-NL	Min	4.892E-14	486.9576	11-1	0.5127
11	0.	SLU 7-NL	Max	1.946E-14	199.1513	11-1	0.
11	0.25635	SLU 7-NL	Max	2.114E-14	213.1549	11-1	0.25635
11	0.5127	SLU 7-NL	Max	2.300E-14	228.6278	11-1	0.5127
11	0.	SLU 7-NL	Min	1.946E-14	199.1513	11-1	0.
11	0.25635	SLU 7-NL	Min	2.114E-14	213.1549	11-1	0.25635

Table: Element Forces - Frames, Part 2 of 2

Frame	Station	OutputCase	StepType	M2	M3	FrameElem	ElemStation
	m			KN-m	KN-m		m
11	0.5127	SLU 7-NL	Min	2.300E-14	228.6278	11-1	0.5127
11	0.	SLE-C-NL	Max	3.041E-14	311.4732	11-1	0.
11	0.25635	SLE-C-NL	Max	3.317E-14	334.4021	11-1	0.25635
11	0.5127	SLE-C-NL	Max	3.610E-14	358.7993	11-1	0.5127
11	0.	SLE-C-NL	Min	3.041E-14	311.4732	11-1	0.
11	0.25635	SLE-C-NL	Min	3.317E-14	334.4021	11-1	0.25635
11	0.5127	SLE-C-NL	Min	3.610E-14	358.7993	11-1	0.5127
11	0.	SLE-F-1-NL	Max	3.118E-14	319.2272	11-1	0.
11	0.25635	SLE-F-1-NL	Max	3.393E-14	342.0715	11-1	0.25635
11	0.5127	SLE-F-1-NL	Max	3.685E-14	366.3843	11-1	0.5127
11	0.	SLE-F-1-NL	Min	3.118E-14	319.2272	11-1	0.
11	0.25635	SLE-F-1-NL	Min	3.393E-14	342.0715	11-1	0.25635
11	0.5127	SLE-F-1-NL	Min	3.685E-14	366.3843	11-1	0.5127
11	0.	SLE-F-2-NL	Max	2.434E-14	249.6829	11-1	0.
11	0.25635	SLE-F-2-NL	Max	2.678E-14	270.0487	11-1	0.25635
11	0.5127	SLE-F-2-NL	Max	2.941E-14	291.8837	11-1	0.5127
11	0.	SLE-F-2-NL	Min	2.434E-14	249.6829	11-1	0.
11	0.25635	SLE-F-2-NL	Min	2.678E-14	270.0487	11-1	0.25635
11	0.5127	SLE-F-2-NL	Min	2.941E-14	291.8837	11-1	0.5127
11	0.	SLE-F-3-NL	Max	2.512E-14	257.1421	11-1	0.
11	0.25635	SLE-F-3-NL	Max	2.734E-14	275.6989	11-1	0.25635
11	0.5127	SLE-F-3-NL	Max	2.975E-14	295.7249	11-1	0.5127
11	0.	SLE-F-3-NL	Min	2.512E-14	257.1421	11-1	0.
11	0.25635	SLE-F-3-NL	Min	2.734E-14	275.6989	11-1	0.25635
11	0.5127	SLE-F-3-NL	Min	2.975E-14	295.7249	11-1	0.5127
11	0.	SLE-QP-NL	Max	2.609E-14	267.2203	11-1	0.
11	0.25635	SLE-QP-NL	Max	2.847E-14	287.108	11-1	0.25635
11	0.5127	SLE-QP-NL	Max	3.104E-14	308.4648	11-1	0.5127
11	0.	SLE-QP-NL	Min	2.609E-14	267.2203	11-1	0.
11	0.25635	SLE-QP-NL	Min	2.847E-14	287.108	11-1	0.25635
11	0.5127	SLE-QP-NL	Min	3.104E-14	308.4648	11-1	0.5127
11	0.	SLV1-NL	Max	1.954E-14	201.4588	11-1	0.
11	0.25635	SLV1-NL	Max	2.206E-14	222.4796	11-1	0.25635
11	0.5127	SLV1-NL	Max	2.477E-14	244.9673	11-1	0.5127
11	0.	SLV1-NL	Min	1.954E-14	201.4588	11-1	0.
11	0.25635	SLV1-NL	Min	2.206E-14	222.4796	11-1	0.25635
11	0.5127	SLV1-NL	Min	2.477E-14	244.9673	11-1	0.5127
11	0.	SLV2-NL	Max	2.659E-14	271.7979	11-1	0.
11	0.25635	SLV2-NL	Max	2.870E-14	289.3859	11-1	0.25635
11	0.5127	SLV2-NL	Max	3.100E-14	308.4864	11-1	0.5127
11	0.	SLV2-NL	Min	2.659E-14	271.7979	11-1	0.
11	0.25635	SLV2-NL	Min	2.870E-14	289.3859	11-1	0.25635
11	0.5127	SLV2-NL	Min	3.100E-14	308.4864	11-1	0.5127
11	0.	SLV3-NL	Max	1.961E-14	202.179	11-1	0.
11	0.25635	SLV3-NL	Max	2.214E-14	223.2076	11-1	0.25635
11	0.5127	SLV3-NL	Max	2.483E-14	245.6619	11-1	0.5127
11	0.	SLV3-NL	Min	1.961E-14	202.179	11-1	0.
11	0.25635	SLV3-NL	Min	2.214E-14	223.2076	11-1	0.25635
11	0.5127	SLV3-NL	Min	2.483E-14	245.6619	11-1	0.5127
11	0.	SLV4-NL	Max	2.666E-14	272.4983	11-1	0.
11	0.25635	SLV4-NL	Max	2.877E-14	290.0996	11-1	0.25635
11	0.5127	SLV4-NL	Max	3.106E-14	309.1721	11-1	0.5127
11	0.	SLV4-NL	Min	2.666E-14	272.4983	11-1	0.
11	0.25635	SLV4-NL	Min	2.877E-14	290.0996	11-1	0.25635

Table: Element Forces - Frames, Part 2 of 2

Frame	Station	OutputCase	StepType	M2	M3	FrameElem	ElemStation
	m			KN-m	KN-m		m
11	0.5127	SLV4-NL	Min	3.106E-14	309.1721	11-1	0.5127
11	0.	SLV5-NL	Max	2.502E-14	256.5782	11-1	0.
11	0.25635	SLV5-NL	Max	2.749E-14	277.1955	11-1	0.25635
11	0.5127	SLV5-NL	Max	3.015E-14	299.3439	11-1	0.5127
11	0.	SLV5-NL	Min	2.502E-14	256.5782	11-1	0.
11	0.25635	SLV5-NL	Min	2.749E-14	277.1955	11-1	0.25635
11	0.5127	SLV5-NL	Min	3.015E-14	299.3439	11-1	0.5127
11	0.	SLV6-NL	Max	2.702E-14	276.6542	11-1	0.
11	0.25635	SLV6-NL	Max	2.941E-14	296.4941	11-1	0.25635
11	0.5127	SLV6-NL	Max	3.198E-14	317.8787	11-1	0.5127
11	0.	SLV6-NL	Min	2.702E-14	276.6542	11-1	0.
11	0.25635	SLV6-NL	Min	2.941E-14	296.4941	11-1	0.25635
11	0.5127	SLV6-NL	Min	3.198E-14	317.8787	11-1	0.5127
11	0.	SLV7-NL	Max	2.525E-14	258.9808	11-1	0.
11	0.25635	SLV7-NL	Max	2.773E-14	279.6245	11-1	0.25635
11	0.5127	SLV7-NL	Max	3.038E-14	301.6615	11-1	0.5127
11	0.	SLV7-NL	Min	2.525E-14	258.9808	11-1	0.
11	0.25635	SLV7-NL	Min	2.773E-14	279.6245	11-1	0.25635
11	0.5127	SLV7-NL	Min	3.038E-14	301.6615	11-1	0.5127
11	0.	SLV8-NL	Max	2.725E-14	278.9851	11-1	0.
11	0.25635	SLV8-NL	Max	2.964E-14	298.8695	11-1	0.25635
11	0.5127	SLV8-NL	Max	3.220E-14	320.1608	11-1	0.5127
11	0.	SLV8-NL	Min	2.725E-14	278.9851	11-1	0.
11	0.25635	SLV8-NL	Min	2.964E-14	298.8695	11-1	0.25635
11	0.5127	SLV8-NL	Min	3.220E-14	320.1608	11-1	0.5127
11	0.	SLV9-NL	Max	2.216E-14	227.8367	11-1	0.
11	0.25635	SLV9-NL	Max	2.465E-14	248.5142	11-1	0.25635
11	0.5127	SLV9-NL	Max	2.731E-14	270.6424	11-1	0.5127
11	0.	SLV9-NL	Min	2.216E-14	227.8367	11-1	0.
11	0.25635	SLV9-NL	Min	2.465E-14	248.5142	11-1	0.25635
11	0.5127	SLV9-NL	Min	2.731E-14	270.6424	11-1	0.5127
11	0.	SLV10-NL	Max	2.846E-14	290.9705	11-1	0.
11	0.25635	SLV10-NL	Max	3.075E-14	310.0328	11-1	0.25635
11	0.5127	SLV10-NL	Max	3.321E-14	330.5413	11-1	0.5127
11	0.	SLV10-NL	Min	2.846E-14	290.9705	11-1	0.
11	0.25635	SLV10-NL	Min	3.075E-14	310.0328	11-1	0.25635
11	0.5127	SLV10-NL	Min	3.321E-14	330.5413	11-1	0.5127
11	0.	SLV11-NL	Max	2.334E-14	239.8756	11-1	0.
11	0.25635	SLV11-NL	Max	2.591E-14	261.2425	11-1	0.25635
11	0.5127	SLV11-NL	Max	2.866E-14	284.1013	11-1	0.5127
11	0.	SLV11-NL	Min	2.334E-14	239.8756	11-1	0.
11	0.25635	SLV11-NL	Min	2.591E-14	261.2425	11-1	0.25635
11	0.5127	SLV11-NL	Min	2.866E-14	284.1013	11-1	0.5127
11	0.	SLV12-NL	Max	2.963E-14	302.908	11-1	0.
11	0.25635	SLV12-NL	Max	3.200E-14	322.6839	11-1	0.25635
11	0.5127	SLV12-NL	Max	3.456E-14	343.947	11-1	0.5127
11	0.	SLV12-NL	Min	2.963E-14	302.908	11-1	0.
11	0.25635	SLV12-NL	Min	3.200E-14	322.6839	11-1	0.25635
11	0.5127	SLV12-NL	Min	3.456E-14	343.947	11-1	0.5127
11	0.	SLV13-NL	Max	2.412E-14	247.3258	11-1	0.
11	0.25635	SLV13-NL	Max	2.646E-14	266.8067	11-1	0.25635
11	0.5127	SLV13-NL	Max	2.897E-14	287.6886	11-1	0.5127
11	0.	SLV13-NL	Min	2.412E-14	247.3258	11-1	0.
11	0.25635	SLV13-NL	Min	2.646E-14	266.8067	11-1	0.25635

Table: Element Forces - Frames, Part 2 of 2

Frame	Station	OutputCase	StepType	M2	M3	FrameElem	ElemStation
	m			KN-m	KN-m		m
11	0.5127	SLV13-NL	Min	2.897E-14	287.6886	11-1	0.5127
11	0.	SLV14-NL	Max	2.588E-14	265.009	11-1	0.
11	0.25635	SLV14-NL	Max	2.819E-14	284.214	11-1	0.25635
11	0.5127	SLV14-NL	Max	3.066E-14	304.8187	11-1	0.5127
11	0.	SLV14-NL	Min	2.588E-14	265.009	11-1	0.
11	0.25635	SLV14-NL	Min	2.819E-14	284.214	11-1	0.25635
11	0.5127	SLV14-NL	Min	3.066E-14	304.8187	11-1	0.5127
11	0.	SLV15-NL	Max	2.798E-14	286.7089	11-1	0.
11	0.25635	SLV15-NL	Max	3.059E-14	308.4716	11-1	0.25635
11	0.5127	SLV15-NL	Max	3.339E-14	331.7727	11-1	0.5127
11	0.	SLV15-NL	Min	2.798E-14	286.7089	11-1	0.
11	0.25635	SLV15-NL	Min	3.059E-14	308.4716	11-1	0.25635
11	0.5127	SLV15-NL	Min	3.339E-14	331.7727	11-1	0.5127
11	0.	SLV16-NL	Max	2.970E-14	303.9777	11-1	0.
11	0.25635	SLV16-NL	Max	3.228E-14	325.5149	11-1	0.25635
11	0.5127	SLV16-NL	Max	3.506E-14	348.5889	11-1	0.5127
11	0.	SLV16-NL	Min	2.970E-14	303.9777	11-1	0.
11	0.25635	SLV16-NL	Min	3.228E-14	325.5149	11-1	0.25635
11	0.5127	SLV16-NL	Min	3.506E-14	348.5889	11-1	0.5127
12	0.	SLU 1-NL	Max	4.703E-14	476.1628	12-1	0.
12	0.25635	SLU 1-NL	Max	4.817E-14	485.6863	12-1	0.25635
12	0.5127	SLU 1-NL	Max	4.955E-14	497.1234	12-1	0.5127
12	0.	SLU 1-NL	Min	4.703E-14	476.1628	12-1	0.
12	0.25635	SLU 1-NL	Min	4.817E-14	485.6863	12-1	0.25635
12	0.5127	SLU 1-NL	Min	4.955E-14	497.1234	12-1	0.5127
12	0.	SLU 2-NL	Max	5.537E-14	560.4154	12-1	0.
12	0.25635	SLU 2-NL	Max	5.662E-14	570.8188	12-1	0.25635
12	0.5127	SLU 2-NL	Max	5.810E-14	583.1364	12-1	0.5127
12	0.	SLU 2-NL	Min	5.537E-14	560.4154	12-1	0.
12	0.25635	SLU 2-NL	Min	5.662E-14	570.8188	12-1	0.25635
12	0.5127	SLU 2-NL	Min	5.810E-14	583.1364	12-1	0.5127
12	0.	SLU 3-NL	Max	2.212E-14	224.1266	12-1	0.
12	0.25635	SLU 3-NL	Max	2.275E-14	229.3965	12-1	0.25635
12	0.5127	SLU 3-NL	Max	2.356E-14	236.1409	12-1	0.5127
12	0.	SLU 3-NL	Min	2.212E-14	224.1266	12-1	0.
12	0.25635	SLU 3-NL	Min	2.275E-14	229.3965	12-1	0.25635
12	0.5127	SLU 3-NL	Min	2.356E-14	236.1409	12-1	0.5127
12	0.	SLU 4-NL	Max	4.676E-14	474.1732	12-1	0.
12	0.25635	SLU 4-NL	Max	4.831E-14	487.0423	12-1	0.25635
12	0.5127	SLU 4-NL	Max	5.008E-14	501.8251	12-1	0.5127
12	0.	SLU 4-NL	Min	4.676E-14	474.1732	12-1	0.
12	0.25635	SLU 4-NL	Min	4.831E-14	487.0423	12-1	0.25635
12	0.5127	SLU 4-NL	Min	5.008E-14	501.8251	12-1	0.5127
12	0.	SLU 5-NL	Max	2.112E-14	214.7963	12-1	0.
12	0.25635	SLU 5-NL	Max	2.217E-14	223.597	12-1	0.25635
12	0.5127	SLU 5-NL	Max	2.341E-14	233.8721	12-1	0.5127
12	0.	SLU 5-NL	Min	2.112E-14	214.7963	12-1	0.
12	0.25635	SLU 5-NL	Min	2.217E-14	223.597	12-1	0.25635
12	0.5127	SLU 5-NL	Min	2.341E-14	233.8721	12-1	0.5127
12	0.	SLU 6-NL	Max	4.818E-14	487.0468	12-1	0.
12	0.25635	SLU 6-NL	Max	4.893E-14	493.3535	12-1	0.25635
12	0.5127	SLU 6-NL	Max	4.992E-14	501.5737	12-1	0.5127
12	0.	SLU 6-NL	Min	4.818E-14	487.0468	12-1	0.
12	0.25635	SLU 6-NL	Min	4.893E-14	493.3535	12-1	0.25635

Table: Element Forces - Frames, Part 2 of 2

Frame	Station	OutputCase	StepType	M2	M3	FrameElem	ElemStation
	m			KN-m	KN-m		m
12	0.5127	SLU 6-NL	Min	4.992E-14	501.5737	12-1	0.5127
12	0.	SLU 7-NL	Max	2.265E-14	228.7395	12-1	0.
12	0.25635	SLU 7-NL	Max	2.286E-14	230.4756	12-1	0.25635
12	0.5127	SLU 7-NL	Max	2.324E-14	233.6861	12-1	0.5127
12	0.	SLU 7-NL	Min	2.265E-14	228.7395	12-1	0.
12	0.25635	SLU 7-NL	Min	2.286E-14	230.4756	12-1	0.25635
12	0.5127	SLU 7-NL	Min	2.324E-14	233.6861	12-1	0.5127
12	0.	SLE-C-NL	Max	3.543E-14	358.7065	12-1	0.
12	0.25635	SLE-C-NL	Max	3.629E-14	365.8735	12-1	0.25635
12	0.5127	SLE-C-NL	Max	3.733E-14	374.5139	12-1	0.5127
12	0.	SLE-C-NL	Min	3.543E-14	358.7065	12-1	0.
12	0.25635	SLE-C-NL	Min	3.629E-14	365.8735	12-1	0.25635
12	0.5127	SLE-C-NL	Min	3.733E-14	374.5139	12-1	0.5127
12	0.	SLE-F-1-NL	Max	3.618E-14	366.2954	12-1	0.
12	0.25635	SLE-F-1-NL	Max	3.704E-14	373.4336	12-1	0.25635
12	0.5127	SLE-F-1-NL	Max	3.807E-14	382.0454	12-1	0.5127
12	0.	SLE-F-1-NL	Min	3.618E-14	366.2954	12-1	0.
12	0.25635	SLE-F-1-NL	Min	3.704E-14	373.4336	12-1	0.25635
12	0.5127	SLE-F-1-NL	Min	3.807E-14	382.0454	12-1	0.5127
12	0.	SLE-F-2-NL	Max	2.879E-14	291.7881	12-1	0.
12	0.25635	SLE-F-2-NL	Max	2.963E-14	298.7731	12-1	0.25635
12	0.5127	SLE-F-2-NL	Max	3.065E-14	307.2325	12-1	0.5127
12	0.	SLE-F-2-NL	Min	2.879E-14	291.7881	12-1	0.
12	0.25635	SLE-F-2-NL	Min	2.963E-14	298.7731	12-1	0.25635
12	0.5127	SLE-F-2-NL	Min	3.065E-14	307.2325	12-1	0.5127
12	0.	SLE-F-3-NL	Max	2.922E-14	295.6716	12-1	0.
12	0.25635	SLE-F-3-NL	Max	2.982E-14	300.7041	12-1	0.25635
12	0.5127	SLE-F-3-NL	Max	3.061E-14	307.2109	12-1	0.5127
12	0.	SLE-F-3-NL	Min	2.922E-14	295.6716	12-1	0.
12	0.25635	SLE-F-3-NL	Min	2.982E-14	300.7041	12-1	0.25635
12	0.5127	SLE-F-3-NL	Min	3.061E-14	307.2109	12-1	0.5127
12	0.	SLE-QP-NL	Max	3.046E-14	308.3903	12-1	0.
12	0.25635	SLE-QP-NL	Max	3.120E-14	314.5411	12-1	0.25635
12	0.5127	SLE-QP-NL	Max	3.211E-14	322.1663	12-1	0.5127
12	0.	SLE-QP-NL	Min	3.046E-14	308.3903	12-1	0.
12	0.25635	SLE-QP-NL	Min	3.120E-14	314.5411	12-1	0.25635
12	0.5127	SLE-QP-NL	Min	3.211E-14	322.1663	12-1	0.5127
12	0.	SLV1-NL	Max	2.409E-14	244.7137	12-1	0.
12	0.25635	SLV1-NL	Max	2.511E-14	253.2312	12-1	0.25635
12	0.5127	SLV1-NL	Max	2.632E-14	263.2383	12-1	0.5127
12	0.	SLV1-NL	Min	2.409E-14	244.7137	12-1	0.
12	0.25635	SLV1-NL	Min	2.511E-14	253.2312	12-1	0.25635
12	0.5127	SLV1-NL	Min	2.632E-14	263.2383	12-1	0.5127
12	0.	SLV2-NL	Max	3.053E-14	308.5818	12-1	0.
12	0.25635	SLV2-NL	Max	3.095E-14	312.0276	12-1	0.25635
12	0.5127	SLV2-NL	Max	3.154E-14	316.9736	12-1	0.5127
12	0.	SLV2-NL	Min	3.053E-14	308.5818	12-1	0.
12	0.25635	SLV2-NL	Min	3.095E-14	312.0276	12-1	0.25635
12	0.5127	SLV2-NL	Min	3.154E-14	316.9736	12-1	0.5127
12	0.	SLV3-NL	Max	2.416E-14	245.41	12-1	0.
12	0.25635	SLV3-NL	Max	2.518E-14	253.942	12-1	0.25635
12	0.5127	SLV3-NL	Max	2.638E-14	263.9221	12-1	0.5127
12	0.	SLV3-NL	Min	2.416E-14	245.41	12-1	0.
12	0.25635	SLV3-NL	Min	2.518E-14	253.942	12-1	0.25635

Table: Element Forces - Frames, Part 2 of 2

Frame	Station	OutputCase	StepType	M2	M3	FrameElem	ElemStation
	m			KN-m	KN-m		m
12	0.5127	SLV3-NL	Min	2.638E-14	263.9221	12-1	0.5127
12	0.	SLV4-NL	Max	3.060E-14	309.2673	12-1	0.
12	0.25635	SLV4-NL	Max	3.102E-14	312.7335	12-1	0.25635
12	0.5127	SLV4-NL	Max	3.161E-14	317.6583	12-1	0.5127
12	0.	SLV4-NL	Min	3.060E-14	309.2673	12-1	0.
12	0.25635	SLV4-NL	Min	3.102E-14	312.7335	12-1	0.25635
12	0.5127	SLV4-NL	Min	3.161E-14	317.6583	12-1	0.5127
12	0.	SLV5-NL	Max	2.953E-14	299.2196	12-1	0.
12	0.25635	SLV5-NL	Max	3.036E-14	306.0957	12-1	0.25635
12	0.5127	SLV5-NL	Max	3.137E-14	314.5135	12-1	0.5127
12	0.	SLV5-NL	Min	2.953E-14	299.2196	12-1	0.
12	0.25635	SLV5-NL	Min	3.036E-14	306.0957	12-1	0.25635
12	0.5127	SLV5-NL	Min	3.137E-14	314.5135	12-1	0.5127
12	0.	SLV6-NL	Max	3.141E-14	317.8431	12-1	0.
12	0.25635	SLV6-NL	Max	3.208E-14	323.4696	12-1	0.25635
12	0.5127	SLV6-NL	Max	3.294E-14	330.641	12-1	0.5127
12	0.	SLV6-NL	Min	3.141E-14	317.8431	12-1	0.
12	0.25635	SLV6-NL	Min	3.208E-14	323.4696	12-1	0.25635
12	0.5127	SLV6-NL	Min	3.294E-14	330.641	12-1	0.5127
12	0.	SLV7-NL	Max	2.976E-14	301.5409	12-1	0.
12	0.25635	SLV7-NL	Max	3.059E-14	308.4654	12-1	0.25635
12	0.5127	SLV7-NL	Max	3.160E-14	316.7932	12-1	0.5127
12	0.	SLV7-NL	Min	2.976E-14	301.5409	12-1	0.
12	0.25635	SLV7-NL	Min	3.059E-14	308.4654	12-1	0.25635
12	0.5127	SLV7-NL	Min	3.160E-14	316.7932	12-1	0.5127
12	0.	SLV8-NL	Max	3.163E-14	320.1268	12-1	0.
12	0.25635	SLV8-NL	Max	3.231E-14	325.8209	12-1	0.25635
12	0.5127	SLV8-NL	Max	3.317E-14	332.9217	12-1	0.5127
12	0.	SLV8-NL	Min	3.163E-14	320.1268	12-1	0.
12	0.25635	SLV8-NL	Min	3.231E-14	325.8209	12-1	0.25635
12	0.5127	SLV8-NL	Min	3.317E-14	332.9217	12-1	0.5127
12	0.	SLV9-NL	Max	2.667E-14	270.5239	12-1	0.
12	0.25635	SLV9-NL	Max	2.759E-14	278.2342	12-1	0.25635
12	0.5127	SLV9-NL	Max	2.870E-14	287.401	12-1	0.5127
12	0.	SLV9-NL	Min	2.667E-14	270.5239	12-1	0.
12	0.25635	SLV9-NL	Min	2.759E-14	278.2342	12-1	0.25635
12	0.5127	SLV9-NL	Min	2.870E-14	287.401	12-1	0.5127
12	0.	SLV10-NL	Max	3.268E-14	330.5032	12-1	0.
12	0.25635	SLV10-NL	Max	3.324E-14	335.1602	12-1	0.25635
12	0.5127	SLV10-NL	Max	3.398E-14	341.2677	12-1	0.5127
12	0.	SLV10-NL	Min	3.268E-14	330.5032	12-1	0.
12	0.25635	SLV10-NL	Min	3.324E-14	335.1602	12-1	0.25635
12	0.5127	SLV10-NL	Min	3.398E-14	341.2677	12-1	0.5127
12	0.	SLV11-NL	Max	2.800E-14	283.9784	12-1	0.
12	0.25635	SLV11-NL	Max	2.895E-14	291.8962	12-1	0.25635
12	0.5127	SLV11-NL	Max	3.008E-14	301.3117	12-1	0.5127
12	0.	SLV11-NL	Min	2.800E-14	283.9784	12-1	0.
12	0.25635	SLV11-NL	Min	2.895E-14	291.8962	12-1	0.25635
12	0.5127	SLV11-NL	Min	3.008E-14	301.3117	12-1	0.5127
12	0.	SLV12-NL	Max	3.401E-14	343.9051	12-1	0.
12	0.25635	SLV12-NL	Max	3.459E-14	348.7955	12-1	0.25635
12	0.5127	SLV12-NL	Max	3.536E-14	355.1776	12-1	0.5127
12	0.	SLV12-NL	Min	3.401E-14	343.9051	12-1	0.
12	0.25635	SLV12-NL	Min	3.459E-14	348.7955	12-1	0.25635

Table: Element Forces - Frames, Part 2 of 2

Frame	Station	OutputCase	StepType	M2	M3	FrameElem	ElemStation
	m			KN-m	KN-m		m
12	0.5127	SLV12-NL	Min	3.536E-14	355.1776	12-1	0.5127
12	0.	SLV13-NL	Max	2.839E-14	287.6119	12-1	0.
12	0.25635	SLV13-NL	Max	2.915E-14	293.9536	12-1	0.25635
12	0.5127	SLV13-NL	Max	3.009E-14	301.7014	12-1	0.5127
12	0.	SLV13-NL	Min	2.839E-14	287.6119	12-1	0.
12	0.25635	SLV13-NL	Min	2.915E-14	293.9536	12-1	0.25635
12	0.5127	SLV13-NL	Min	3.009E-14	301.7014	12-1	0.5127
12	0.	SLV14-NL	Max	3.011E-14	304.7526	12-1	0.
12	0.25635	SLV14-NL	Max	3.079E-14	310.4114	12-1	0.25635
12	0.5127	SLV14-NL	Max	3.164E-14	317.4746	12-1	0.5127
12	0.	SLV14-NL	Min	3.011E-14	304.7526	12-1	0.
12	0.25635	SLV14-NL	Min	3.079E-14	310.4114	12-1	0.25635
12	0.5127	SLV14-NL	Min	3.164E-14	317.4746	12-1	0.5127
12	0.	SLV15-NL	Max	3.275E-14	331.682	12-1	0.
12	0.25635	SLV15-NL	Max	3.359E-14	338.7153	12-1	0.25635
12	0.5127	SLV15-NL	Max	3.463E-14	347.2926	12-1	0.5127
12	0.	SLV15-NL	Min	3.275E-14	331.682	12-1	0.
12	0.25635	SLV15-NL	Min	3.359E-14	338.7153	12-1	0.25635
12	0.5127	SLV15-NL	Min	3.463E-14	347.2926	12-1	0.5127
12	0.	SLV16-NL	Max	3.443E-14	348.5096	12-1	0.
12	0.25635	SLV16-NL	Max	3.520E-14	354.9174	12-1	0.25635
12	0.5127	SLV16-NL	Max	3.616E-14	362.8672	12-1	0.5127
12	0.	SLV16-NL	Min	3.443E-14	348.5096	12-1	0.
12	0.25635	SLV16-NL	Min	3.520E-14	354.9174	12-1	0.25635
12	0.5127	SLV16-NL	Min	3.616E-14	362.8672	12-1	0.5127
13	0.	SLU 1-NL	Max	4.955E-14	497.1234	13-1	0.
13	0.25635	SLU 1-NL	Max	4.817E-14	485.6863	13-1	0.25635
13	0.5127	SLU 1-NL	Max	4.703E-14	476.1628	13-1	0.5127
13	0.	SLU 1-NL	Min	4.955E-14	497.1234	13-1	0.
13	0.25635	SLU 1-NL	Min	4.817E-14	485.6863	13-1	0.25635
13	0.5127	SLU 1-NL	Min	4.703E-14	476.1628	13-1	0.5127
13	0.	SLU 2-NL	Max	5.810E-14	583.1364	13-1	0.
13	0.25635	SLU 2-NL	Max	5.662E-14	570.8188	13-1	0.25635
13	0.5127	SLU 2-NL	Max	5.537E-14	560.4154	13-1	0.5127
13	0.	SLU 2-NL	Min	5.810E-14	583.1364	13-1	0.
13	0.25635	SLU 2-NL	Min	5.662E-14	570.8188	13-1	0.25635
13	0.5127	SLU 2-NL	Min	5.537E-14	560.4154	13-1	0.5127
13	0.	SLU 3-NL	Max	2.356E-14	236.1409	13-1	0.
13	0.25635	SLU 3-NL	Max	2.275E-14	229.3965	13-1	0.25635
13	0.5127	SLU 3-NL	Max	2.212E-14	224.1266	13-1	0.5127
13	0.	SLU 3-NL	Min	2.356E-14	236.1409	13-1	0.
13	0.25635	SLU 3-NL	Min	2.275E-14	229.3965	13-1	0.25635
13	0.5127	SLU 3-NL	Min	2.212E-14	224.1266	13-1	0.5127
13	0.	SLU 4-NL	Max	4.992E-14	501.5737	13-1	0.
13	0.25635	SLU 4-NL	Max	4.893E-14	493.3535	13-1	0.25635
13	0.5127	SLU 4-NL	Max	4.818E-14	487.0468	13-1	0.5127
13	0.	SLU 4-NL	Min	4.992E-14	501.5737	13-1	0.
13	0.25635	SLU 4-NL	Min	4.893E-14	493.3535	13-1	0.25635
13	0.5127	SLU 4-NL	Min	4.818E-14	487.0468	13-1	0.5127
13	0.	SLU 5-NL	Max	2.324E-14	233.6861	13-1	0.
13	0.25635	SLU 5-NL	Max	2.286E-14	230.4756	13-1	0.25635
13	0.5127	SLU 5-NL	Max	2.265E-14	228.7395	13-1	0.5127
13	0.	SLU 5-NL	Min	2.324E-14	233.6861	13-1	0.
13	0.25635	SLU 5-NL	Min	2.286E-14	230.4756	13-1	0.25635

Table: Element Forces - Frames, Part 2 of 2

Frame	Station	OutputCase	StepType	M2	M3	FrameElem	ElemStation
	m			KN-m	KN-m		m
13	0.5127	SLU 5-NL	Min	2.265E-14	228.7395	13-1	0.5127
13	0.	SLU 6-NL	Max	5.008E-14	501.8251	13-1	0.
13	0.25635	SLU 6-NL	Max	4.831E-14	487.0423	13-1	0.25635
13	0.5127	SLU 6-NL	Max	4.676E-14	474.1732	13-1	0.5127
13	0.	SLU 6-NL	Min	5.008E-14	501.8251	13-1	0.
13	0.25635	SLU 6-NL	Min	4.831E-14	487.0423	13-1	0.25635
13	0.5127	SLU 6-NL	Min	4.676E-14	474.1732	13-1	0.5127
13	0.	SLU 7-NL	Max	2.341E-14	233.8721	13-1	0.
13	0.25635	SLU 7-NL	Max	2.217E-14	223.597	13-1	0.25635
13	0.5127	SLU 7-NL	Max	2.112E-14	214.7963	13-1	0.5127
13	0.	SLU 7-NL	Min	2.341E-14	233.8721	13-1	0.
13	0.25635	SLU 7-NL	Min	2.217E-14	223.597	13-1	0.25635
13	0.5127	SLU 7-NL	Min	2.112E-14	214.7963	13-1	0.5127
13	0.	SLE-C-NL	Max	3.733E-14	374.5139	13-1	0.
13	0.25635	SLE-C-NL	Max	3.629E-14	365.8735	13-1	0.25635
13	0.5127	SLE-C-NL	Max	3.543E-14	358.7065	13-1	0.5127
13	0.	SLE-C-NL	Min	3.733E-14	374.5139	13-1	0.
13	0.25635	SLE-C-NL	Min	3.629E-14	365.8735	13-1	0.25635
13	0.5127	SLE-C-NL	Min	3.543E-14	358.7065	13-1	0.5127
13	0.	SLE-F-1-NL	Max	3.807E-14	382.0454	13-1	0.
13	0.25635	SLE-F-1-NL	Max	3.704E-14	373.4336	13-1	0.25635
13	0.5127	SLE-F-1-NL	Max	3.618E-14	366.2954	13-1	0.5127
13	0.	SLE-F-1-NL	Min	3.807E-14	382.0454	13-1	0.
13	0.25635	SLE-F-1-NL	Min	3.704E-14	373.4336	13-1	0.25635
13	0.5127	SLE-F-1-NL	Min	3.618E-14	366.2954	13-1	0.5127
13	0.	SLE-F-2-NL	Max	3.061E-14	307.2109	13-1	0.
13	0.25635	SLE-F-2-NL	Max	2.982E-14	300.7041	13-1	0.25635
13	0.5127	SLE-F-2-NL	Max	2.922E-14	295.6716	13-1	0.5127
13	0.	SLE-F-2-NL	Min	3.061E-14	307.2109	13-1	0.
13	0.25635	SLE-F-2-NL	Min	2.982E-14	300.7041	13-1	0.25635
13	0.5127	SLE-F-2-NL	Min	2.922E-14	295.6716	13-1	0.5127
13	0.	SLE-F-3-NL	Max	3.065E-14	307.2325	13-1	0.
13	0.25635	SLE-F-3-NL	Max	2.963E-14	298.7731	13-1	0.25635
13	0.5127	SLE-F-3-NL	Max	2.879E-14	291.7881	13-1	0.5127
13	0.	SLE-F-3-NL	Min	3.065E-14	307.2325	13-1	0.
13	0.25635	SLE-F-3-NL	Min	2.963E-14	298.7731	13-1	0.25635
13	0.5127	SLE-F-3-NL	Min	2.879E-14	291.7881	13-1	0.5127
13	0.	SLE-QP-NL	Max	3.211E-14	322.1663	13-1	0.
13	0.25635	SLE-QP-NL	Max	3.120E-14	314.5411	13-1	0.25635
13	0.5127	SLE-QP-NL	Max	3.046E-14	308.3903	13-1	0.5127
13	0.	SLE-QP-NL	Min	3.211E-14	322.1663	13-1	0.
13	0.25635	SLE-QP-NL	Min	3.120E-14	314.5411	13-1	0.25635
13	0.5127	SLE-QP-NL	Min	3.046E-14	308.3903	13-1	0.5127
13	0.	SLV1-NL	Max	2.618E-14	263.0596	13-1	0.
13	0.25635	SLV1-NL	Max	2.567E-14	258.7904	13-1	0.25635
13	0.5127	SLV1-NL	Max	2.533E-14	256.0203	13-1	0.5127
13	0.	SLV1-NL	Min	2.618E-14	263.0596	13-1	0.
13	0.25635	SLV1-NL	Min	2.567E-14	258.7904	13-1	0.25635
13	0.5127	SLV1-NL	Min	2.533E-14	256.0203	13-1	0.5127
13	0.	SLV2-NL	Max	3.168E-14	317.1471	13-1	0.
13	0.25635	SLV2-NL	Max	3.041E-14	306.6461	13-1	0.25635
13	0.5127	SLV2-NL	Max	2.933E-14	297.6359	13-1	0.5127
13	0.	SLV2-NL	Min	3.168E-14	317.1471	13-1	0.
13	0.25635	SLV2-NL	Min	3.041E-14	306.6461	13-1	0.25635

Table: Element Forces - Frames, Part 2 of 2

Frame	Station	OutputCase	StepType	M2	M3	FrameElem	ElemStation
	m			KN-m	KN-m		m
13	0.5127	SLV2-NL	Min	2.933E-14	297.6359	13-1	0.5127
13	0.	SLV3-NL	Max	2.625E-14	263.7444	13-1	0.
13	0.25635	SLV3-NL	Max	2.574E-14	259.4963	13-1	0.25635
13	0.5127	SLV3-NL	Max	2.540E-14	256.7059	13-1	0.5127
13	0.	SLV3-NL	Min	2.625E-14	263.7444	13-1	0.
13	0.25635	SLV3-NL	Min	2.574E-14	259.4963	13-1	0.25635
13	0.5127	SLV3-NL	Min	2.540E-14	256.7059	13-1	0.5127
13	0.	SLV4-NL	Max	3.174E-14	317.8308	13-1	0.
13	0.25635	SLV4-NL	Max	3.048E-14	307.3568	13-1	0.25635
13	0.5127	SLV4-NL	Max	2.940E-14	298.3322	13-1	0.5127
13	0.	SLV4-NL	Min	3.174E-14	317.8308	13-1	0.
13	0.25635	SLV4-NL	Min	3.048E-14	307.3568	13-1	0.25635
13	0.5127	SLV4-NL	Min	2.940E-14	298.3322	13-1	0.5127
13	0.	SLV5-NL	Max	3.134E-14	314.468	13-1	0.
13	0.25635	SLV5-NL	Max	3.050E-14	307.4995	13-1	0.25635
13	0.5127	SLV5-NL	Max	2.985E-14	302.0756	13-1	0.5127
13	0.	SLV5-NL	Min	3.134E-14	314.468	13-1	0.
13	0.25635	SLV5-NL	Min	3.050E-14	307.4995	13-1	0.25635
13	0.5127	SLV5-NL	Min	2.985E-14	302.0756	13-1	0.5127
13	0.	SLV6-NL	Max	3.298E-14	330.685	13-1	0.
13	0.25635	SLV6-NL	Max	3.195E-14	322.119	13-1	0.25635
13	0.5127	SLV6-NL	Max	3.111E-14	315.095	13-1	0.5127
13	0.	SLV6-NL	Min	3.298E-14	330.685	13-1	0.
13	0.25635	SLV6-NL	Min	3.195E-14	322.119	13-1	0.25635
13	0.5127	SLV6-NL	Min	3.111E-14	315.095	13-1	0.5127
13	0.	SLV7-NL	Max	3.156E-14	316.7488	13-1	0.
13	0.25635	SLV7-NL	Max	3.073E-14	309.851	13-1	0.25635
13	0.5127	SLV7-NL	Max	3.007E-14	304.3593	13-1	0.5127
13	0.	SLV7-NL	Min	3.156E-14	316.7488	13-1	0.
13	0.25635	SLV7-NL	Min	3.073E-14	309.851	13-1	0.25635
13	0.5127	SLV7-NL	Min	3.007E-14	304.3593	13-1	0.5127
13	0.	SLV8-NL	Max	3.320E-14	332.9647	13-1	0.
13	0.25635	SLV8-NL	Max	3.218E-14	324.4885	13-1	0.25635
13	0.5127	SLV8-NL	Max	3.133E-14	317.4162	13-1	0.5127
13	0.	SLV8-NL	Min	3.320E-14	332.9647	13-1	0.
13	0.25635	SLV8-NL	Min	3.218E-14	324.4885	13-1	0.25635
13	0.5127	SLV8-NL	Min	3.133E-14	317.4162	13-1	0.5127
13	0.	SLV9-NL	Max	2.861E-14	287.3579	13-1	0.
13	0.25635	SLV9-NL	Max	2.796E-14	281.927	13-1	0.25635
13	0.5127	SLV9-NL	Max	2.748E-14	277.9454	13-1	0.5127
13	0.	SLV9-NL	Min	2.861E-14	287.3579	13-1	0.
13	0.25635	SLV9-NL	Min	2.796E-14	281.927	13-1	0.25635
13	0.5127	SLV9-NL	Min	2.748E-14	277.9454	13-1	0.5127
13	0.	SLV10-NL	Max	3.405E-14	341.3058	13-1	0.
13	0.25635	SLV10-NL	Max	3.289E-14	331.6451	13-1	0.25635
13	0.5127	SLV10-NL	Max	3.191E-14	323.442	13-1	0.5127
13	0.	SLV10-NL	Min	3.405E-14	341.3058	13-1	0.
13	0.25635	SLV10-NL	Min	3.289E-14	331.6451	13-1	0.25635
13	0.5127	SLV10-NL	Min	3.191E-14	323.442	13-1	0.5127
13	0.	SLV11-NL	Max	3.000E-14	301.2683	13-1	0.
13	0.25635	SLV11-NL	Max	2.931E-14	295.5627	13-1	0.25635
13	0.5127	SLV11-NL	Max	2.881E-14	291.3478	13-1	0.5127
13	0.	SLV11-NL	Min	3.000E-14	301.2683	13-1	0.
13	0.25635	SLV11-NL	Min	2.931E-14	295.5627	13-1	0.25635

Table: Element Forces - Frames, Part 2 of 2

Frame	Station	OutputCase	StepType	M2	M3	FrameElem	ElemStation
	m			KN-m	KN-m		m
13	0.5127	SLV11-NL	Min	2.881E-14	291.3478	13-1	0.5127
13	0.	SLV12-NL	Max	3.544E-14	355.216	13-1	0.
13	0.25635	SLV12-NL	Max	3.425E-14	345.3066	13-1	0.25635
13	0.5127	SLV12-NL	Max	3.324E-14	336.8962	13-1	0.5127
13	0.	SLV12-NL	Min	3.544E-14	355.216	13-1	0.
13	0.25635	SLV12-NL	Min	3.425E-14	345.3066	13-1	0.25635
13	0.5127	SLV12-NL	Min	3.324E-14	336.8962	13-1	0.5127
13	0.	SLV13-NL	Max	3.007E-14	301.6958	13-1	0.
13	0.25635	SLV13-NL	Max	2.924E-14	294.828	13-1	0.25635
13	0.5127	SLV13-NL	Max	2.859E-14	289.3641	13-1	0.5127
13	0.	SLV13-NL	Min	3.007E-14	301.6958	13-1	0.
13	0.25635	SLV13-NL	Min	2.924E-14	294.828	13-1	0.25635
13	0.5127	SLV13-NL	Min	2.859E-14	289.3641	13-1	0.5127
13	0.	SLV14-NL	Max	3.165E-14	317.4799	13-1	0.
13	0.25635	SLV14-NL	Max	3.070E-14	309.584	13-1	0.25635
13	0.5127	SLV14-NL	Max	2.993E-14	303.0947	13-1	0.5127
13	0.	SLV14-NL	Min	3.165E-14	317.4799	13-1	0.
13	0.25635	SLV14-NL	Min	3.070E-14	309.584	13-1	0.25635
13	0.5127	SLV14-NL	Min	2.993E-14	303.0947	13-1	0.5127
13	0.	SLV15-NL	Max	3.461E-14	347.2868	13-1	0.
13	0.25635	SLV15-NL	Max	3.367E-14	339.5191	13-1	0.25635
13	0.5127	SLV15-NL	Max	3.293E-14	333.2931	13-1	0.5127
13	0.	SLV15-NL	Min	3.461E-14	347.2868	13-1	0.
13	0.25635	SLV15-NL	Min	3.367E-14	339.5191	13-1	0.25635
13	0.5127	SLV15-NL	Min	3.293E-14	333.2931	13-1	0.5127
13	0.	SLV16-NL	Max	3.617E-14	362.873	13-1	0.
13	0.25635	SLV16-NL	Max	3.512E-14	354.1381	13-1	0.25635
13	0.5127	SLV16-NL	Max	3.426E-14	346.9474	13-1	0.5127
13	0.	SLV16-NL	Min	3.617E-14	362.873	13-1	0.
13	0.25635	SLV16-NL	Min	3.512E-14	354.1381	13-1	0.25635
13	0.5127	SLV16-NL	Min	3.426E-14	346.9474	13-1	0.5127
14	0.	SLU 1-NL	Max	4.792E-14	476.3247	14-1	0.
14	0.25635	SLU 1-NL	Max	4.404E-14	443.9939	14-1	0.25635
14	0.5127	SLU 1-NL	Max	4.038E-14	413.5703	14-1	0.5127
14	0.	SLU 1-NL	Min	4.792E-14	476.3247	14-1	0.
14	0.25635	SLU 1-NL	Min	4.404E-14	443.9939	14-1	0.25635
14	0.5127	SLU 1-NL	Min	4.038E-14	413.5703	14-1	0.5127
14	0.	SLU 2-NL	Max	5.633E-14	560.5765	14-1	0.
14	0.25635	SLU 2-NL	Max	5.213E-14	525.604	14-1	0.25635
14	0.5127	SLU 2-NL	Max	4.816E-14	492.5391	14-1	0.5127
14	0.	SLU 2-NL	Min	5.633E-14	560.5765	14-1	0.
14	0.25635	SLU 2-NL	Min	5.213E-14	525.604	14-1	0.25635
14	0.5127	SLU 2-NL	Min	4.816E-14	492.5391	14-1	0.5127
14	0.	SLU 3-NL	Max	2.263E-14	224.2016	14-1	0.
14	0.25635	SLU 3-NL	Max	2.038E-14	205.488	14-1	0.25635
14	0.5127	SLU 3-NL	Max	1.831E-14	188.2437	14-1	0.5127
14	0.	SLU 3-NL	Min	2.263E-14	224.2016	14-1	0.
14	0.25635	SLU 3-NL	Min	2.038E-14	205.488	14-1	0.25635
14	0.5127	SLU 3-NL	Min	1.831E-14	188.2437	14-1	0.5127
14	0.	SLU 4-NL	Max	4.892E-14	486.9576	14-1	0.
14	0.25635	SLU 4-NL	Max	4.537E-14	457.4371	14-1	0.25635
14	0.5127	SLU 4-NL	Max	4.205E-14	429.8238	14-1	0.5127
14	0.	SLU 4-NL	Min	4.892E-14	486.9576	14-1	0.
14	0.25635	SLU 4-NL	Min	4.537E-14	457.4371	14-1	0.25635

Table: Element Forces - Frames, Part 2 of 2

Frame	Station	OutputCase	StepType	M2	M3	FrameElem	ElemStation
	m			KN-m	KN-m		m
14	0.5127	SLU 4-NL	Min	4.205E-14	429.8238	14-1	0.5127
14	0.	SLU 5-NL	Max	2.300E-14	228.6278	14-1	0.
14	0.25635	SLU 5-NL	Max	2.114E-14	213.1549	14-1	0.25635
14	0.5127	SLU 5-NL	Max	1.946E-14	199.1513	14-1	0.5127
14	0.	SLU 5-NL	Min	2.300E-14	228.6278	14-1	0.
14	0.25635	SLU 5-NL	Min	2.114E-14	213.1549	14-1	0.25635
14	0.5127	SLU 5-NL	Min	1.946E-14	199.1513	14-1	0.5127
14	0.	SLU 6-NL	Max	4.781E-14	474.5823	14-1	0.
14	0.25635	SLU 6-NL	Max	4.355E-14	439.0548	14-1	0.25635
14	0.5127	SLU 6-NL	Max	3.951E-14	405.4346	14-1	0.5127
14	0.	SLU 6-NL	Min	4.781E-14	474.5823	14-1	0.
14	0.25635	SLU 6-NL	Min	4.355E-14	439.0548	14-1	0.25635
14	0.5127	SLU 6-NL	Min	3.951E-14	405.4346	14-1	0.5127
14	0.	SLU 7-NL	Max	2.179E-14	215.0534	14-1	0.
14	0.25635	SLU 7-NL	Max	1.915E-14	193.1085	14-1	0.25635
14	0.5127	SLU 7-NL	Max	1.669E-14	172.6331	14-1	0.5127
14	0.	SLU 7-NL	Min	2.179E-14	215.0534	14-1	0.
14	0.25635	SLU 7-NL	Min	1.915E-14	193.1085	14-1	0.25635
14	0.5127	SLU 7-NL	Min	1.669E-14	172.6331	14-1	0.5127
14	0.	SLE-C-NL	Max	3.610E-14	358.7993	14-1	0.
14	0.25635	SLE-C-NL	Max	3.317E-14	334.4021	14-1	0.25635
14	0.5127	SLE-C-NL	Max	3.041E-14	311.4732	14-1	0.5127
14	0.	SLE-C-NL	Min	3.610E-14	358.7993	14-1	0.
14	0.25635	SLE-C-NL	Min	3.317E-14	334.4021	14-1	0.25635
14	0.5127	SLE-C-NL	Min	3.041E-14	311.4732	14-1	0.5127
14	0.	SLE-F-1-NL	Max	3.685E-14	366.3843	14-1	0.
14	0.25635	SLE-F-1-NL	Max	3.393E-14	342.0715	14-1	0.25635
14	0.5127	SLE-F-1-NL	Max	3.118E-14	319.2272	14-1	0.5127
14	0.	SLE-F-1-NL	Min	3.685E-14	366.3843	14-1	0.
14	0.25635	SLE-F-1-NL	Min	3.393E-14	342.0715	14-1	0.25635
14	0.5127	SLE-F-1-NL	Min	3.118E-14	319.2272	14-1	0.5127
14	0.	SLE-F-2-NL	Max	2.975E-14	295.7249	14-1	0.
14	0.25635	SLE-F-2-NL	Max	2.734E-14	275.6989	14-1	0.25635
14	0.5127	SLE-F-2-NL	Max	2.512E-14	257.1421	14-1	0.5127
14	0.	SLE-F-2-NL	Min	2.975E-14	295.7249	14-1	0.
14	0.25635	SLE-F-2-NL	Min	2.734E-14	275.6989	14-1	0.25635
14	0.5127	SLE-F-2-NL	Min	2.512E-14	257.1421	14-1	0.5127
14	0.	SLE-F-3-NL	Max	2.941E-14	291.8837	14-1	0.
14	0.25635	SLE-F-3-NL	Max	2.678E-14	270.0487	14-1	0.25635
14	0.5127	SLE-F-3-NL	Max	2.434E-14	249.6829	14-1	0.5127
14	0.	SLE-F-3-NL	Min	2.941E-14	291.8837	14-1	0.
14	0.25635	SLE-F-3-NL	Min	2.678E-14	270.0487	14-1	0.25635
14	0.5127	SLE-F-3-NL	Min	2.434E-14	249.6829	14-1	0.5127
14	0.	SLE-QP-NL	Max	3.104E-14	308.4648	14-1	0.
14	0.25635	SLE-QP-NL	Max	2.847E-14	287.108	14-1	0.25635
14	0.5127	SLE-QP-NL	Max	2.609E-14	267.2203	14-1	0.5127
14	0.	SLE-QP-NL	Min	3.104E-14	308.4648	14-1	0.
14	0.25635	SLE-QP-NL	Min	2.847E-14	287.108	14-1	0.25635
14	0.5127	SLE-QP-NL	Min	2.609E-14	267.2203	14-1	0.5127
14	0.	SLV1-NL	Max	2.574E-14	255.9198	14-1	0.
14	0.25635	SLV1-NL	Max	2.367E-14	238.6505	14-1	0.25635
14	0.5127	SLV1-NL	Max	2.178E-14	222.8834	14-1	0.5127
14	0.	SLV1-NL	Min	2.574E-14	255.9198	14-1	0.
14	0.25635	SLV1-NL	Min	2.367E-14	238.6505	14-1	0.25635

Table: Element Forces - Frames, Part 2 of 2

Frame	Station	OutputCase	StepType	M2	M3	FrameElem	ElemStation
	m			KN-m	KN-m		m
14	0.5127	SLV1-NL	Min	2.178E-14	222.8834	14-1	0.5127
14	0.	SLV2-NL	Max	3.005E-14	297.8841	14-1	0.
14	0.25635	SLV2-NL	Max	2.715E-14	273.7354	14-1	0.25635
14	0.5127	SLV2-NL	Max	2.443E-14	251.0638	14-1	0.5127
14	0.	SLV2-NL	Min	3.005E-14	297.8841	14-1	0.
14	0.25635	SLV2-NL	Min	2.715E-14	273.7354	14-1	0.25635
14	0.5127	SLV2-NL	Min	2.443E-14	251.0638	14-1	0.5127
14	0.	SLV3-NL	Max	2.581E-14	256.6057	14-1	0.
14	0.25635	SLV3-NL	Max	2.374E-14	239.3643	14-1	0.25635
14	0.5127	SLV3-NL	Max	2.184E-14	223.5838	14-1	0.5127
14	0.	SLV3-NL	Min	2.581E-14	256.6057	14-1	0.
14	0.25635	SLV3-NL	Min	2.374E-14	239.3643	14-1	0.25635
14	0.5127	SLV3-NL	Min	2.184E-14	223.5838	14-1	0.5127
14	0.	SLV4-NL	Max	3.012E-14	298.5786	14-1	0.
14	0.25635	SLV4-NL	Max	2.722E-14	274.4633	14-1	0.25635
14	0.5127	SLV4-NL	Max	2.450E-14	251.7839	14-1	0.5127
14	0.	SLV4-NL	Min	3.012E-14	298.5786	14-1	0.
14	0.25635	SLV4-NL	Min	2.722E-14	274.4633	14-1	0.25635
14	0.5127	SLV4-NL	Min	2.450E-14	251.7839	14-1	0.5127
14	0.	SLV5-NL	Max	3.040E-14	302.1098	14-1	0.
14	0.25635	SLV5-NL	Max	2.790E-14	281.2744	14-1	0.25635
14	0.5127	SLV5-NL	Max	2.558E-14	261.9806	14-1	0.5127
14	0.	SLV5-NL	Min	3.040E-14	302.1098	14-1	0.
14	0.25635	SLV5-NL	Min	2.790E-14	281.2744	14-1	0.25635
14	0.5127	SLV5-NL	Min	2.558E-14	261.9806	14-1	0.5127
14	0.	SLV6-NL	Max	3.174E-14	315.2177	14-1	0.
14	0.25635	SLV6-NL	Max	2.902E-14	292.5711	14-1	0.25635
14	0.5127	SLV6-NL	Max	2.648E-14	271.4585	14-1	0.5127
14	0.	SLV6-NL	Min	3.174E-14	315.2177	14-1	0.
14	0.25635	SLV6-NL	Min	2.902E-14	292.5711	14-1	0.25635
14	0.5127	SLV6-NL	Min	2.648E-14	271.4585	14-1	0.5127
14	0.	SLV7-NL	Max	3.062E-14	304.392	14-1	0.
14	0.25635	SLV7-NL	Max	2.813E-14	283.6499	14-1	0.25635
14	0.5127	SLV7-NL	Max	2.581E-14	264.3116	14-1	0.5127
14	0.	SLV7-NL	Min	3.062E-14	304.392	14-1	0.
14	0.25635	SLV7-NL	Min	2.813E-14	283.6499	14-1	0.25635
14	0.5127	SLV7-NL	Min	2.581E-14	264.3116	14-1	0.5127
14	0.	SLV8-NL	Max	3.197E-14	317.5352	14-1	0.
14	0.25635	SLV8-NL	Max	2.926E-14	295.	14-1	0.25635
14	0.5127	SLV8-NL	Max	2.672E-14	273.8611	14-1	0.5127
14	0.	SLV8-NL	Min	3.197E-14	317.5352	14-1	0.
14	0.25635	SLV8-NL	Min	2.926E-14	295.	14-1	0.25635
14	0.5127	SLV8-NL	Min	2.672E-14	273.8611	14-1	0.5127
14	0.	SLV9-NL	Max	2.796E-14	277.9788	14-1	0.
14	0.25635	SLV9-NL	Max	2.572E-14	259.3011	14-1	0.25635
14	0.5127	SLV9-NL	Max	2.365E-14	242.0592	14-1	0.5127
14	0.	SLV9-NL	Min	2.796E-14	277.9788	14-1	0.
14	0.25635	SLV9-NL	Min	2.572E-14	259.3011	14-1	0.25635
14	0.5127	SLV9-NL	Min	2.365E-14	242.0592	14-1	0.5127
14	0.	SLV10-NL	Max	3.259E-14	323.5553	14-1	0.
14	0.25635	SLV10-NL	Max	2.973E-14	299.7662	14-1	0.25635
14	0.5127	SLV10-NL	Max	2.705E-14	277.4381	14-1	0.5127
14	0.	SLV10-NL	Min	3.259E-14	323.5553	14-1	0.
14	0.25635	SLV10-NL	Min	2.973E-14	299.7662	14-1	0.25635

Table: Element Forces - Frames, Part 2 of 2

Frame	Station	OutputCase	StepType	M2	M3	FrameElem	ElemStation
	m			KN-m	KN-m		m
14	0.5127	SLV10-NL	Min	2.705E-14	277.4381	14-1	0.5127
14	0.	SLV11-NL	Max	2.931E-14	291.385	14-1	0.
14	0.25635	SLV11-NL	Max	2.697E-14	271.9526	14-1	0.25635
14	0.5127	SLV11-NL	Max	2.482E-14	253.9971	14-1	0.5127
14	0.	SLV11-NL	Min	2.931E-14	291.385	14-1	0.
14	0.25635	SLV11-NL	Min	2.697E-14	271.9526	14-1	0.25635
14	0.5127	SLV11-NL	Min	2.482E-14	253.9971	14-1	0.5127
14	0.	SLV12-NL	Max	3.394E-14	337.0138	14-1	0.
14	0.25635	SLV12-NL	Max	3.099E-14	312.4941	14-1	0.25635
14	0.5127	SLV12-NL	Max	2.823E-14	289.4767	14-1	0.5127
14	0.	SLV12-NL	Min	3.394E-14	337.0138	14-1	0.
14	0.25635	SLV12-NL	Min	3.099E-14	312.4941	14-1	0.25635
14	0.5127	SLV12-NL	Min	2.823E-14	289.4767	14-1	0.5127
14	0.	SLV13-NL	Max	2.913E-14	289.4299	14-1	0.
14	0.25635	SLV13-NL	Max	2.671E-14	269.3595	14-1	0.25635
14	0.5127	SLV13-NL	Max	2.447E-14	250.6856	14-1	0.5127
14	0.	SLV13-NL	Min	2.913E-14	289.4299	14-1	0.
14	0.25635	SLV13-NL	Min	2.671E-14	269.3595	14-1	0.25635
14	0.5127	SLV13-NL	Min	2.447E-14	250.6856	14-1	0.5127
14	0.	SLV14-NL	Max	3.052E-14	303.171	14-1	0.
14	0.25635	SLV14-NL	Max	2.795E-14	281.7992	14-1	0.25635
14	0.5127	SLV14-NL	Max	2.555E-14	261.8316	14-1	0.5127
14	0.	SLV14-NL	Min	3.052E-14	303.171	14-1	0.
14	0.25635	SLV14-NL	Min	2.795E-14	281.7992	14-1	0.25635
14	0.5127	SLV14-NL	Min	2.555E-14	261.8316	14-1	0.5127
14	0.	SLV15-NL	Max	3.354E-14	333.3725	14-1	0.
14	0.25635	SLV15-NL	Max	3.083E-14	310.8167	14-1	0.25635
14	0.5127	SLV15-NL	Max	2.830E-14	289.7947	14-1	0.5127
14	0.	SLV15-NL	Min	3.354E-14	333.3725	14-1	0.
14	0.25635	SLV15-NL	Min	3.083E-14	310.8167	14-1	0.25635
14	0.5127	SLV15-NL	Min	2.830E-14	289.7947	14-1	0.5127
14	0.	SLV16-NL	Max	3.492E-14	347.038	14-1	0.
14	0.25635	SLV16-NL	Max	3.206E-14	323.2417	14-1	0.25635
14	0.5127	SLV16-NL	Max	2.939E-14	300.9867	14-1	0.5127
14	0.	SLV16-NL	Min	3.492E-14	347.038	14-1	0.
14	0.25635	SLV16-NL	Min	3.206E-14	323.2417	14-1	0.25635
14	0.5127	SLV16-NL	Min	2.939E-14	300.9867	14-1	0.5127
15	0.	SLU 1-NL	Max	4.216E-14	413.8926	15-1	0.
15	0.25635	SLU 1-NL	Max	3.579E-14	360.8641	15-1	0.25635
15	0.5127	SLU 1-NL	Max	2.965E-14	309.7297	15-1	0.5127
15	0.	SLU 1-NL	Min	4.216E-14	413.8926	15-1	0.
15	0.25635	SLU 1-NL	Min	3.579E-14	360.8641	15-1	0.25635
15	0.5127	SLU 1-NL	Min	2.965E-14	309.7297	15-1	0.5127
15	0.	SLU 2-NL	Max	5.009E-14	492.86	15-1	0.
15	0.25635	SLU 2-NL	Max	4.319E-14	435.4262	15-1	0.25635
15	0.5127	SLU 2-NL	Max	3.652E-14	379.8867	15-1	0.5127
15	0.	SLU 2-NL	Min	5.009E-14	492.86	15-1	0.
15	0.25635	SLU 2-NL	Min	4.319E-14	435.4262	15-1	0.25635
15	0.5127	SLU 2-NL	Min	3.652E-14	379.8867	15-1	0.5127
15	0.	SLU 3-NL	Max	1.932E-14	188.3928	15-1	0.
15	0.25635	SLU 3-NL	Max	1.565E-14	157.8408	15-1	0.25635
15	0.5127	SLU 3-NL	Max	1.216E-14	128.7479	15-1	0.5127
15	0.	SLU 3-NL	Min	1.932E-14	188.3928	15-1	0.
15	0.25635	SLU 3-NL	Min	1.565E-14	157.8408	15-1	0.25635

Table: Element Forces - Frames, Part 2 of 2

Frame	Station	OutputCase	StepType	M2	M3	FrameElem	ElemStation
	m			KN-m	KN-m		m
15	0.5127	SLU 3-NL	Min	1.216E-14	128.7479	15-1	0.5127
15	0.	SLU 4-NL	Max	4.370E-14	429.8996	15-1	0.
15	0.25635	SLU 4-NL	Max	3.759E-14	378.9986	15-1	0.25635
15	0.5127	SLU 4-NL	Max	3.170E-14	329.9917	15-1	0.5127
15	0.	SLU 4-NL	Min	4.370E-14	429.8996	15-1	0.
15	0.25635	SLU 4-NL	Min	3.759E-14	378.9986	15-1	0.25635
15	0.5127	SLU 4-NL	Min	3.170E-14	329.9917	15-1	0.5127
15	0.	SLU 5-NL	Max	2.033E-14	199.1164	15-1	0.
15	0.25635	SLU 5-NL	Max	1.698E-14	171.2174	15-1	0.25635
15	0.5127	SLU 5-NL	Max	1.380E-14	144.7773	15-1	0.5127
15	0.	SLU 5-NL	Min	2.033E-14	199.1164	15-1	0.
15	0.25635	SLU 5-NL	Min	1.698E-14	171.2174	15-1	0.25635
15	0.5127	SLU 5-NL	Min	1.380E-14	144.7773	15-1	0.5127
15	0.	SLU 6-NL	Max	4.144E-14	405.9954	15-1	0.
15	0.25635	SLU 6-NL	Max	3.473E-14	350.1956	15-1	0.25635
15	0.5127	SLU 6-NL	Max	2.826E-14	296.2901	15-1	0.5127
15	0.	SLU 6-NL	Min	4.144E-14	405.9954	15-1	0.
15	0.25635	SLU 6-NL	Min	3.473E-14	350.1956	15-1	0.25635
15	0.5127	SLU 6-NL	Min	2.826E-14	296.2901	15-1	0.5127
15	0.	SLU 7-NL	Max	1.785E-14	172.957	15-1	0.
15	0.25635	SLU 7-NL	Max	1.386E-14	139.7684	15-1	0.25635
15	0.5127	SLU 7-NL	Max	1.005E-14	108.0392	15-1	0.5127
15	0.	SLU 7-NL	Min	1.785E-14	172.957	15-1	0.
15	0.25635	SLU 7-NL	Min	1.386E-14	139.7684	15-1	0.25635
15	0.5127	SLU 7-NL	Min	1.005E-14	108.0392	15-1	0.5127
15	0.	SLE-C-NL	Max	3.175E-14	311.658	15-1	0.
15	0.25635	SLE-C-NL	Max	2.694E-14	271.6515	15-1	0.25635
15	0.5127	SLE-C-NL	Max	2.231E-14	233.1031	15-1	0.5127
15	0.	SLE-C-NL	Min	3.175E-14	311.658	15-1	0.
15	0.25635	SLE-C-NL	Min	2.694E-14	271.6515	15-1	0.25635
15	0.5127	SLE-C-NL	Min	2.231E-14	233.1031	15-1	0.5127
15	0.	SLE-F-1-NL	Max	3.251E-14	319.4041	15-1	0.
15	0.25635	SLE-F-1-NL	Max	2.772E-14	279.5336	15-1	0.25635
15	0.5127	SLE-F-1-NL	Max	2.311E-14	241.1213	15-1	0.5127
15	0.	SLE-F-1-NL	Min	3.251E-14	319.4041	15-1	0.
15	0.25635	SLE-F-1-NL	Min	2.772E-14	279.5336	15-1	0.25635
15	0.5127	SLE-F-1-NL	Min	2.311E-14	241.1213	15-1	0.5127
15	0.	SLE-F-2-NL	Max	2.622E-14	257.2701	15-1	0.
15	0.25635	SLE-F-2-NL	Max	2.219E-14	223.7828	15-1	0.25635
15	0.5127	SLE-F-2-NL	Max	1.835E-14	191.7541	15-1	0.5127
15	0.	SLE-F-2-NL	Min	2.622E-14	257.2701	15-1	0.
15	0.25635	SLE-F-2-NL	Min	2.219E-14	223.7828	15-1	0.25635
15	0.5127	SLE-F-2-NL	Min	1.835E-14	191.7541	15-1	0.5127
15	0.	SLE-F-3-NL	Max	2.551E-14	249.8512	15-1	0.
15	0.25635	SLE-F-3-NL	Max	2.131E-14	214.8411	15-1	0.25635
15	0.5127	SLE-F-3-NL	Max	1.728E-14	181.2898	15-1	0.5127
15	0.	SLE-F-3-NL	Min	2.551E-14	249.8512	15-1	0.
15	0.25635	SLE-F-3-NL	Min	2.131E-14	214.8411	15-1	0.25635
15	0.5127	SLE-F-3-NL	Min	1.728E-14	181.2898	15-1	0.5127
15	0.	SLE-QP-NL	Max	2.725E-14	267.3685	15-1	0.
15	0.25635	SLE-QP-NL	Max	2.305E-14	232.4086	15-1	0.25635
15	0.5127	SLE-QP-NL	Max	1.903E-14	198.9076	15-1	0.5127
15	0.	SLE-QP-NL	Min	2.725E-14	267.3685	15-1	0.
15	0.25635	SLE-QP-NL	Min	2.305E-14	232.4086	15-1	0.25635

Table: Element Forces - Frames, Part 2 of 2

Frame	Station	OutputCase	StepType	M2	M3	FrameElem	ElemStation
	m			KN-m	KN-m		m
15	0.5127	SLE-QP-NL	Min	1.903E-14	198.9076	15-1	0.5127
15	0.	SLV1-NL	Max	2.274E-14	222.8638	15-1	0.
15	0.25635	SLV1-NL	Max	1.909E-14	192.4686	15-1	0.25635
15	0.5127	SLV1-NL	Max	1.562E-14	163.5735	15-1	0.5127
15	0.	SLV1-NL	Min	2.274E-14	222.8638	15-1	0.
15	0.25635	SLV1-NL	Min	1.909E-14	192.4686	15-1	0.25635
15	0.5127	SLV1-NL	Min	1.562E-14	163.5735	15-1	0.5127
15	0.	SLV2-NL	Max	2.571E-14	251.3828	15-1	0.
15	0.25635	SLV2-NL	Max	2.122E-14	213.973	15-1	0.25635
15	0.5127	SLV2-NL	Max	1.690E-14	178.0216	15-1	0.5127
15	0.	SLV2-NL	Min	2.571E-14	251.3828	15-1	0.
15	0.25635	SLV2-NL	Min	2.122E-14	213.973	15-1	0.25635
15	0.5127	SLV2-NL	Min	1.690E-14	178.0216	15-1	0.5127
15	0.	SLV3-NL	Max	2.281E-14	223.5636	15-1	0.
15	0.25635	SLV3-NL	Max	1.916E-14	193.2034	15-1	0.25635
15	0.5127	SLV3-NL	Max	1.569E-14	164.3023	15-1	0.5127
15	0.	SLV3-NL	Min	2.281E-14	223.5636	15-1	0.
15	0.25635	SLV3-NL	Min	1.916E-14	193.2034	15-1	0.25635
15	0.5127	SLV3-NL	Min	1.569E-14	164.3023	15-1	0.5127
15	0.	SLV4-NL	Max	2.579E-14	252.1004	15-1	0.
15	0.25635	SLV4-NL	Max	2.129E-14	214.7303	15-1	0.25635
15	0.5127	SLV4-NL	Max	1.698E-14	178.7777	15-1	0.5127
15	0.	SLV4-NL	Min	2.579E-14	252.1004	15-1	0.
15	0.25635	SLV4-NL	Min	2.129E-14	214.7303	15-1	0.25635
15	0.5127	SLV4-NL	Min	1.698E-14	178.7777	15-1	0.5127
15	0.	SLV5-NL	Max	2.672E-14	262.0945	15-1	0.
15	0.25635	SLV5-NL	Max	2.256E-14	227.4565	15-1	0.25635
15	0.5127	SLV5-NL	Max	1.858E-14	194.3519	15-1	0.5127
15	0.	SLV5-NL	Min	2.672E-14	262.0945	15-1	0.
15	0.25635	SLV5-NL	Min	2.256E-14	227.4565	15-1	0.25635
15	0.5127	SLV5-NL	Min	1.858E-14	194.3519	15-1	0.5127
15	0.	SLV6-NL	Max	2.771E-14	271.6583	15-1	0.
15	0.25635	SLV6-NL	Max	2.332E-14	235.1298	15-1	0.25635
15	0.5127	SLV6-NL	Max	1.912E-14	200.1221	15-1	0.5127
15	0.	SLV6-NL	Min	2.771E-14	271.6583	15-1	0.
15	0.25635	SLV6-NL	Min	2.332E-14	235.1298	15-1	0.25635
15	0.5127	SLV6-NL	Min	1.912E-14	200.1221	15-1	0.5127
15	0.	SLV7-NL	Max	2.695E-14	264.4214	15-1	0.
15	0.25635	SLV7-NL	Max	2.280E-14	229.9003	15-1	0.25635
15	0.5127	SLV7-NL	Max	1.882E-14	196.7757	15-1	0.5127
15	0.	SLV7-NL	Min	2.695E-14	264.4214	15-1	0.
15	0.25635	SLV7-NL	Min	2.280E-14	229.9003	15-1	0.25635
15	0.5127	SLV7-NL	Min	1.882E-14	196.7757	15-1	0.5127
15	0.	SLV8-NL	Max	2.794E-14	274.0546	15-1	0.
15	0.25635	SLV8-NL	Max	2.357E-14	237.6587	15-1	0.25635
15	0.5127	SLV8-NL	Max	1.937E-14	202.6468	15-1	0.5127
15	0.	SLV8-NL	Min	2.794E-14	274.0546	15-1	0.
15	0.25635	SLV8-NL	Min	2.357E-14	237.6587	15-1	0.25635
15	0.5127	SLV8-NL	Min	1.937E-14	202.6468	15-1	0.5127
15	0.	SLV9-NL	Max	2.469E-14	242.1696	15-1	0.
15	0.25635	SLV9-NL	Max	2.085E-14	210.2247	15-1	0.25635
15	0.5127	SLV9-NL	Max	1.718E-14	179.6972	15-1	0.5127
15	0.	SLV9-NL	Min	2.469E-14	242.1696	15-1	0.
15	0.25635	SLV9-NL	Min	2.085E-14	210.2247	15-1	0.25635

Table: Element Forces - Frames, Part 2 of 2

Frame	Station	OutputCase	StepType	M2	M3	FrameElem	ElemStation
	m			KN-m	KN-m		m
15	0.5127	SLV9-NL	Min	1.718E-14	179.6972	15-1	0.5127
15	0.	SLV10-NL	Max	2.832E-14	277.6245	15-1	0.
15	0.25635	SLV10-NL	Max	2.380E-14	239.9832	15-1	0.25635
15	0.5127	SLV10-NL	Max	1.946E-14	203.8011	15-1	0.5127
15	0.	SLV10-NL	Min	2.832E-14	277.6245	15-1	0.
15	0.25635	SLV10-NL	Min	2.380E-14	239.9832	15-1	0.25635
15	0.5127	SLV10-NL	Min	1.946E-14	203.8011	15-1	0.5127
15	0.	SLV11-NL	Max	2.590E-14	254.1154	15-1	0.
15	0.25635	SLV11-NL	Max	2.191E-14	220.9402	15-1	0.25635
15	0.5127	SLV11-NL	Max	1.810E-14	189.2231	15-1	0.5127
15	0.	SLV11-NL	Min	2.590E-14	254.1154	15-1	0.
15	0.25635	SLV11-NL	Min	2.191E-14	220.9402	15-1	0.25635
15	0.5127	SLV11-NL	Min	1.810E-14	189.2231	15-1	0.5127
15	0.	SLV12-NL	Max	2.954E-14	289.6716	15-1	0.
15	0.25635	SLV12-NL	Max	2.487E-14	250.8204	15-1	0.25635
15	0.5127	SLV12-NL	Max	2.039E-14	213.4693	15-1	0.5127
15	0.	SLV12-NL	Min	2.954E-14	289.6716	15-1	0.
15	0.25635	SLV12-NL	Min	2.487E-14	250.8204	15-1	0.25635
15	0.5127	SLV12-NL	Min	2.039E-14	213.4693	15-1	0.5127
15	0.	SLV13-NL	Max	2.557E-14	250.8224	15-1	0.
15	0.25635	SLV13-NL	Max	2.158E-14	217.6393	15-1	0.25635
15	0.5127	SLV13-NL	Max	1.777E-14	185.8404	15-1	0.5127
15	0.	SLV13-NL	Min	2.557E-14	250.8224	15-1	0.
15	0.25635	SLV13-NL	Min	2.158E-14	217.6393	15-1	0.25635
15	0.5127	SLV13-NL	Min	1.777E-14	185.8404	15-1	0.5127
15	0.	SLV14-NL	Max	2.671E-14	261.9781	15-1	0.
15	0.25635	SLV14-NL	Max	2.254E-14	227.2927	15-1	0.25635
15	0.5127	SLV14-NL	Max	1.854E-14	194.004	15-1	0.5127
15	0.	SLV14-NL	Min	2.671E-14	261.9781	15-1	0.
15	0.25635	SLV14-NL	Min	2.254E-14	227.2927	15-1	0.25635
15	0.5127	SLV14-NL	Min	1.854E-14	194.004	15-1	0.5127
15	0.	SLV15-NL	Max	2.954E-14	289.9587	15-1	0.
15	0.25635	SLV15-NL	Max	2.506E-14	252.7181	15-1	0.25635
15	0.5127	SLV15-NL	Max	2.077E-14	216.998	15-1	0.5127
15	0.	SLV15-NL	Min	2.954E-14	289.9587	15-1	0.
15	0.25635	SLV15-NL	Min	2.506E-14	252.7181	15-1	0.25635
15	0.5127	SLV15-NL	Min	2.077E-14	216.998	15-1	0.5127
15	0.	SLV16-NL	Max	3.068E-14	301.161	15-1	0.
15	0.25635	SLV16-NL	Max	2.603E-14	262.4753	15-1	0.25635
15	0.5127	SLV16-NL	Max	2.157E-14	225.3227	15-1	0.5127
15	0.	SLV16-NL	Min	3.068E-14	301.161	15-1	0.
15	0.25635	SLV16-NL	Min	2.603E-14	262.4753	15-1	0.25635
15	0.5127	SLV16-NL	Min	2.157E-14	225.3227	15-1	0.5127
16	0.	SLU 1-NL	Max	3.230E-14	310.2093	16-1	0.
16	0.25635	SLU 1-NL	Max	2.348E-14	236.8124	16-1	0.25635
16	0.5127	SLU 1-NL	Max	1.490E-14	165.2903	16-1	0.5127
16	0.	SLU 1-NL	Min	3.230E-14	310.2093	16-1	0.
16	0.25635	SLU 1-NL	Min	2.348E-14	236.8124	16-1	0.25635
16	0.5127	SLU 1-NL	Min	1.490E-14	165.2903	16-1	0.5127
16	0.	SLU 2-NL	Max	3.939E-14	380.3646	16-1	0.
16	0.25635	SLU 2-NL	Max	2.983E-14	300.7953	16-1	0.25635
16	0.5127	SLU 2-NL	Max	2.050E-14	223.1008	16-1	0.5127
16	0.	SLU 2-NL	Min	3.939E-14	380.3646	16-1	0.
16	0.25635	SLU 2-NL	Min	2.983E-14	300.7953	16-1	0.25635

Table: Element Forces - Frames, Part 2 of 2

Frame	Station	OutputCase	StepType	M2	M3	FrameElem	ElemStation
	m			KN-m	KN-m		m
16	0.5127	SLU 2-NL	Min	2.050E-14	223.1008	16-1	0.5127
16	0.	SLU 3-NL	Max	1.367E-14	128.9695	16-1	0.
16	0.25635	SLU 3-NL	Max	8.604E-15	86.7982	16-1	0.25635
16	0.5127	SLU 3-NL	Max	3.714E-15	46.0707	16-1	0.5127
16	0.	SLU 3-NL	Min	1.367E-14	128.9695	16-1	0.
16	0.25635	SLU 3-NL	Min	8.604E-15	86.7982	16-1	0.25635
16	0.5127	SLU 3-NL	Min	3.714E-15	46.0707	16-1	0.5127
16	0.	SLU 4-NL	Max	3.426E-14	330.2339	16-1	0.
16	0.25635	SLU 4-NL	Max	2.559E-14	258.0085	16-1	0.25635
16	0.5127	SLU 4-NL	Max	1.714E-14	187.6576	16-1	0.5127
16	0.	SLU 4-NL	Min	3.426E-14	330.2339	16-1	0.
16	0.25635	SLU 4-NL	Min	2.559E-14	258.0085	16-1	0.25635
16	0.5127	SLU 4-NL	Min	1.714E-14	187.6576	16-1	0.5127
16	0.	SLU 5-NL	Max	1.521E-14	144.8209	16-1	0.
16	0.25635	SLU 5-NL	Max	1.035E-14	104.4236	16-1	0.25635
16	0.5127	SLU 5-NL	Max	5.676E-15	65.4698	16-1	0.5127
16	0.	SLU 5-NL	Min	1.521E-14	144.8209	16-1	0.
16	0.25635	SLU 5-NL	Min	1.035E-14	104.4236	16-1	0.25635
16	0.5127	SLU 5-NL	Min	5.676E-15	65.4698	16-1	0.5127
16	0.	SLU 6-NL	Max	3.103E-14	296.9953	16-1	0.
16	0.25635	SLU 6-NL	Max	2.197E-14	221.5261	16-1	0.25635
16	0.5127	SLU 6-NL	Max	1.313E-14	147.932	16-1	0.5127
16	0.	SLU 6-NL	Min	3.103E-14	296.9953	16-1	0.
16	0.25635	SLU 6-NL	Min	2.197E-14	221.5261	16-1	0.25635
16	0.5127	SLU 6-NL	Min	1.313E-14	147.932	16-1	0.5127
16	0.	SLU 7-NL	Max	1.167E-14	108.4251	16-1	0.
16	0.25635	SLU 7-NL	Max	6.393E-15	64.5042	16-1	0.25635
16	0.5127	SLU 7-NL	Max	1.293E-15	22.0274	16-1	0.5127
16	0.	SLU 7-NL	Min	1.167E-14	108.4251	16-1	0.
16	0.25635	SLU 7-NL	Min	6.393E-15	64.5042	16-1	0.25635
16	0.5127	SLU 7-NL	Min	1.293E-15	22.0274	16-1	0.5127
16	0.	SLE-C-NL	Max	2.430E-14	233.378	16-1	0.
16	0.25635	SLE-C-NL	Max	1.765E-14	178.0102	16-1	0.25635
16	0.5127	SLE-C-NL	Max	1.118E-14	124.0853	16-1	0.5127
16	0.	SLE-C-NL	Min	2.430E-14	233.378	16-1	0.
16	0.25635	SLE-C-NL	Min	1.765E-14	178.0102	16-1	0.25635
16	0.5127	SLE-C-NL	Min	1.118E-14	124.0853	16-1	0.5127
16	0.	SLE-F-1-NL	Max	2.509E-14	241.3845	16-1	0.
16	0.25635	SLE-F-1-NL	Max	1.846E-14	186.197	16-1	0.25635
16	0.5127	SLE-F-1-NL	Max	1.201E-14	132.4523	16-1	0.5127
16	0.	SLE-F-1-NL	Min	2.509E-14	241.3845	16-1	0.
16	0.25635	SLE-F-1-NL	Min	1.846E-14	186.197	16-1	0.25635
16	0.5127	SLE-F-1-NL	Min	1.201E-14	132.4523	16-1	0.5127
16	0.	SLE-F-2-NL	Max	2.002E-14	191.9562	16-1	0.
16	0.25635	SLE-F-2-NL	Max	1.439E-14	145.1533	16-1	0.25635
16	0.5127	SLE-F-2-NL	Max	8.947E-15	99.7938	16-1	0.5127
16	0.	SLE-F-2-NL	Min	2.002E-14	191.9562	16-1	0.
16	0.25635	SLE-F-2-NL	Min	1.439E-14	145.1533	16-1	0.25635
16	0.5127	SLE-F-2-NL	Min	8.947E-15	99.7938	16-1	0.5127
16	0.	SLE-F-3-NL	Max	1.900E-14	181.5286	16-1	0.
16	0.25635	SLE-F-3-NL	Max	1.325E-14	133.6308	16-1	0.25635
16	0.5127	SLE-F-3-NL	Max	7.672E-15	87.1765	16-1	0.5127
16	0.	SLE-F-3-NL	Min	1.900E-14	181.5286	16-1	0.
16	0.25635	SLE-F-3-NL	Min	1.325E-14	133.6308	16-1	0.25635

Table: Element Forces - Frames, Part 2 of 2

Frame	Station	OutputCase	StepType	M2	M3	FrameElem	ElemStation
	m			KN-m	KN-m		m
16	0.5127	SLE-F-3-NL	Min	7.672E-15	87.1765	16-1	0.5127
16	0.	SLE-QP-NL	Max	2.076E-14	199.128	16-1	0.
16	0.25635	SLE-QP-NL	Max	1.495E-14	150.7811	16-1	0.25635
16	0.5127	SLE-QP-NL	Max	9.320E-15	103.8775	16-1	0.5127
16	0.	SLE-QP-NL	Min	2.076E-14	199.128	16-1	0.
16	0.25635	SLE-QP-NL	Min	1.495E-14	150.7811	16-1	0.25635
16	0.5127	SLE-QP-NL	Min	9.320E-15	103.8775	16-1	0.5127
16	0.	SLV1-NL	Max	1.714E-14	163.6364	16-1	0.
16	0.25635	SLV1-NL	Max	1.191E-14	120.0832	16-1	0.25635
16	0.5127	SLV1-NL	Max	6.856E-15	78.0228	16-1	0.5127
16	0.	SLV1-NL	Min	1.714E-14	163.6364	16-1	0.
16	0.25635	SLV1-NL	Min	1.191E-14	120.0832	16-1	0.25635
16	0.5127	SLV1-NL	Min	6.856E-15	78.0228	16-1	0.5127
16	0.	SLV2-NL	Max	1.874E-14	178.4066	16-1	0.
16	0.25635	SLV2-NL	Max	1.271E-14	128.2099	16-1	0.25635
16	0.5127	SLV2-NL	Max	6.857E-15	79.4478	16-1	0.5127
16	0.	SLV2-NL	Min	1.874E-14	178.4066	16-1	0.
16	0.25635	SLV2-NL	Min	1.271E-14	128.2099	16-1	0.25635
16	0.5127	SLV2-NL	Min	6.857E-15	79.4478	16-1	0.5127
16	0.	SLV3-NL	Max	1.721E-14	164.3638	16-1	0.
16	0.25635	SLV3-NL	Max	1.198E-14	120.8529	16-1	0.25635
16	0.5127	SLV3-NL	Max	6.933E-15	78.7943	16-1	0.5127
16	0.	SLV3-NL	Min	1.721E-14	164.3638	16-1	0.
16	0.25635	SLV3-NL	Min	1.198E-14	120.8529	16-1	0.25635
16	0.5127	SLV3-NL	Min	6.933E-15	78.7943	16-1	0.5127
16	0.	SLV4-NL	Max	1.882E-14	179.1595	16-1	0.
16	0.25635	SLV4-NL	Max	1.279E-14	129.009	16-1	0.25635
16	0.5127	SLV4-NL	Max	6.937E-15	80.2524	16-1	0.5127
16	0.	SLV4-NL	Min	1.882E-14	179.1595	16-1	0.
16	0.25635	SLV4-NL	Min	1.279E-14	129.009	16-1	0.25635
16	0.5127	SLV4-NL	Min	6.937E-15	80.2524	16-1	0.5127
16	0.	SLV5-NL	Max	2.030E-14	194.5449	16-1	0.
16	0.25635	SLV5-NL	Max	1.450E-14	146.2595	16-1	0.25635
16	0.5127	SLV5-NL	Max	8.887E-15	99.4939	16-1	0.5127
16	0.	SLV5-NL	Min	2.030E-14	194.5449	16-1	0.
16	0.25635	SLV5-NL	Min	1.450E-14	146.2595	16-1	0.25635
16	0.5127	SLV5-NL	Min	8.887E-15	99.4939	16-1	0.5127
16	0.	SLV6-NL	Max	2.092E-14	200.3966	16-1	0.
16	0.25635	SLV6-NL	Max	1.490E-14	150.2742	16-1	0.25635
16	0.5127	SLV6-NL	Max	9.063E-15	101.654	16-1	0.5127
16	0.	SLV6-NL	Min	2.092E-14	200.3966	16-1	0.
16	0.25635	SLV6-NL	Min	1.490E-14	150.2742	16-1	0.25635
16	0.5127	SLV6-NL	Min	9.063E-15	101.654	16-1	0.5127
16	0.	SLV7-NL	Max	2.054E-14	196.9619	16-1	0.
16	0.25635	SLV7-NL	Max	1.476E-14	148.8181	16-1	0.25635
16	0.5127	SLV7-NL	Max	9.142E-15	102.0587	16-1	0.5127
16	0.	SLV7-NL	Min	2.054E-14	196.9619	16-1	0.
16	0.25635	SLV7-NL	Min	1.476E-14	148.8181	16-1	0.25635
16	0.5127	SLV7-NL	Min	9.142E-15	102.0587	16-1	0.5127
16	0.	SLV8-NL	Max	2.117E-14	202.9125	16-1	0.
16	0.25635	SLV8-NL	Max	1.517E-14	152.9437	16-1	0.25635
16	0.5127	SLV8-NL	Max	9.330E-15	104.3418	16-1	0.5127
16	0.	SLV8-NL	Min	2.117E-14	202.9125	16-1	0.
16	0.25635	SLV8-NL	Min	1.517E-14	152.9437	16-1	0.25635

Table: Element Forces - Frames, Part 2 of 2

Frame	Station	OutputCase	StepType	M2	M3	FrameElem	ElemStation
	m			KN-m	KN-m		m
16	0.5127	SLV8-NL	Min	9.330E-15	104.3418	16-1	0.5127
16	0.	SLV9-NL	Max	1.878E-14	179.8842	16-1	0.
16	0.25635	SLV9-NL	Max	1.336E-14	134.7426	16-1	0.25635
16	0.5127	SLV9-NL	Max	8.108E-15	90.9949	16-1	0.5127
16	0.	SLV9-NL	Min	1.878E-14	179.8842	16-1	0.
16	0.25635	SLV9-NL	Min	1.336E-14	134.7426	16-1	0.25635
16	0.5127	SLV9-NL	Min	8.108E-15	90.9949	16-1	0.5127
16	0.	SLV10-NL	Max	2.131E-14	204.0582	16-1	0.
16	0.25635	SLV10-NL	Max	1.516E-14	152.9282	16-1	0.25635
16	0.5127	SLV10-NL	Max	9.199E-15	103.2504	16-1	0.5127
16	0.	SLV10-NL	Min	2.131E-14	204.0582	16-1	0.
16	0.25635	SLV10-NL	Min	1.516E-14	152.9282	16-1	0.25635
16	0.5127	SLV10-NL	Min	9.199E-15	103.2504	16-1	0.5127
16	0.	SLV11-NL	Max	1.977E-14	189.4221	16-1	0.
16	0.25635	SLV11-NL	Max	1.414E-14	142.581	16-1	0.25635
16	0.5127	SLV11-NL	Max	8.686E-15	97.1742	16-1	0.5127
16	0.	SLV11-NL	Min	1.977E-14	189.4221	16-1	0.
16	0.25635	SLV11-NL	Min	1.414E-14	142.581	16-1	0.25635
16	0.5127	SLV11-NL	Min	8.686E-15	97.1742	16-1	0.5127
16	0.	SLV12-NL	Max	2.230E-14	213.7387	16-1	0.
16	0.25635	SLV12-NL	Max	1.596E-14	160.9242	16-1	0.25635
16	0.5127	SLV12-NL	Max	9.795E-15	109.6024	16-1	0.5127
16	0.	SLV12-NL	Min	2.230E-14	213.7387	16-1	0.
16	0.25635	SLV12-NL	Min	1.596E-14	160.9242	16-1	0.25635
16	0.5127	SLV12-NL	Min	9.795E-15	109.6024	16-1	0.5127
16	0.	SLV13-NL	Max	1.942E-14	186.0469	16-1	0.
16	0.25635	SLV13-NL	Max	1.387E-14	139.9275	16-1	0.25635
16	0.5127	SLV13-NL	Max	8.501E-15	95.1751	16-1	0.5127
16	0.	SLV13-NL	Min	1.942E-14	186.0469	16-1	0.
16	0.25635	SLV13-NL	Min	1.387E-14	139.9275	16-1	0.25635
16	0.5127	SLV13-NL	Min	8.501E-15	95.1751	16-1	0.5127
16	0.	SLV14-NL	Max	2.026E-14	194.219	16-1	0.
16	0.25635	SLV14-NL	Max	1.452E-14	146.4678	16-1	0.25635
16	0.5127	SLV14-NL	Max	8.956E-15	100.1012	16-1	0.5127
16	0.	SLV14-NL	Min	2.026E-14	194.219	16-1	0.
16	0.25635	SLV14-NL	Min	1.452E-14	146.4678	16-1	0.25635
16	0.5127	SLV14-NL	Min	8.956E-15	100.1012	16-1	0.5127
16	0.	SLV15-NL	Max	2.263E-14	217.2452	16-1	0.
16	0.25635	SLV15-NL	Max	1.641E-14	165.5172	16-1	0.25635
16	0.5127	SLV15-NL	Max	1.038E-14	115.2912	16-1	0.5127
16	0.	SLV15-NL	Min	2.263E-14	217.2452	16-1	0.
16	0.25635	SLV15-NL	Min	1.641E-14	165.5172	16-1	0.25635
16	0.5127	SLV15-NL	Min	1.038E-14	115.2912	16-1	0.5127
16	0.	SLV16-NL	Max	2.349E-14	225.5789	16-1	0.
16	0.25635	SLV16-NL	Max	1.708E-14	172.2693	16-1	0.25635
16	0.5127	SLV16-NL	Max	1.086E-14	120.4793	16-1	0.5127
16	0.	SLV16-NL	Min	2.349E-14	225.5789	16-1	0.
16	0.25635	SLV16-NL	Min	1.708E-14	172.2693	16-1	0.25635
16	0.5127	SLV16-NL	Min	1.086E-14	120.4793	16-1	0.5127
17	0.	SLU 1-NL	Max	1.840E-14	165.9223	17-1	0.
17	0.25635	SLU 1-NL	Max	7.197E-15	72.6273	17-1	0.25635
17	0.5127	SLU 1-NL	Max	-3.784E-15	-18.8184	17-1	0.5127
17	0.	SLU 1-NL	Min	1.840E-14	165.9223	17-1	0.
17	0.25635	SLU 1-NL	Min	7.197E-15	72.6273	17-1	0.25635

Table: Element Forces - Frames, Part 2 of 2

Frame	Station	OutputCase	StepType	M2	M3	FrameElem	ElemStation
	m			KN-m	KN-m		m
17	0.5127	SLU 1-NL	Min	-3.784E-15	-18.8184	17-1	0.5127
17	0.	SLU 2-NL	Max	2.431E-14	223.7312	17-1	0.
17	0.25635	SLU 2-NL	Max	1.214E-14	122.4931	17-1	0.25635
17	0.5127	SLU 2-NL	Max	2.084E-16	23.1039	17-1	0.5127
17	0.	SLU 2-NL	Min	2.431E-14	223.7312	17-1	0.
17	0.25635	SLU 2-NL	Min	1.214E-14	122.4931	17-1	0.25635
17	0.5127	SLU 2-NL	Min	2.084E-16	23.1039	17-1	0.5127
17	0.	SLU 3-NL	Max	5.713E-15	46.3621	17-1	0.
17	0.25635	SLU 3-NL	Max	-7.115E-16	-7.1172	17-1	0.25635
17	0.5127	SLU 3-NL	Max	-6.962E-15	-59.173	17-1	0.5127
17	0.	SLU 3-NL	Min	5.713E-15	46.3621	17-1	0.
17	0.25635	SLU 3-NL	Min	-7.115E-16	-7.1172	17-1	0.25635
17	0.5127	SLU 3-NL	Min	-6.962E-15	-59.173	17-1	0.5127
17	0.	SLU 4-NL	Max	2.060E-14	188.0658	17-1	0.
17	0.25635	SLU 4-NL	Max	9.388E-15	94.7173	17-1	0.25635
17	0.5127	SLU 4-NL	Max	-1.599E-15	3.2178	17-1	0.5127
17	0.	SLU 4-NL	Min	2.060E-14	188.0658	17-1	0.
17	0.25635	SLU 4-NL	Min	9.388E-15	94.7173	17-1	0.25635
17	0.5127	SLU 4-NL	Min	-1.599E-15	3.2178	17-1	0.5127
17	0.	SLU 5-NL	Max	7.608E-15	65.5926	17-1	0.
17	0.25635	SLU 5-NL	Max	1.256E-15	12.7218	17-1	0.25635
17	0.5127	SLU 5-NL	Max	-4.921E-15	-38.7259	17-1	0.5127
17	0.	SLU 5-NL	Min	7.608E-15	65.5926	17-1	0.
17	0.25635	SLU 5-NL	Min	1.256E-15	12.7218	17-1	0.25635
17	0.5127	SLU 5-NL	Min	-4.921E-15	-38.7259	17-1	0.5127
17	0.	SLU 6-NL	Max	1.673E-14	148.7723	17-1	0.
17	0.25635	SLU 6-NL	Max	5.386E-15	54.3733	17-1	0.25635
17	0.5127	SLU 6-NL	Max	-5.727E-15	-38.1761	17-1	0.5127
17	0.	SLU 6-NL	Min	1.673E-14	148.7723	17-1	0.
17	0.25635	SLU 6-NL	Min	5.386E-15	54.3733	17-1	0.25635
17	0.5127	SLU 6-NL	Min	-5.727E-15	-38.1761	17-1	0.5127
17	0.	SLU 7-NL	Max	3.355E-15	22.4697	17-1	0.
17	0.25635	SLU 7-NL	Max	-3.139E-15	-31.5844	17-1	0.25635
17	0.5127	SLU 7-NL	Max	-9.458E-15	-84.2148	17-1	0.5127
17	0.	SLU 7-NL	Min	3.355E-15	22.4697	17-1	0.
17	0.25635	SLU 7-NL	Min	-3.139E-15	-31.5844	17-1	0.25635
17	0.5127	SLU 7-NL	Min	-9.458E-15	-84.2148	17-1	0.5127
17	0.	SLE-C-NL	Max	1.381E-14	124.4475	17-1	0.
17	0.25635	SLE-C-NL	Max	5.358E-15	54.0724	17-1	0.25635
17	0.5127	SLE-C-NL	Max	-2.922E-15	-14.88	17-1	0.5127
17	0.	SLE-C-NL	Min	1.381E-14	124.4475	17-1	0.
17	0.25635	SLE-C-NL	Min	5.358E-15	54.0724	17-1	0.25635
17	0.5127	SLE-C-NL	Min	-2.922E-15	-14.88	17-1	0.5127
17	0.	SLE-F-1-NL	Max	1.464E-14	132.7992	17-1	0.
17	0.25635	SLE-F-1-NL	Max	6.208E-15	62.6385	17-1	0.25635
17	0.5127	SLE-F-1-NL	Max	-2.046E-15	-6.0997	17-1	0.5127
17	0.	SLE-F-1-NL	Min	1.464E-14	132.7992	17-1	0.
17	0.25635	SLE-F-1-NL	Min	6.208E-15	62.6385	17-1	0.25635
17	0.5127	SLE-F-1-NL	Min	-2.046E-15	-6.0997	17-1	0.5127
17	0.	SLE-F-2-NL	Max	1.117E-14	100.0682	17-1	0.
17	0.25635	SLE-F-2-NL	Max	3.981E-15	40.1891	17-1	0.25635
17	0.5127	SLE-F-2-NL	Max	-3.038E-15	-18.2671	17-1	0.5127
17	0.	SLE-F-2-NL	Min	1.117E-14	100.0682	17-1	0.
17	0.25635	SLE-F-2-NL	Min	3.981E-15	40.1891	17-1	0.25635

Table: Element Forces - Frames, Part 2 of 2

Frame	Station	OutputCase	StepType	M2	M3	FrameElem	ElemStation
	m			KN-m	KN-m		m
17	0.5127	SLE-F-2-NL	Min	-3.038E-15	-18.2671	17-1	0.5127
17	0.	SLE-F-3-NL	Max	9.937E-15	87.4826	17-1	0.
17	0.25635	SLE-F-3-NL	Max	2.680E-15	27.0758	17-1	0.25635
17	0.5127	SLE-F-3-NL	Max	-4.402E-15	-31.908	17-1	0.5127
17	0.	SLE-F-3-NL	Min	9.937E-15	87.4826	17-1	0.
17	0.25635	SLE-F-3-NL	Min	2.680E-15	27.0758	17-1	0.25635
17	0.5127	SLE-F-3-NL	Min	-4.402E-15	-31.908	17-1	0.5127
17	0.	SLE-QP-NL	Max	1.161E-14	104.1678	17-1	0.
17	0.25635	SLE-QP-NL	Max	4.234E-15	42.7418	17-1	0.25635
17	0.5127	SLE-QP-NL	Max	-2.971E-15	-17.2612	17-1	0.5127
17	0.	SLE-QP-NL	Min	1.161E-14	104.1678	17-1	0.
17	0.25635	SLE-QP-NL	Min	4.234E-15	42.7418	17-1	0.25635
17	0.5127	SLE-QP-NL	Min	-2.971E-15	-17.2612	17-1	0.5127
17	0.	SLV1-NL	Max	8.935E-15	78.1688	17-1	0.
17	0.25635	SLV1-NL	Max	2.129E-15	21.5246	17-1	0.25635
17	0.5127	SLV1-NL	Max	-4.494E-15	-33.6392	17-1	0.5127
17	0.	SLV1-NL	Min	8.935E-15	78.1688	17-1	0.
17	0.25635	SLV1-NL	Min	2.129E-15	21.5246	17-1	0.25635
17	0.5127	SLV1-NL	Min	-4.494E-15	-33.6392	17-1	0.5127
17	0.	SLV2-NL	Max	9.227E-15	79.8934	17-1	0.
17	0.25635	SLV2-NL	Max	1.728E-15	17.4751	17-1	0.25635
17	0.5127	SLV2-NL	Max	-5.598E-15	-43.5374	17-1	0.5127
17	0.	SLV2-NL	Min	9.227E-15	79.8934	17-1	0.
17	0.25635	SLV2-NL	Min	1.728E-15	17.4751	17-1	0.25635
17	0.5127	SLV2-NL	Min	-5.598E-15	-43.5374	17-1	0.5127
17	0.	SLV3-NL	Max	9.010E-15	78.9382	17-1	0.
17	0.25635	SLV3-NL	Max	2.211E-15	22.3442	17-1	0.25635
17	0.5127	SLV3-NL	Max	-4.412E-15	-32.8095	17-1	0.5127
17	0.	SLV3-NL	Min	9.010E-15	78.9382	17-1	0.
17	0.25635	SLV3-NL	Min	2.211E-15	22.3442	17-1	0.25635
17	0.5127	SLV3-NL	Min	-4.412E-15	-32.8095	17-1	0.5127
17	0.	SLV4-NL	Max	9.305E-15	80.6942	17-1	0.
17	0.25635	SLV4-NL	Max	1.813E-15	18.3284	17-1	0.25635
17	0.5127	SLV4-NL	Max	-5.512E-15	-42.6715	17-1	0.5127
17	0.	SLV4-NL	Min	9.305E-15	80.6942	17-1	0.
17	0.25635	SLV4-NL	Min	1.813E-15	18.3284	17-1	0.25635
17	0.5127	SLV4-NL	Min	-5.512E-15	-42.6715	17-1	0.5127
17	0.	SLV5-NL	Max	1.118E-14	99.7642	17-1	0.
17	0.25635	SLV5-NL	Max	3.772E-15	38.0826	17-1	0.25635
17	0.5127	SLV5-NL	Max	-3.455E-15	-22.0983	17-1	0.5127
17	0.	SLV5-NL	Min	1.118E-14	99.7642	17-1	0.
17	0.25635	SLV5-NL	Min	3.772E-15	38.0826	17-1	0.25635
17	0.5127	SLV5-NL	Min	-3.455E-15	-22.0983	17-1	0.5127
17	0.	SLV6-NL	Max	1.144E-14	101.9998	17-1	0.
17	0.25635	SLV6-NL	Max	3.830E-15	38.6653	17-1	0.25635
17	0.5127	SLV6-NL	Max	-3.598E-15	-23.191	17-1	0.5127
17	0.	SLV6-NL	Min	1.144E-14	101.9998	17-1	0.
17	0.25635	SLV6-NL	Min	3.830E-15	38.6653	17-1	0.25635
17	0.5127	SLV6-NL	Min	-3.598E-15	-23.191	17-1	0.5127
17	0.	SLV7-NL	Max	1.143E-14	102.3198	17-1	0.
17	0.25635	SLV7-NL	Max	4.042E-15	40.8057	17-1	0.25635
17	0.5127	SLV7-NL	Max	-3.180E-15	-19.3409	17-1	0.5127
17	0.	SLV7-NL	Min	1.143E-14	102.3198	17-1	0.
17	0.25635	SLV7-NL	Min	4.042E-15	40.8057	17-1	0.25635

Table: Element Forces - Frames, Part 2 of 2

Frame	Station	OutputCase	StepType	M2	M3	FrameElem	ElemStation
	m			KN-m	KN-m		m
17	0.5127	SLV7-NL	Min	-3.180E-15	-19.3409	17-1	0.5127
17	0.	SLV8-NL	Max	1.170E-14	104.6766	17-1	0.
17	0.25635	SLV8-NL	Max	4.113E-15	41.5168	17-1	0.25635
17	0.5127	SLV8-NL	Max	-3.310E-15	-20.2978	17-1	0.5127
17	0.	SLV8-NL	Min	1.170E-14	104.6766	17-1	0.
17	0.25635	SLV8-NL	Min	4.113E-15	41.5168	17-1	0.25635
17	0.5127	SLV8-NL	Min	-3.310E-15	-20.2978	17-1	0.5127
17	0.	SLV9-NL	Max	1.027E-14	91.2572	17-1	0.
17	0.25635	SLV9-NL	Max	3.277E-15	33.0852	17-1	0.25635
17	0.5127	SLV9-NL	Max	-3.545E-15	-23.7211	17-1	0.5127
17	0.	SLV9-NL	Min	1.027E-14	91.2572	17-1	0.
17	0.25635	SLV9-NL	Min	3.277E-15	33.0852	17-1	0.25635
17	0.5127	SLV9-NL	Min	-3.545E-15	-23.7211	17-1	0.5127
17	0.	SLV10-NL	Max	1.161E-14	103.5747	17-1	0.
17	0.25635	SLV10-NL	Max	3.904E-15	39.411	17-1	0.25635
17	0.5127	SLV10-NL	Max	-3.628E-15	-23.3123	17-1	0.5127
17	0.	SLV10-NL	Min	1.161E-14	103.5747	17-1	0.
17	0.25635	SLV10-NL	Min	3.904E-15	39.411	17-1	0.25635
17	0.5127	SLV10-NL	Min	-3.628E-15	-23.3123	17-1	0.5127
17	0.	SLV11-NL	Max	1.092E-14	97.4525	17-1	0.
17	0.25635	SLV11-NL	Max	3.677E-15	37.121	17-1	0.25635
17	0.5127	SLV11-NL	Max	-3.399E-15	-21.805	17-1	0.5127
17	0.	SLV11-NL	Min	1.092E-14	97.4525	17-1	0.
17	0.25635	SLV11-NL	Min	3.677E-15	37.121	17-1	0.25635
17	0.5127	SLV11-NL	Min	-3.399E-15	-21.805	17-1	0.5127
17	0.	SLV12-NL	Max	1.229E-14	109.943	17-1	0.
17	0.25635	SLV12-NL	Max	4.322E-15	43.6275	17-1	0.25635
17	0.5127	SLV12-NL	Max	-3.464E-15	-21.2077	17-1	0.5127
17	0.	SLV12-NL	Min	1.229E-14	109.943	17-1	0.
17	0.25635	SLV12-NL	Min	4.322E-15	43.6275	17-1	0.25635
17	0.5127	SLV12-NL	Min	-3.464E-15	-21.2077	17-1	0.5127
17	0.	SLV13-NL	Max	1.069E-14	95.4494	17-1	0.
17	0.25635	SLV13-NL	Max	3.631E-15	36.6614	17-1	0.25635
17	0.5127	SLV13-NL	Max	-3.266E-15	-20.7816	17-1	0.5127
17	0.	SLV13-NL	Min	1.069E-14	95.4494	17-1	0.
17	0.25635	SLV13-NL	Min	3.631E-15	36.6614	17-1	0.25635
17	0.5127	SLV13-NL	Min	-3.266E-15	-20.7816	17-1	0.5127
17	0.	SLV14-NL	Max	1.122E-14	100.3822	17-1	0.
17	0.25635	SLV14-NL	Max	3.953E-15	39.9034	17-1	0.25635
17	0.5127	SLV14-NL	Max	-3.145E-15	-19.2079	17-1	0.5127
17	0.	SLV14-NL	Min	1.122E-14	100.3822	17-1	0.
17	0.25635	SLV14-NL	Min	3.953E-15	39.9034	17-1	0.25635
17	0.5127	SLV14-NL	Min	-3.145E-15	-19.2079	17-1	0.5127
17	0.	SLV15-NL	Max	1.284E-14	115.6192	17-1	0.
17	0.25635	SLV15-NL	Max	4.924E-15	49.701	17-1	0.25635
17	0.5127	SLV15-NL	Max	-2.814E-15	-14.739	17-1	0.5127
17	0.	SLV15-NL	Min	1.284E-14	115.6192	17-1	0.
17	0.25635	SLV15-NL	Min	4.924E-15	49.701	17-1	0.25635
17	0.5127	SLV15-NL	Min	-2.814E-15	-14.739	17-1	0.5127
17	0.	SLV16-NL	Max	1.339E-14	120.8145	17-1	0.
17	0.25635	SLV16-NL	Max	5.276E-15	53.2452	17-1	0.25635
17	0.5127	SLV16-NL	Max	-2.658E-15	-12.8234	17-1	0.5127
17	0.	SLV16-NL	Min	1.339E-14	120.8145	17-1	0.
17	0.25635	SLV16-NL	Min	5.276E-15	53.2452	17-1	0.25635

Table: Element Forces - Frames, Part 2 of 2

Frame	Station	OutputCase	StepType	M2	M3	FrameElem	ElemStation
	m			KN-m	KN-m		m
17	0.5127	SLV16-NL	Min	-2.658E-15	-12.8234	17-1	0.5127
18	0.	SLU 1-NL	Max	5.596E-16	-18.041	18-1	0.
18	0.25635	SLU 1-NL	Max	-1.296E-14	-130.6126	18-1	0.25635
18	0.5127	SLU 1-NL	Max	-2.626E-14	-241.3665	18-1	0.5127
18	0.	SLU 1-NL	Min	5.596E-16	-18.041	18-1	0.
18	0.25635	SLU 1-NL	Min	-1.296E-14	-130.6126	18-1	0.25635
18	0.5127	SLU 1-NL	Min	-2.626E-14	-241.3665	18-1	0.5127
18	0.	SLU 2-NL	Max	4.921E-15	23.8803	18-1	0.
18	0.25635	SLU 2-NL	Max	-9.769E-15	-98.4076	18-1	0.25635
18	0.5127	SLU 2-NL	Max	-2.424E-14	-218.8787	18-1	0.5127
18	0.	SLU 2-NL	Min	4.921E-15	23.8803	18-1	0.
18	0.25635	SLU 2-NL	Min	-9.769E-15	-98.4076	18-1	0.25635
18	0.5127	SLU 2-NL	Min	-2.424E-14	-218.8787	18-1	0.5127
18	0.	SLU 3-NL	Max	-4.492E-15	-58.8153	18-1	0.
18	0.25635	SLU 3-NL	Max	-1.223E-14	-123.1937	18-1	0.25635
18	0.5127	SLU 3-NL	Max	-1.979E-14	-186.1737	18-1	0.5127
18	0.	SLU 3-NL	Min	-4.492E-15	-58.8153	18-1	0.
18	0.25635	SLU 3-NL	Min	-1.223E-14	-123.1937	18-1	0.25635
18	0.5127	SLU 3-NL	Min	-1.979E-14	-186.1737	18-1	0.5127
18	0.	SLU 4-NL	Max	2.757E-15	3.7895	18-1	0.
18	0.25635	SLU 4-NL	Max	-1.095E-14	-110.3229	18-1	0.25635
18	0.5127	SLU 4-NL	Max	-2.444E-14	-222.6181	18-1	0.5127
18	0.	SLU 4-NL	Min	2.757E-15	3.7895	18-1	0.
18	0.25635	SLU 4-NL	Min	-1.095E-14	-110.3229	18-1	0.25635
18	0.5127	SLU 4-NL	Min	-2.444E-14	-222.6181	18-1	0.5127
18	0.	SLU 5-NL	Max	-2.461E-15	-38.5242	18-1	0.
18	0.25635	SLU 5-NL	Max	-1.030E-14	-103.7392	18-1	0.25635
18	0.5127	SLU 5-NL	Max	-1.796E-14	-167.5563	18-1	0.5127
18	0.	SLU 5-NL	Min	-2.461E-15	-38.5242	18-1	0.
18	0.25635	SLU 5-NL	Min	-1.030E-14	-103.7392	18-1	0.25635
18	0.5127	SLU 5-NL	Min	-1.796E-14	-167.5563	18-1	0.5127
18	0.	SLU 6-NL	Max	-1.345E-15	-37.2117	18-1	0.
18	0.25635	SLU 6-NL	Max	-1.485E-14	-149.6555	18-1	0.25635
18	0.5127	SLU 6-NL	Max	-2.814E-14	-260.2814	18-1	0.5127
18	0.	SLU 6-NL	Min	-1.345E-15	-37.2117	18-1	0.
18	0.25635	SLU 6-NL	Min	-1.485E-14	-149.6555	18-1	0.25635
18	0.5127	SLU 6-NL	Min	-2.814E-14	-260.2814	18-1	0.5127
18	0.	SLU 7-NL	Max	-6.981E-15	-83.7228	18-1	0.
18	0.25635	SLU 7-NL	Max	-1.461E-14	-147.2197	18-1	0.25635
18	0.5127	SLU 7-NL	Max	-2.207E-14	-209.318	18-1	0.5127
18	0.	SLU 7-NL	Min	-6.981E-15	-83.7228	18-1	0.
18	0.25635	SLU 7-NL	Min	-1.461E-14	-147.2197	18-1	0.25635
18	0.5127	SLU 7-NL	Min	-2.207E-14	-209.318	18-1	0.5127
18	0.	SLE-C-NL	Max	3.401E-16	-14.4345	18-1	0.
18	0.25635	SLE-C-NL	Max	-9.860E-15	-99.3491	18-1	0.25635
18	0.5127	SLE-C-NL	Max	-1.989E-14	-182.866	18-1	0.5127
18	0.	SLE-C-NL	Min	3.401E-16	-14.4345	18-1	0.
18	0.25635	SLE-C-NL	Min	-9.860E-15	-99.3491	18-1	0.25635
18	0.5127	SLE-C-NL	Min	-1.989E-14	-182.866	18-1	0.5127
18	0.	SLE-F-1-NL	Max	1.204E-15	-5.6728	18-1	0.
18	0.25635	SLE-F-1-NL	Max	-8.968E-15	-90.352	18-1	0.25635
18	0.5127	SLE-F-1-NL	Max	-1.897E-14	-173.6337	18-1	0.5127
18	0.	SLE-F-1-NL	Min	1.204E-15	-5.6728	18-1	0.
18	0.25635	SLE-F-1-NL	Min	-8.968E-15	-90.352	18-1	0.25635

Table: Element Forces - Frames, Part 2 of 2

Frame	Station	OutputCase	StepType	M2	M3	FrameElem	ElemStation
	m			KN-m	KN-m		m
18	0.5127	SLE-F-1-NL	Min	-1.897E-14	-173.6337	18-1	0.5127
18	0.	SLE-F-2-NL	Max	-2.631E-16	-17.923	18-1	0.
18	0.25635	SLE-F-2-NL	Max	-8.987E-15	-90.5388	18-1	0.25635
18	0.5127	SLE-F-2-NL	Max	-1.754E-14	-161.757	18-1	0.5127
18	0.	SLE-F-2-NL	Min	-2.631E-16	-17.923	18-1	0.
18	0.25635	SLE-F-2-NL	Min	-8.987E-15	-90.5388	18-1	0.25635
18	0.5127	SLE-F-2-NL	Min	-1.754E-14	-161.757	18-1	0.5127
18	0.	SLE-F-3-NL	Max	-1.617E-15	-31.5385	18-1	0.
18	0.25635	SLE-F-3-NL	Max	-1.032E-14	-103.9785	18-1	0.25635
18	0.5127	SLE-F-3-NL	Max	-1.885E-14	-175.0207	18-1	0.5127
18	0.	SLE-F-3-NL	Min	-1.617E-15	-31.5385	18-1	0.
18	0.25635	SLE-F-3-NL	Min	-1.032E-14	-103.9785	18-1	0.25635
18	0.5127	SLE-F-3-NL	Min	-1.885E-14	-175.0207	18-1	0.5127
18	0.	SLE-QP-NL	Max	-1.311E-16	-16.9042	18-1	0.
18	0.25635	SLE-QP-NL	Max	-9.033E-15	-91.0023	18-1	0.25635
18	0.5127	SLE-QP-NL	Max	-1.776E-14	-163.7027	18-1	0.5127
18	0.	SLE-QP-NL	Min	-1.311E-16	-16.9042	18-1	0.
18	0.25635	SLE-QP-NL	Min	-9.033E-15	-91.0023	18-1	0.25635
18	0.5127	SLE-QP-NL	Min	-1.776E-14	-163.7027	18-1	0.5127
18	0.	SLV1-NL	Max	-1.863E-15	-33.4103	18-1	0.
18	0.25635	SLV1-NL	Max	-1.022E-14	-102.9716	18-1	0.25635
18	0.5127	SLV1-NL	Max	-1.840E-14	-171.07	18-1	0.5127
18	0.	SLV1-NL	Min	-1.863E-15	-33.4103	18-1	0.
18	0.25635	SLV1-NL	Min	-1.022E-14	-102.9716	18-1	0.25635
18	0.5127	SLV1-NL	Min	-1.840E-14	-171.07	18-1	0.5127
18	0.	SLV2-NL	Max	-2.726E-15	-43.0377	18-1	0.
18	0.25635	SLV2-NL	Max	-1.161E-14	-117.0161	18-1	0.25635
18	0.5127	SLV2-NL	Max	-2.033E-14	-189.6224	18-1	0.5127
18	0.	SLV2-NL	Min	-2.726E-15	-43.0377	18-1	0.
18	0.25635	SLV2-NL	Min	-1.161E-14	-117.0161	18-1	0.25635
18	0.5127	SLV2-NL	Min	-2.033E-14	-189.6224	18-1	0.5127
18	0.	SLV3-NL	Max	-1.783E-15	-32.5835	18-1	0.
18	0.25635	SLV3-NL	Max	-1.013E-14	-102.0863	18-1	0.25635
18	0.5127	SLV3-NL	Max	-1.831E-14	-170.1654	18-1	0.5127
18	0.	SLV3-NL	Min	-1.783E-15	-32.5835	18-1	0.
18	0.25635	SLV3-NL	Min	-1.013E-14	-102.0863	18-1	0.25635
18	0.5127	SLV3-NL	Min	-1.831E-14	-170.1654	18-1	0.5127
18	0.	SLV4-NL	Max	-2.642E-15	-42.1763	18-1	0.
18	0.25635	SLV4-NL	Max	-1.152E-14	-116.0956	18-1	0.25635
18	0.5127	SLV4-NL	Max	-2.024E-14	-188.6821	18-1	0.5127
18	0.	SLV4-NL	Min	-2.642E-15	-42.1763	18-1	0.
18	0.25635	SLV4-NL	Min	-1.152E-14	-116.0956	18-1	0.25635
18	0.5127	SLV4-NL	Min	-2.024E-14	-188.6821	18-1	0.5127
18	0.	SLV5-NL	Max	-5.992E-16	-21.7533	18-1	0.
18	0.25635	SLV5-NL	Max	-9.576E-15	-96.4771	18-1	0.25635
18	0.5127	SLV5-NL	Max	-1.837E-14	-169.7242	18-1	0.5127
18	0.	SLV5-NL	Min	-5.992E-16	-21.7533	18-1	0.
18	0.25635	SLV5-NL	Min	-9.576E-15	-96.4771	18-1	0.25635
18	0.5127	SLV5-NL	Min	-1.837E-14	-169.7242	18-1	0.5127
18	0.	SLV6-NL	Max	-6.728E-16	-22.7781	18-1	0.
18	0.25635	SLV6-NL	Max	-9.810E-15	-98.843	18-1	0.25635
18	0.5127	SLV6-NL	Max	-1.877E-14	-173.4584	18-1	0.5127
18	0.	SLV6-NL	Min	-6.728E-16	-22.7781	18-1	0.
18	0.25635	SLV6-NL	Min	-9.810E-15	-98.843	18-1	0.25635

Table: Element Forces - Frames, Part 2 of 2

Frame	Station	OutputCase	StepType	M2	M3	FrameElem	ElemStation
	m			KN-m	KN-m		m
18	0.5127	SLV6-NL	Min	-1.877E-14	-173.4584	18-1	0.5127
18	0.	SLV7-NL	Max	-3.306E-16	-19.0074	18-1	0.
18	0.25635	SLV7-NL	Max	-9.284E-15	-93.5359	18-1	0.25635
18	0.5127	SLV7-NL	Max	-1.807E-14	-166.7186	18-1	0.5127
18	0.	SLV7-NL	Min	-3.306E-16	-19.0074	18-1	0.
18	0.25635	SLV7-NL	Min	-9.284E-15	-93.5359	18-1	0.25635
18	0.5127	SLV7-NL	Min	-1.807E-14	-166.7186	18-1	0.5127
18	0.	SLV8-NL	Max	-3.908E-16	-19.8981	18-1	0.
18	0.25635	SLV8-NL	Max	-9.505E-15	-95.7665	18-1	0.25635
18	0.5127	SLV8-NL	Max	-1.846E-14	-170.3161	18-1	0.5127
18	0.	SLV8-NL	Min	-3.908E-16	-19.8981	18-1	0.
18	0.25635	SLV8-NL	Min	-9.505E-15	-95.7665	18-1	0.25635
18	0.5127	SLV8-NL	Min	-1.846E-14	-170.3161	18-1	0.5127
18	0.	SLV9-NL	Max	-8.400E-16	-23.3857	18-1	0.
18	0.25635	SLV9-NL	Max	-9.361E-15	-94.3187	18-1	0.25635
18	0.5127	SLV9-NL	Max	-1.772E-14	-163.9188	18-1	0.5127
18	0.	SLV9-NL	Min	-8.400E-16	-23.3857	18-1	0.
18	0.25635	SLV9-NL	Min	-9.361E-15	-94.3187	18-1	0.25635
18	0.5127	SLV9-NL	Min	-1.772E-14	-163.9188	18-1	0.5127
18	0.	SLV10-NL	Max	-6.751E-16	-22.9251	18-1	0.
18	0.25635	SLV10-NL	Max	-9.882E-15	-99.5695	18-1	0.25635
18	0.5127	SLV10-NL	Max	-1.892E-14	-174.7905	18-1	0.5127
18	0.	SLV10-NL	Min	-6.751E-16	-22.9251	18-1	0.
18	0.25635	SLV10-NL	Min	-9.882E-15	-99.5695	18-1	0.25635
18	0.5127	SLV10-NL	Min	-1.892E-14	-174.7905	18-1	0.5127
18	0.	SLV11-NL	Max	-5.936E-16	-21.4497	18-1	0.
18	0.25635	SLV11-NL	Max	-9.428E-15	-94.9903	18-1	0.25635
18	0.5127	SLV11-NL	Max	-1.809E-14	-167.1589	18-1	0.5127
18	0.	SLV11-NL	Min	-5.936E-16	-21.4497	18-1	0.
18	0.25635	SLV11-NL	Min	-9.428E-15	-94.9903	18-1	0.25635
18	0.5127	SLV11-NL	Min	-1.809E-14	-167.1589	18-1	0.5127
18	0.	SLV12-NL	Max	-4.099E-16	-20.8006	18-1	0.
18	0.25635	SLV12-NL	Max	-9.931E-15	-100.0539	18-1	0.25635
18	0.5127	SLV12-NL	Max	-1.927E-14	-177.8446	18-1	0.5127
18	0.	SLV12-NL	Min	-4.099E-16	-20.8006	18-1	0.
18	0.25635	SLV12-NL	Min	-9.931E-15	-100.0539	18-1	0.25635
18	0.5127	SLV12-NL	Min	-1.927E-14	-177.8446	18-1	0.5127
18	0.	SLV13-NL	Max	-5.447E-16	-20.4424	18-1	0.
18	0.25635	SLV13-NL	Max	-9.085E-15	-91.5336	18-1	0.25635
18	0.5127	SLV13-NL	Max	-1.746E-14	-161.3062	18-1	0.5127
18	0.	SLV13-NL	Min	-5.447E-16	-20.4424	18-1	0.
18	0.25635	SLV13-NL	Min	-9.085E-15	-91.5336	18-1	0.25635
18	0.5127	SLV13-NL	Min	-1.746E-14	-161.3062	18-1	0.5127
18	0.	SLV14-NL	Max	-3.531E-16	-18.8642	18-1	0.
18	0.25635	SLV14-NL	Max	-9.095E-15	-91.636	18-1	0.25635
18	0.5127	SLV14-NL	Max	-1.767E-14	-163.0619	18-1	0.5127
18	0.	SLV14-NL	Min	-3.531E-16	-18.8642	18-1	0.
18	0.25635	SLV14-NL	Min	-9.095E-15	-91.636	18-1	0.25635
18	0.5127	SLV14-NL	Min	-1.767E-14	-163.0619	18-1	0.5127
18	0.	SLV15-NL	Max	2.410E-16	-14.3337	18-1	0.
18	0.25635	SLV15-NL	Max	-9.334E-15	-94.0379	18-1	0.25635
18	0.5127	SLV15-NL	Max	-1.873E-14	-172.2927	18-1	0.5127
18	0.	SLV15-NL	Min	2.410E-16	-14.3337	18-1	0.
18	0.25635	SLV15-NL	Min	-9.334E-15	-94.0379	18-1	0.25635

Table: Element Forces - Frames, Part 2 of 2

Frame	Station	OutputCase	StepType	M2	M3	FrameElem	ElemStation
	m			KN-m	KN-m		m
18	0.5127	SLV15-NL	Min	-1.873E-14	-172.2927	18-1	0.5127
18	0.	SLV16-NL	Max	4.661E-16	-12.413	18-1	0.
18	0.25635	SLV16-NL	Max	-9.308E-15	-93.772	18-1	0.25635
18	0.5127	SLV16-NL	Max	-1.890E-14	-173.6544	18-1	0.5127
18	0.	SLV16-NL	Min	4.661E-16	-12.413	18-1	0.
18	0.25635	SLV16-NL	Min	-9.308E-15	-93.772	18-1	0.25635
18	0.5127	SLV16-NL	Min	-1.890E-14	-173.6544	18-1	0.5127
21	0.	SLU 1-NL	Max	0.	-542.4223	21-1	0.
21	0.41857	SLU 1-NL	Max	0.	-375.8735	21-1	0.41857
21	0.41857	SLU 1-NL	Max	0.	-375.8735	21-2	0.
21	0.83713	SLU 1-NL	Max	0.	-237.7699	21-2	0.41857
21	0.83713	SLU 1-NL	Max	0.	-237.7699	21-3	0.
21	1.04642	SLU 1-NL	Max	0.	-178.882	21-3	0.20928
21	1.2557	SLU 1-NL	Max	0.	-126.5008	21-3	0.41857
21	1.2557	SLU 1-NL	Max	0.	-126.5008	21-4	0.
21	1.67427	SLU 1-NL	Max	0.	-40.456	21-4	0.41857
21	1.67427	SLU 1-NL	Max	0.	-40.456	21-5	0.
21	2.09284	SLU 1-NL	Max	0.	21.9746	21-5	0.41857
21	0.	SLU 1-NL	Min	0.	-542.4223	21-1	0.
21	0.41857	SLU 1-NL	Min	0.	-375.8735	21-1	0.41857
21	0.41857	SLU 1-NL	Min	0.	-375.8735	21-2	0.
21	0.83713	SLU 1-NL	Min	0.	-237.7699	21-2	0.41857
21	0.83713	SLU 1-NL	Min	0.	-237.7699	21-3	0.
21	1.04642	SLU 1-NL	Min	0.	-178.882	21-3	0.20928
21	1.2557	SLU 1-NL	Min	0.	-126.5008	21-3	0.41857
21	1.2557	SLU 1-NL	Min	0.	-126.5008	21-4	0.
21	1.67427	SLU 1-NL	Min	0.	-40.456	21-4	0.41857
21	1.67427	SLU 1-NL	Min	0.	-40.456	21-5	0.
21	2.09284	SLU 1-NL	Min	0.	21.9746	21-5	0.41857
21	0.	SLU 2-NL	Max	0.	-623.2512	21-1	0.
21	0.41857	SLU 2-NL	Max	0.	-441.2102	21-1	0.41857
21	0.41857	SLU 2-NL	Max	0.	-441.2102	21-2	0.
21	0.83713	SLU 2-NL	Max	0.	-286.4163	21-2	0.41857
21	0.83713	SLU 2-NL	Max	0.	-286.4163	21-3	0.
21	1.04642	SLU 2-NL	Max	0.	-218.743	21-3	0.20928
21	1.2557	SLU 2-NL	Max	0.	-157.2871	21-3	0.41857
21	1.2557	SLU 2-NL	Max	0.	-157.2871	21-4	0.
21	1.67427	SLU 2-NL	Max	0.	-52.2398	21-4	0.41857
21	1.67427	SLU 2-NL	Max	0.	-52.2398	21-5	0.
21	2.09284	SLU 2-NL	Max	0.	30.3077	21-5	0.41857
21	0.	SLU 2-NL	Min	0.	-623.2512	21-1	0.
21	0.41857	SLU 2-NL	Min	0.	-441.2102	21-1	0.41857
21	0.41857	SLU 2-NL	Min	0.	-441.2102	21-2	0.
21	0.83713	SLU 2-NL	Min	0.	-286.4163	21-2	0.41857
21	0.83713	SLU 2-NL	Min	0.	-286.4163	21-3	0.
21	1.04642	SLU 2-NL	Min	0.	-218.743	21-3	0.20928
21	1.2557	SLU 2-NL	Min	0.	-157.2871	21-3	0.41857
21	1.2557	SLU 2-NL	Min	0.	-157.2871	21-4	0.
21	1.67427	SLU 2-NL	Min	0.	-52.2398	21-4	0.41857
21	1.67427	SLU 2-NL	Min	0.	-52.2398	21-5	0.
21	2.09284	SLU 2-NL	Min	0.	30.3077	21-5	0.41857
21	0.	SLU 3-NL	Max	0.	-249.1037	21-1	0.
21	0.41857	SLU 3-NL	Max	0.	-161.0076	21-1	0.41857
21	0.41857	SLU 3-NL	Max	0.	-161.0076	21-2	0.

Table: Element Forces - Frames, Part 2 of 2

Frame	Station	OutputCase	StepType	M2	M3	FrameElem	ElemStation
	m			KN-m	KN-m		m
21	0.83713	SLU 3-NL	Max	0.	-92.6039	21-2	0.41857
21	0.83713	SLU 3-NL	Max	0.	-92.6039	21-3	0.
21	1.04642	SLU 3-NL	Max	0.	-65.3909	21-3	0.20928
21	1.2557	SLU 3-NL	Max	0.	-42.6258	21-3	0.41857
21	1.2557	SLU 3-NL	Max	0.	-42.6258	21-4	0.
21	1.67427	SLU 3-NL	Max	0.	-9.8064	21-4	0.41857
21	1.67427	SLU 3-NL	Max	0.	-9.8064	21-5	0.
21	2.09284	SLU 3-NL	Max	0.	7.121	21-5	0.41857
21	0.	SLU 3-NL	Min	0.	-249.1037	21-1	0.
21	0.41857	SLU 3-NL	Min	0.	-161.0076	21-1	0.41857
21	0.41857	SLU 3-NL	Min	0.	-161.0076	21-2	0.
21	0.83713	SLU 3-NL	Min	0.	-92.6039	21-2	0.41857
21	0.83713	SLU 3-NL	Min	0.	-92.6039	21-3	0.
21	1.04642	SLU 3-NL	Min	0.	-65.3909	21-3	0.20928
21	1.2557	SLU 3-NL	Min	0.	-42.6258	21-3	0.41857
21	1.2557	SLU 3-NL	Min	0.	-42.6258	21-4	0.
21	1.67427	SLU 3-NL	Min	0.	-9.8064	21-4	0.41857
21	1.67427	SLU 3-NL	Min	0.	-9.8064	21-5	0.
21	2.09284	SLU 3-NL	Min	0.	7.121	21-5	0.41857
21	0.	SLU 4-NL	Max	0.	-527.4794	21-1	0.
21	0.41857	SLU 4-NL	Max	0.	-360.7769	21-1	0.41857
21	0.41857	SLU 4-NL	Max	0.	-360.7769	21-2	0.
21	0.83713	SLU 4-NL	Max	0.	-222.522	21-2	0.41857
21	0.83713	SLU 4-NL	Max	0.	-222.522	21-3	0.
21	1.04642	SLU 4-NL	Max	0.	-163.5596	21-3	0.20928
21	1.2557	SLU 4-NL	Max	0.	-111.104	21-3	0.41857
21	1.2557	SLU 4-NL	Max	0.	-111.104	21-4	0.
21	1.67427	SLU 4-NL	Max	0.	-24.9126	21-4	0.41857
21	1.67427	SLU 4-NL	Max	0.	-24.9126	21-5	0.
21	2.09284	SLU 4-NL	Max	0.	37.6624	21-5	0.41857
21	0.	SLU 4-NL	Min	0.	-527.4794	21-1	0.
21	0.41857	SLU 4-NL	Min	0.	-360.7769	21-1	0.41857
21	0.41857	SLU 4-NL	Min	0.	-360.7769	21-2	0.
21	0.83713	SLU 4-NL	Min	0.	-222.522	21-2	0.41857
21	0.83713	SLU 4-NL	Min	0.	-222.522	21-3	0.
21	1.04642	SLU 4-NL	Min	0.	-163.5596	21-3	0.20928
21	1.2557	SLU 4-NL	Min	0.	-111.104	21-3	0.41857
21	1.2557	SLU 4-NL	Min	0.	-111.104	21-4	0.
21	1.67427	SLU 4-NL	Min	0.	-24.9126	21-4	0.41857
21	1.67427	SLU 4-NL	Min	0.	-24.9126	21-5	0.
21	2.09284	SLU 4-NL	Min	0.	37.6624	21-5	0.41857
21	0.	SLU 5-NL	Max	0.	-226.9113	21-1	0.
21	0.41857	SLU 5-NL	Max	0.	-140.2273	21-1	0.41857
21	0.41857	SLU 5-NL	Max	0.	-140.2273	21-2	0.
21	0.83713	SLU 5-NL	Max	0.	-73.2371	21-2	0.41857
21	0.83713	SLU 5-NL	Max	0.	-73.2371	21-3	0.
21	1.04642	SLU 5-NL	Max	0.	-46.7313	21-3	0.20928
21	1.2557	SLU 5-NL	Max	0.	-24.6736	21-3	0.41857
21	1.2557	SLU 5-NL	Max	0.	-24.6736	21-4	0.
21	1.67427	SLU 5-NL	Max	0.	6.7301	21-4	0.41857
21	1.67427	SLU 5-NL	Max	0.	6.7301	21-5	0.
21	2.09284	SLU 5-NL	Max	0.	22.2406	21-5	0.41857
21	0.	SLU 5-NL	Min	0.	-226.9113	21-1	0.
21	0.41857	SLU 5-NL	Min	0.	-140.2273	21-1	0.41857

Table: Element Forces - Frames, Part 2 of 2

Frame	Station	OutputCase	StepType	M2	M3	FrameElem	ElemStation
	m			KN-m	KN-m		m
21	0.41857	SLU 5-NL	Min	0.	-140.2273	21-2	0.
21	0.83713	SLU 5-NL	Min	0.	-73.2371	21-2	0.41857
21	0.83713	SLU 5-NL	Min	0.	-73.2371	21-3	0.
21	1.04642	SLU 5-NL	Min	0.	-46.7313	21-3	0.20928
21	1.2557	SLU 5-NL	Min	0.	-24.6736	21-3	0.41857
21	1.2557	SLU 5-NL	Min	0.	-24.6736	21-4	0.
21	1.67427	SLU 5-NL	Min	0.	6.7301	21-4	0.41857
21	1.67427	SLU 5-NL	Min	0.	6.7301	21-5	0.
21	2.09284	SLU 5-NL	Min	0.	22.2406	21-5	0.41857
21	0.	SLU 6-NL	Max	0.	-565.4764	21-1	0.
21	0.41857	SLU 6-NL	Max	0.	-400.5364	21-1	0.41857
21	0.41857	SLU 6-NL	Max	0.	-400.5364	21-2	0.
21	0.83713	SLU 6-NL	Max	0.	-262.8399	21-2	0.41857
21	0.83713	SLU 6-NL	Max	0.	-262.8399	21-3	0.
21	1.04642	SLU 6-NL	Max	0.	-203.7135	21-3	0.20928
21	1.2557	SLU 6-NL	Max	0.	-150.8043	21-3	0.41857
21	1.2557	SLU 6-NL	Max	0.	-150.8043	21-4	0.
21	1.67427	SLU 6-NL	Max	0.	-62.8473	21-4	0.41857
21	1.67427	SLU 6-NL	Max	0.	-62.8473	21-5	0.
21	2.09284	SLU 6-NL	Max	0.	2.6133	21-5	0.41857
21	0.	SLU 6-NL	Min	0.	-565.4764	21-1	0.
21	0.41857	SLU 6-NL	Min	0.	-400.5364	21-1	0.41857
21	0.41857	SLU 6-NL	Min	0.	-400.5364	21-2	0.
21	0.83713	SLU 6-NL	Min	0.	-262.8399	21-2	0.41857
21	0.83713	SLU 6-NL	Min	0.	-262.8399	21-3	0.
21	1.04642	SLU 6-NL	Min	0.	-203.7135	21-3	0.20928
21	1.2557	SLU 6-NL	Min	0.	-150.8043	21-3	0.41857
21	1.2557	SLU 6-NL	Min	0.	-150.8043	21-4	0.
21	1.67427	SLU 6-NL	Min	0.	-62.8473	21-4	0.41857
21	1.67427	SLU 6-NL	Min	0.	-62.8473	21-5	0.
21	2.09284	SLU 6-NL	Min	0.	2.6133	21-5	0.41857
21	0.	SLU 7-NL	Max	0.	-267.1577	21-1	0.
21	0.41857	SLU 7-NL	Max	0.	-182.0255	21-1	0.41857
21	0.41857	SLU 7-NL	Max	0.	-182.0255	21-2	0.
21	0.83713	SLU 7-NL	Max	0.	-115.385	21-2	0.41857
21	0.83713	SLU 7-NL	Max	0.	-115.385	21-3	0.
21	1.04642	SLU 7-NL	Max	0.	-88.6119	21-3	0.20928
21	1.2557	SLU 7-NL	Max	0.	-65.9973	21-3	0.41857
21	1.2557	SLU 7-NL	Max	0.	-65.9973	21-4	0.
21	1.67427	SLU 7-NL	Max	0.	-32.6234	21-4	0.41857
21	1.67427	SLU 7-NL	Max	0.	-32.6234	21-5	0.
21	2.09284	SLU 7-NL	Max	0.	-14.0243	21-5	0.41857
21	0.	SLU 7-NL	Min	0.	-267.1577	21-1	0.
21	0.41857	SLU 7-NL	Min	0.	-182.0255	21-1	0.41857
21	0.41857	SLU 7-NL	Min	0.	-182.0255	21-2	0.
21	0.83713	SLU 7-NL	Min	0.	-115.385	21-2	0.41857
21	0.83713	SLU 7-NL	Min	0.	-115.385	21-3	0.
21	1.04642	SLU 7-NL	Min	0.	-88.6119	21-3	0.20928
21	1.2557	SLU 7-NL	Min	0.	-65.9973	21-3	0.41857
21	1.2557	SLU 7-NL	Min	0.	-65.9973	21-4	0.
21	1.67427	SLU 7-NL	Min	0.	-32.6234	21-4	0.41857
21	1.67427	SLU 7-NL	Min	0.	-32.6234	21-5	0.
21	2.09284	SLU 7-NL	Min	0.	-14.0243	21-5	0.41857
21	0.	SLE-C-NL	Max	0.	-405.6077	21-1	0.

Table: Element Forces - Frames, Part 2 of 2

Frame	Station	OutputCase	StepType	M2	M3	FrameElem	ElemStation
	m			KN-m	KN-m		m
21	0.41857	SLE-C-NL	Max	0.	-280.7623	21-1	0.41857
21	0.41857	SLE-C-NL	Max	0.	-280.7623	21-2	0.
21	0.83713	SLE-C-NL	Max	0.	-177.3462	21-2	0.41857
21	0.83713	SLE-C-NL	Max	0.	-177.3462	21-3	0.
21	1.04642	SLE-C-NL	Max	0.	-133.2872	21-3	0.20928
21	1.2557	SLE-C-NL	Max	0.	-94.1205	21-3	0.41857
21	1.2557	SLE-C-NL	Max	0.	-94.1205	21-4	0.
21	1.67427	SLE-C-NL	Max	0.	-29.8464	21-4	0.41857
21	1.67427	SLE-C-NL	Max	0.	-29.8464	21-5	0.
21	2.09284	SLE-C-NL	Max	0.	16.7149	21-5	0.41857
21	0.	SLE-C-NL	Min	0.	-405.6077	21-1	0.
21	0.41857	SLE-C-NL	Min	0.	-280.7623	21-1	0.41857
21	0.41857	SLE-C-NL	Min	0.	-280.7623	21-2	0.
21	0.83713	SLE-C-NL	Min	0.	-177.3462	21-2	0.41857
21	0.83713	SLE-C-NL	Min	0.	-177.3462	21-3	0.
21	1.04642	SLE-C-NL	Min	0.	-133.2872	21-3	0.20928
21	1.2557	SLE-C-NL	Min	0.	-94.1205	21-3	0.41857
21	1.2557	SLE-C-NL	Min	0.	-94.1205	21-4	0.
21	1.67427	SLE-C-NL	Min	0.	-29.8464	21-4	0.41857
21	1.67427	SLE-C-NL	Min	0.	-29.8464	21-5	0.
21	2.09284	SLE-C-NL	Min	0.	16.7149	21-5	0.41857
21	0.	SLE-F-1-NL	Max	0.	-409.9198	21-1	0.
21	0.41857	SLE-F-1-NL	Max	0.	-285.8898	21-1	0.41857
21	0.41857	SLE-F-1-NL	Max	0.	-285.8898	21-2	0.
21	0.83713	SLE-F-1-NL	Max	0.	-182.3649	21-2	0.41857
21	0.83713	SLE-F-1-NL	Max	0.	-182.3649	21-3	0.
21	1.04642	SLE-F-1-NL	Max	0.	-137.9049	21-3	0.20928
21	1.2557	SLE-F-1-NL	Max	0.	-98.1062	21-3	0.41857
21	1.2557	SLE-F-1-NL	Max	0.	-98.1062	21-4	0.
21	1.67427	SLE-F-1-NL	Max	0.	-31.8747	21-4	0.41857
21	1.67427	SLE-F-1-NL	Max	0.	-31.8747	21-5	0.
21	2.09284	SLE-F-1-NL	Max	0.	17.5682	21-5	0.41857
21	0.	SLE-F-1-NL	Min	0.	-409.9198	21-1	0.
21	0.41857	SLE-F-1-NL	Min	0.	-285.8898	21-1	0.41857
21	0.41857	SLE-F-1-NL	Min	0.	-285.8898	21-2	0.
21	0.83713	SLE-F-1-NL	Min	0.	-182.3649	21-2	0.41857
21	0.83713	SLE-F-1-NL	Min	0.	-182.3649	21-3	0.
21	1.04642	SLE-F-1-NL	Min	0.	-137.9049	21-3	0.20928
21	1.2557	SLE-F-1-NL	Min	0.	-98.1062	21-3	0.41857
21	1.2557	SLE-F-1-NL	Min	0.	-98.1062	21-4	0.
21	1.67427	SLE-F-1-NL	Min	0.	-31.8747	21-4	0.41857
21	1.67427	SLE-F-1-NL	Min	0.	-31.8747	21-5	0.
21	2.09284	SLE-F-1-NL	Min	0.	17.5682	21-5	0.41857
21	0.	SLE-F-2-NL	Max	0.	-306.8015	21-1	0.
21	0.41857	SLE-F-2-NL	Max	0.	-206.2526	21-1	0.41857
21	0.41857	SLE-F-2-NL	Max	0.	-206.2526	21-2	0.
21	0.83713	SLE-F-2-NL	Max	0.	-124.5354	21-2	0.41857
21	0.83713	SLE-F-2-NL	Max	0.	-124.5354	21-3	0.
21	1.04642	SLE-F-2-NL	Max	0.	-90.3518	21-3	0.20928
21	1.2557	SLE-F-2-NL	Max	0.	-60.4109	21-3	0.41857
21	1.2557	SLE-F-2-NL	Max	0.	-60.4109	21-4	0.
21	1.67427	SLE-F-2-NL	Max	0.	-12.64	21-4	0.41857
21	1.67427	SLE-F-2-NL	Max	0.	-12.64	21-5	0.
21	2.09284	SLE-F-2-NL	Max	0.	20.0165	21-5	0.41857

Table: Element Forces - Frames, Part 2 of 2

Frame	Station	OutputCase	StepType	M2	M3	FrameElem	ElemStation
	m			KN-m	KN-m		m
21	0.	SLE-F-2-NL	Min	0.	-306.8015	21-1	0.
21	0.41857	SLE-F-2-NL	Min	0.	-206.2526	21-1	0.41857
21	0.41857	SLE-F-2-NL	Min	0.	-206.2526	21-2	0.
21	0.83713	SLE-F-2-NL	Min	0.	-124.5354	21-2	0.41857
21	0.83713	SLE-F-2-NL	Min	0.	-124.5354	21-3	0.
21	1.04642	SLE-F-2-NL	Min	0.	-90.3518	21-3	0.20928
21	1.2557	SLE-F-2-NL	Min	0.	-60.4109	21-3	0.41857
21	1.2557	SLE-F-2-NL	Min	0.	-60.4109	21-4	0.
21	1.67427	SLE-F-2-NL	Min	0.	-12.64	21-4	0.41857
21	1.67427	SLE-F-2-NL	Min	0.	-12.64	21-5	0.
21	2.09284	SLE-F-2-NL	Min	0.	20.0165	21-5	0.41857
21	0.	SLE-F-3-NL	Max	0.	-320.6374	21-1	0.
21	0.41857	SLE-F-3-NL	Max	0.	-220.3928	21-1	0.41857
21	0.41857	SLE-F-3-NL	Max	0.	-220.3928	21-2	0.
21	0.83713	SLE-F-3-NL	Max	0.	-138.641	21-2	0.41857
21	0.83713	SLE-F-3-NL	Max	0.	-138.641	21-3	0.
21	1.04642	SLE-F-3-NL	Max	0.	-104.3127	21-3	0.20928
21	1.2557	SLE-F-3-NL	Max	0.	-74.143	21-3	0.41857
21	1.2557	SLE-F-3-NL	Max	0.	-74.143	21-4	0.
21	1.67427	SLE-F-3-NL	Max	0.	-25.6597	21-4	0.41857
21	1.67427	SLE-F-3-NL	Max	0.	-25.6597	21-5	0.
21	2.09284	SLE-F-3-NL	Max	0.	8.0476	21-5	0.41857
21	0.	SLE-F-3-NL	Min	0.	-320.6374	21-1	0.
21	0.41857	SLE-F-3-NL	Min	0.	-220.3928	21-1	0.41857
21	0.41857	SLE-F-3-NL	Min	0.	-220.3928	21-2	0.
21	0.83713	SLE-F-3-NL	Min	0.	-138.641	21-2	0.41857
21	0.83713	SLE-F-3-NL	Min	0.	-138.641	21-3	0.
21	1.04642	SLE-F-3-NL	Min	0.	-104.3127	21-3	0.20928
21	1.2557	SLE-F-3-NL	Min	0.	-74.143	21-3	0.41857
21	1.2557	SLE-F-3-NL	Min	0.	-74.143	21-4	0.
21	1.67427	SLE-F-3-NL	Min	0.	-25.6597	21-4	0.41857
21	1.67427	SLE-F-3-NL	Min	0.	-25.6597	21-5	0.
21	2.09284	SLE-F-3-NL	Min	0.	8.0476	21-5	0.41857
21	0.	SLE-QP-NL	Max	0.	-329.959	21-1	0.
21	0.41857	SLE-QP-NL	Max	0.	-226.3691	21-1	0.41857
21	0.41857	SLE-QP-NL	Max	0.	-226.3691	21-2	0.
21	0.83713	SLE-QP-NL	Max	0.	-141.273	21-2	0.41857
21	0.83713	SLE-QP-NL	Max	0.	-141.273	21-3	0.
21	1.04642	SLE-QP-NL	Max	0.	-105.273	21-3	0.20928
21	1.2557	SLE-QP-NL	Max	0.	-73.4315	21-3	0.41857
21	1.2557	SLE-QP-NL	Max	0.	-73.4315	21-4	0.
21	1.67427	SLE-QP-NL	Max	0.	-21.6057	21-4	0.41857
21	1.67427	SLE-QP-NL	Max	0.	-21.6057	21-5	0.
21	2.09284	SLE-QP-NL	Max	0.	15.4434	21-5	0.41857
21	0.	SLE-QP-NL	Min	0.	-329.959	21-1	0.
21	0.41857	SLE-QP-NL	Min	0.	-226.3691	21-1	0.41857
21	0.41857	SLE-QP-NL	Min	0.	-226.3691	21-2	0.
21	0.83713	SLE-QP-NL	Min	0.	-141.273	21-2	0.41857
21	0.83713	SLE-QP-NL	Min	0.	-141.273	21-3	0.
21	1.04642	SLE-QP-NL	Min	0.	-105.273	21-3	0.20928
21	1.2557	SLE-QP-NL	Min	0.	-73.4315	21-3	0.41857
21	1.2557	SLE-QP-NL	Min	0.	-73.4315	21-4	0.
21	1.67427	SLE-QP-NL	Min	0.	-21.6057	21-4	0.41857
21	1.67427	SLE-QP-NL	Min	0.	-21.6057	21-5	0.

Table: Element Forces - Frames, Part 2 of 2

Frame	Station	OutputCase	StepType	M2	M3	FrameElem	ElemStation
	m			KN-m	KN-m		m
21	2.09284	SLE-QP-NL	Min	0.	15.4434	21-5	0.41857
21	0.	SLV1-NL	Max	0.	-248.1445	21-1	0.
21	0.41857	SLV1-NL	Max	0.	-154.2322	21-1	0.41857
21	0.41857	SLV1-NL	Max	0.	-154.2322	21-2	0.
21	0.83713	SLV1-NL	Max	0.	-80.6093	21-2	0.41857
21	0.83713	SLV1-NL	Max	0.	-80.6093	21-3	0.
21	1.04642	SLV1-NL	Max	0.	-51.0059	21-3	0.20928
21	1.2557	SLV1-NL	Max	0.	-25.9934	21-3	0.41857
21	1.2557	SLV1-NL	Max	0.	-25.9934	21-4	0.
21	1.67427	SLV1-NL	Max	0.	10.8978	21-4	0.41857
21	1.67427	SLV1-NL	Max	0.	10.8978	21-5	0.
21	2.09284	SLV1-NL	Max	0.	31.3463	21-5	0.41857
21	0.	SLV1-NL	Min	0.	-248.1445	21-1	0.
21	0.41857	SLV1-NL	Min	0.	-154.2322	21-1	0.41857
21	0.41857	SLV1-NL	Min	0.	-154.2322	21-2	0.
21	0.83713	SLV1-NL	Min	0.	-80.6093	21-2	0.41857
21	0.83713	SLV1-NL	Min	0.	-80.6093	21-3	0.
21	1.04642	SLV1-NL	Min	0.	-51.0059	21-3	0.20928
21	1.2557	SLV1-NL	Min	0.	-25.9934	21-3	0.41857
21	1.2557	SLV1-NL	Min	0.	-25.9934	21-4	0.
21	1.67427	SLV1-NL	Min	0.	10.8978	21-4	0.41857
21	1.67427	SLV1-NL	Min	0.	10.8978	21-5	0.
21	2.09284	SLV1-NL	Min	0.	31.3463	21-5	0.41857
21	0.	SLV2-NL	Max	0.	-356.0701	21-1	0.
21	0.41857	SLV2-NL	Max	0.	-254.2625	21-1	0.41857
21	0.41857	SLV2-NL	Max	0.	-254.2625	21-2	0.
21	0.83713	SLV2-NL	Max	0.	-170.2378	21-2	0.41857
21	0.83713	SLV2-NL	Max	0.	-170.2378	21-3	0.
21	1.04642	SLV2-NL	Max	0.	-134.5151	21-3	0.20928
21	1.2557	SLV2-NL	Max	0.	-102.7837	21-3	0.41857
21	1.2557	SLV2-NL	Max	0.	-102.7837	21-4	0.
21	1.67427	SLV2-NL	Max	0.	-50.6876	21-4	0.41857
21	1.67427	SLV2-NL	Max	0.	-50.6876	21-5	0.
21	2.09284	SLV2-NL	Max	0.	-12.7372	21-5	0.41857
21	0.	SLV2-NL	Min	0.	-356.0701	21-1	0.
21	0.41857	SLV2-NL	Min	0.	-254.2625	21-1	0.41857
21	0.41857	SLV2-NL	Min	0.	-254.2625	21-2	0.
21	0.83713	SLV2-NL	Min	0.	-170.2378	21-2	0.41857
21	0.83713	SLV2-NL	Min	0.	-170.2378	21-3	0.
21	1.04642	SLV2-NL	Min	0.	-134.5151	21-3	0.20928
21	1.2557	SLV2-NL	Min	0.	-102.7837	21-3	0.41857
21	1.2557	SLV2-NL	Min	0.	-102.7837	21-4	0.
21	1.67427	SLV2-NL	Min	0.	-50.6876	21-4	0.41857
21	1.67427	SLV2-NL	Min	0.	-50.6876	21-5	0.
21	2.09284	SLV2-NL	Min	0.	-12.7372	21-5	0.41857
21	0.	SLV3-NL	Max	0.	-253.7656	21-1	0.
21	0.41857	SLV3-NL	Max	0.	-158.5805	21-1	0.41857
21	0.41857	SLV3-NL	Max	0.	-158.5805	21-2	0.
21	0.83713	SLV3-NL	Max	0.	-83.7729	21-2	0.41857
21	0.83713	SLV3-NL	Max	0.	-83.7729	21-3	0.
21	1.04642	SLV3-NL	Max	0.	-53.6155	21-3	0.20928
21	1.2557	SLV3-NL	Max	0.	-28.0775	21-3	0.41857
21	1.2557	SLV3-NL	Max	0.	-28.0775	21-4	0.
21	1.67427	SLV3-NL	Max	0.	9.7716	21-4	0.41857

Table: Element Forces - Frames, Part 2 of 2

Frame	Station	OutputCase	StepType	M2	M3	FrameElem	ElemStation
	m			KN-m	KN-m		m
21	1.67427	SLV3-NL	Max	0.	9.7716	21-5	0.
21	2.09284	SLV3-NL	Max	0.	31.0395	21-5	0.41857
21	0.	SLV3-NL	Min	0.	-253.7656	21-1	0.
21	0.41857	SLV3-NL	Min	0.	-158.5805	21-1	0.41857
21	0.41857	SLV3-NL	Min	0.	-158.5805	21-2	0.
21	0.83713	SLV3-NL	Min	0.	-83.7729	21-2	0.41857
21	0.83713	SLV3-NL	Min	0.	-83.7729	21-3	0.
21	1.04642	SLV3-NL	Min	0.	-53.6155	21-3	0.20928
21	1.2557	SLV3-NL	Min	0.	-28.0775	21-3	0.41857
21	1.2557	SLV3-NL	Min	0.	-28.0775	21-4	0.
21	1.67427	SLV3-NL	Min	0.	9.7716	21-4	0.41857
21	1.67427	SLV3-NL	Min	0.	9.7716	21-5	0.
21	2.09284	SLV3-NL	Min	0.	31.0395	21-5	0.41857
21	0.	SLV4-NL	Max	0.	-361.673	21-1	0.
21	0.41857	SLV4-NL	Max	0.	-258.5943	21-1	0.41857
21	0.41857	SLV4-NL	Max	0.	-258.5943	21-2	0.
21	0.83713	SLV4-NL	Max	0.	-173.3868	21-2	0.41857
21	0.83713	SLV4-NL	Max	0.	-173.3868	21-3	0.
21	1.04642	SLV4-NL	Max	0.	-137.1111	21-3	0.20928
21	1.2557	SLV4-NL	Max	0.	-104.8549	21-3	0.41857
21	1.2557	SLV4-NL	Max	0.	-104.8549	21-4	0.
21	1.67427	SLV4-NL	Max	0.	-51.8027	21-4	0.41857
21	1.67427	SLV4-NL	Max	0.	-51.8027	21-5	0.
21	2.09284	SLV4-NL	Max	0.	-13.0347	21-5	0.41857
21	0.	SLV4-NL	Min	0.	-361.673	21-1	0.
21	0.41857	SLV4-NL	Min	0.	-258.5943	21-1	0.41857
21	0.41857	SLV4-NL	Min	0.	-258.5943	21-2	0.
21	0.83713	SLV4-NL	Min	0.	-173.3868	21-2	0.41857
21	0.83713	SLV4-NL	Min	0.	-173.3868	21-3	0.
21	1.04642	SLV4-NL	Min	0.	-137.1111	21-3	0.20928
21	1.2557	SLV4-NL	Min	0.	-104.8549	21-3	0.41857
21	1.2557	SLV4-NL	Min	0.	-104.8549	21-4	0.
21	1.67427	SLV4-NL	Min	0.	-51.8027	21-4	0.41857
21	1.67427	SLV4-NL	Min	0.	-51.8027	21-5	0.
21	2.09284	SLV4-NL	Min	0.	-13.0347	21-5	0.41857
21	0.	SLV5-NL	Max	0.	-311.2406	21-1	0.
21	0.41857	SLV5-NL	Max	0.	-208.6784	21-1	0.41857
21	0.41857	SLV5-NL	Max	0.	-208.6784	21-2	0.
21	0.83713	SLV5-NL	Max	0.	-125.4258	21-2	0.41857
21	0.83713	SLV5-NL	Max	0.	-125.4258	21-3	0.
21	1.04642	SLV5-NL	Max	0.	-90.6415	21-3	0.20928
21	1.2557	SLV5-NL	Max	0.	-60.2052	21-3	0.41857
21	1.2557	SLV5-NL	Max	0.	-60.2052	21-4	0.
21	1.67427	SLV5-NL	Max	0.	-11.7396	21-4	0.41857
21	1.67427	SLV5-NL	Max	0.	-11.7396	21-5	0.
21	2.09284	SLV5-NL	Max	0.	21.2484	21-5	0.41857
21	0.	SLV5-NL	Min	0.	-311.2406	21-1	0.
21	0.41857	SLV5-NL	Min	0.	-208.6784	21-1	0.41857
21	0.41857	SLV5-NL	Min	0.	-208.6784	21-2	0.
21	0.83713	SLV5-NL	Min	0.	-125.4258	21-2	0.41857
21	0.83713	SLV5-NL	Min	0.	-125.4258	21-3	0.
21	1.04642	SLV5-NL	Min	0.	-90.6415	21-3	0.20928
21	1.2557	SLV5-NL	Min	0.	-60.2052	21-3	0.41857
21	1.2557	SLV5-NL	Min	0.	-60.2052	21-4	0.

Table: Element Forces - Frames, Part 2 of 2

Frame	Station	OutputCase	StepType	M2	M3	FrameElem	ElemStation
	m			KN-m	KN-m		m
21	1.67427	SLV5-NL	Min	0.	-11.7396	21-4	0.41857
21	1.67427	SLV5-NL	Min	0.	-11.7396	21-5	0.
21	2.09284	SLV5-NL	Min	0.	21.2484	21-5	0.41857
21	0.	SLV6-NL	Max	0.	-342.7958	21-1	0.
21	0.41857	SLV6-NL	Max	0.	-237.9383	21-1	0.41857
21	0.41857	SLV6-NL	Max	0.	-237.9383	21-2	0.
21	0.83713	SLV6-NL	Max	0.	-151.6384	21-2	0.41857
21	0.83713	SLV6-NL	Max	0.	-151.6384	21-3	0.
21	1.04642	SLV6-NL	Max	0.	-115.055	21-3	0.20928
21	1.2557	SLV6-NL	Max	0.	-82.6398	21-3	0.41857
21	1.2557	SLV6-NL	Max	0.	-82.6398	21-4	0.
21	1.67427	SLV6-NL	Max	0.	-29.6861	21-4	0.41857
21	1.67427	SLV6-NL	Max	0.	-29.6861	21-5	0.
21	2.09284	SLV6-NL	Max	0.	8.4788	21-5	0.41857
21	0.	SLV6-NL	Min	0.	-342.7958	21-1	0.
21	0.41857	SLV6-NL	Min	0.	-237.9383	21-1	0.41857
21	0.41857	SLV6-NL	Min	0.	-237.9383	21-2	0.
21	0.83713	SLV6-NL	Min	0.	-151.6384	21-2	0.41857
21	0.83713	SLV6-NL	Min	0.	-151.6384	21-3	0.
21	1.04642	SLV6-NL	Min	0.	-115.055	21-3	0.20928
21	1.2557	SLV6-NL	Min	0.	-82.6398	21-3	0.41857
21	1.2557	SLV6-NL	Min	0.	-82.6398	21-4	0.
21	1.67427	SLV6-NL	Min	0.	-29.6861	21-4	0.41857
21	1.67427	SLV6-NL	Min	0.	-29.6861	21-5	0.
21	2.09284	SLV6-NL	Min	0.	8.4788	21-5	0.41857
21	0.	SLV7-NL	Max	0.	-329.9853	21-1	0.
21	0.41857	SLV7-NL	Max	0.	-223.1798	21-1	0.41857
21	0.41857	SLV7-NL	Max	0.	-223.1798	21-2	0.
21	0.83713	SLV7-NL	Max	0.	-135.9782	21-2	0.41857
21	0.83713	SLV7-NL	Max	0.	-135.9782	21-3	0.
21	1.04642	SLV7-NL	Max	0.	-99.3473	21-3	0.20928
21	1.2557	SLV7-NL	Max	0.	-67.1589	21-3	0.41857
21	1.2557	SLV7-NL	Max	0.	-67.1589	21-4	0.
21	1.67427	SLV7-NL	Max	0.	-15.5002	21-4	0.41857
21	1.67427	SLV7-NL	Max	0.	-15.5002	21-5	0.
21	2.09284	SLV7-NL	Max	0.	20.2196	21-5	0.41857
21	0.	SLV7-NL	Min	0.	-329.9853	21-1	0.
21	0.41857	SLV7-NL	Min	0.	-223.1798	21-1	0.41857
21	0.41857	SLV7-NL	Min	0.	-223.1798	21-2	0.
21	0.83713	SLV7-NL	Min	0.	-135.9782	21-2	0.41857
21	0.83713	SLV7-NL	Min	0.	-135.9782	21-3	0.
21	1.04642	SLV7-NL	Min	0.	-99.3473	21-3	0.20928
21	1.2557	SLV7-NL	Min	0.	-67.1589	21-3	0.41857
21	1.2557	SLV7-NL	Min	0.	-67.1589	21-4	0.
21	1.67427	SLV7-NL	Min	0.	-15.5002	21-4	0.41857
21	1.67427	SLV7-NL	Min	0.	-15.5002	21-5	0.
21	2.09284	SLV7-NL	Min	0.	20.2196	21-5	0.41857
21	0.	SLV8-NL	Max	0.	-361.4595	21-1	0.
21	0.41857	SLV8-NL	Max	0.	-252.366	21-1	0.41857
21	0.41857	SLV8-NL	Max	0.	-252.366	21-2	0.
21	0.83713	SLV8-NL	Max	0.	-162.1246	21-2	0.41857
21	0.83713	SLV8-NL	Max	0.	-162.1246	21-3	0.
21	1.04642	SLV8-NL	Max	0.	-123.6983	21-3	0.20928
21	1.2557	SLV8-NL	Max	0.	-89.5346	21-3	0.41857

Table: Element Forces - Frames, Part 2 of 2

Frame	Station	OutputCase	StepType	M2	M3	FrameElem	ElemStation
	m			KN-m	KN-m		m
21	1.2557	SLV8-NL	Max	0.	-89.5346	21-4	0.
21	1.67427	SLV8-NL	Max	0.	-33.3952	21-4	0.41857
21	1.67427	SLV8-NL	Max	0.	-33.3952	21-5	0.
21	2.09284	SLV8-NL	Max	0.	7.4942	21-5	0.41857
21	0.	SLV8-NL	Min	0.	-361.4595	21-1	0.
21	0.41857	SLV8-NL	Min	0.	-252.366	21-1	0.41857
21	0.41857	SLV8-NL	Min	0.	-252.366	21-2	0.
21	0.83713	SLV8-NL	Min	0.	-162.1246	21-2	0.41857
21	0.83713	SLV8-NL	Min	0.	-162.1246	21-3	0.
21	1.04642	SLV8-NL	Min	0.	-123.6983	21-3	0.20928
21	1.2557	SLV8-NL	Min	0.	-89.5346	21-3	0.41857
21	1.2557	SLV8-NL	Min	0.	-89.5346	21-4	0.
21	1.67427	SLV8-NL	Min	0.	-33.3952	21-4	0.41857
21	1.67427	SLV8-NL	Min	0.	-33.3952	21-5	0.
21	2.09284	SLV8-NL	Min	0.	7.4942	21-5	0.41857
21	0.	SLV9-NL	Max	0.	-288.6495	21-1	0.
21	0.41857	SLV9-NL	Max	0.	-190.3763	21-1	0.41857
21	0.41857	SLV9-NL	Max	0.	-190.3763	21-2	0.
21	0.83713	SLV9-NL	Max	0.	-111.6149	21-2	0.41857
21	0.83713	SLV9-NL	Max	0.	-111.6149	21-3	0.
21	1.04642	SLV9-NL	Max	0.	-79.1776	21-3	0.20928
21	1.2557	SLV9-NL	Max	0.	-51.1693	21-3	0.41857
21	1.2557	SLV9-NL	Max	0.	-51.1693	21-4	0.
21	1.67427	SLV9-NL	Max	0.	-7.8434	21-4	0.41857
21	1.67427	SLV9-NL	Max	0.	-7.8434	21-5	0.
21	2.09284	SLV9-NL	Max	0.	19.5584	21-5	0.41857
21	0.	SLV9-NL	Min	0.	-288.6495	21-1	0.
21	0.41857	SLV9-NL	Min	0.	-190.3763	21-1	0.41857
21	0.41857	SLV9-NL	Min	0.	-190.3763	21-2	0.
21	0.83713	SLV9-NL	Min	0.	-111.6149	21-2	0.41857
21	0.83713	SLV9-NL	Min	0.	-111.6149	21-3	0.
21	1.04642	SLV9-NL	Min	0.	-79.1776	21-3	0.20928
21	1.2557	SLV9-NL	Min	0.	-51.1693	21-3	0.41857
21	1.2557	SLV9-NL	Min	0.	-51.1693	21-4	0.
21	1.67427	SLV9-NL	Min	0.	-7.8434	21-4	0.41857
21	1.67427	SLV9-NL	Min	0.	-7.8434	21-5	0.
21	2.09284	SLV9-NL	Min	0.	19.5584	21-5	0.41857
21	0.	SLV10-NL	Max	0.	-363.756	21-1	0.
21	0.41857	SLV10-NL	Max	0.	-255.4649	21-1	0.41857
21	0.41857	SLV10-NL	Max	0.	-255.4649	21-2	0.
21	0.83713	SLV10-NL	Max	0.	-165.4353	21-2	0.41857
21	0.83713	SLV10-NL	Max	0.	-165.4353	21-3	0.
21	1.04642	SLV10-NL	Max	0.	-126.873	21-3	0.20928
21	1.2557	SLV10-NL	Max	0.	-92.4016	21-3	0.41857
21	1.2557	SLV10-NL	Max	0.	-92.4016	21-4	0.
21	1.67427	SLV10-NL	Max	0.	-35.0983	21-4	0.41857
21	1.67427	SLV10-NL	Max	0.	-35.0983	21-5	0.
21	2.09284	SLV10-NL	Max	0.	7.74	21-5	0.41857
21	0.	SLV10-NL	Min	0.	-363.756	21-1	0.
21	0.41857	SLV10-NL	Min	0.	-255.4649	21-1	0.41857
21	0.41857	SLV10-NL	Min	0.	-255.4649	21-2	0.
21	0.83713	SLV10-NL	Min	0.	-165.4353	21-2	0.41857
21	0.83713	SLV10-NL	Min	0.	-165.4353	21-3	0.
21	1.04642	SLV10-NL	Min	0.	-126.873	21-3	0.20928

Table: Element Forces - Frames, Part 2 of 2

Frame	Station	OutputCase	StepType	M2	M3	FrameElem	ElemStation
	m			KN-m	KN-m		m
21	1.2557	SLV10-NL	Min	0.	-92.4016	21-3	0.41857
21	1.2557	SLV10-NL	Min	0.	-92.4016	21-4	0.
21	1.67427	SLV10-NL	Min	0.	-35.0983	21-4	0.41857
21	1.67427	SLV10-NL	Min	0.	-35.0983	21-5	0.
21	2.09284	SLV10-NL	Min	0.	7.74	21-5	0.41857
21	0.	SLV11-NL	Max	0.	-302.3975	21-1	0.
21	0.41857	SLV11-NL	Max	0.	-200.4617	21-1	0.41857
21	0.41857	SLV11-NL	Max	0.	-200.4617	21-2	0.
21	0.83713	SLV11-NL	Max	0.	-118.4259	21-2	0.41857
21	0.83713	SLV11-NL	Max	0.	-118.4259	21-3	0.
21	1.04642	SLV11-NL	Max	0.	-84.4919	21-3	0.20928
21	1.2557	SLV11-NL	Max	0.	-55.0777	21-3	0.41857
21	1.2557	SLV11-NL	Max	0.	-55.0777	21-4	0.
21	1.67427	SLV11-NL	Max	0.	-9.2043	21-4	0.41857
21	1.67427	SLV11-NL	Max	0.	-9.2043	21-5	0.
21	2.09284	SLV11-NL	Max	0.	20.4067	21-5	0.41857
21	0.	SLV11-NL	Min	0.	-302.3975	21-1	0.
21	0.41857	SLV11-NL	Min	0.	-200.4617	21-1	0.41857
21	0.41857	SLV11-NL	Min	0.	-200.4617	21-2	0.
21	0.83713	SLV11-NL	Min	0.	-118.4259	21-2	0.41857
21	0.83713	SLV11-NL	Min	0.	-118.4259	21-3	0.
21	1.04642	SLV11-NL	Min	0.	-84.4919	21-3	0.20928
21	1.2557	SLV11-NL	Min	0.	-55.0777	21-3	0.41857
21	1.2557	SLV11-NL	Min	0.	-55.0777	21-4	0.
21	1.67427	SLV11-NL	Min	0.	-9.2043	21-4	0.41857
21	1.67427	SLV11-NL	Min	0.	-9.2043	21-5	0.
21	2.09284	SLV11-NL	Min	0.	20.4067	21-5	0.41857
21	0.	SLV12-NL	Max	0.	-377.4133	21-1	0.
21	0.41857	SLV12-NL	Max	0.	-265.468	21-1	0.41857
21	0.41857	SLV12-NL	Max	0.	-265.468	21-2	0.
21	0.83713	SLV12-NL	Max	0.	-172.1724	21-2	0.41857
21	0.83713	SLV12-NL	Max	0.	-172.1724	21-3	0.
21	1.04642	SLV12-NL	Max	0.	-132.1176	21-3	0.20928
21	1.2557	SLV12-NL	Max	0.	-96.2444	21-3	0.41857
21	1.2557	SLV12-NL	Max	0.	-96.2444	21-4	0.
21	1.67427	SLV12-NL	Max	0.	-36.4018	21-4	0.41857
21	1.67427	SLV12-NL	Max	0.	-36.4018	21-5	0.
21	2.09284	SLV12-NL	Max	0.	8.6373	21-5	0.41857
21	0.	SLV12-NL	Min	0.	-377.4133	21-1	0.
21	0.41857	SLV12-NL	Min	0.	-265.468	21-1	0.41857
21	0.41857	SLV12-NL	Min	0.	-265.468	21-2	0.
21	0.83713	SLV12-NL	Min	0.	-172.1724	21-2	0.41857
21	0.83713	SLV12-NL	Min	0.	-172.1724	21-3	0.
21	1.04642	SLV12-NL	Min	0.	-132.1176	21-3	0.20928
21	1.2557	SLV12-NL	Min	0.	-96.2444	21-3	0.41857
21	1.2557	SLV12-NL	Min	0.	-96.2444	21-4	0.
21	1.67427	SLV12-NL	Min	0.	-36.4018	21-4	0.41857
21	1.67427	SLV12-NL	Min	0.	-36.4018	21-5	0.
21	2.09284	SLV12-NL	Min	0.	8.6373	21-5	0.41857
21	0.	SLV13-NL	Max	0.	-311.0709	21-1	0.
21	0.41857	SLV13-NL	Max	0.	-210.8253	21-1	0.41857
21	0.41857	SLV13-NL	Max	0.	-210.8253	21-2	0.
21	0.83713	SLV13-NL	Max	0.	-129.2009	21-2	0.41857
21	0.83713	SLV13-NL	Max	0.	-129.2009	21-3	0.

Table: Element Forces - Frames, Part 2 of 2

Frame	Station	OutputCase	StepType	M2	M3	FrameElem	ElemStation
	m			KN-m	KN-m		m
21	1.04642	SLV13-NL	Max	0.	-94.9965	21-3	0.20928
21	1.2557	SLV13-NL	Max	0.	-64.9968	21-3	0.41857
21	1.2557	SLV13-NL	Max	0.	-64.9968	21-4	0.
21	1.67427	SLV13-NL	Max	0.	-17.0121	21-4	0.41857
21	1.67427	SLV13-NL	Max	0.	-17.0121	21-5	0.
21	2.09284	SLV13-NL	Max	0.	15.9538	21-5	0.41857
21	0.	SLV13-NL	Min	0.	-311.0709	21-1	0.
21	0.41857	SLV13-NL	Min	0.	-210.8253	21-1	0.41857
21	0.41857	SLV13-NL	Min	0.	-210.8253	21-2	0.
21	0.83713	SLV13-NL	Min	0.	-129.2009	21-2	0.41857
21	0.83713	SLV13-NL	Min	0.	-129.2009	21-3	0.
21	1.04642	SLV13-NL	Min	0.	-94.9965	21-3	0.20928
21	1.2557	SLV13-NL	Min	0.	-64.9968	21-3	0.41857
21	1.2557	SLV13-NL	Min	0.	-64.9968	21-4	0.
21	1.67427	SLV13-NL	Min	0.	-17.0121	21-4	0.41857
21	1.67427	SLV13-NL	Min	0.	-17.0121	21-5	0.
21	2.09284	SLV13-NL	Min	0.	15.9538	21-5	0.41857
21	0.	SLV14-NL	Max	0.	-332.5309	21-1	0.
21	0.41857	SLV14-NL	Max	0.	-229.4168	21-1	0.41857
21	0.41857	SLV14-NL	Max	0.	-229.4168	21-2	0.
21	0.83713	SLV14-NL	Max	0.	-144.5489	21-2	0.41857
21	0.83713	SLV14-NL	Max	0.	-144.5489	21-3	0.
21	1.04642	SLV14-NL	Max	0.	-108.5755	21-3	0.20928
21	1.2557	SLV14-NL	Max	0.	-76.7054	21-3	0.41857
21	1.2557	SLV14-NL	Max	0.	-76.7054	21-4	0.
21	1.67427	SLV14-NL	Max	0.	-24.6646	21-4	0.41857
21	1.67427	SLV14-NL	Max	0.	-24.6646	21-5	0.
21	2.09284	SLV14-NL	Max	0.	12.7951	21-5	0.41857
21	0.	SLV14-NL	Min	0.	-332.5309	21-1	0.
21	0.41857	SLV14-NL	Min	0.	-229.4168	21-1	0.41857
21	0.41857	SLV14-NL	Min	0.	-229.4168	21-2	0.
21	0.83713	SLV14-NL	Min	0.	-144.5489	21-2	0.41857
21	0.83713	SLV14-NL	Min	0.	-144.5489	21-3	0.
21	1.04642	SLV14-NL	Min	0.	-108.5755	21-3	0.20928
21	1.2557	SLV14-NL	Min	0.	-76.7054	21-3	0.41857
21	1.2557	SLV14-NL	Min	0.	-76.7054	21-4	0.
21	1.67427	SLV14-NL	Min	0.	-24.6646	21-4	0.41857
21	1.67427	SLV14-NL	Min	0.	-24.6646	21-5	0.
21	2.09284	SLV14-NL	Min	0.	12.7951	21-5	0.41857
21	0.	SLV15-NL	Max	0.	-356.5748	21-1	0.
21	0.41857	SLV15-NL	Max	0.	-244.2327	21-1	0.41857
21	0.41857	SLV15-NL	Max	0.	-244.2327	21-2	0.
21	0.83713	SLV15-NL	Max	0.	-151.8062	21-2	0.41857
21	0.83713	SLV15-NL	Max	0.	-151.8062	21-3	0.
21	1.04642	SLV15-NL	Max	0.	-112.6689	21-3	0.20928
21	1.2557	SLV15-NL	Max	0.	-78.039	21-3	0.41857
21	1.2557	SLV15-NL	Max	0.	-78.039	21-4	0.
21	1.67427	SLV15-NL	Max	0.	-21.6748	21-4	0.41857
21	1.67427	SLV15-NL	Max	0.	-21.6748	21-5	0.
21	2.09284	SLV15-NL	Max	0.	18.5427	21-5	0.41857
21	0.	SLV15-NL	Min	0.	-356.5748	21-1	0.
21	0.41857	SLV15-NL	Min	0.	-244.2327	21-1	0.41857
21	0.41857	SLV15-NL	Min	0.	-244.2327	21-2	0.
21	0.83713	SLV15-NL	Min	0.	-151.8062	21-2	0.41857

Table: Element Forces - Frames, Part 2 of 2

Frame	Station	OutputCase	StepType	M2	M3	FrameElem	ElemStation
	m			KN-m	KN-m		m
21	0.83713	SLV15-NL	Min	0.	-151.8062	21-3	0.
21	1.04642	SLV15-NL	Min	0.	-112.6689	21-3	0.20928
21	1.2557	SLV15-NL	Min	0.	-78.039	21-3	0.41857
21	1.2557	SLV15-NL	Min	0.	-78.039	21-4	0.
21	1.67427	SLV15-NL	Min	0.	-21.6748	21-4	0.41857
21	1.67427	SLV15-NL	Min	0.	-21.6748	21-5	0.
21	2.09284	SLV15-NL	Min	0.	18.5427	21-5	0.41857
21	0.	SLV16-NL	Max	0.	-377.2667	21-1	0.
21	0.41857	SLV16-NL	Max	0.	-262.1531	21-1	0.41857
21	0.41857	SLV16-NL	Max	0.	-262.1531	21-2	0.
21	0.83713	SLV16-NL	Max	0.	-166.5801	21-2	0.41857
21	0.83713	SLV16-NL	Max	0.	-166.5801	21-3	0.
21	1.04642	SLV16-NL	Max	0.	-125.7224	21-3	0.20928
21	1.2557	SLV16-NL	Max	0.	-89.2706	21-3	0.41857
21	1.2557	SLV16-NL	Max	0.	-89.2706	21-4	0.
21	1.67427	SLV16-NL	Max	0.	-28.9472	21-4	0.41857
21	1.67427	SLV16-NL	Max	0.	-28.9472	21-5	0.
21	2.09284	SLV16-NL	Max	0.	15.667	21-5	0.41857
21	0.	SLV16-NL	Min	0.	-377.2667	21-1	0.
21	0.41857	SLV16-NL	Min	0.	-262.1531	21-1	0.41857
21	0.41857	SLV16-NL	Min	0.	-262.1531	21-2	0.
21	0.83713	SLV16-NL	Min	0.	-166.5801	21-2	0.41857
21	0.83713	SLV16-NL	Min	0.	-166.5801	21-3	0.
21	1.04642	SLV16-NL	Min	0.	-125.7224	21-3	0.20928
21	1.2557	SLV16-NL	Min	0.	-89.2706	21-3	0.41857
21	1.2557	SLV16-NL	Min	0.	-89.2706	21-4	0.
21	1.67427	SLV16-NL	Min	0.	-28.9472	21-4	0.41857
21	1.67427	SLV16-NL	Min	0.	-28.9472	21-5	0.
21	2.09284	SLV16-NL	Min	0.	15.667	21-5	0.41857
26	0.	SLU 1-NL	Max	0.	21.9746	26-1	0.
26	0.23028	SLU 1-NL	Max	0.	54.4258	26-1	0.23028
26	0.46056	SLU 1-NL	Max	0.	79.9908	26-1	0.46056
26	0.	SLU 1-NL	Min	0.	21.9746	26-1	0.
26	0.23028	SLU 1-NL	Min	0.	54.4258	26-1	0.23028
26	0.46056	SLU 1-NL	Min	0.	79.9908	26-1	0.46056
26	0.	SLU 2-NL	Max	0.	30.3077	26-1	0.
26	0.23028	SLU 2-NL	Max	0.	72.5899	26-1	0.23028
26	0.46056	SLU 2-NL	Max	0.	108.2234	26-1	0.46056
26	0.	SLU 2-NL	Min	0.	30.3077	26-1	0.
26	0.23028	SLU 2-NL	Min	0.	72.5899	26-1	0.23028
26	0.46056	SLU 2-NL	Min	0.	108.2234	26-1	0.46056
26	0.	SLU 3-NL	Max	0.	7.121	26-1	0.
26	0.23028	SLU 3-NL	Max	0.	16.4699	26-1	0.23028
26	0.46056	SLU 3-NL	Max	0.	21.3637	26-1	0.46056
26	0.	SLU 3-NL	Min	0.	7.121	26-1	0.
26	0.23028	SLU 3-NL	Min	0.	16.4699	26-1	0.23028
26	0.46056	SLU 3-NL	Min	0.	21.3637	26-1	0.46056
26	0.	SLU 4-NL	Max	0.	37.6624	26-1	0.
26	0.23028	SLU 4-NL	Max	0.	69.8411	26-1	0.23028
26	0.46056	SLU 4-NL	Max	0.	95.1334	26-1	0.46056
26	0.	SLU 4-NL	Min	0.	37.6624	26-1	0.
26	0.23028	SLU 4-NL	Min	0.	69.8411	26-1	0.23028
26	0.46056	SLU 4-NL	Min	0.	95.1334	26-1	0.46056
26	0.	SLU 5-NL	Max	0.	22.2406	26-1	0.

Table: Element Forces - Frames, Part 2 of 2

Frame	Station	OutputCase	StepType	M2	M3	FrameElem	ElemStation
	m			KN-m	KN-m		m
26	0.23028	SLU 5-NL	Max	0.	30.5732	26-1	0.23028
26	0.46056	SLU 5-NL	Max	0.	34.4505	26-1	0.46056
26	0.	SLU 5-NL	Min	0.	22.2406	26-1	0.
26	0.23028	SLU 5-NL	Min	0.	30.5732	26-1	0.23028
26	0.46056	SLU 5-NL	Min	0.	34.4505	26-1	0.46056
26	0.	SLU 6-NL	Max	0.	2.6133	26-1	0.
26	0.23028	SLU 6-NL	Max	0.	37.2062	26-1	0.23028
26	0.46056	SLU 6-NL	Max	0.	65.1507	26-1	0.46056
26	0.	SLU 6-NL	Min	0.	2.6133	26-1	0.
26	0.23028	SLU 6-NL	Min	0.	37.2062	26-1	0.23028
26	0.46056	SLU 6-NL	Min	0.	65.1507	26-1	0.46056
26	0.	SLU 7-NL	Max	0.	-14.0243	26-1	0.
26	0.23028	SLU 7-NL	Max	0.	-3.1618	26-1	0.23028
26	0.46056	SLU 7-NL	Max	0.	3.4832	26-1	0.46056
26	0.	SLU 7-NL	Min	0.	-14.0243	26-1	0.
26	0.23028	SLU 7-NL	Min	0.	-3.1618	26-1	0.23028
26	0.46056	SLU 7-NL	Min	0.	3.4832	26-1	0.46056
26	0.	SLE-C-NL	Max	0.	16.7149	26-1	0.
26	0.23028	SLE-C-NL	Max	0.	40.9071	26-1	0.23028
26	0.46056	SLE-C-NL	Max	0.	59.9462	26-1	0.46056
26	0.	SLE-C-NL	Min	0.	16.7149	26-1	0.
26	0.23028	SLE-C-NL	Min	0.	40.9071	26-1	0.23028
26	0.46056	SLE-C-NL	Min	0.	59.9462	26-1	0.46056
26	0.	SLE-F-1-NL	Max	0.	17.5682	26-1	0.
26	0.23028	SLE-F-1-NL	Max	0.	43.1234	26-1	0.23028
26	0.46056	SLE-F-1-NL	Max	0.	63.7871	26-1	0.46056
26	0.	SLE-F-1-NL	Min	0.	17.5682	26-1	0.
26	0.23028	SLE-F-1-NL	Min	0.	43.1234	26-1	0.23028
26	0.46056	SLE-F-1-NL	Min	0.	63.7871	26-1	0.46056
26	0.	SLE-F-2-NL	Max	0.	20.0165	26-1	0.
26	0.23028	SLE-F-2-NL	Max	0.	36.9029	26-1	0.23028
26	0.46056	SLE-F-2-NL	Max	0.	49.4971	26-1	0.46056
26	0.	SLE-F-2-NL	Min	0.	20.0165	26-1	0.
26	0.23028	SLE-F-2-NL	Min	0.	36.9029	26-1	0.23028
26	0.46056	SLE-F-2-NL	Min	0.	49.4971	26-1	0.46056
26	0.	SLE-F-3-NL	Max	0.	8.0476	26-1	0.
26	0.23028	SLE-F-3-NL	Max	0.	25.7758	26-1	0.23028
26	0.46056	SLE-F-3-NL	Max	0.	39.2864	26-1	0.46056
26	0.	SLE-F-3-NL	Min	0.	8.0476	26-1	0.
26	0.23028	SLE-F-3-NL	Min	0.	25.7758	26-1	0.23028
26	0.46056	SLE-F-3-NL	Min	0.	39.2864	26-1	0.46056
26	0.	SLE-QP-NL	Max	0.	15.4434	26-1	0.
26	0.23028	SLE-QP-NL	Max	0.	34.6264	26-1	0.23028
26	0.46056	SLE-QP-NL	Max	0.	49.5917	26-1	0.46056
26	0.	SLE-QP-NL	Min	0.	15.4434	26-1	0.
26	0.23028	SLE-QP-NL	Min	0.	34.6264	26-1	0.23028
26	0.46056	SLE-QP-NL	Min	0.	49.5917	26-1	0.46056
26	0.	SLV1-NL	Max	0.	31.3463	26-1	0.
26	0.23028	SLV1-NL	Max	0.	41.9426	26-1	0.23028
26	0.46056	SLV1-NL	Max	0.	47.9085	26-1	0.46056
26	0.	SLV1-NL	Min	0.	31.3463	26-1	0.
26	0.23028	SLV1-NL	Min	0.	41.9426	26-1	0.23028
26	0.46056	SLV1-NL	Min	0.	47.9085	26-1	0.46056
26	0.	SLV2-NL	Max	0.	-12.7372	26-1	0.

Table: Element Forces - Frames, Part 2 of 2

Frame	Station	OutputCase	StepType	M2	M3	FrameElem	ElemStation
	m			KN-m	KN-m		m
26	0.23028	SLV2-NL	Max	0.	7.8179	26-1	0.23028
26	0.46056	SLV2-NL	Max	0.	24.2473	26-1	0.46056
26	0.	SLV2-NL	Min	0.	-12.7372	26-1	0.
26	0.23028	SLV2-NL	Min	0.	7.8179	26-1	0.23028
26	0.46056	SLV2-NL	Min	0.	24.2473	26-1	0.46056
26	0.	SLV3-NL	Max	0.	31.0395	26-1	0.
26	0.23028	SLV3-NL	Max	0.	42.0702	26-1	0.23028
26	0.46056	SLV3-NL	Max	0.	48.4171	26-1	0.46056
26	0.	SLV3-NL	Min	0.	31.0395	26-1	0.
26	0.23028	SLV3-NL	Min	0.	42.0702	26-1	0.23028
26	0.46056	SLV3-NL	Min	0.	48.4171	26-1	0.46056
26	0.	SLV4-NL	Max	0.	-13.0347	26-1	0.
26	0.23028	SLV4-NL	Max	0.	7.9539	26-1	0.23028
26	0.46056	SLV4-NL	Max	0.	24.7634	26-1	0.46056
26	0.	SLV4-NL	Min	0.	-13.0347	26-1	0.
26	0.23028	SLV4-NL	Min	0.	7.9539	26-1	0.23028
26	0.46056	SLV4-NL	Min	0.	24.7634	26-1	0.46056
26	0.	SLV5-NL	Max	0.	21.2484	26-1	0.
26	0.23028	SLV5-NL	Max	0.	38.2922	26-1	0.23028
26	0.46056	SLV5-NL	Max	0.	50.9443	26-1	0.46056
26	0.	SLV5-NL	Min	0.	21.2484	26-1	0.
26	0.23028	SLV5-NL	Min	0.	38.2922	26-1	0.23028
26	0.46056	SLV5-NL	Min	0.	50.9443	26-1	0.46056
26	0.	SLV6-NL	Max	0.	8.4788	26-1	0.
26	0.23028	SLV6-NL	Max	0.	28.4676	26-1	0.23028
26	0.46056	SLV6-NL	Max	0.	44.2161	26-1	0.46056
26	0.	SLV6-NL	Min	0.	8.4788	26-1	0.
26	0.23028	SLV6-NL	Min	0.	28.4676	26-1	0.23028
26	0.46056	SLV6-NL	Min	0.	44.2161	26-1	0.46056
26	0.	SLV7-NL	Max	0.	20.2196	26-1	0.
26	0.23028	SLV7-NL	Max	0.	38.7116	26-1	0.23028
26	0.46056	SLV7-NL	Max	0.	52.6342	26-1	0.46056
26	0.	SLV7-NL	Min	0.	20.2196	26-1	0.
26	0.23028	SLV7-NL	Min	0.	38.7116	26-1	0.23028
26	0.46056	SLV7-NL	Min	0.	52.6342	26-1	0.46056
26	0.	SLV8-NL	Max	0.	7.4942	26-1	0.
26	0.23028	SLV8-NL	Max	0.	28.927	26-1	0.23028
26	0.46056	SLV8-NL	Max	0.	45.9419	26-1	0.46056
26	0.	SLV8-NL	Min	0.	7.4942	26-1	0.
26	0.23028	SLV8-NL	Min	0.	28.927	26-1	0.23028
26	0.46056	SLV8-NL	Min	0.	45.9419	26-1	0.46056
26	0.	SLV9-NL	Max	0.	19.5584	26-1	0.
26	0.23028	SLV9-NL	Max	0.	33.8808	26-1	0.23028
26	0.46056	SLV9-NL	Max	0.	43.6895	26-1	0.46056
26	0.	SLV9-NL	Min	0.	19.5584	26-1	0.
26	0.23028	SLV9-NL	Min	0.	33.8808	26-1	0.23028
26	0.46056	SLV9-NL	Min	0.	43.6895	26-1	0.46056
26	0.	SLV10-NL	Max	0.	7.74	26-1	0.
26	0.23028	SLV10-NL	Max	0.	30.1026	26-1	0.23028
26	0.46056	SLV10-NL	Max	0.	48.2757	26-1	0.46056
26	0.	SLV10-NL	Min	0.	7.74	26-1	0.
26	0.23028	SLV10-NL	Min	0.	30.1026	26-1	0.23028
26	0.46056	SLV10-NL	Min	0.	48.2757	26-1	0.46056
26	0.	SLV11-NL	Max	0.	20.4067	26-1	0.

Table: Element Forces - Frames, Part 2 of 2

Frame	Station	OutputCase	StepType	M2	M3	FrameElem	ElemStation
	m			KN-m	KN-m		m
26	0.23028	SLV11-NL	Max	0.	35.8483	26-1	0.23028
26	0.46056	SLV11-NL	Max	0.	46.6698	26-1	0.46056
26	0.	SLV11-NL	Min	0.	20.4067	26-1	0.
26	0.23028	SLV11-NL	Min	0.	35.8483	26-1	0.23028
26	0.46056	SLV11-NL	Min	0.	46.6698	26-1	0.46056
26	0.	SLV12-NL	Max	0.	8.6373	26-1	0.
26	0.23028	SLV12-NL	Max	0.	32.1144	26-1	0.23028
26	0.46056	SLV12-NL	Max	0.	51.2956	26-1	0.46056
26	0.	SLV12-NL	Min	0.	8.6373	26-1	0.
26	0.23028	SLV12-NL	Min	0.	32.1144	26-1	0.23028
26	0.46056	SLV12-NL	Min	0.	51.2956	26-1	0.46056
26	0.	SLV13-NL	Max	0.	15.9538	26-1	0.
26	0.23028	SLV13-NL	Max	0.	33.0767	26-1	0.23028
26	0.46056	SLV13-NL	Max	0.	45.9234	26-1	0.46056
26	0.	SLV13-NL	Min	0.	15.9538	26-1	0.
26	0.23028	SLV13-NL	Min	0.	33.0767	26-1	0.23028
26	0.46056	SLV13-NL	Min	0.	45.9234	26-1	0.46056
26	0.	SLV14-NL	Max	0.	12.7951	26-1	0.
26	0.23028	SLV14-NL	Max	0.	32.2575	26-1	0.23028
26	0.46056	SLV14-NL	Max	0.	47.541	26-1	0.46056
26	0.	SLV14-NL	Min	0.	12.7951	26-1	0.
26	0.23028	SLV14-NL	Min	0.	32.2575	26-1	0.23028
26	0.46056	SLV14-NL	Min	0.	47.541	26-1	0.46056
26	0.	SLV15-NL	Max	0.	18.5427	26-1	0.
26	0.23028	SLV15-NL	Max	0.	39.3452	26-1	0.23028
26	0.46056	SLV15-NL	Max	0.	55.5169	26-1	0.46056
26	0.	SLV15-NL	Min	0.	18.5427	26-1	0.
26	0.23028	SLV15-NL	Min	0.	39.3452	26-1	0.23028
26	0.46056	SLV15-NL	Min	0.	55.5169	26-1	0.46056
26	0.	SLV16-NL	Max	0.	15.667	26-1	0.
26	0.23028	SLV16-NL	Max	0.	38.7578	26-1	0.23028
26	0.46056	SLV16-NL	Max	0.	57.315	26-1	0.46056
26	0.	SLV16-NL	Min	0.	15.667	26-1	0.
26	0.23028	SLV16-NL	Min	0.	38.7578	26-1	0.23028
26	0.46056	SLV16-NL	Min	0.	57.315	26-1	0.46056
27	0.	SLU 1-NL	Max	0.	79.9908	27-1	0.
27	0.23028	SLU 1-NL	Max	0.	107.0447	27-1	0.23028
27	0.46056	SLU 1-NL	Max	0.	127.1224	27-1	0.46056
27	0.	SLU 1-NL	Min	0.	79.9908	27-1	0.
27	0.23028	SLU 1-NL	Min	0.	107.0447	27-1	0.23028
27	0.46056	SLU 1-NL	Min	0.	127.1224	27-1	0.46056
27	0.	SLU 2-NL	Max	0.	108.2234	27-1	0.
27	0.23028	SLU 2-NL	Max	0.	143.3899	27-1	0.23028
27	0.46056	SLU 2-NL	Max	0.	171.7248	27-1	0.46056
27	0.	SLU 2-NL	Min	0.	108.2234	27-1	0.
27	0.23028	SLU 2-NL	Min	0.	143.3899	27-1	0.23028
27	0.46056	SLU 2-NL	Min	0.	171.7248	27-1	0.46056
27	0.	SLU 3-NL	Max	0.	21.3637	27-1	0.
27	0.23028	SLU 3-NL	Max	0.	29.1505	27-1	0.23028
27	0.46056	SLU 3-NL	Max	0.	32.5609	27-1	0.46056
27	0.	SLU 3-NL	Min	0.	21.3637	27-1	0.
27	0.23028	SLU 3-NL	Min	0.	29.1505	27-1	0.23028
27	0.46056	SLU 3-NL	Min	0.	32.5609	27-1	0.46056
27	0.	SLU 4-NL	Max	0.	95.1334	27-1	0.

Table: Element Forces - Frames, Part 2 of 2

Frame	Station	OutputCase	StepType	M2	M3	FrameElem	ElemStation
	m			KN-m	KN-m		m
27	0.23028	SLU 4-NL	Max	0.	121.5044	27-1	0.23028
27	0.46056	SLU 4-NL	Max	0.	140.8992	27-1	0.46056
27	0.	SLU 4-NL	Min	0.	95.1334	27-1	0.
27	0.23028	SLU 4-NL	Min	0.	121.5044	27-1	0.23028
27	0.46056	SLU 4-NL	Min	0.	140.8992	27-1	0.46056
27	0.	SLU 5-NL	Max	0.	34.4505	27-1	0.
27	0.23028	SLU 5-NL	Max	0.	40.9534	27-1	0.23028
27	0.46056	SLU 5-NL	Max	0.	43.0797	27-1	0.46056
27	0.	SLU 5-NL	Min	0.	34.4505	27-1	0.
27	0.23028	SLU 5-NL	Min	0.	40.9534	27-1	0.23028
27	0.46056	SLU 5-NL	Min	0.	43.0797	27-1	0.46056
27	0.	SLU 6-NL	Max	0.	65.1507	27-1	0.
27	0.23028	SLU 6-NL	Max	0.	94.716	27-1	0.23028
27	0.46056	SLU 6-NL	Max	0.	117.4499	27-1	0.46056
27	0.	SLU 6-NL	Min	0.	65.1507	27-1	0.
27	0.23028	SLU 6-NL	Min	0.	94.716	27-1	0.23028
27	0.46056	SLU 6-NL	Min	0.	117.4499	27-1	0.46056
27	0.	SLU 7-NL	Max	0.	3.4832	27-1	0.
27	0.23028	SLU 7-NL	Max	0.	13.2999	27-1	0.23028
27	0.46056	SLU 7-NL	Max	0.	18.8847	27-1	0.46056
27	0.	SLU 7-NL	Min	0.	3.4832	27-1	0.
27	0.23028	SLU 7-NL	Min	0.	13.2999	27-1	0.23028
27	0.46056	SLU 7-NL	Min	0.	18.8847	27-1	0.46056
27	0.	SLE-C-NL	Max	0.	59.9462	27-1	0.
27	0.23028	SLE-C-NL	Max	0.	80.1027	27-1	0.23028
27	0.46056	SLE-C-NL	Max	0.	95.0442	27-1	0.46056
27	0.	SLE-C-NL	Min	0.	59.9462	27-1	0.
27	0.23028	SLE-C-NL	Min	0.	80.1027	27-1	0.23028
27	0.46056	SLE-C-NL	Min	0.	95.0442	27-1	0.46056
27	0.	SLE-F-1-NL	Max	0.	63.7871	27-1	0.
27	0.23028	SLE-F-1-NL	Max	0.	85.0708	27-1	0.23028
27	0.46056	SLE-F-1-NL	Max	0.	101.3826	27-1	0.46056
27	0.	SLE-F-1-NL	Min	0.	63.7871	27-1	0.
27	0.23028	SLE-F-1-NL	Min	0.	85.0708	27-1	0.23028
27	0.46056	SLE-F-1-NL	Min	0.	101.3826	27-1	0.46056
27	0.	SLE-F-2-NL	Max	0.	49.4971	27-1	0.
27	0.23028	SLE-F-2-NL	Max	0.	63.3168	27-1	0.23028
27	0.46056	SLE-F-2-NL	Max	0.	72.8578	27-1	0.46056
27	0.	SLE-F-2-NL	Min	0.	49.4971	27-1	0.
27	0.23028	SLE-F-2-NL	Min	0.	63.3168	27-1	0.23028
27	0.46056	SLE-F-2-NL	Min	0.	72.8578	27-1	0.46056
27	0.	SLE-F-3-NL	Max	0.	39.2864	27-1	0.
27	0.23028	SLE-F-3-NL	Max	0.	54.1999	27-1	0.23028
27	0.46056	SLE-F-3-NL	Max	0.	64.8812	27-1	0.46056
27	0.	SLE-F-3-NL	Min	0.	39.2864	27-1	0.
27	0.23028	SLE-F-3-NL	Min	0.	54.1999	27-1	0.23028
27	0.46056	SLE-F-3-NL	Min	0.	64.8812	27-1	0.46056
27	0.	SLE-QP-NL	Max	0.	49.5917	27-1	0.
27	0.23028	SLE-QP-NL	Max	0.	65.4946	27-1	0.23028
27	0.46056	SLE-QP-NL	Max	0.	77.1653	27-1	0.46056
27	0.	SLE-QP-NL	Min	0.	49.5917	27-1	0.
27	0.23028	SLE-QP-NL	Min	0.	65.4946	27-1	0.23028
27	0.46056	SLE-QP-NL	Min	0.	77.1653	27-1	0.46056
27	0.	SLV1-NL	Max	0.	47.9085	27-1	0.

Table: Element Forces - Frames, Part 2 of 2

Frame	Station	OutputCase	StepType	M2	M3	FrameElem	ElemStation
	m			KN-m	KN-m		m
27	0.23028	SLV1-NL	Max	0.	56.0392	27-1	0.23028
27	0.46056	SLV1-NL	Max	0.	59.6064	27-1	0.46056
27	0.	SLV1-NL	Min	0.	47.9085	27-1	0.
27	0.23028	SLV1-NL	Min	0.	56.0392	27-1	0.23028
27	0.46056	SLV1-NL	Min	0.	59.6064	27-1	0.46056
27	0.	SLV2-NL	Max	0.	24.2473	27-1	0.
27	0.23028	SLV2-NL	Max	0.	42.3114	27-1	0.23028
27	0.46056	SLV2-NL	Max	0.	56.1415	27-1	0.46056
27	0.	SLV2-NL	Min	0.	24.2473	27-1	0.
27	0.23028	SLV2-NL	Min	0.	42.3114	27-1	0.23028
27	0.46056	SLV2-NL	Min	0.	56.1415	27-1	0.46056
27	0.	SLV3-NL	Max	0.	48.4171	27-1	0.
27	0.23028	SLV3-NL	Max	0.	56.9229	27-1	0.23028
27	0.46056	SLV3-NL	Max	0.	60.8053	27-1	0.46056
27	0.	SLV3-NL	Min	0.	48.4171	27-1	0.
27	0.23028	SLV3-NL	Min	0.	56.9229	27-1	0.23028
27	0.46056	SLV3-NL	Min	0.	60.8053	27-1	0.46056
27	0.	SLV4-NL	Max	0.	24.7634	27-1	0.
27	0.23028	SLV4-NL	Max	0.	43.2016	27-1	0.23028
27	0.46056	SLV4-NL	Max	0.	57.346	27-1	0.46056
27	0.	SLV4-NL	Min	0.	24.7634	27-1	0.
27	0.23028	SLV4-NL	Min	0.	43.2016	27-1	0.23028
27	0.46056	SLV4-NL	Min	0.	57.346	27-1	0.46056
27	0.	SLV5-NL	Max	0.	50.9443	27-1	0.
27	0.23028	SLV5-NL	Max	0.	64.8591	27-1	0.23028
27	0.46056	SLV5-NL	Max	0.	74.3955	27-1	0.46056
27	0.	SLV5-NL	Min	0.	50.9443	27-1	0.
27	0.23028	SLV5-NL	Min	0.	64.8591	27-1	0.23028
27	0.46056	SLV5-NL	Min	0.	74.3955	27-1	0.46056
27	0.	SLV6-NL	Max	0.	44.2161	27-1	0.
27	0.23028	SLV6-NL	Max	0.	61.0662	27-1	0.23028
27	0.46056	SLV6-NL	Max	0.	73.6368	27-1	0.46056
27	0.	SLV6-NL	Min	0.	44.2161	27-1	0.
27	0.23028	SLV6-NL	Min	0.	61.0662	27-1	0.23028
27	0.46056	SLV6-NL	Min	0.	73.6368	27-1	0.46056
27	0.	SLV7-NL	Max	0.	52.6342	27-1	0.
27	0.23028	SLV7-NL	Max	0.	67.7996	27-1	0.23028
27	0.46056	SLV7-NL	Max	0.	78.387	27-1	0.46056
27	0.	SLV7-NL	Min	0.	52.6342	27-1	0.
27	0.23028	SLV7-NL	Min	0.	67.7996	27-1	0.23028
27	0.46056	SLV7-NL	Min	0.	78.387	27-1	0.46056
27	0.	SLV8-NL	Max	0.	45.9419	27-1	0.
27	0.23028	SLV8-NL	Max	0.	64.0382	27-1	0.23028
27	0.46056	SLV8-NL	Max	0.	77.6554	27-1	0.46056
27	0.	SLV8-NL	Min	0.	45.9419	27-1	0.
27	0.23028	SLV8-NL	Min	0.	64.0382	27-1	0.23028
27	0.46056	SLV8-NL	Min	0.	77.6554	27-1	0.46056
27	0.	SLV9-NL	Max	0.	43.6895	27-1	0.
27	0.23028	SLV9-NL	Max	0.	55.3639	27-1	0.23028
27	0.46056	SLV9-NL	Max	0.	62.5738	27-1	0.46056
27	0.	SLV9-NL	Min	0.	43.6895	27-1	0.
27	0.23028	SLV9-NL	Min	0.	55.3639	27-1	0.23028
27	0.46056	SLV9-NL	Min	0.	62.5738	27-1	0.46056
27	0.	SLV10-NL	Max	0.	48.2757	27-1	0.

Table: Element Forces - Frames, Part 2 of 2

Frame	Station	OutputCase	StepType	M2	M3	FrameElem	ElemStation
	m			KN-m	KN-m		m
27	0.23028	SLV10-NL	Max	0.	67.145	27-1	0.23028
27	0.46056	SLV10-NL	Max	0.	81.7368	27-1	0.46056
27	0.	SLV10-NL	Min	0.	48.2757	27-1	0.
27	0.23028	SLV10-NL	Min	0.	67.145	27-1	0.23028
27	0.46056	SLV10-NL	Min	0.	81.7368	27-1	0.46056
27	0.	SLV11-NL	Max	0.	46.6698	27-1	0.
27	0.23028	SLV11-NL	Max	0.	59.2794	27-1	0.23028
27	0.46056	SLV11-NL	Max	0.	67.309	27-1	0.46056
27	0.	SLV11-NL	Min	0.	46.6698	27-1	0.
27	0.23028	SLV11-NL	Min	0.	59.2794	27-1	0.23028
27	0.46056	SLV11-NL	Min	0.	67.309	27-1	0.46056
27	0.	SLV12-NL	Max	0.	51.2956	27-1	0.
27	0.23028	SLV12-NL	Max	0.	71.0952	27-1	0.23028
27	0.46056	SLV12-NL	Max	0.	86.5018	27-1	0.46056
27	0.	SLV12-NL	Min	0.	51.2956	27-1	0.
27	0.23028	SLV12-NL	Min	0.	71.0952	27-1	0.23028
27	0.46056	SLV12-NL	Min	0.	86.5018	27-1	0.46056
27	0.	SLV13-NL	Max	0.	45.9234	27-1	0.
27	0.23028	SLV13-NL	Max	0.	60.0519	27-1	0.23028
27	0.46056	SLV13-NL	Max	0.	69.916	27-1	0.46056
27	0.	SLV13-NL	Min	0.	45.9234	27-1	0.
27	0.23028	SLV13-NL	Min	0.	60.0519	27-1	0.23028
27	0.46056	SLV13-NL	Min	0.	69.916	27-1	0.46056
27	0.	SLV14-NL	Max	0.	47.541	27-1	0.
27	0.23028	SLV14-NL	Max	0.	63.7594	27-1	0.23028
27	0.46056	SLV14-NL	Max	0.	75.7696	27-1	0.46056
27	0.	SLV14-NL	Min	0.	47.541	27-1	0.
27	0.23028	SLV14-NL	Min	0.	63.7594	27-1	0.23028
27	0.46056	SLV14-NL	Min	0.	75.7696	27-1	0.46056
27	0.	SLV15-NL	Max	0.	55.5169	27-1	0.
27	0.23028	SLV15-NL	Max	0.	72.7244	27-1	0.23028
27	0.46056	SLV15-NL	Max	0.	85.2826	27-1	0.46056
27	0.	SLV15-NL	Min	0.	55.5169	27-1	0.
27	0.23028	SLV15-NL	Min	0.	72.7244	27-1	0.23028
27	0.46056	SLV15-NL	Min	0.	85.2826	27-1	0.46056
27	0.	SLV16-NL	Max	0.	57.315	27-1	0.
27	0.23028	SLV16-NL	Max	0.	76.5643	27-1	0.23028
27	0.46056	SLV16-NL	Max	0.	91.2206	27-1	0.46056
27	0.	SLV16-NL	Min	0.	57.315	27-1	0.
27	0.23028	SLV16-NL	Min	0.	76.5643	27-1	0.23028
27	0.46056	SLV16-NL	Min	0.	91.2206	27-1	0.46056
28	0.	SLU 1-NL	Max	0.	127.1224	28-1	0.
28	0.23028	SLU 1-NL	Max	0.	148.0274	28-1	0.23028
28	0.46056	SLU 1-NL	Max	0.	161.8935	28-1	0.46056
28	0.	SLU 1-NL	Min	0.	127.1224	28-1	0.
28	0.23028	SLU 1-NL	Min	0.	148.0274	28-1	0.23028
28	0.46056	SLU 1-NL	Min	0.	161.8935	28-1	0.46056
28	0.	SLU 2-NL	Max	0.	171.7248	28-1	0.
28	0.23028	SLU 2-NL	Max	0.	198.6814	28-1	0.23028
28	0.46056	SLU 2-NL	Max	0.	218.6734	28-1	0.46056
28	0.	SLU 2-NL	Min	0.	171.7248	28-1	0.
28	0.23028	SLU 2-NL	Min	0.	198.6814	28-1	0.23028
28	0.46056	SLU 2-NL	Min	0.	218.6734	28-1	0.46056
28	0.	SLU 3-NL	Max	0.	32.5609	28-1	0.

Table: Element Forces - Frames, Part 2 of 2

Frame	Station	OutputCase	StepType	M2	M3	FrameElem	ElemStation
	m			KN-m	KN-m		m
28	0.23028	SLU 3-NL	Max	0.	38.7511	28-1	0.23028
28	0.46056	SLU 3-NL	Max	0.	40.6303	28-1	0.46056
28	0.	SLU 3-NL	Min	0.	32.5609	28-1	0.
28	0.23028	SLU 3-NL	Min	0.	38.7511	28-1	0.23028
28	0.46056	SLU 3-NL	Min	0.	40.6303	28-1	0.46056
28	0.	SLU 4-NL	Max	0.	140.8992	28-1	0.
28	0.23028	SLU 4-NL	Max	0.	160.719	28-1	0.23028
28	0.46056	SLU 4-NL	Max	0.	173.5	28-1	0.46056
28	0.	SLU 4-NL	Min	0.	140.8992	28-1	0.
28	0.23028	SLU 4-NL	Min	0.	160.719	28-1	0.23028
28	0.46056	SLU 4-NL	Min	0.	173.5	28-1	0.46056
28	0.	SLU 5-NL	Max	0.	43.0797	28-1	0.
28	0.23028	SLU 5-NL	Max	0.	47.7326	28-1	0.23028
28	0.46056	SLU 5-NL	Max	0.	48.0746	28-1	0.46056
28	0.	SLU 5-NL	Min	0.	43.0797	28-1	0.
28	0.23028	SLU 5-NL	Min	0.	47.7326	28-1	0.23028
28	0.46056	SLU 5-NL	Min	0.	48.0746	28-1	0.46056
28	0.	SLU 6-NL	Max	0.	117.4499	28-1	0.
28	0.23028	SLU 6-NL	Max	0.	140.9537	28-1	0.23028
28	0.46056	SLU 6-NL	Max	0.	157.4928	28-1	0.46056
28	0.	SLU 6-NL	Min	0.	117.4499	28-1	0.
28	0.23028	SLU 6-NL	Min	0.	140.9537	28-1	0.23028
28	0.46056	SLU 6-NL	Min	0.	157.4928	28-1	0.46056
28	0.	SLU 7-NL	Max	0.	18.8847	28-1	0.
28	0.23028	SLU 7-NL	Max	0.	27.3441	28-1	0.23028
28	0.46056	SLU 7-NL	Max	0.	31.5668	28-1	0.46056
28	0.	SLU 7-NL	Min	0.	18.8847	28-1	0.
28	0.23028	SLU 7-NL	Min	0.	27.3441	28-1	0.23028
28	0.46056	SLU 7-NL	Min	0.	31.5668	28-1	0.46056
28	0.	SLE-C-NL	Max	0.	95.0442	28-1	0.
28	0.23028	SLE-C-NL	Max	0.	110.6136	28-1	0.23028
28	0.46056	SLE-C-NL	Max	0.	120.9257	28-1	0.46056
28	0.	SLE-C-NL	Min	0.	95.0442	28-1	0.
28	0.23028	SLE-C-NL	Min	0.	110.6136	28-1	0.23028
28	0.46056	SLE-C-NL	Min	0.	120.9257	28-1	0.46056
28	0.	SLE-F-1-NL	Max	0.	101.3826	28-1	0.
28	0.23028	SLE-F-1-NL	Max	0.	117.7779	28-1	0.23028
28	0.46056	SLE-F-1-NL	Max	0.	129.1442	28-1	0.46056
28	0.	SLE-F-1-NL	Min	0.	101.3826	28-1	0.
28	0.23028	SLE-F-1-NL	Min	0.	117.7779	28-1	0.23028
28	0.46056	SLE-F-1-NL	Min	0.	129.1442	28-1	0.46056
28	0.	SLE-F-2-NL	Max	0.	72.8578	28-1	0.
28	0.23028	SLE-F-2-NL	Max	0.	83.3346	28-1	0.23028
28	0.46056	SLE-F-2-NL	Max	0.	89.5501	28-1	0.46056
28	0.	SLE-F-2-NL	Min	0.	72.8578	28-1	0.
28	0.23028	SLE-F-2-NL	Min	0.	83.3346	28-1	0.23028
28	0.46056	SLE-F-2-NL	Min	0.	89.5501	28-1	0.46056
28	0.	SLE-F-3-NL	Max	0.	64.8812	28-1	0.
28	0.23028	SLE-F-3-NL	Max	0.	76.6128	28-1	0.23028
28	0.46056	SLE-F-3-NL	Max	0.	84.1074	28-1	0.46056
28	0.	SLE-F-3-NL	Min	0.	64.8812	28-1	0.
28	0.23028	SLE-F-3-NL	Min	0.	76.6128	28-1	0.23028
28	0.46056	SLE-F-3-NL	Min	0.	84.1074	28-1	0.46056
28	0.	SLE-QP-NL	Max	0.	77.1653	28-1	0.

Table: Element Forces - Frames, Part 2 of 2

Frame	Station	OutputCase	StepType	M2	M3	FrameElem	ElemStation
	m			KN-m	KN-m		m
28	0.23028	SLE-QP-NL	Max	0.	89.4102	28-1	0.23028
28	0.46056	SLE-QP-NL	Max	0.	97.4179	28-1	0.46056
28	0.	SLE-QP-NL	Min	0.	77.1653	28-1	0.
28	0.23028	SLE-QP-NL	Min	0.	89.4102	28-1	0.23028
28	0.46056	SLE-QP-NL	Min	0.	97.4179	28-1	0.46056
28	0.	SLV1-NL	Max	0.	59.6064	28-1	0.
28	0.23028	SLV1-NL	Max	0.	65.22	28-1	0.23028
28	0.46056	SLV1-NL	Max	0.	66.332	28-1	0.46056
28	0.	SLV1-NL	Min	0.	59.6064	28-1	0.
28	0.23028	SLV1-NL	Min	0.	65.22	28-1	0.23028
28	0.46056	SLV1-NL	Min	0.	66.332	28-1	0.46056
28	0.	SLV2-NL	Max	0.	56.1415	28-1	0.
28	0.23028	SLV2-NL	Max	0.	71.038	28-1	0.23028
28	0.46056	SLV2-NL	Max	0.	81.619	28-1	0.46056
28	0.	SLV2-NL	Min	0.	56.1415	28-1	0.
28	0.23028	SLV2-NL	Min	0.	71.038	28-1	0.23028
28	0.46056	SLV2-NL	Min	0.	81.619	28-1	0.46056
28	0.	SLV3-NL	Max	0.	60.8053	28-1	0.
28	0.23028	SLV3-NL	Max	0.	66.7136	28-1	0.23028
28	0.46056	SLV3-NL	Max	0.	68.0552	28-1	0.46056
28	0.	SLV3-NL	Min	0.	60.8053	28-1	0.
28	0.23028	SLV3-NL	Min	0.	66.7136	28-1	0.23028
28	0.46056	SLV3-NL	Min	0.	68.0552	28-1	0.46056
28	0.	SLV4-NL	Max	0.	57.346	28-1	0.
28	0.23028	SLV4-NL	Max	0.	72.5362	28-1	0.23028
28	0.46056	SLV4-NL	Max	0.	83.3459	28-1	0.46056
28	0.	SLV4-NL	Min	0.	57.346	28-1	0.
28	0.23028	SLV4-NL	Min	0.	72.5362	28-1	0.23028
28	0.46056	SLV4-NL	Min	0.	83.3459	28-1	0.46056
28	0.	SLV5-NL	Max	0.	74.3955	28-1	0.
28	0.23028	SLV5-NL	Max	0.	84.9054	28-1	0.23028
28	0.46056	SLV5-NL	Max	0.	91.0548	28-1	0.46056
28	0.	SLV5-NL	Min	0.	74.3955	28-1	0.
28	0.23028	SLV5-NL	Min	0.	84.9054	28-1	0.23028
28	0.46056	SLV5-NL	Min	0.	91.0548	28-1	0.46056
28	0.	SLV6-NL	Max	0.	73.6368	28-1	0.
28	0.23028	SLV6-NL	Max	0.	86.8853	28-1	0.23028
28	0.46056	SLV6-NL	Max	0.	95.8291	28-1	0.46056
28	0.	SLV6-NL	Min	0.	73.6368	28-1	0.
28	0.23028	SLV6-NL	Min	0.	86.8853	28-1	0.23028
28	0.46056	SLV6-NL	Min	0.	95.8291	28-1	0.46056
28	0.	SLV7-NL	Max	0.	78.387	28-1	0.
28	0.23028	SLV7-NL	Max	0.	89.8798	28-1	0.23028
28	0.46056	SLV7-NL	Max	0.	96.7951	28-1	0.46056
28	0.	SLV7-NL	Min	0.	78.387	28-1	0.
28	0.23028	SLV7-NL	Min	0.	89.8798	28-1	0.23028
28	0.46056	SLV7-NL	Min	0.	96.7951	28-1	0.46056
28	0.	SLV8-NL	Max	0.	77.6554	28-1	0.
28	0.23028	SLV8-NL	Max	0.	91.8823	28-1	0.23028
28	0.46056	SLV8-NL	Max	0.	101.5876	28-1	0.46056
28	0.	SLV8-NL	Min	0.	77.6554	28-1	0.
28	0.23028	SLV8-NL	Min	0.	91.8823	28-1	0.23028
28	0.46056	SLV8-NL	Min	0.	101.5876	28-1	0.46056
28	0.	SLV9-NL	Max	0.	62.5738	28-1	0.

Table: Element Forces - Frames, Part 2 of 2

Frame	Station	OutputCase	StepType	M2	M3	FrameElem	ElemStation
	m			KN-m	KN-m		m
28	0.23028	SLV9-NL	Max	0.	71.4366	28-1	0.23028
28	0.46056	SLV9-NL	Max	0.	75.8779	28-1	0.46056
28	0.	SLV9-NL	Min	0.	62.5738	28-1	0.
28	0.23028	SLV9-NL	Min	0.	71.4366	28-1	0.23028
28	0.46056	SLV9-NL	Min	0.	75.8779	28-1	0.46056
28	0.	SLV10-NL	Max	0.	81.7368	28-1	0.
28	0.23028	SLV10-NL	Max	0.	96.5095	28-1	0.23028
28	0.46056	SLV10-NL	Max	0.	106.9441	28-1	0.46056
28	0.	SLV10-NL	Min	0.	81.7368	28-1	0.
28	0.23028	SLV10-NL	Min	0.	96.5095	28-1	0.23028
28	0.46056	SLV10-NL	Min	0.	106.9441	28-1	0.46056
28	0.	SLV11-NL	Max	0.	67.309	28-1	0.
28	0.23028	SLV11-NL	Max	0.	76.8868	28-1	0.23028
28	0.46056	SLV11-NL	Max	0.	81.9206	28-1	0.46056
28	0.	SLV11-NL	Min	0.	67.309	28-1	0.
28	0.23028	SLV11-NL	Min	0.	76.8868	28-1	0.23028
28	0.46056	SLV11-NL	Min	0.	81.9206	28-1	0.46056
28	0.	SLV12-NL	Max	0.	86.5018	28-1	0.
28	0.23028	SLV12-NL	Max	0.	101.9846	28-1	0.23028
28	0.46056	SLV12-NL	Max	0.	113.0066	28-1	0.46056
28	0.	SLV12-NL	Min	0.	86.5018	28-1	0.
28	0.23028	SLV12-NL	Min	0.	101.9846	28-1	0.23028
28	0.46056	SLV12-NL	Min	0.	113.0066	28-1	0.46056
28	0.	SLV13-NL	Max	0.	69.916	28-1	0.
28	0.23028	SLV13-NL	Max	0.	80.7634	28-1	0.23028
28	0.46056	SLV13-NL	Max	0.	87.3616	28-1	0.46056
28	0.	SLV13-NL	Min	0.	69.916	28-1	0.
28	0.23028	SLV13-NL	Min	0.	80.7634	28-1	0.23028
28	0.46056	SLV13-NL	Min	0.	87.3616	28-1	0.46056
28	0.	SLV14-NL	Max	0.	75.7696	28-1	0.
28	0.23028	SLV14-NL	Max	0.	88.3264	28-1	0.23028
28	0.46056	SLV14-NL	Max	0.	96.6589	28-1	0.46056
28	0.	SLV14-NL	Min	0.	75.7696	28-1	0.
28	0.23028	SLV14-NL	Min	0.	88.3264	28-1	0.23028
28	0.46056	SLV14-NL	Min	0.	96.6589	28-1	0.46056
28	0.	SLV15-NL	Max	0.	85.2826	28-1	0.
28	0.23028	SLV15-NL	Max	0.	98.4888	28-1	0.23028
28	0.46056	SLV15-NL	Max	0.	107.0369	28-1	0.46056
28	0.	SLV15-NL	Min	0.	85.2826	28-1	0.
28	0.23028	SLV15-NL	Min	0.	98.4888	28-1	0.23028
28	0.46056	SLV15-NL	Min	0.	107.0369	28-1	0.46056
28	0.	SLV16-NL	Max	0.	91.2206	28-1	0.
28	0.23028	SLV16-NL	Max	0.	106.0917	28-1	0.23028
28	0.46056	SLV16-NL	Max	0.	116.3297	28-1	0.46056
28	0.	SLV16-NL	Min	0.	91.2206	28-1	0.
28	0.23028	SLV16-NL	Min	0.	106.0917	28-1	0.23028
28	0.46056	SLV16-NL	Min	0.	116.3297	28-1	0.46056
29	0.	SLU 1-NL	Max	0.	161.8935	29-1	0.
29	0.23028	SLU 1-NL	Max	0.	176.0722	29-1	0.23028
29	0.46056	SLU 1-NL	Max	0.	183.173	29-1	0.46056
29	0.	SLU 1-NL	Min	0.	161.8935	29-1	0.
29	0.23028	SLU 1-NL	Min	0.	176.0722	29-1	0.23028
29	0.46056	SLU 1-NL	Min	0.	183.173	29-1	0.46056
29	0.	SLU 2-NL	Max	0.	218.6734	29-1	0.

Table: Element Forces - Frames, Part 2 of 2

Frame	Station	OutputCase	StepType	M2	M3	FrameElem	ElemStation
	m			KN-m	KN-m		m
29	0.23028	SLU 2-NL	Max	0.	236.5899	29-1	0.23028
29	0.46056	SLU 2-NL	Max	0.	247.4554	29-1	0.46056
29	0.	SLU 2-NL	Min	0.	218.6734	29-1	0.
29	0.23028	SLU 2-NL	Min	0.	236.5899	29-1	0.23028
29	0.46056	SLU 2-NL	Min	0.	247.4554	29-1	0.46056
29	0.	SLU 3-NL	Max	0.	40.6303	29-1	0.
29	0.23028	SLU 3-NL	Max	0.	45.1851	29-1	0.23028
29	0.46056	SLU 3-NL	Max	0.	45.4762	29-1	0.46056
29	0.	SLU 3-NL	Min	0.	40.6303	29-1	0.
29	0.23028	SLU 3-NL	Min	0.	45.1851	29-1	0.23028
29	0.46056	SLU 3-NL	Min	0.	45.4762	29-1	0.46056
29	0.	SLU 4-NL	Max	0.	173.5	29-1	0.
29	0.23028	SLU 4-NL	Max	0.	186.2039	29-1	0.23028
29	0.46056	SLU 4-NL	Max	0.	191.8298	29-1	0.46056
29	0.	SLU 4-NL	Min	0.	173.5	29-1	0.
29	0.23028	SLU 4-NL	Min	0.	186.2039	29-1	0.23028
29	0.46056	SLU 4-NL	Min	0.	191.8298	29-1	0.46056
29	0.	SLU 5-NL	Max	0.	48.0746	29-1	0.
29	0.23028	SLU 5-NL	Max	0.	50.856	29-1	0.23028
29	0.46056	SLU 5-NL	Max	0.	49.3736	29-1	0.46056
29	0.	SLU 5-NL	Min	0.	48.0746	29-1	0.
29	0.23028	SLU 5-NL	Min	0.	50.856	29-1	0.23028
29	0.46056	SLU 5-NL	Min	0.	49.3736	29-1	0.46056
29	0.	SLU 6-NL	Max	0.	157.4928	29-1	0.
29	0.23028	SLU 6-NL	Max	0.	174.1417	29-1	0.23028
29	0.46056	SLU 6-NL	Max	0.	183.7394	29-1	0.46056
29	0.	SLU 6-NL	Min	0.	157.4928	29-1	0.
29	0.23028	SLU 6-NL	Min	0.	174.1417	29-1	0.23028
29	0.46056	SLU 6-NL	Min	0.	183.7394	29-1	0.46056
29	0.	SLU 7-NL	Max	0.	31.5668	29-1	0.
29	0.23028	SLU 7-NL	Max	0.	38.4178	29-1	0.23028
29	0.46056	SLU 7-NL	Max	0.	41.032	29-1	0.46056
29	0.	SLU 7-NL	Min	0.	31.5668	29-1	0.
29	0.23028	SLU 7-NL	Min	0.	38.4178	29-1	0.23028
29	0.46056	SLU 7-NL	Min	0.	41.032	29-1	0.46056
29	0.	SLE-C-NL	Max	0.	120.9257	29-1	0.
29	0.23028	SLE-C-NL	Max	0.	131.4841	29-1	0.23028
29	0.46056	SLE-C-NL	Max	0.	136.7592	29-1	0.46056
29	0.	SLE-C-NL	Min	0.	120.9257	29-1	0.
29	0.23028	SLE-C-NL	Min	0.	131.4841	29-1	0.23028
29	0.46056	SLE-C-NL	Min	0.	136.7592	29-1	0.46056
29	0.	SLE-F-1-NL	Max	0.	129.1442	29-1	0.
29	0.23028	SLE-F-1-NL	Max	0.	140.1773	29-1	0.23028
29	0.46056	SLE-F-1-NL	Max	0.	146.1452	29-1	0.46056
29	0.	SLE-F-1-NL	Min	0.	129.1442	29-1	0.
29	0.23028	SLE-F-1-NL	Min	0.	140.1773	29-1	0.23028
29	0.46056	SLE-F-1-NL	Min	0.	146.1452	29-1	0.46056
29	0.	SLE-F-2-NL	Max	0.	89.5501	29-1	0.
29	0.23028	SLE-F-2-NL	Max	0.	96.4714	29-1	0.23028
29	0.46056	SLE-F-2-NL	Max	0.	99.1467	29-1	0.46056
29	0.	SLE-F-2-NL	Min	0.	89.5501	29-1	0.
29	0.23028	SLE-F-2-NL	Min	0.	96.4714	29-1	0.23028
29	0.46056	SLE-F-2-NL	Min	0.	99.1467	29-1	0.46056
29	0.	SLE-F-3-NL	Max	0.	84.1074	29-1	0.

Table: Element Forces - Frames, Part 2 of 2

Frame	Station	OutputCase	StepType	M2	M3	FrameElem	ElemStation
	m			KN-m	KN-m		m
29	0.23028	SLE-F-3-NL	Max	0.	92.3703	29-1	0.23028
29	0.46056	SLE-F-3-NL	Max	0.	96.3961	29-1	0.46056
29	0.	SLE-F-3-NL	Min	0.	84.1074	29-1	0.
29	0.23028	SLE-F-3-NL	Min	0.	92.3703	29-1	0.23028
29	0.46056	SLE-F-3-NL	Min	0.	96.3961	29-1	0.46056
29	0.	SLE-QP-NL	Max	0.	97.4179	29-1	0.
29	0.23028	SLE-QP-NL	Max	0.	105.7127	29-1	0.23028
29	0.46056	SLE-QP-NL	Max	0.	109.7702	29-1	0.46056
29	0.	SLE-QP-NL	Min	0.	97.4179	29-1	0.
29	0.23028	SLE-QP-NL	Min	0.	105.7127	29-1	0.23028
29	0.46056	SLE-QP-NL	Min	0.	109.7702	29-1	0.46056
29	0.	SLV1-NL	Max	0.	66.332	29-1	0.
29	0.23028	SLV1-NL	Max	0.	69.4035	29-1	0.23028
29	0.46056	SLV1-NL	Max	0.	68.023	29-1	0.46056
29	0.	SLV1-NL	Min	0.	66.332	29-1	0.
29	0.23028	SLV1-NL	Min	0.	69.4035	29-1	0.23028
29	0.46056	SLV1-NL	Min	0.	68.023	29-1	0.46056
29	0.	SLV2-NL	Max	0.	81.619	29-1	0.
29	0.23028	SLV2-NL	Max	0.	92.8066	29-1	0.23028
29	0.46056	SLV2-NL	Max	0.	99.6224	29-1	0.46056
29	0.	SLV2-NL	Min	0.	81.619	29-1	0.
29	0.23028	SLV2-NL	Min	0.	92.8066	29-1	0.23028
29	0.46056	SLV2-NL	Min	0.	99.6224	29-1	0.46056
29	0.	SLV3-NL	Max	0.	68.0552	29-1	0.
29	0.23028	SLV3-NL	Max	0.	71.325	29-1	0.23028
29	0.46056	SLV3-NL	Max	0.	70.074	29-1	0.46056
29	0.	SLV3-NL	Min	0.	68.0552	29-1	0.
29	0.23028	SLV3-NL	Min	0.	71.325	29-1	0.23028
29	0.46056	SLV3-NL	Min	0.	70.074	29-1	0.46056
29	0.	SLV4-NL	Max	0.	83.3459	29-1	0.
29	0.23028	SLV4-NL	Max	0.	94.7308	29-1	0.23028
29	0.46056	SLV4-NL	Max	0.	101.6751	29-1	0.46056
29	0.	SLV4-NL	Min	0.	83.3459	29-1	0.
29	0.23028	SLV4-NL	Min	0.	94.7308	29-1	0.23028
29	0.46056	SLV4-NL	Min	0.	101.6751	29-1	0.46056
29	0.	SLV5-NL	Max	0.	91.0548	29-1	0.
29	0.23028	SLV5-NL	Max	0.	97.9514	29-1	0.23028
29	0.46056	SLV5-NL	Max	0.	100.5041	29-1	0.46056
29	0.	SLV5-NL	Min	0.	91.0548	29-1	0.
29	0.23028	SLV5-NL	Min	0.	97.9514	29-1	0.23028
29	0.46056	SLV5-NL	Min	0.	100.5041	29-1	0.46056
29	0.	SLV6-NL	Max	0.	95.8291	29-1	0.
29	0.23028	SLV6-NL	Max	0.	105.1133	29-1	0.23028
29	0.46056	SLV6-NL	Max	0.	110.0776	29-1	0.46056
29	0.	SLV6-NL	Min	0.	95.8291	29-1	0.
29	0.23028	SLV6-NL	Min	0.	105.1133	29-1	0.23028
29	0.46056	SLV6-NL	Min	0.	110.0776	29-1	0.46056
29	0.	SLV7-NL	Max	0.	96.7951	29-1	0.
29	0.23028	SLV7-NL	Max	0.	104.3531	29-1	0.23028
29	0.46056	SLV7-NL	Max	0.	107.3381	29-1	0.46056
29	0.	SLV7-NL	Min	0.	96.7951	29-1	0.
29	0.23028	SLV7-NL	Min	0.	104.3531	29-1	0.23028
29	0.46056	SLV7-NL	Min	0.	107.3381	29-1	0.46056
29	0.	SLV8-NL	Max	0.	101.5876	29-1	0.

Table: Element Forces - Frames, Part 2 of 2

Frame	Station	OutputCase	StepType	M2	M3	FrameElem	ElemStation
	m			KN-m	KN-m		m
29	0.23028	SLV8-NL	Max	0.	111.5286	29-1	0.23028
29	0.46056	SLV8-NL	Max	0.	116.9207	29-1	0.46056
29	0.	SLV8-NL	Min	0.	101.5876	29-1	0.
29	0.23028	SLV8-NL	Min	0.	111.5286	29-1	0.23028
29	0.46056	SLV8-NL	Min	0.	116.9207	29-1	0.46056
29	0.	SLV9-NL	Max	0.	75.8779	29-1	0.
29	0.23028	SLV9-NL	Max	0.	81.7916	29-1	0.23028
29	0.46056	SLV9-NL	Max	0.	83.3136	29-1	0.46056
29	0.	SLV9-NL	Min	0.	75.8779	29-1	0.
29	0.23028	SLV9-NL	Min	0.	81.7916	29-1	0.23028
29	0.46056	SLV9-NL	Min	0.	83.3136	29-1	0.46056
29	0.	SLV10-NL	Max	0.	106.9441	29-1	0.
29	0.23028	SLV10-NL	Max	0.	117.1641	29-1	0.23028
29	0.46056	SLV10-NL	Max	0.	123.0105	29-1	0.46056
29	0.	SLV10-NL	Min	0.	106.9441	29-1	0.
29	0.23028	SLV10-NL	Min	0.	117.1641	29-1	0.23028
29	0.46056	SLV10-NL	Min	0.	123.0105	29-1	0.46056
29	0.	SLV11-NL	Max	0.	81.9206	29-1	0.
29	0.23028	SLV11-NL	Max	0.	88.302	29-1	0.23028
29	0.46056	SLV11-NL	Max	0.	90.1642	29-1	0.46056
29	0.	SLV11-NL	Min	0.	81.9206	29-1	0.
29	0.23028	SLV11-NL	Min	0.	88.302	29-1	0.23028
29	0.46056	SLV11-NL	Min	0.	90.1642	29-1	0.46056
29	0.	SLV12-NL	Max	0.	113.0066	29-1	0.
29	0.23028	SLV12-NL	Max	0.	123.6893	29-1	0.23028
29	0.46056	SLV12-NL	Max	0.	129.8709	29-1	0.46056
29	0.	SLV12-NL	Min	0.	113.0066	29-1	0.
29	0.23028	SLV12-NL	Min	0.	123.6893	29-1	0.23028
29	0.46056	SLV12-NL	Min	0.	129.8709	29-1	0.46056
29	0.	SLV13-NL	Max	0.	87.3616	29-1	0.
29	0.23028	SLV13-NL	Max	0.	94.7024	29-1	0.23028
29	0.46056	SLV13-NL	Max	0.	97.8067	29-1	0.46056
29	0.	SLV13-NL	Min	0.	87.3616	29-1	0.
29	0.23028	SLV13-NL	Min	0.	94.7024	29-1	0.23028
29	0.46056	SLV13-NL	Min	0.	97.8067	29-1	0.46056
29	0.	SLV14-NL	Max	0.	96.6589	29-1	0.
29	0.23028	SLV14-NL	Max	0.	105.2337	29-1	0.23028
29	0.46056	SLV14-NL	Max	0.	109.5772	29-1	0.46056
29	0.	SLV14-NL	Min	0.	96.6589	29-1	0.
29	0.23028	SLV14-NL	Min	0.	105.2337	29-1	0.23028
29	0.46056	SLV14-NL	Min	0.	109.5772	29-1	0.46056
29	0.	SLV15-NL	Max	0.	107.0369	29-1	0.
29	0.23028	SLV15-NL	Max	0.	115.9258	29-1	0.23028
29	0.46056	SLV15-NL	Max	0.	120.153	29-1	0.46056
29	0.	SLV15-NL	Min	0.	107.0369	29-1	0.
29	0.23028	SLV15-NL	Min	0.	115.9258	29-1	0.23028
29	0.46056	SLV15-NL	Min	0.	120.153	29-1	0.46056
29	0.	SLV16-NL	Max	0.	116.3297	29-1	0.
29	0.23028	SLV16-NL	Max	0.	126.4122	29-1	0.23028
29	0.46056	SLV16-NL	Max	0.	131.8384	29-1	0.46056
29	0.	SLV16-NL	Min	0.	116.3297	29-1	0.
29	0.23028	SLV16-NL	Min	0.	126.4122	29-1	0.23028
29	0.46056	SLV16-NL	Min	0.	131.8384	29-1	0.46056
30	0.	SLU 1-NL	Max	0.	183.173	30-1	0.

Table: Element Forces - Frames, Part 2 of 2

Frame	Station	OutputCase	StepType	M2	M3	FrameElem	ElemStation
	m			KN-m	KN-m		m
30	0.23028	SLU 1-NL	Max	0.	190.3117	30-1	0.23028
30	0.46056	SLU 1-NL	Max	0.	190.3538	30-1	0.46056
30	0.	SLU 1-NL	Min	0.	183.173	30-1	0.
30	0.23028	SLU 1-NL	Min	0.	190.3117	30-1	0.23028
30	0.46056	SLU 1-NL	Min	0.	190.3538	30-1	0.46056
30	0.	SLU 2-NL	Max	0.	247.4554	30-1	0.
30	0.23028	SLU 2-NL	Max	0.	255.8593	30-1	0.23028
30	0.46056	SLU 2-NL	Max	0.	257.1699	30-1	0.46056
30	0.	SLU 2-NL	Min	0.	247.4554	30-1	0.
30	0.23028	SLU 2-NL	Min	0.	255.8593	30-1	0.23028
30	0.46056	SLU 2-NL	Min	0.	257.1699	30-1	0.46056
30	0.	SLU 3-NL	Max	0.	45.4762	30-1	0.
30	0.23028	SLU 3-NL	Max	0.	48.4105	30-1	0.23028
30	0.46056	SLU 3-NL	Max	0.	47.1058	30-1	0.46056
30	0.	SLU 3-NL	Min	0.	45.4762	30-1	0.
30	0.23028	SLU 3-NL	Min	0.	48.4105	30-1	0.23028
30	0.46056	SLU 3-NL	Min	0.	47.1058	30-1	0.46056
30	0.	SLU 4-NL	Max	0.	191.8298	30-1	0.
30	0.23028	SLU 4-NL	Max	0.	197.1206	30-1	0.23028
30	0.46056	SLU 4-NL	Max	0.	195.3148	30-1	0.46056
30	0.	SLU 4-NL	Min	0.	191.8298	30-1	0.
30	0.23028	SLU 4-NL	Min	0.	197.1206	30-1	0.23028
30	0.46056	SLU 4-NL	Min	0.	195.3148	30-1	0.46056
30	0.	SLU 5-NL	Max	0.	49.3736	30-1	0.
30	0.23028	SLU 5-NL	Max	0.	50.3181	30-1	0.23028
30	0.46056	SLU 5-NL	Max	0.	47.0237	30-1	0.46056
30	0.	SLU 5-NL	Min	0.	49.3736	30-1	0.
30	0.23028	SLU 5-NL	Min	0.	50.3181	30-1	0.23028
30	0.46056	SLU 5-NL	Min	0.	47.0237	30-1	0.46056
30	0.	SLU 6-NL	Max	0.	183.7394	30-1	0.
30	0.23028	SLU 6-NL	Max	0.	193.0739	30-1	0.23028
30	0.46056	SLU 6-NL	Max	0.	195.3148	30-1	0.46056
30	0.	SLU 6-NL	Min	0.	183.7394	30-1	0.
30	0.23028	SLU 6-NL	Min	0.	193.0739	30-1	0.23028
30	0.46056	SLU 6-NL	Min	0.	195.3148	30-1	0.46056
30	0.	SLU 7-NL	Max	0.	41.032	30-1	0.
30	0.23028	SLU 7-NL	Max	0.	46.1458	30-1	0.23028
30	0.46056	SLU 7-NL	Max	0.	47.0237	30-1	0.46056
30	0.	SLU 7-NL	Min	0.	41.032	30-1	0.
30	0.23028	SLU 7-NL	Min	0.	46.1458	30-1	0.23028
30	0.46056	SLU 7-NL	Min	0.	47.0237	30-1	0.46056
30	0.	SLE-C-NL	Max	0.	136.7592	30-1	0.
30	0.23028	SLE-C-NL	Max	0.	142.0783	30-1	0.23028
30	0.46056	SLE-C-NL	Max	0.	142.1018	30-1	0.46056
30	0.	SLE-C-NL	Min	0.	136.7592	30-1	0.
30	0.23028	SLE-C-NL	Min	0.	142.0783	30-1	0.23028
30	0.46056	SLE-C-NL	Min	0.	142.1018	30-1	0.46056
30	0.	SLE-F-1-NL	Max	0.	146.1452	30-1	0.
30	0.23028	SLE-F-1-NL	Max	0.	151.5557	30-1	0.23028
30	0.46056	SLE-F-1-NL	Max	0.	151.8836	30-1	0.46056
30	0.	SLE-F-1-NL	Min	0.	146.1452	30-1	0.
30	0.23028	SLE-F-1-NL	Min	0.	151.5557	30-1	0.23028
30	0.46056	SLE-F-1-NL	Min	0.	151.8836	30-1	0.46056
30	0.	SLE-F-2-NL	Max	0.	99.1467	30-1	0.

Table: Element Forces - Frames, Part 2 of 2

Frame	Station	OutputCase	StepType	M2	M3	FrameElem	ElemStation
	m			KN-m	KN-m		m
30	0.23028	SLE-F-2-NL	Max	0.	102.4222	30-1	0.23028
30	0.46056	SLE-F-2-NL	Max	0.	101.4605	30-1	0.46056
30	0.	SLE-F-2-NL	Min	0.	99.1467	30-1	0.
30	0.23028	SLE-F-2-NL	Min	0.	102.4222	30-1	0.23028
30	0.46056	SLE-F-2-NL	Min	0.	101.4605	30-1	0.46056
30	0.	SLE-F-3-NL	Max	0.	96.3961	30-1	0.
30	0.23028	SLE-F-3-NL	Max	0.	101.0464	30-1	0.23028
30	0.46056	SLE-F-3-NL	Max	0.	101.4605	30-1	0.46056
30	0.	SLE-F-3-NL	Min	0.	96.3961	30-1	0.
30	0.23028	SLE-F-3-NL	Min	0.	101.0464	30-1	0.23028
30	0.46056	SLE-F-3-NL	Min	0.	101.4605	30-1	0.46056
30	0.	SLE-QP-NL	Max	0.	109.7702	30-1	0.
30	0.23028	SLE-QP-NL	Max	0.	113.9707	30-1	0.23028
30	0.46056	SLE-QP-NL	Max	0.	113.9349	30-1	0.46056
30	0.	SLE-QP-NL	Min	0.	109.7702	30-1	0.
30	0.23028	SLE-QP-NL	Min	0.	113.9707	30-1	0.23028
30	0.46056	SLE-QP-NL	Min	0.	113.9349	30-1	0.46056
30	0.	SLV1-NL	Max	0.	68.023	30-1	0.
30	0.23028	SLV1-NL	Max	0.	68.6068	30-1	0.23028
30	0.46056	SLV1-NL	Max	0.	64.7699	30-1	0.46056
30	0.	SLV1-NL	Min	0.	68.023	30-1	0.
30	0.23028	SLV1-NL	Min	0.	68.6068	30-1	0.23028
30	0.46056	SLV1-NL	Min	0.	64.7699	30-1	0.46056
30	0.	SLV2-NL	Max	0.	99.6224	30-1	0.
30	0.23028	SLV2-NL	Max	0.	106.7686	30-1	0.23028
30	0.46056	SLV2-NL	Max	0.	109.51	30-1	0.46056
30	0.	SLV2-NL	Min	0.	99.6224	30-1	0.
30	0.23028	SLV2-NL	Min	0.	106.7686	30-1	0.23028
30	0.46056	SLV2-NL	Min	0.	109.51	30-1	0.46056
30	0.	SLV3-NL	Max	0.	70.074	30-1	0.
30	0.23028	SLV3-NL	Max	0.	70.749	30-1	0.23028
30	0.46056	SLV3-NL	Max	0.	66.9329	30-1	0.46056
30	0.	SLV3-NL	Min	0.	70.074	30-1	0.
30	0.23028	SLV3-NL	Min	0.	70.749	30-1	0.23028
30	0.46056	SLV3-NL	Min	0.	66.9329	30-1	0.46056
30	0.	SLV4-NL	Max	0.	101.6751	30-1	0.
30	0.23028	SLV4-NL	Max	0.	108.9117	30-1	0.23028
30	0.46056	SLV4-NL	Max	0.	111.6729	30-1	0.46056
30	0.	SLV4-NL	Min	0.	101.6751	30-1	0.
30	0.23028	SLV4-NL	Min	0.	108.9117	30-1	0.23028
30	0.46056	SLV4-NL	Min	0.	111.6729	30-1	0.46056
30	0.	SLV5-NL	Max	0.	100.5041	30-1	0.
30	0.23028	SLV5-NL	Max	0.	103.7051	30-1	0.23028
30	0.46056	SLV5-NL	Max	0.	102.5732	30-1	0.46056
30	0.	SLV5-NL	Min	0.	100.5041	30-1	0.
30	0.23028	SLV5-NL	Min	0.	103.7051	30-1	0.23028
30	0.46056	SLV5-NL	Min	0.	102.5732	30-1	0.46056
30	0.	SLV6-NL	Max	0.	110.0776	30-1	0.
30	0.23028	SLV6-NL	Max	0.	115.1996	30-1	0.23028
30	0.46056	SLV6-NL	Max	0.	115.9935	30-1	0.46056
30	0.	SLV6-NL	Min	0.	110.0776	30-1	0.
30	0.23028	SLV6-NL	Min	0.	115.1996	30-1	0.23028
30	0.46056	SLV6-NL	Min	0.	115.9935	30-1	0.46056
30	0.	SLV7-NL	Max	0.	107.3381	30-1	0.

Table: Element Forces - Frames, Part 2 of 2

Frame	Station	OutputCase	StepType	M2	M3	FrameElem	ElemStation
	m			KN-m	KN-m		m
30	0.23028	SLV7-NL	Max	0.	110.8441	30-1	0.23028
30	0.46056	SLV7-NL	Max	0.	109.782	30-1	0.46056
30	0.	SLV7-NL	Min	0.	107.3381	30-1	0.
30	0.23028	SLV7-NL	Min	0.	110.8441	30-1	0.23028
30	0.46056	SLV7-NL	Min	0.	109.782	30-1	0.46056
30	0.	SLV8-NL	Max	0.	116.9207	30-1	0.
30	0.23028	SLV8-NL	Max	0.	122.3431	30-1	0.23028
30	0.46056	SLV8-NL	Max	0.	123.2022	30-1	0.46056
30	0.	SLV8-NL	Min	0.	116.9207	30-1	0.
30	0.23028	SLV8-NL	Min	0.	122.3431	30-1	0.23028
30	0.46056	SLV8-NL	Min	0.	123.2022	30-1	0.46056
30	0.	SLV9-NL	Max	0.	83.3136	30-1	0.
30	0.23028	SLV9-NL	Max	0.	86.221	30-1	0.23028
30	0.46056	SLV9-NL	Max	0.	84.7478	30-1	0.46056
30	0.	SLV9-NL	Min	0.	83.3136	30-1	0.
30	0.23028	SLV9-NL	Min	0.	86.221	30-1	0.23028
30	0.46056	SLV9-NL	Min	0.	84.7478	30-1	0.46056
30	0.	SLV10-NL	Max	0.	123.0105	30-1	0.
30	0.23028	SLV10-NL	Max	0.	128.4398	30-1	0.23028
30	0.46056	SLV10-NL	Max	0.	129.4836	30-1	0.46056
30	0.	SLV10-NL	Min	0.	123.0105	30-1	0.
30	0.23028	SLV10-NL	Min	0.	128.4398	30-1	0.23028
30	0.46056	SLV10-NL	Min	0.	129.4836	30-1	0.46056
30	0.	SLV11-NL	Max	0.	90.1642	30-1	0.
30	0.23028	SLV11-NL	Max	0.	93.2748	30-1	0.23028
30	0.46056	SLV11-NL	Max	0.	91.8747	30-1	0.46056
30	0.	SLV11-NL	Min	0.	90.1642	30-1	0.
30	0.23028	SLV11-NL	Min	0.	93.2748	30-1	0.23028
30	0.46056	SLV11-NL	Min	0.	91.8747	30-1	0.46056
30	0.	SLV12-NL	Max	0.	129.8709	30-1	0.
30	0.23028	SLV12-NL	Max	0.	135.4983	30-1	0.23028
30	0.46056	SLV12-NL	Max	0.	136.6102	30-1	0.46056
30	0.	SLV12-NL	Min	0.	129.8709	30-1	0.
30	0.23028	SLV12-NL	Min	0.	135.4983	30-1	0.23028
30	0.46056	SLV12-NL	Min	0.	136.6102	30-1	0.46056
30	0.	SLV13-NL	Max	0.	97.8067	30-1	0.
30	0.23028	SLV13-NL	Max	0.	101.5357	30-1	0.23028
30	0.46056	SLV13-NL	Max	0.	101.034	30-1	0.46056
30	0.	SLV13-NL	Min	0.	97.8067	30-1	0.
30	0.23028	SLV13-NL	Min	0.	101.5357	30-1	0.23028
30	0.46056	SLV13-NL	Min	0.	101.034	30-1	0.46056
30	0.	SLV14-NL	Max	0.	109.5772	30-1	0.
30	0.23028	SLV14-NL	Max	0.	114.011	30-1	0.23028
30	0.46056	SLV14-NL	Max	0.	114.2126	30-1	0.46056
30	0.	SLV14-NL	Min	0.	109.5772	30-1	0.
30	0.23028	SLV14-NL	Min	0.	114.011	30-1	0.23028
30	0.46056	SLV14-NL	Min	0.	114.2126	30-1	0.46056
30	0.	SLV15-NL	Max	0.	120.153	30-1	0.
30	0.23028	SLV15-NL	Max	0.	124.5618	30-1	0.23028
30	0.46056	SLV15-NL	Max	0.	124.3065	30-1	0.46056
30	0.	SLV15-NL	Min	0.	120.153	30-1	0.
30	0.23028	SLV15-NL	Min	0.	124.5618	30-1	0.23028
30	0.46056	SLV15-NL	Min	0.	124.3065	30-1	0.46056
30	0.	SLV16-NL	Max	0.	131.8384	30-1	0.

Table: Element Forces - Frames, Part 2 of 2

Frame	Station	OutputCase	StepType	M2	M3	FrameElem	ElemStation
	m			KN-m	KN-m		m
30	0.23028	SLV16-NL	Max	0.	136.9163	30-1	0.23028
30	0.46056	SLV16-NL	Max	0.	137.3286	30-1	0.46056
30	0.	SLV16-NL	Min	0.	131.8384	30-1	0.
30	0.23028	SLV16-NL	Min	0.	136.9163	30-1	0.23028
30	0.46056	SLV16-NL	Min	0.	137.3286	30-1	0.46056
31	0.	SLU 1-NL	Max	0.	190.3538	31-1	0.
31	0.23028	SLU 1-NL	Max	0.	190.3117	31-1	0.23028
31	0.46056	SLU 1-NL	Max	0.	183.173	31-1	0.46056
31	0.	SLU 1-NL	Min	0.	190.3538	31-1	0.
31	0.23028	SLU 1-NL	Min	0.	190.3117	31-1	0.23028
31	0.46056	SLU 1-NL	Min	0.	183.173	31-1	0.46056
31	0.	SLU 2-NL	Max	0.	257.1699	31-1	0.
31	0.23028	SLU 2-NL	Max	0.	255.8593	31-1	0.23028
31	0.46056	SLU 2-NL	Max	0.	247.4554	31-1	0.46056
31	0.	SLU 2-NL	Min	0.	257.1699	31-1	0.
31	0.23028	SLU 2-NL	Min	0.	255.8593	31-1	0.23028
31	0.46056	SLU 2-NL	Min	0.	247.4554	31-1	0.46056
31	0.	SLU 3-NL	Max	0.	47.1058	31-1	0.
31	0.23028	SLU 3-NL	Max	0.	48.4105	31-1	0.23028
31	0.46056	SLU 3-NL	Max	0.	45.4762	31-1	0.46056
31	0.	SLU 3-NL	Min	0.	47.1058	31-1	0.
31	0.23028	SLU 3-NL	Min	0.	48.4105	31-1	0.23028
31	0.46056	SLU 3-NL	Min	0.	45.4762	31-1	0.46056
31	0.	SLU 4-NL	Max	0.	195.3148	31-1	0.
31	0.23028	SLU 4-NL	Max	0.	193.0739	31-1	0.23028
31	0.46056	SLU 4-NL	Max	0.	183.7394	31-1	0.46056
31	0.	SLU 4-NL	Min	0.	195.3148	31-1	0.
31	0.23028	SLU 4-NL	Min	0.	193.0739	31-1	0.23028
31	0.46056	SLU 4-NL	Min	0.	183.7394	31-1	0.46056
31	0.	SLU 5-NL	Max	0.	47.0237	31-1	0.
31	0.23028	SLU 5-NL	Max	0.	46.1458	31-1	0.23028
31	0.46056	SLU 5-NL	Max	0.	41.032	31-1	0.46056
31	0.	SLU 5-NL	Min	0.	47.0237	31-1	0.
31	0.23028	SLU 5-NL	Min	0.	46.1458	31-1	0.23028
31	0.46056	SLU 5-NL	Min	0.	41.032	31-1	0.46056
31	0.	SLU 6-NL	Max	0.	195.3148	31-1	0.
31	0.23028	SLU 6-NL	Max	0.	197.1206	31-1	0.23028
31	0.46056	SLU 6-NL	Max	0.	191.8298	31-1	0.46056
31	0.	SLU 6-NL	Min	0.	195.3148	31-1	0.
31	0.23028	SLU 6-NL	Min	0.	197.1206	31-1	0.23028
31	0.46056	SLU 6-NL	Min	0.	191.8298	31-1	0.46056
31	0.	SLU 7-NL	Max	0.	47.0237	31-1	0.
31	0.23028	SLU 7-NL	Max	0.	50.3181	31-1	0.23028
31	0.46056	SLU 7-NL	Max	0.	49.3736	31-1	0.46056
31	0.	SLU 7-NL	Min	0.	47.0237	31-1	0.
31	0.23028	SLU 7-NL	Min	0.	50.3181	31-1	0.23028
31	0.46056	SLU 7-NL	Min	0.	49.3736	31-1	0.46056
31	0.	SLE-C-NL	Max	0.	142.1018	31-1	0.
31	0.23028	SLE-C-NL	Max	0.	142.0783	31-1	0.23028
31	0.46056	SLE-C-NL	Max	0.	136.7592	31-1	0.46056
31	0.	SLE-C-NL	Min	0.	142.1018	31-1	0.
31	0.23028	SLE-C-NL	Min	0.	142.0783	31-1	0.23028
31	0.46056	SLE-C-NL	Min	0.	136.7592	31-1	0.46056
31	0.	SLE-F-1-NL	Max	0.	151.8836	31-1	0.

Table: Element Forces - Frames, Part 2 of 2

Frame	Station	OutputCase	StepType	M2	M3	FrameElem	ElemStation
	m			KN-m	KN-m		m
31	0.23028	SLE-F-1-NL	Max	0.	151.5557	31-1	0.23028
31	0.46056	SLE-F-1-NL	Max	0.	146.1452	31-1	0.46056
31	0.	SLE-F-1-NL	Min	0.	151.8836	31-1	0.
31	0.23028	SLE-F-1-NL	Min	0.	151.5557	31-1	0.23028
31	0.46056	SLE-F-1-NL	Min	0.	146.1452	31-1	0.46056
31	0.	SLE-F-2-NL	Max	0.	101.4605	31-1	0.
31	0.23028	SLE-F-2-NL	Max	0.	101.0464	31-1	0.23028
31	0.46056	SLE-F-2-NL	Max	0.	96.3961	31-1	0.46056
31	0.	SLE-F-2-NL	Min	0.	101.4605	31-1	0.
31	0.23028	SLE-F-2-NL	Min	0.	101.0464	31-1	0.23028
31	0.46056	SLE-F-2-NL	Min	0.	96.3961	31-1	0.46056
31	0.	SLE-F-3-NL	Max	0.	101.4605	31-1	0.
31	0.23028	SLE-F-3-NL	Max	0.	102.4222	31-1	0.23028
31	0.46056	SLE-F-3-NL	Max	0.	99.1467	31-1	0.46056
31	0.	SLE-F-3-NL	Min	0.	101.4605	31-1	0.
31	0.23028	SLE-F-3-NL	Min	0.	102.4222	31-1	0.23028
31	0.46056	SLE-F-3-NL	Min	0.	99.1467	31-1	0.46056
31	0.	SLE-QP-NL	Max	0.	113.9349	31-1	0.
31	0.23028	SLE-QP-NL	Max	0.	113.9707	31-1	0.23028
31	0.46056	SLE-QP-NL	Max	0.	109.7702	31-1	0.46056
31	0.	SLE-QP-NL	Min	0.	113.9349	31-1	0.
31	0.23028	SLE-QP-NL	Min	0.	113.9707	31-1	0.23028
31	0.46056	SLE-QP-NL	Min	0.	109.7702	31-1	0.46056
31	0.	SLV1-NL	Max	0.	64.7699	31-1	0.
31	0.23028	SLV1-NL	Max	0.	62.9195	31-1	0.23028
31	0.46056	SLV1-NL	Max	0.	56.6617	31-1	0.46056
31	0.	SLV1-NL	Min	0.	64.7699	31-1	0.
31	0.23028	SLV1-NL	Min	0.	62.9195	31-1	0.23028
31	0.46056	SLV1-NL	Min	0.	56.6617	31-1	0.46056
31	0.	SLV2-NL	Max	0.	109.51	31-1	0.
31	0.23028	SLV2-NL	Max	0.	112.4227	31-1	0.23028
31	0.46056	SLV2-NL	Max	0.	110.9174	31-1	0.46056
31	0.	SLV2-NL	Min	0.	109.51	31-1	0.
31	0.23028	SLV2-NL	Min	0.	112.4227	31-1	0.23028
31	0.46056	SLV2-NL	Min	0.	110.9174	31-1	0.46056
31	0.	SLV3-NL	Max	0.	66.9329	31-1	0.
31	0.23028	SLV3-NL	Max	0.	65.0627	31-1	0.23028
31	0.46056	SLV3-NL	Max	0.	58.7145	31-1	0.46056
31	0.	SLV3-NL	Min	0.	66.9329	31-1	0.
31	0.23028	SLV3-NL	Min	0.	65.0627	31-1	0.23028
31	0.46056	SLV3-NL	Min	0.	58.7145	31-1	0.46056
31	0.	SLV4-NL	Max	0.	111.6729	31-1	0.
31	0.23028	SLV4-NL	Max	0.	114.5649	31-1	0.23028
31	0.46056	SLV4-NL	Max	0.	112.9683	31-1	0.46056
31	0.	SLV4-NL	Min	0.	111.6729	31-1	0.
31	0.23028	SLV4-NL	Min	0.	114.5649	31-1	0.23028
31	0.46056	SLV4-NL	Min	0.	112.9683	31-1	0.46056
31	0.	SLV5-NL	Max	0.	102.5732	31-1	0.
31	0.23028	SLV5-NL	Max	0.	102.0464	31-1	0.23028
31	0.46056	SLV5-NL	Max	0.	97.1906	31-1	0.46056
31	0.	SLV5-NL	Min	0.	102.5732	31-1	0.
31	0.23028	SLV5-NL	Min	0.	102.0464	31-1	0.23028
31	0.46056	SLV5-NL	Min	0.	97.1906	31-1	0.46056
31	0.	SLV6-NL	Max	0.	115.9935	31-1	0.

Table: Element Forces - Frames, Part 2 of 2

Frame	Station	OutputCase	StepType	M2	M3	FrameElem	ElemStation
	m			KN-m	KN-m		m
31	0.23028	SLV6-NL	Max	0.	116.848	31-1	0.23028
31	0.46056	SLV6-NL	Max	0.	113.3704	31-1	0.46056
31	0.	SLV6-NL	Min	0.	115.9935	31-1	0.
31	0.23028	SLV6-NL	Min	0.	116.848	31-1	0.23028
31	0.46056	SLV6-NL	Min	0.	113.3704	31-1	0.46056
31	0.	SLV7-NL	Max	0.	109.782	31-1	0.
31	0.23028	SLV7-NL	Max	0.	109.1899	31-1	0.23028
31	0.46056	SLV7-NL	Max	0.	104.0338	31-1	0.46056
31	0.	SLV7-NL	Min	0.	109.782	31-1	0.
31	0.23028	SLV7-NL	Min	0.	109.1899	31-1	0.23028
31	0.46056	SLV7-NL	Min	0.	104.0338	31-1	0.46056
31	0.	SLV8-NL	Max	0.	123.2022	31-1	0.
31	0.23028	SLV8-NL	Max	0.	123.9869	31-1	0.23028
31	0.46056	SLV8-NL	Max	0.	120.2043	31-1	0.46056
31	0.	SLV8-NL	Min	0.	123.2022	31-1	0.
31	0.23028	SLV8-NL	Min	0.	123.9869	31-1	0.23028
31	0.46056	SLV8-NL	Min	0.	120.2043	31-1	0.46056
31	0.	SLV9-NL	Max	0.	84.7478	31-1	0.
31	0.23028	SLV9-NL	Max	0.	84.5949	31-1	0.23028
31	0.46056	SLV9-NL	Max	0.	80.0537	31-1	0.46056
31	0.	SLV9-NL	Min	0.	84.7478	31-1	0.
31	0.23028	SLV9-NL	Min	0.	84.5949	31-1	0.23028
31	0.46056	SLV9-NL	Min	0.	80.0537	31-1	0.46056
31	0.	SLV10-NL	Max	0.	129.4836	31-1	0.
31	0.23028	SLV10-NL	Max	0.	130.0326	31-1	0.23028
31	0.46056	SLV10-NL	Max	0.	126.2037	31-1	0.46056
31	0.	SLV10-NL	Min	0.	129.4836	31-1	0.
31	0.23028	SLV10-NL	Min	0.	130.0326	31-1	0.23028
31	0.46056	SLV10-NL	Min	0.	126.2037	31-1	0.46056
31	0.	SLV11-NL	Max	0.	91.8747	31-1	0.
31	0.23028	SLV11-NL	Max	0.	91.6537	31-1	0.23028
31	0.46056	SLV11-NL	Max	0.	86.9144	31-1	0.46056
31	0.	SLV11-NL	Min	0.	91.8747	31-1	0.
31	0.23028	SLV11-NL	Min	0.	91.6537	31-1	0.23028
31	0.46056	SLV11-NL	Min	0.	86.9144	31-1	0.46056
31	0.	SLV12-NL	Max	0.	136.6102	31-1	0.
31	0.23028	SLV12-NL	Max	0.	137.0861	31-1	0.23028
31	0.46056	SLV12-NL	Max	0.	133.054	31-1	0.46056
31	0.	SLV12-NL	Min	0.	136.6102	31-1	0.
31	0.23028	SLV12-NL	Min	0.	137.0861	31-1	0.23028
31	0.46056	SLV12-NL	Min	0.	133.054	31-1	0.46056
31	0.	SLV13-NL	Max	0.	101.034	31-1	0.
31	0.23028	SLV13-NL	Max	0.	101.0904	31-1	0.23028
31	0.46056	SLV13-NL	Max	0.	96.9139	31-1	0.46056
31	0.	SLV13-NL	Min	0.	101.034	31-1	0.
31	0.23028	SLV13-NL	Min	0.	101.0904	31-1	0.23028
31	0.46056	SLV13-NL	Min	0.	96.9139	31-1	0.46056
31	0.	SLV14-NL	Max	0.	114.2126	31-1	0.
31	0.23028	SLV14-NL	Max	0.	114.4346	31-1	0.23028
31	0.46056	SLV14-NL	Max	0.	110.4268	31-1	0.46056
31	0.	SLV14-NL	Min	0.	114.2126	31-1	0.
31	0.23028	SLV14-NL	Min	0.	114.4346	31-1	0.23028
31	0.46056	SLV14-NL	Min	0.	110.4268	31-1	0.46056
31	0.	SLV15-NL	Max	0.	124.3065	31-1	0.

Table: Element Forces - Frames, Part 2 of 2

Frame	Station	OutputCase	StepType	M2	M3	FrameElem	ElemStation
	m			KN-m	KN-m		m
31	0.23028	SLV15-NL	Max	0.	124.1523	31-1	0.23028
31	0.46056	SLV15-NL	Max	0.	119.3316	31-1	0.46056
31	0.	SLV15-NL	Min	0.	124.3065	31-1	0.
31	0.23028	SLV15-NL	Min	0.	124.1523	31-1	0.23028
31	0.46056	SLV15-NL	Min	0.	119.3316	31-1	0.46056
31	0.	SLV16-NL	Max	0.	137.3286	31-1	0.
31	0.23028	SLV16-NL	Max	0.	137.3092	31-1	0.23028
31	0.46056	SLV16-NL	Max	0.	132.6265	31-1	0.46056
31	0.	SLV16-NL	Min	0.	137.3286	31-1	0.
31	0.23028	SLV16-NL	Min	0.	137.3092	31-1	0.23028
31	0.46056	SLV16-NL	Min	0.	132.6265	31-1	0.46056
32	0.	SLU 1-NL	Max	0.	183.173	32-1	0.
32	0.23028	SLU 1-NL	Max	0.	176.0722	32-1	0.23028
32	0.46056	SLU 1-NL	Max	0.	161.8935	32-1	0.46056
32	0.	SLU 1-NL	Min	0.	183.173	32-1	0.
32	0.23028	SLU 1-NL	Min	0.	176.0722	32-1	0.23028
32	0.46056	SLU 1-NL	Min	0.	161.8935	32-1	0.46056
32	0.	SLU 2-NL	Max	0.	247.4554	32-1	0.
32	0.23028	SLU 2-NL	Max	0.	236.5899	32-1	0.23028
32	0.46056	SLU 2-NL	Max	0.	218.6734	32-1	0.46056
32	0.	SLU 2-NL	Min	0.	247.4554	32-1	0.
32	0.23028	SLU 2-NL	Min	0.	236.5899	32-1	0.23028
32	0.46056	SLU 2-NL	Min	0.	218.6734	32-1	0.46056
32	0.	SLU 3-NL	Max	0.	45.4762	32-1	0.
32	0.23028	SLU 3-NL	Max	0.	45.1851	32-1	0.23028
32	0.46056	SLU 3-NL	Max	0.	40.6303	32-1	0.46056
32	0.	SLU 3-NL	Min	0.	45.4762	32-1	0.
32	0.23028	SLU 3-NL	Min	0.	45.1851	32-1	0.23028
32	0.46056	SLU 3-NL	Min	0.	40.6303	32-1	0.46056
32	0.	SLU 4-NL	Max	0.	183.7394	32-1	0.
32	0.23028	SLU 4-NL	Max	0.	174.1417	32-1	0.23028
32	0.46056	SLU 4-NL	Max	0.	157.4928	32-1	0.46056
32	0.	SLU 4-NL	Min	0.	183.7394	32-1	0.
32	0.23028	SLU 4-NL	Min	0.	174.1417	32-1	0.23028
32	0.46056	SLU 4-NL	Min	0.	157.4928	32-1	0.46056
32	0.	SLU 5-NL	Max	0.	41.032	32-1	0.
32	0.23028	SLU 5-NL	Max	0.	38.4178	32-1	0.23028
32	0.46056	SLU 5-NL	Max	0.	31.5668	32-1	0.46056
32	0.	SLU 5-NL	Min	0.	41.032	32-1	0.
32	0.23028	SLU 5-NL	Min	0.	38.4178	32-1	0.23028
32	0.46056	SLU 5-NL	Min	0.	31.5668	32-1	0.46056
32	0.	SLU 6-NL	Max	0.	191.8298	32-1	0.
32	0.23028	SLU 6-NL	Max	0.	186.2039	32-1	0.23028
32	0.46056	SLU 6-NL	Max	0.	173.5	32-1	0.46056
32	0.	SLU 6-NL	Min	0.	191.8298	32-1	0.
32	0.23028	SLU 6-NL	Min	0.	186.2039	32-1	0.23028
32	0.46056	SLU 6-NL	Min	0.	173.5	32-1	0.46056
32	0.	SLU 7-NL	Max	0.	49.3736	32-1	0.
32	0.23028	SLU 7-NL	Max	0.	50.856	32-1	0.23028
32	0.46056	SLU 7-NL	Max	0.	48.0746	32-1	0.46056
32	0.	SLU 7-NL	Min	0.	49.3736	32-1	0.
32	0.23028	SLU 7-NL	Min	0.	50.856	32-1	0.23028
32	0.46056	SLU 7-NL	Min	0.	48.0746	32-1	0.46056
32	0.	SLE-C-NL	Max	0.	136.7592	32-1	0.

Table: Element Forces - Frames, Part 2 of 2

Frame	Station	OutputCase	StepType	M2	M3	FrameElem	ElemStation
	m			KN-m	KN-m		m
32	0.23028	SLE-C-NL	Max	0.	131.4841	32-1	0.23028
32	0.46056	SLE-C-NL	Max	0.	120.9257	32-1	0.46056
32	0.	SLE-C-NL	Min	0.	136.7592	32-1	0.
32	0.23028	SLE-C-NL	Min	0.	131.4841	32-1	0.23028
32	0.46056	SLE-C-NL	Min	0.	120.9257	32-1	0.46056
32	0.	SLE-F-1-NL	Max	0.	146.1452	32-1	0.
32	0.23028	SLE-F-1-NL	Max	0.	140.1773	32-1	0.23028
32	0.46056	SLE-F-1-NL	Max	0.	129.1442	32-1	0.46056
32	0.	SLE-F-1-NL	Min	0.	146.1452	32-1	0.
32	0.23028	SLE-F-1-NL	Min	0.	140.1773	32-1	0.23028
32	0.46056	SLE-F-1-NL	Min	0.	129.1442	32-1	0.46056
32	0.	SLE-F-2-NL	Max	0.	96.3961	32-1	0.
32	0.23028	SLE-F-2-NL	Max	0.	92.3703	32-1	0.23028
32	0.46056	SLE-F-2-NL	Max	0.	84.1074	32-1	0.46056
32	0.	SLE-F-2-NL	Min	0.	96.3961	32-1	0.
32	0.23028	SLE-F-2-NL	Min	0.	92.3703	32-1	0.23028
32	0.46056	SLE-F-2-NL	Min	0.	84.1074	32-1	0.46056
32	0.	SLE-F-3-NL	Max	0.	99.1467	32-1	0.
32	0.23028	SLE-F-3-NL	Max	0.	96.4714	32-1	0.23028
32	0.46056	SLE-F-3-NL	Max	0.	89.5501	32-1	0.46056
32	0.	SLE-F-3-NL	Min	0.	99.1467	32-1	0.
32	0.23028	SLE-F-3-NL	Min	0.	96.4714	32-1	0.23028
32	0.46056	SLE-F-3-NL	Min	0.	89.5501	32-1	0.46056
32	0.	SLE-QP-NL	Max	0.	109.7702	32-1	0.
32	0.23028	SLE-QP-NL	Max	0.	105.7127	32-1	0.23028
32	0.46056	SLE-QP-NL	Max	0.	97.4179	32-1	0.46056
32	0.	SLE-QP-NL	Min	0.	109.7702	32-1	0.
32	0.23028	SLE-QP-NL	Min	0.	105.7127	32-1	0.23028
32	0.46056	SLE-QP-NL	Min	0.	97.4179	32-1	0.46056
32	0.	SLV1-NL	Max	0.	56.6617	32-1	0.
32	0.23028	SLV1-NL	Max	0.	52.5179	32-1	0.23028
32	0.46056	SLV1-NL	Max	0.	43.9777	32-1	0.46056
32	0.	SLV1-NL	Min	0.	56.6617	32-1	0.
32	0.23028	SLV1-NL	Min	0.	52.5179	32-1	0.23028
32	0.46056	SLV1-NL	Min	0.	43.9777	32-1	0.46056
32	0.	SLV2-NL	Max	0.	110.9174	32-1	0.
32	0.23028	SLV2-NL	Max	0.	109.5931	32-1	0.23028
32	0.46056	SLV2-NL	Max	0.	103.8413	32-1	0.46056
32	0.	SLV2-NL	Min	0.	110.9174	32-1	0.
32	0.23028	SLV2-NL	Min	0.	109.5931	32-1	0.23028
32	0.46056	SLV2-NL	Min	0.	103.8413	32-1	0.46056
32	0.	SLV3-NL	Max	0.	58.7145	32-1	0.
32	0.23028	SLV3-NL	Max	0.	54.4421	32-1	0.23028
32	0.46056	SLV3-NL	Max	0.	45.7047	32-1	0.46056
32	0.	SLV3-NL	Min	0.	58.7145	32-1	0.
32	0.23028	SLV3-NL	Min	0.	54.4421	32-1	0.23028
32	0.46056	SLV3-NL	Min	0.	45.7047	32-1	0.46056
32	0.	SLV4-NL	Max	0.	112.9683	32-1	0.
32	0.23028	SLV4-NL	Max	0.	111.5145	32-1	0.23028
32	0.46056	SLV4-NL	Max	0.	105.5645	32-1	0.46056
32	0.	SLV4-NL	Min	0.	112.9683	32-1	0.
32	0.23028	SLV4-NL	Min	0.	111.5145	32-1	0.23028
32	0.46056	SLV4-NL	Min	0.	105.5645	32-1	0.46056
32	0.	SLV5-NL	Max	0.	97.1906	32-1	0.

Table: Element Forces - Frames, Part 2 of 2

Frame	Station	OutputCase	StepType	M2	M3	FrameElem	ElemStation
	m			KN-m	KN-m		m
32	0.23028	SLV5-NL	Max	0.	93.0276	32-1	0.23028
32	0.46056	SLV5-NL	Max	0.	84.5373	32-1	0.46056
32	0.	SLV5-NL	Min	0.	97.1906	32-1	0.
32	0.23028	SLV5-NL	Min	0.	93.0276	32-1	0.23028
32	0.46056	SLV5-NL	Min	0.	84.5373	32-1	0.46056
32	0.	SLV6-NL	Max	0.	113.3704	32-1	0.
32	0.23028	SLV6-NL	Max	0.	110.0062	32-1	0.23028
32	0.46056	SLV6-NL	Max	0.	102.3055	32-1	0.46056
32	0.	SLV6-NL	Min	0.	113.3704	32-1	0.
32	0.23028	SLV6-NL	Min	0.	110.0062	32-1	0.23028
32	0.46056	SLV6-NL	Min	0.	102.3055	32-1	0.46056
32	0.	SLV7-NL	Max	0.	104.0338	32-1	0.
32	0.23028	SLV7-NL	Max	0.	99.4429	32-1	0.23028
32	0.46056	SLV7-NL	Max	0.	90.2958	32-1	0.46056
32	0.	SLV7-NL	Min	0.	104.0338	32-1	0.
32	0.23028	SLV7-NL	Min	0.	99.4429	32-1	0.23028
32	0.46056	SLV7-NL	Min	0.	90.2958	32-1	0.46056
32	0.	SLV8-NL	Max	0.	120.2043	32-1	0.
32	0.23028	SLV8-NL	Max	0.	116.4078	32-1	0.23028
32	0.46056	SLV8-NL	Max	0.	108.0458	32-1	0.46056
32	0.	SLV8-NL	Min	0.	120.2043	32-1	0.
32	0.23028	SLV8-NL	Min	0.	116.4078	32-1	0.23028
32	0.46056	SLV8-NL	Min	0.	108.0458	32-1	0.46056
32	0.	SLV9-NL	Max	0.	80.0537	32-1	0.
32	0.23028	SLV9-NL	Max	0.	76.8789	32-1	0.23028
32	0.46056	SLV9-NL	Max	0.	69.3059	32-1	0.46056
32	0.	SLV9-NL	Min	0.	80.0537	32-1	0.
32	0.23028	SLV9-NL	Min	0.	76.8789	32-1	0.23028
32	0.46056	SLV9-NL	Min	0.	69.3059	32-1	0.46056
32	0.	SLV10-NL	Max	0.	126.2037	32-1	0.
32	0.23028	SLV10-NL	Max	0.	121.9772	32-1	0.23028
32	0.46056	SLV10-NL	Max	0.	113.3836	32-1	0.46056
32	0.	SLV10-NL	Min	0.	126.2037	32-1	0.
32	0.23028	SLV10-NL	Min	0.	121.9772	32-1	0.23028
32	0.46056	SLV10-NL	Min	0.	113.3836	32-1	0.46056
32	0.	SLV11-NL	Max	0.	86.9144	32-1	0.
32	0.23028	SLV11-NL	Max	0.	83.4043	32-1	0.23028
32	0.46056	SLV11-NL	Max	0.	75.3686	32-1	0.46056
32	0.	SLV11-NL	Min	0.	86.9144	32-1	0.
32	0.23028	SLV11-NL	Min	0.	83.4043	32-1	0.23028
32	0.46056	SLV11-NL	Min	0.	75.3686	32-1	0.46056
32	0.	SLV12-NL	Max	0.	133.054	32-1	0.
32	0.23028	SLV12-NL	Max	0.	128.4874	32-1	0.23028
32	0.46056	SLV12-NL	Max	0.	119.426	32-1	0.46056
32	0.	SLV12-NL	Min	0.	133.054	32-1	0.
32	0.23028	SLV12-NL	Min	0.	128.4874	32-1	0.23028
32	0.46056	SLV12-NL	Min	0.	119.426	32-1	0.46056
32	0.	SLV13-NL	Max	0.	96.9139	32-1	0.
32	0.23028	SLV13-NL	Max	0.	93.3559	32-1	0.23028
32	0.46056	SLV13-NL	Max	0.	85.5593	32-1	0.46056
32	0.	SLV13-NL	Min	0.	96.9139	32-1	0.
32	0.23028	SLV13-NL	Min	0.	93.3559	32-1	0.23028
32	0.46056	SLV13-NL	Min	0.	85.5593	32-1	0.46056
32	0.	SLV14-NL	Max	0.	110.4268	32-1	0.

Table: Element Forces - Frames, Part 2 of 2

Frame	Station	OutputCase	StepType	M2	M3	FrameElem	ElemStation
	m			KN-m	KN-m		m
32	0.23028	SLV14-NL	Max	0.	106.5156	32-1	0.23028
32	0.46056	SLV14-NL	Max	0.	98.3751	32-1	0.46056
32	0.	SLV14-NL	Min	0.	110.4268	32-1	0.
32	0.23028	SLV14-NL	Min	0.	106.5156	32-1	0.23028
32	0.46056	SLV14-NL	Min	0.	98.3751	32-1	0.46056
32	0.	SLV15-NL	Max	0.	119.3316	32-1	0.
32	0.23028	SLV15-NL	Max	0.	114.686	32-1	0.23028
32	0.46056	SLV15-NL	Max	0.	105.3767	32-1	0.46056
32	0.	SLV15-NL	Min	0.	119.3316	32-1	0.
32	0.23028	SLV15-NL	Min	0.	114.686	32-1	0.23028
32	0.46056	SLV15-NL	Min	0.	105.3767	32-1	0.46056
32	0.	SLV16-NL	Max	0.	132.6265	32-1	0.
32	0.23028	SLV16-NL	Max	0.	127.6024	32-1	0.23028
32	0.46056	SLV16-NL	Max	0.	117.9239	32-1	0.46056
32	0.	SLV16-NL	Min	0.	132.6265	32-1	0.
32	0.23028	SLV16-NL	Min	0.	127.6024	32-1	0.23028
32	0.46056	SLV16-NL	Min	0.	117.9239	32-1	0.46056
33	0.	SLU 1-NL	Max	0.	161.8935	33-1	0.
33	0.23028	SLU 1-NL	Max	0.	148.0274	33-1	0.23028
33	0.46056	SLU 1-NL	Max	0.	127.1224	33-1	0.46056
33	0.	SLU 1-NL	Min	0.	161.8935	33-1	0.
33	0.23028	SLU 1-NL	Min	0.	148.0274	33-1	0.23028
33	0.46056	SLU 1-NL	Min	0.	127.1224	33-1	0.46056
33	0.	SLU 2-NL	Max	0.	218.6734	33-1	0.
33	0.23028	SLU 2-NL	Max	0.	198.6814	33-1	0.23028
33	0.46056	SLU 2-NL	Max	0.	171.7248	33-1	0.46056
33	0.	SLU 2-NL	Min	0.	218.6734	33-1	0.
33	0.23028	SLU 2-NL	Min	0.	198.6814	33-1	0.23028
33	0.46056	SLU 2-NL	Min	0.	171.7248	33-1	0.46056
33	0.	SLU 3-NL	Max	0.	40.6303	33-1	0.
33	0.23028	SLU 3-NL	Max	0.	38.7511	33-1	0.23028
33	0.46056	SLU 3-NL	Max	0.	32.5609	33-1	0.46056
33	0.	SLU 3-NL	Min	0.	40.6303	33-1	0.
33	0.23028	SLU 3-NL	Min	0.	38.7511	33-1	0.23028
33	0.46056	SLU 3-NL	Min	0.	32.5609	33-1	0.46056
33	0.	SLU 4-NL	Max	0.	157.4928	33-1	0.
33	0.23028	SLU 4-NL	Max	0.	140.9537	33-1	0.23028
33	0.46056	SLU 4-NL	Max	0.	117.4499	33-1	0.46056
33	0.	SLU 4-NL	Min	0.	157.4928	33-1	0.
33	0.23028	SLU 4-NL	Min	0.	140.9537	33-1	0.23028
33	0.46056	SLU 4-NL	Min	0.	117.4499	33-1	0.46056
33	0.	SLU 5-NL	Max	0.	31.5668	33-1	0.
33	0.23028	SLU 5-NL	Max	0.	27.3441	33-1	0.23028
33	0.46056	SLU 5-NL	Max	0.	18.8847	33-1	0.46056
33	0.	SLU 5-NL	Min	0.	31.5668	33-1	0.
33	0.23028	SLU 5-NL	Min	0.	27.3441	33-1	0.23028
33	0.46056	SLU 5-NL	Min	0.	18.8847	33-1	0.46056
33	0.	SLU 6-NL	Max	0.	173.5	33-1	0.
33	0.23028	SLU 6-NL	Max	0.	160.719	33-1	0.23028
33	0.46056	SLU 6-NL	Max	0.	140.8992	33-1	0.46056
33	0.	SLU 6-NL	Min	0.	173.5	33-1	0.
33	0.23028	SLU 6-NL	Min	0.	160.719	33-1	0.23028
33	0.46056	SLU 6-NL	Min	0.	140.8992	33-1	0.46056
33	0.	SLU 7-NL	Max	0.	48.0746	33-1	0.

Table: Element Forces - Frames, Part 2 of 2

Frame	Station	OutputCase	StepType	M2	M3	FrameElem	ElemStation
	m			KN-m	KN-m		m
33	0.23028	SLU 7-NL	Max	0.	47.7326	33-1	0.23028
33	0.46056	SLU 7-NL	Max	0.	43.0797	33-1	0.46056
33	0.	SLU 7-NL	Min	0.	48.0746	33-1	0.
33	0.23028	SLU 7-NL	Min	0.	47.7326	33-1	0.23028
33	0.46056	SLU 7-NL	Min	0.	43.0797	33-1	0.46056
33	0.	SLE-C-NL	Max	0.	120.9257	33-1	0.
33	0.23028	SLE-C-NL	Max	0.	110.6136	33-1	0.23028
33	0.46056	SLE-C-NL	Max	0.	95.0442	33-1	0.46056
33	0.	SLE-C-NL	Min	0.	120.9257	33-1	0.
33	0.23028	SLE-C-NL	Min	0.	110.6136	33-1	0.23028
33	0.46056	SLE-C-NL	Min	0.	95.0442	33-1	0.46056
33	0.	SLE-F-1-NL	Max	0.	129.1442	33-1	0.
33	0.23028	SLE-F-1-NL	Max	0.	117.7779	33-1	0.23028
33	0.46056	SLE-F-1-NL	Max	0.	101.3826	33-1	0.46056
33	0.	SLE-F-1-NL	Min	0.	129.1442	33-1	0.
33	0.23028	SLE-F-1-NL	Min	0.	117.7779	33-1	0.23028
33	0.46056	SLE-F-1-NL	Min	0.	101.3826	33-1	0.46056
33	0.	SLE-F-2-NL	Max	0.	84.1074	33-1	0.
33	0.23028	SLE-F-2-NL	Max	0.	76.6128	33-1	0.23028
33	0.46056	SLE-F-2-NL	Max	0.	64.8812	33-1	0.46056
33	0.	SLE-F-2-NL	Min	0.	84.1074	33-1	0.
33	0.23028	SLE-F-2-NL	Min	0.	76.6128	33-1	0.23028
33	0.46056	SLE-F-2-NL	Min	0.	64.8812	33-1	0.46056
33	0.	SLE-F-3-NL	Max	0.	89.5501	33-1	0.
33	0.23028	SLE-F-3-NL	Max	0.	83.3346	33-1	0.23028
33	0.46056	SLE-F-3-NL	Max	0.	72.8578	33-1	0.46056
33	0.	SLE-F-3-NL	Min	0.	89.5501	33-1	0.
33	0.23028	SLE-F-3-NL	Min	0.	83.3346	33-1	0.23028
33	0.46056	SLE-F-3-NL	Min	0.	72.8578	33-1	0.46056
33	0.	SLE-QP-NL	Max	0.	97.4179	33-1	0.
33	0.23028	SLE-QP-NL	Max	0.	89.4102	33-1	0.23028
33	0.46056	SLE-QP-NL	Max	0.	77.1653	33-1	0.46056
33	0.	SLE-QP-NL	Min	0.	97.4179	33-1	0.
33	0.23028	SLE-QP-NL	Min	0.	89.4102	33-1	0.23028
33	0.46056	SLE-QP-NL	Min	0.	77.1653	33-1	0.46056
33	0.	SLV1-NL	Max	0.	43.9777	33-1	0.
33	0.23028	SLV1-NL	Max	0.	37.734	33-1	0.23028
33	0.46056	SLV1-NL	Max	0.	27.1077	33-1	0.46056
33	0.	SLV1-NL	Min	0.	43.9777	33-1	0.
33	0.23028	SLV1-NL	Min	0.	37.734	33-1	0.23028
33	0.46056	SLV1-NL	Min	0.	27.1077	33-1	0.46056
33	0.	SLV2-NL	Max	0.	103.8413	33-1	0.
33	0.23028	SLV2-NL	Max	0.	98.3599	33-1	0.23028
33	0.46056	SLV2-NL	Max	0.	88.4443	33-1	0.46056
33	0.	SLV2-NL	Min	0.	103.8413	33-1	0.
33	0.23028	SLV2-NL	Min	0.	98.3599	33-1	0.23028
33	0.46056	SLV2-NL	Min	0.	88.4443	33-1	0.46056
33	0.	SLV3-NL	Max	0.	45.7047	33-1	0.
33	0.23028	SLV3-NL	Max	0.	39.2322	33-1	0.23028
33	0.46056	SLV3-NL	Max	0.	28.3122	33-1	0.46056
33	0.	SLV3-NL	Min	0.	45.7047	33-1	0.
33	0.23028	SLV3-NL	Min	0.	39.2322	33-1	0.23028
33	0.46056	SLV3-NL	Min	0.	28.3122	33-1	0.46056
33	0.	SLV4-NL	Max	0.	105.5645	33-1	0.

Table: Element Forces - Frames, Part 2 of 2

Frame	Station	OutputCase	StepType	M2	M3	FrameElem	ElemStation
	m			KN-m	KN-m		m
33	0.23028	SLV4-NL	Max	0.	99.8535	33-1	0.23028
33	0.46056	SLV4-NL	Max	0.	89.6432	33-1	0.46056
33	0.	SLV4-NL	Min	0.	105.5645	33-1	0.
33	0.23028	SLV4-NL	Min	0.	99.8535	33-1	0.23028
33	0.46056	SLV4-NL	Min	0.	89.6432	33-1	0.46056
33	0.	SLV5-NL	Max	0.	84.5373	33-1	0.
33	0.23028	SLV5-NL	Max	0.	76.8942	33-1	0.23028
33	0.46056	SLV5-NL	Max	0.	64.9263	33-1	0.46056
33	0.	SLV5-NL	Min	0.	84.5373	33-1	0.
33	0.23028	SLV5-NL	Min	0.	76.8942	33-1	0.23028
33	0.46056	SLV5-NL	Min	0.	64.9263	33-1	0.46056
33	0.	SLV6-NL	Max	0.	102.3055	33-1	0.
33	0.23028	SLV6-NL	Max	0.	94.8453	33-1	0.23028
33	0.46056	SLV6-NL	Max	0.	83.0448	33-1	0.46056
33	0.	SLV6-NL	Min	0.	102.3055	33-1	0.
33	0.23028	SLV6-NL	Min	0.	94.8453	33-1	0.23028
33	0.46056	SLV6-NL	Min	0.	83.0448	33-1	0.46056
33	0.	SLV7-NL	Max	0.	90.2958	33-1	0.
33	0.23028	SLV7-NL	Max	0.	81.8913	33-1	0.23028
33	0.46056	SLV7-NL	Max	0.	68.9449	33-1	0.46056
33	0.	SLV7-NL	Min	0.	90.2958	33-1	0.
33	0.23028	SLV7-NL	Min	0.	81.8913	33-1	0.23028
33	0.46056	SLV7-NL	Min	0.	68.9449	33-1	0.46056
33	0.	SLV8-NL	Max	0.	108.0458	33-1	0.
33	0.23028	SLV8-NL	Max	0.	99.8197	33-1	0.23028
33	0.46056	SLV8-NL	Max	0.	87.0363	33-1	0.46056
33	0.	SLV8-NL	Min	0.	108.0458	33-1	0.
33	0.23028	SLV8-NL	Min	0.	99.8197	33-1	0.23028
33	0.46056	SLV8-NL	Min	0.	87.0363	33-1	0.46056
33	0.	SLV9-NL	Max	0.	69.3059	33-1	0.
33	0.23028	SLV9-NL	Max	0.	63.2079	33-1	0.23028
33	0.46056	SLV9-NL	Max	0.	52.7046	33-1	0.46056
33	0.	SLV9-NL	Min	0.	69.3059	33-1	0.
33	0.23028	SLV9-NL	Min	0.	63.2079	33-1	0.23028
33	0.46056	SLV9-NL	Min	0.	52.7046	33-1	0.46056
33	0.	SLV10-NL	Max	0.	113.3836	33-1	0.
33	0.23028	SLV10-NL	Max	0.	104.5733	33-1	0.23028
33	0.46056	SLV10-NL	Max	0.	91.4089	33-1	0.46056
33	0.	SLV10-NL	Min	0.	113.3836	33-1	0.
33	0.23028	SLV10-NL	Min	0.	104.5733	33-1	0.23028
33	0.46056	SLV10-NL	Min	0.	91.4089	33-1	0.46056
33	0.	SLV11-NL	Max	0.	75.3686	33-1	0.
33	0.23028	SLV11-NL	Max	0.	68.6831	33-1	0.23028
33	0.46056	SLV11-NL	Max	0.	57.4696	33-1	0.46056
33	0.	SLV11-NL	Min	0.	75.3686	33-1	0.
33	0.23028	SLV11-NL	Min	0.	68.6831	33-1	0.23028
33	0.46056	SLV11-NL	Min	0.	57.4696	33-1	0.46056
33	0.	SLV12-NL	Max	0.	119.426	33-1	0.
33	0.23028	SLV12-NL	Max	0.	110.0234	33-1	0.23028
33	0.46056	SLV12-NL	Max	0.	96.144	33-1	0.46056
33	0.	SLV12-NL	Min	0.	119.426	33-1	0.
33	0.23028	SLV12-NL	Min	0.	110.0234	33-1	0.23028
33	0.46056	SLV12-NL	Min	0.	96.144	33-1	0.46056
33	0.	SLV13-NL	Max	0.	85.5593	33-1	0.

Table: Element Forces - Frames, Part 2 of 2

Frame	Station	OutputCase	StepType	M2	M3	FrameElem	ElemStation
	m			KN-m	KN-m		m
33	0.23028	SLV13-NL	Max	0.	78.5054	33-1	0.23028
33	0.46056	SLV13-NL	Max	0.	67.2069	33-1	0.46056
33	0.	SLV13-NL	Min	0.	85.5593	33-1	0.
33	0.23028	SLV13-NL	Min	0.	78.5054	33-1	0.23028
33	0.46056	SLV13-NL	Min	0.	67.2069	33-1	0.46056
33	0.	SLV14-NL	Max	0.	98.3751	33-1	0.
33	0.23028	SLV14-NL	Max	0.	90.4775	33-1	0.23028
33	0.46056	SLV14-NL	Max	0.	78.3508	33-1	0.46056
33	0.	SLV14-NL	Min	0.	98.3751	33-1	0.
33	0.23028	SLV14-NL	Min	0.	90.4775	33-1	0.23028
33	0.46056	SLV14-NL	Min	0.	78.3508	33-1	0.46056
33	0.	SLV15-NL	Max	0.	105.3767	33-1	0.
33	0.23028	SLV15-NL	Max	0.	96.4073	33-1	0.23028
33	0.46056	SLV15-NL	Max	0.	82.7847	33-1	0.46056
33	0.	SLV15-NL	Min	0.	105.3767	33-1	0.
33	0.23028	SLV15-NL	Min	0.	96.4073	33-1	0.23028
33	0.46056	SLV15-NL	Min	0.	82.7847	33-1	0.46056
33	0.	SLV16-NL	Max	0.	117.9239	33-1	0.
33	0.23028	SLV16-NL	Max	0.	108.0911	33-1	0.23028
33	0.46056	SLV16-NL	Max	0.	93.6204	33-1	0.46056
33	0.	SLV16-NL	Min	0.	117.9239	33-1	0.
33	0.23028	SLV16-NL	Min	0.	108.0911	33-1	0.23028
33	0.46056	SLV16-NL	Min	0.	93.6204	33-1	0.46056
34	0.	SLU 1-NL	Max	0.	127.1224	34-1	0.
34	0.23028	SLU 1-NL	Max	0.	107.0447	34-1	0.23028
34	0.46056	SLU 1-NL	Max	0.	79.9908	34-1	0.46056
34	0.	SLU 1-NL	Min	0.	127.1224	34-1	0.
34	0.23028	SLU 1-NL	Min	0.	107.0447	34-1	0.23028
34	0.46056	SLU 1-NL	Min	0.	79.9908	34-1	0.46056
34	0.	SLU 2-NL	Max	0.	171.7248	34-1	0.
34	0.23028	SLU 2-NL	Max	0.	143.3899	34-1	0.23028
34	0.46056	SLU 2-NL	Max	0.	108.2234	34-1	0.46056
34	0.	SLU 2-NL	Min	0.	171.7248	34-1	0.
34	0.23028	SLU 2-NL	Min	0.	143.3899	34-1	0.23028
34	0.46056	SLU 2-NL	Min	0.	108.2234	34-1	0.46056
34	0.	SLU 3-NL	Max	0.	32.5609	34-1	0.
34	0.23028	SLU 3-NL	Max	0.	29.1505	34-1	0.23028
34	0.46056	SLU 3-NL	Max	0.	21.3637	34-1	0.46056
34	0.	SLU 3-NL	Min	0.	32.5609	34-1	0.
34	0.23028	SLU 3-NL	Min	0.	29.1505	34-1	0.23028
34	0.46056	SLU 3-NL	Min	0.	21.3637	34-1	0.46056
34	0.	SLU 4-NL	Max	0.	117.4499	34-1	0.
34	0.23028	SLU 4-NL	Max	0.	94.716	34-1	0.23028
34	0.46056	SLU 4-NL	Max	0.	65.1507	34-1	0.46056
34	0.	SLU 4-NL	Min	0.	117.4499	34-1	0.
34	0.23028	SLU 4-NL	Min	0.	94.716	34-1	0.23028
34	0.46056	SLU 4-NL	Min	0.	65.1507	34-1	0.46056
34	0.	SLU 5-NL	Max	0.	18.8847	34-1	0.
34	0.23028	SLU 5-NL	Max	0.	13.2999	34-1	0.23028
34	0.46056	SLU 5-NL	Max	0.	3.4832	34-1	0.46056
34	0.	SLU 5-NL	Min	0.	18.8847	34-1	0.
34	0.23028	SLU 5-NL	Min	0.	13.2999	34-1	0.23028
34	0.46056	SLU 5-NL	Min	0.	3.4832	34-1	0.46056
34	0.	SLU 6-NL	Max	0.	140.8992	34-1	0.

Table: Element Forces - Frames, Part 2 of 2

Frame	Station	OutputCase	StepType	M2	M3	FrameElem	ElemStation
	m			KN-m	KN-m		m
34	0.23028	SLU 6-NL	Max	0.	121.5044	34-1	0.23028
34	0.46056	SLU 6-NL	Max	0.	95.1334	34-1	0.46056
34	0.	SLU 6-NL	Min	0.	140.8992	34-1	0.
34	0.23028	SLU 6-NL	Min	0.	121.5044	34-1	0.23028
34	0.46056	SLU 6-NL	Min	0.	95.1334	34-1	0.46056
34	0.	SLU 7-NL	Max	0.	43.0797	34-1	0.
34	0.23028	SLU 7-NL	Max	0.	40.9534	34-1	0.23028
34	0.46056	SLU 7-NL	Max	0.	34.4505	34-1	0.46056
34	0.	SLU 7-NL	Min	0.	43.0797	34-1	0.
34	0.23028	SLU 7-NL	Min	0.	40.9534	34-1	0.23028
34	0.46056	SLU 7-NL	Min	0.	34.4505	34-1	0.46056
34	0.	SLE-C-NL	Max	0.	95.0442	34-1	0.
34	0.23028	SLE-C-NL	Max	0.	80.1027	34-1	0.23028
34	0.46056	SLE-C-NL	Max	0.	59.9462	34-1	0.46056
34	0.	SLE-C-NL	Min	0.	95.0442	34-1	0.
34	0.23028	SLE-C-NL	Min	0.	80.1027	34-1	0.23028
34	0.46056	SLE-C-NL	Min	0.	59.9462	34-1	0.46056
34	0.	SLE-F-1-NL	Max	0.	101.3826	34-1	0.
34	0.23028	SLE-F-1-NL	Max	0.	85.0708	34-1	0.23028
34	0.46056	SLE-F-1-NL	Max	0.	63.7871	34-1	0.46056
34	0.	SLE-F-1-NL	Min	0.	101.3826	34-1	0.
34	0.23028	SLE-F-1-NL	Min	0.	85.0708	34-1	0.23028
34	0.46056	SLE-F-1-NL	Min	0.	63.7871	34-1	0.46056
34	0.	SLE-F-2-NL	Max	0.	64.8812	34-1	0.
34	0.23028	SLE-F-2-NL	Max	0.	54.1999	34-1	0.23028
34	0.46056	SLE-F-2-NL	Max	0.	39.2864	34-1	0.46056
34	0.	SLE-F-2-NL	Min	0.	64.8812	34-1	0.
34	0.23028	SLE-F-2-NL	Min	0.	54.1999	34-1	0.23028
34	0.46056	SLE-F-2-NL	Min	0.	39.2864	34-1	0.46056
34	0.	SLE-F-3-NL	Max	0.	72.8578	34-1	0.
34	0.23028	SLE-F-3-NL	Max	0.	63.3168	34-1	0.23028
34	0.46056	SLE-F-3-NL	Max	0.	49.4971	34-1	0.46056
34	0.	SLE-F-3-NL	Min	0.	72.8578	34-1	0.
34	0.23028	SLE-F-3-NL	Min	0.	63.3168	34-1	0.23028
34	0.46056	SLE-F-3-NL	Min	0.	49.4971	34-1	0.46056
34	0.	SLE-QP-NL	Max	0.	77.1653	34-1	0.
34	0.23028	SLE-QP-NL	Max	0.	65.4946	34-1	0.23028
34	0.46056	SLE-QP-NL	Max	0.	49.5917	34-1	0.46056
34	0.	SLE-QP-NL	Min	0.	77.1653	34-1	0.
34	0.23028	SLE-QP-NL	Min	0.	65.4946	34-1	0.23028
34	0.46056	SLE-QP-NL	Min	0.	49.5917	34-1	0.46056
34	0.	SLV1-NL	Max	0.	27.1077	34-1	0.
34	0.23028	SLV1-NL	Max	0.	19.0857	34-1	0.23028
34	0.46056	SLV1-NL	Max	0.	6.7008	34-1	0.46056
34	0.	SLV1-NL	Min	0.	27.1077	34-1	0.
34	0.23028	SLV1-NL	Min	0.	19.0857	34-1	0.23028
34	0.46056	SLV1-NL	Min	0.	6.7008	34-1	0.46056
34	0.	SLV2-NL	Max	0.	88.4443	34-1	0.
34	0.23028	SLV2-NL	Max	0.	79.038	34-1	0.23028
34	0.46056	SLV2-NL	Max	0.	65.1972	34-1	0.46056
34	0.	SLV2-NL	Min	0.	88.4443	34-1	0.
34	0.23028	SLV2-NL	Min	0.	79.038	34-1	0.23028
34	0.46056	SLV2-NL	Min	0.	65.1972	34-1	0.46056
34	0.	SLV3-NL	Max	0.	28.3122	34-1	0.

Table: Element Forces - Frames, Part 2 of 2

Frame	Station	OutputCase	StepType	M2	M3	FrameElem	ElemStation
	m			KN-m	KN-m		m
34	0.23028	SLV3-NL	Max	0.	19.9759	34-1	0.23028
34	0.46056	SLV3-NL	Max	0.	7.2169	34-1	0.46056
34	0.	SLV3-NL	Min	0.	28.3122	34-1	0.
34	0.23028	SLV3-NL	Min	0.	19.9759	34-1	0.23028
34	0.46056	SLV3-NL	Min	0.	7.2169	34-1	0.46056
34	0.	SLV4-NL	Max	0.	89.6432	34-1	0.
34	0.23028	SLV4-NL	Max	0.	79.9217	34-1	0.23028
34	0.46056	SLV4-NL	Max	0.	65.7059	34-1	0.46056
34	0.	SLV4-NL	Min	0.	89.6432	34-1	0.
34	0.23028	SLV4-NL	Min	0.	79.9217	34-1	0.23028
34	0.46056	SLV4-NL	Min	0.	65.7059	34-1	0.46056
34	0.	SLV5-NL	Max	0.	64.9263	34-1	0.
34	0.23028	SLV5-NL	Max	0.	54.0977	34-1	0.23028
34	0.46056	SLV5-NL	Max	0.	38.9509	34-1	0.46056
34	0.	SLV5-NL	Min	0.	64.9263	34-1	0.
34	0.23028	SLV5-NL	Min	0.	54.0977	34-1	0.23028
34	0.46056	SLV5-NL	Min	0.	38.9509	34-1	0.46056
34	0.	SLV6-NL	Max	0.	83.0448	34-1	0.
34	0.23028	SLV6-NL	Max	0.	71.7568	34-1	0.23028
34	0.46056	SLV6-NL	Max	0.	56.129	34-1	0.46056
34	0.	SLV6-NL	Min	0.	83.0448	34-1	0.
34	0.23028	SLV6-NL	Min	0.	71.7568	34-1	0.23028
34	0.46056	SLV6-NL	Min	0.	56.129	34-1	0.46056
34	0.	SLV7-NL	Max	0.	68.9449	34-1	0.
34	0.23028	SLV7-NL	Max	0.	57.0696	34-1	0.23028
34	0.46056	SLV7-NL	Max	0.	40.6766	34-1	0.46056
34	0.	SLV7-NL	Min	0.	68.9449	34-1	0.
34	0.23028	SLV7-NL	Min	0.	57.0696	34-1	0.23028
34	0.46056	SLV7-NL	Min	0.	40.6766	34-1	0.46056
34	0.	SLV8-NL	Max	0.	87.0363	34-1	0.
34	0.23028	SLV8-NL	Max	0.	74.6973	34-1	0.23028
34	0.46056	SLV8-NL	Max	0.	57.819	34-1	0.46056
34	0.	SLV8-NL	Min	0.	87.0363	34-1	0.
34	0.23028	SLV8-NL	Min	0.	74.6973	34-1	0.23028
34	0.46056	SLV8-NL	Min	0.	57.819	34-1	0.46056
34	0.	SLV9-NL	Max	0.	52.7046	34-1	0.
34	0.23028	SLV9-NL	Max	0.	43.92	34-1	0.23028
34	0.46056	SLV9-NL	Max	0.	30.7289	34-1	0.46056
34	0.	SLV9-NL	Min	0.	52.7046	34-1	0.
34	0.23028	SLV9-NL	Min	0.	43.92	34-1	0.23028
34	0.46056	SLV9-NL	Min	0.	30.7289	34-1	0.46056
34	0.	SLV10-NL	Max	0.	91.4089	34-1	0.
34	0.23028	SLV10-NL	Max	0.	78.3604	34-1	0.23028
34	0.46056	SLV10-NL	Max	0.	60.9765	34-1	0.46056
34	0.	SLV10-NL	Min	0.	91.4089	34-1	0.
34	0.23028	SLV10-NL	Min	0.	78.3604	34-1	0.23028
34	0.46056	SLV10-NL	Min	0.	60.9765	34-1	0.46056
34	0.	SLV11-NL	Max	0.	57.4696	34-1	0.
34	0.23028	SLV11-NL	Max	0.	47.8701	34-1	0.23028
34	0.46056	SLV11-NL	Max	0.	33.7486	34-1	0.46056
34	0.	SLV11-NL	Min	0.	57.4696	34-1	0.
34	0.23028	SLV11-NL	Min	0.	47.8701	34-1	0.23028
34	0.46056	SLV11-NL	Min	0.	33.7486	34-1	0.46056
34	0.	SLV12-NL	Max	0.	96.144	34-1	0.

Table: Element Forces - Frames, Part 2 of 2

Frame	Station	OutputCase	StepType	M2	M3	FrameElem	ElemStation
	m			KN-m	KN-m		m
34	0.23028	SLV12-NL	Max	0.	82.2759	34-1	0.23028
34	0.46056	SLV12-NL	Max	0.	63.957	34-1	0.46056
34	0.	SLV12-NL	Min	0.	96.144	34-1	0.
34	0.23028	SLV12-NL	Min	0.	82.2759	34-1	0.23028
34	0.46056	SLV12-NL	Min	0.	63.957	34-1	0.46056
34	0.	SLV13-NL	Max	0.	67.2069	34-1	0.
34	0.23028	SLV13-NL	Max	0.	56.9102	34-1	0.23028
34	0.46056	SLV13-NL	Max	0.	42.3664	34-1	0.46056
34	0.	SLV13-NL	Min	0.	67.2069	34-1	0.
34	0.23028	SLV13-NL	Min	0.	56.9102	34-1	0.23028
34	0.46056	SLV13-NL	Min	0.	42.3664	34-1	0.46056
34	0.	SLV14-NL	Max	0.	78.3508	34-1	0.
34	0.23028	SLV14-NL	Max	0.	66.7531	34-1	0.23028
34	0.46056	SLV14-NL	Max	0.	50.9297	34-1	0.46056
34	0.	SLV14-NL	Min	0.	78.3508	34-1	0.
34	0.23028	SLV14-NL	Min	0.	66.7531	34-1	0.23028
34	0.46056	SLV14-NL	Min	0.	50.9297	34-1	0.46056
34	0.	SLV15-NL	Max	0.	82.7847	34-1	0.
34	0.23028	SLV15-NL	Max	0.	69.8272	34-1	0.23028
34	0.46056	SLV15-NL	Max	0.	52.2379	34-1	0.46056
34	0.	SLV15-NL	Min	0.	82.7847	34-1	0.
34	0.23028	SLV15-NL	Min	0.	69.8272	34-1	0.23028
34	0.46056	SLV15-NL	Min	0.	52.2379	34-1	0.46056
34	0.	SLV16-NL	Max	0.	93.6204	34-1	0.
34	0.23028	SLV16-NL	Max	0.	79.3479	34-1	0.23028
34	0.46056	SLV16-NL	Max	0.	60.4649	34-1	0.46056
34	0.	SLV16-NL	Min	0.	93.6204	34-1	0.
34	0.23028	SLV16-NL	Min	0.	79.3479	34-1	0.23028
34	0.46056	SLV16-NL	Min	0.	60.4649	34-1	0.46056
35	0.	SLU 1-NL	Max	0.	79.9908	35-1	0.
35	0.23028	SLU 1-NL	Max	0.	54.4258	35-1	0.23028
35	0.46056	SLU 1-NL	Max	0.	21.9746	35-1	0.46056
35	0.	SLU 1-NL	Min	0.	79.9908	35-1	0.
35	0.23028	SLU 1-NL	Min	0.	54.4258	35-1	0.23028
35	0.46056	SLU 1-NL	Min	0.	21.9746	35-1	0.46056
35	0.	SLU 2-NL	Max	0.	108.2234	35-1	0.
35	0.23028	SLU 2-NL	Max	0.	72.5899	35-1	0.23028
35	0.46056	SLU 2-NL	Max	0.	30.3077	35-1	0.46056
35	0.	SLU 2-NL	Min	0.	108.2234	35-1	0.
35	0.23028	SLU 2-NL	Min	0.	72.5899	35-1	0.23028
35	0.46056	SLU 2-NL	Min	0.	30.3077	35-1	0.46056
35	0.	SLU 3-NL	Max	0.	21.3637	35-1	0.
35	0.23028	SLU 3-NL	Max	0.	16.4699	35-1	0.23028
35	0.46056	SLU 3-NL	Max	0.	7.121	35-1	0.46056
35	0.	SLU 3-NL	Min	0.	21.3637	35-1	0.
35	0.23028	SLU 3-NL	Min	0.	16.4699	35-1	0.23028
35	0.46056	SLU 3-NL	Min	0.	7.121	35-1	0.46056
35	0.	SLU 4-NL	Max	0.	65.1507	35-1	0.
35	0.23028	SLU 4-NL	Max	0.	37.2062	35-1	0.23028
35	0.46056	SLU 4-NL	Max	0.	2.6133	35-1	0.46056
35	0.	SLU 4-NL	Min	0.	65.1507	35-1	0.
35	0.23028	SLU 4-NL	Min	0.	37.2062	35-1	0.23028
35	0.46056	SLU 4-NL	Min	0.	2.6133	35-1	0.46056
35	0.	SLU 5-NL	Max	0.	3.4832	35-1	0.

Table: Element Forces - Frames, Part 2 of 2

Frame	Station	OutputCase	StepType	M2	M3	FrameElem	ElemStation
	m			KN-m	KN-m		m
35	0.23028	SLU 5-NL	Max	0.	-3.1618	35-1	0.23028
35	0.46056	SLU 5-NL	Max	0.	-14.0243	35-1	0.46056
35	0.	SLU 5-NL	Min	0.	3.4832	35-1	0.
35	0.23028	SLU 5-NL	Min	0.	-3.1618	35-1	0.23028
35	0.46056	SLU 5-NL	Min	0.	-14.0243	35-1	0.46056
35	0.	SLU 6-NL	Max	0.	95.1334	35-1	0.
35	0.23028	SLU 6-NL	Max	0.	69.8411	35-1	0.23028
35	0.46056	SLU 6-NL	Max	0.	37.6624	35-1	0.46056
35	0.	SLU 6-NL	Min	0.	95.1334	35-1	0.
35	0.23028	SLU 6-NL	Min	0.	69.8411	35-1	0.23028
35	0.46056	SLU 6-NL	Min	0.	37.6624	35-1	0.46056
35	0.	SLU 7-NL	Max	0.	34.4505	35-1	0.
35	0.23028	SLU 7-NL	Max	0.	30.5732	35-1	0.23028
35	0.46056	SLU 7-NL	Max	0.	22.2406	35-1	0.46056
35	0.	SLU 7-NL	Min	0.	34.4505	35-1	0.
35	0.23028	SLU 7-NL	Min	0.	30.5732	35-1	0.23028
35	0.46056	SLU 7-NL	Min	0.	22.2406	35-1	0.46056
35	0.	SLE-C-NL	Max	0.	59.9462	35-1	0.
35	0.23028	SLE-C-NL	Max	0.	40.9071	35-1	0.23028
35	0.46056	SLE-C-NL	Max	0.	16.7149	35-1	0.46056
35	0.	SLE-C-NL	Min	0.	59.9462	35-1	0.
35	0.23028	SLE-C-NL	Min	0.	40.9071	35-1	0.23028
35	0.46056	SLE-C-NL	Min	0.	16.7149	35-1	0.46056
35	0.	SLE-F-1-NL	Max	0.	63.7871	35-1	0.
35	0.23028	SLE-F-1-NL	Max	0.	43.1234	35-1	0.23028
35	0.46056	SLE-F-1-NL	Max	0.	17.5682	35-1	0.46056
35	0.	SLE-F-1-NL	Min	0.	63.7871	35-1	0.
35	0.23028	SLE-F-1-NL	Min	0.	43.1234	35-1	0.23028
35	0.46056	SLE-F-1-NL	Min	0.	17.5682	35-1	0.46056
35	0.	SLE-F-2-NL	Max	0.	39.2864	35-1	0.
35	0.23028	SLE-F-2-NL	Max	0.	25.7758	35-1	0.23028
35	0.46056	SLE-F-2-NL	Max	0.	8.0476	35-1	0.46056
35	0.	SLE-F-2-NL	Min	0.	39.2864	35-1	0.
35	0.23028	SLE-F-2-NL	Min	0.	25.7758	35-1	0.23028
35	0.46056	SLE-F-2-NL	Min	0.	8.0476	35-1	0.46056
35	0.	SLE-F-3-NL	Max	0.	49.4971	35-1	0.
35	0.23028	SLE-F-3-NL	Max	0.	36.9029	35-1	0.23028
35	0.46056	SLE-F-3-NL	Max	0.	20.0165	35-1	0.46056
35	0.	SLE-F-3-NL	Min	0.	49.4971	35-1	0.
35	0.23028	SLE-F-3-NL	Min	0.	36.9029	35-1	0.23028
35	0.46056	SLE-F-3-NL	Min	0.	20.0165	35-1	0.46056
35	0.	SLE-QP-NL	Max	0.	49.5917	35-1	0.
35	0.23028	SLE-QP-NL	Max	0.	34.6264	35-1	0.23028
35	0.46056	SLE-QP-NL	Max	0.	15.4434	35-1	0.46056
35	0.	SLE-QP-NL	Min	0.	49.5917	35-1	0.
35	0.23028	SLE-QP-NL	Min	0.	34.6264	35-1	0.23028
35	0.46056	SLE-QP-NL	Min	0.	15.4434	35-1	0.46056
35	0.	SLV1-NL	Max	0.	6.7008	35-1	0.
35	0.23028	SLV1-NL	Max	0.	-2.7145	35-1	0.23028
35	0.46056	SLV1-NL	Max	0.	-16.4625	35-1	0.46056
35	0.	SLV1-NL	Min	0.	6.7008	35-1	0.
35	0.23028	SLV1-NL	Min	0.	-2.7145	35-1	0.23028
35	0.46056	SLV1-NL	Min	0.	-16.4625	35-1	0.46056
35	0.	SLV2-NL	Max	0.	65.1972	35-1	0.

Table: Element Forces - Frames, Part 2 of 2

Frame	Station	OutputCase	StepType	M2	M3	FrameElem	ElemStation
	m			KN-m	KN-m		m
35	0.23028	SLV2-NL	Max	0.	52.1878	35-1	0.23028
35	0.46056	SLV2-NL	Max	0.	34.755	35-1	0.46056
35	0.	SLV2-NL	Min	0.	65.1972	35-1	0.
35	0.23028	SLV2-NL	Min	0.	52.1878	35-1	0.23028
35	0.46056	SLV2-NL	Min	0.	34.755	35-1	0.46056
35	0.	SLV3-NL	Max	0.	7.2169	35-1	0.
35	0.23028	SLV3-NL	Max	0.	-2.5786	35-1	0.23028
35	0.46056	SLV3-NL	Max	0.	-16.76	35-1	0.46056
35	0.	SLV3-NL	Min	0.	7.2169	35-1	0.
35	0.23028	SLV3-NL	Min	0.	-2.5786	35-1	0.23028
35	0.46056	SLV3-NL	Min	0.	-16.76	35-1	0.46056
35	0.	SLV4-NL	Max	0.	65.7059	35-1	0.
35	0.23028	SLV4-NL	Max	0.	52.3154	35-1	0.23028
35	0.46056	SLV4-NL	Max	0.	34.4482	35-1	0.46056
35	0.	SLV4-NL	Min	0.	65.7059	35-1	0.
35	0.23028	SLV4-NL	Min	0.	52.3154	35-1	0.23028
35	0.46056	SLV4-NL	Min	0.	34.4482	35-1	0.46056
35	0.	SLV5-NL	Max	0.	38.9509	35-1	0.
35	0.23028	SLV5-NL	Max	0.	25.3061	35-1	0.23028
35	0.46056	SLV5-NL	Max	0.	7.3589	35-1	0.46056
35	0.	SLV5-NL	Min	0.	38.9509	35-1	0.
35	0.23028	SLV5-NL	Min	0.	25.3061	35-1	0.23028
35	0.46056	SLV5-NL	Min	0.	7.3589	35-1	0.46056
35	0.	SLV6-NL	Max	0.	56.129	35-1	0.
35	0.23028	SLV6-NL	Max	0.	41.364	35-1	0.23028
35	0.46056	SLV6-NL	Max	0.	22.2694	35-1	0.46056
35	0.	SLV6-NL	Min	0.	56.129	35-1	0.
35	0.23028	SLV6-NL	Min	0.	41.364	35-1	0.23028
35	0.46056	SLV6-NL	Min	0.	22.2694	35-1	0.46056
35	0.	SLV7-NL	Max	0.	40.6766	35-1	0.
35	0.23028	SLV7-NL	Max	0.	25.7654	35-1	0.23028
35	0.46056	SLV7-NL	Max	0.	6.3742	35-1	0.46056
35	0.	SLV7-NL	Min	0.	40.6766	35-1	0.
35	0.23028	SLV7-NL	Min	0.	25.7654	35-1	0.23028
35	0.46056	SLV7-NL	Min	0.	6.3742	35-1	0.46056
35	0.	SLV8-NL	Max	0.	57.819	35-1	0.
35	0.23028	SLV8-NL	Max	0.	41.7835	35-1	0.23028
35	0.46056	SLV8-NL	Max	0.	21.2407	35-1	0.46056
35	0.	SLV8-NL	Min	0.	57.819	35-1	0.
35	0.23028	SLV8-NL	Min	0.	41.7835	35-1	0.23028
35	0.46056	SLV8-NL	Min	0.	21.2407	35-1	0.46056
35	0.	SLV9-NL	Max	0.	30.7289	35-1	0.
35	0.23028	SLV9-NL	Max	0.	19.5689	35-1	0.23028
35	0.46056	SLV9-NL	Max	0.	4.0122	35-1	0.46056
35	0.	SLV9-NL	Min	0.	30.7289	35-1	0.
35	0.23028	SLV9-NL	Min	0.	19.5689	35-1	0.23028
35	0.46056	SLV9-NL	Min	0.	4.0122	35-1	0.46056
35	0.	SLV10-NL	Max	0.	60.9765	35-1	0.
35	0.23028	SLV10-NL	Max	0.	44.1247	35-1	0.23028
35	0.46056	SLV10-NL	Max	0.	22.9662	35-1	0.46056
35	0.	SLV10-NL	Min	0.	60.9765	35-1	0.
35	0.23028	SLV10-NL	Min	0.	44.1247	35-1	0.23028
35	0.46056	SLV10-NL	Min	0.	22.9662	35-1	0.46056
35	0.	SLV11-NL	Max	0.	33.7486	35-1	0.

Table: Element Forces - Frames, Part 2 of 2

Frame	Station	OutputCase	StepType	M2	M3	FrameElem	ElemStation
	m			KN-m	KN-m		m
35	0.23028	SLV11-NL	Max	0.	21.5804	35-1	0.23028
35	0.46056	SLV11-NL	Max	0.	4.9093	35-1	0.46056
35	0.	SLV11-NL	Min	0.	33.7486	35-1	0.
35	0.23028	SLV11-NL	Min	0.	21.5804	35-1	0.23028
35	0.46056	SLV11-NL	Min	0.	4.9093	35-1	0.46056
35	0.	SLV12-NL	Max	0.	63.957	35-1	0.
35	0.23028	SLV12-NL	Max	0.	46.0924	35-1	0.23028
35	0.46056	SLV12-NL	Max	0.	23.8148	35-1	0.46056
35	0.	SLV12-NL	Min	0.	63.957	35-1	0.
35	0.23028	SLV12-NL	Min	0.	46.0924	35-1	0.23028
35	0.46056	SLV12-NL	Min	0.	23.8148	35-1	0.46056
35	0.	SLV13-NL	Max	0.	42.3664	35-1	0.
35	0.23028	SLV13-NL	Max	0.	29.1523	35-1	0.23028
35	0.46056	SLV13-NL	Max	0.	11.697	35-1	0.46056
35	0.	SLV13-NL	Min	0.	42.3664	35-1	0.
35	0.23028	SLV13-NL	Min	0.	29.1523	35-1	0.23028
35	0.46056	SLV13-NL	Min	0.	11.697	35-1	0.46056
35	0.	SLV14-NL	Max	0.	50.9297	35-1	0.
35	0.23028	SLV14-NL	Max	0.	35.9944	35-1	0.23028
35	0.46056	SLV14-NL	Max	0.	16.8451	35-1	0.46056
35	0.	SLV14-NL	Min	0.	50.9297	35-1	0.
35	0.23028	SLV14-NL	Min	0.	35.9944	35-1	0.23028
35	0.46056	SLV14-NL	Min	0.	16.8451	35-1	0.46056
35	0.	SLV15-NL	Max	0.	52.2379	35-1	0.
35	0.23028	SLV15-NL	Max	0.	35.7306	35-1	0.23028
35	0.46056	SLV15-NL	Max	0.	14.6277	35-1	0.46056
35	0.	SLV15-NL	Min	0.	52.2379	35-1	0.
35	0.23028	SLV15-NL	Min	0.	35.7306	35-1	0.23028
35	0.46056	SLV15-NL	Min	0.	14.6277	35-1	0.46056
35	0.	SLV16-NL	Max	0.	60.4649	35-1	0.
35	0.23028	SLV16-NL	Max	0.	42.2285	35-1	0.23028
35	0.46056	SLV16-NL	Max	0.	19.4234	35-1	0.46056
35	0.	SLV16-NL	Min	0.	60.4649	35-1	0.
35	0.23028	SLV16-NL	Min	0.	42.2285	35-1	0.23028
35	0.46056	SLV16-NL	Min	0.	19.4234	35-1	0.46056
36	0.	SLU 1-NL	Max	0.	21.9746	36-1	0.
36	0.41857	SLU 1-NL	Max	0.	-40.456	36-1	0.41857
36	0.41857	SLU 1-NL	Max	0.	-40.456	36-2	0.
36	0.83713	SLU 1-NL	Max	0.	-126.5008	36-2	0.41857
36	0.83713	SLU 1-NL	Max	0.	-126.5008	36-3	0.
36	1.04642	SLU 1-NL	Max	0.	-178.882	36-3	0.20928
36	1.2557	SLU 1-NL	Max	0.	-237.7699	36-3	0.41857
36	1.2557	SLU 1-NL	Max	0.	-237.7699	36-4	0.
36	1.67427	SLU 1-NL	Max	0.	-375.8735	36-4	0.41857
36	1.67427	SLU 1-NL	Max	0.	-375.8735	36-5	0.
36	2.09284	SLU 1-NL	Max	0.	-542.4223	36-5	0.41857
36	0.	SLU 1-NL	Min	0.	21.9746	36-1	0.
36	0.41857	SLU 1-NL	Min	0.	-40.456	36-1	0.41857
36	0.41857	SLU 1-NL	Min	0.	-40.456	36-2	0.
36	0.83713	SLU 1-NL	Min	0.	-126.5008	36-2	0.41857
36	0.83713	SLU 1-NL	Min	0.	-126.5008	36-3	0.
36	1.04642	SLU 1-NL	Min	0.	-178.882	36-3	0.20928
36	1.2557	SLU 1-NL	Min	0.	-237.7699	36-3	0.41857
36	1.2557	SLU 1-NL	Min	0.	-237.7699	36-4	0.

Table: Element Forces - Frames, Part 2 of 2

Frame	Station	OutputCase	StepType	M2	M3	FrameElem	ElemStation
	m			KN-m	KN-m		m
36	1.67427	SLU 1-NL	Min	0.	-375.8735	36-4	0.41857
36	1.67427	SLU 1-NL	Min	0.	-375.8735	36-5	0.
36	2.09284	SLU 1-NL	Min	0.	-542.4223	36-5	0.41857
36	0.	SLU 2-NL	Max	0.	30.3077	36-1	0.
36	0.41857	SLU 2-NL	Max	0.	-52.2398	36-1	0.41857
36	0.41857	SLU 2-NL	Max	0.	-52.2398	36-2	0.
36	0.83713	SLU 2-NL	Max	0.	-157.2871	36-2	0.41857
36	0.83713	SLU 2-NL	Max	0.	-157.2871	36-3	0.
36	1.04642	SLU 2-NL	Max	0.	-218.743	36-3	0.20928
36	1.2557	SLU 2-NL	Max	0.	-286.4163	36-3	0.41857
36	1.2557	SLU 2-NL	Max	0.	-286.4163	36-4	0.
36	1.67427	SLU 2-NL	Max	0.	-441.2102	36-4	0.41857
36	1.67427	SLU 2-NL	Max	0.	-441.2102	36-5	0.
36	2.09284	SLU 2-NL	Max	0.	-623.2512	36-5	0.41857
36	0.	SLU 2-NL	Min	0.	30.3077	36-1	0.
36	0.41857	SLU 2-NL	Min	0.	-52.2398	36-1	0.41857
36	0.41857	SLU 2-NL	Min	0.	-52.2398	36-2	0.
36	0.83713	SLU 2-NL	Min	0.	-157.2871	36-2	0.41857
36	0.83713	SLU 2-NL	Min	0.	-157.2871	36-3	0.
36	1.04642	SLU 2-NL	Min	0.	-218.743	36-3	0.20928
36	1.2557	SLU 2-NL	Min	0.	-286.4163	36-3	0.41857
36	1.2557	SLU 2-NL	Min	0.	-286.4163	36-4	0.
36	1.67427	SLU 2-NL	Min	0.	-441.2102	36-4	0.41857
36	1.67427	SLU 2-NL	Min	0.	-441.2102	36-5	0.
36	2.09284	SLU 2-NL	Min	0.	-623.2512	36-5	0.41857
36	0.	SLU 3-NL	Max	0.	7.121	36-1	0.
36	0.41857	SLU 3-NL	Max	0.	-9.8064	36-1	0.41857
36	0.41857	SLU 3-NL	Max	0.	-9.8064	36-2	0.
36	0.83713	SLU 3-NL	Max	0.	-42.6258	36-2	0.41857
36	0.83713	SLU 3-NL	Max	0.	-42.6258	36-3	0.
36	1.04642	SLU 3-NL	Max	0.	-65.3909	36-3	0.20928
36	1.2557	SLU 3-NL	Max	0.	-92.6039	36-3	0.41857
36	1.2557	SLU 3-NL	Max	0.	-92.6039	36-4	0.
36	1.67427	SLU 3-NL	Max	0.	-161.0076	36-4	0.41857
36	1.67427	SLU 3-NL	Max	0.	-161.0076	36-5	0.
36	2.09284	SLU 3-NL	Max	0.	-249.1037	36-5	0.41857
36	0.	SLU 3-NL	Min	0.	7.121	36-1	0.
36	0.41857	SLU 3-NL	Min	0.	-9.8064	36-1	0.41857
36	0.41857	SLU 3-NL	Min	0.	-9.8064	36-2	0.
36	0.83713	SLU 3-NL	Min	0.	-42.6258	36-2	0.41857
36	0.83713	SLU 3-NL	Min	0.	-42.6258	36-3	0.
36	1.04642	SLU 3-NL	Min	0.	-65.3909	36-3	0.20928
36	1.2557	SLU 3-NL	Min	0.	-92.6039	36-3	0.41857
36	1.2557	SLU 3-NL	Min	0.	-92.6039	36-4	0.
36	1.67427	SLU 3-NL	Min	0.	-161.0076	36-4	0.41857
36	1.67427	SLU 3-NL	Min	0.	-161.0076	36-5	0.
36	2.09284	SLU 3-NL	Min	0.	-249.1037	36-5	0.41857
36	0.	SLU 4-NL	Max	0.	2.6133	36-1	0.
36	0.41857	SLU 4-NL	Max	0.	-62.8473	36-1	0.41857
36	0.41857	SLU 4-NL	Max	0.	-62.8473	36-2	0.
36	0.83713	SLU 4-NL	Max	0.	-150.8043	36-2	0.41857
36	0.83713	SLU 4-NL	Max	0.	-150.8043	36-3	0.
36	1.04642	SLU 4-NL	Max	0.	-203.7135	36-3	0.20928
36	1.2557	SLU 4-NL	Max	0.	-262.8399	36-3	0.41857

Table: Element Forces - Frames, Part 2 of 2

Frame	Station	OutputCase	StepType	M2	M3	FrameElem	ElemStation
	m			KN-m	KN-m		m
36	1.2557	SLU 4-NL	Max	0.	-262.8399	36-4	0.
36	1.67427	SLU 4-NL	Max	0.	-400.5364	36-4	0.41857
36	1.67427	SLU 4-NL	Max	0.	-400.5364	36-5	0.
36	2.09284	SLU 4-NL	Max	0.	-565.4764	36-5	0.41857
36	0.	SLU 4-NL	Min	0.	2.6133	36-1	0.
36	0.41857	SLU 4-NL	Min	0.	-62.8473	36-1	0.41857
36	0.41857	SLU 4-NL	Min	0.	-62.8473	36-2	0.
36	0.83713	SLU 4-NL	Min	0.	-150.8043	36-2	0.41857
36	0.83713	SLU 4-NL	Min	0.	-150.8043	36-3	0.
36	1.04642	SLU 4-NL	Min	0.	-203.7135	36-3	0.20928
36	1.2557	SLU 4-NL	Min	0.	-262.8399	36-3	0.41857
36	1.2557	SLU 4-NL	Min	0.	-262.8399	36-4	0.
36	1.67427	SLU 4-NL	Min	0.	-400.5364	36-4	0.41857
36	1.67427	SLU 4-NL	Min	0.	-400.5364	36-5	0.
36	2.09284	SLU 4-NL	Min	0.	-565.4764	36-5	0.41857
36	0.	SLU 5-NL	Max	0.	-14.0243	36-1	0.
36	0.41857	SLU 5-NL	Max	0.	-32.6234	36-1	0.41857
36	0.41857	SLU 5-NL	Max	0.	-32.6234	36-2	0.
36	0.83713	SLU 5-NL	Max	0.	-65.9973	36-2	0.41857
36	0.83713	SLU 5-NL	Max	0.	-65.9973	36-3	0.
36	1.04642	SLU 5-NL	Max	0.	-88.6119	36-3	0.20928
36	1.2557	SLU 5-NL	Max	0.	-115.385	36-3	0.41857
36	1.2557	SLU 5-NL	Max	0.	-115.385	36-4	0.
36	1.67427	SLU 5-NL	Max	0.	-182.0255	36-4	0.41857
36	1.67427	SLU 5-NL	Max	0.	-182.0255	36-5	0.
36	2.09284	SLU 5-NL	Max	0.	-267.1577	36-5	0.41857
36	0.	SLU 5-NL	Min	0.	-14.0243	36-1	0.
36	0.41857	SLU 5-NL	Min	0.	-32.6234	36-1	0.41857
36	0.41857	SLU 5-NL	Min	0.	-32.6234	36-2	0.
36	0.83713	SLU 5-NL	Min	0.	-65.9973	36-2	0.41857
36	0.83713	SLU 5-NL	Min	0.	-65.9973	36-3	0.
36	1.04642	SLU 5-NL	Min	0.	-88.6119	36-3	0.20928
36	1.2557	SLU 5-NL	Min	0.	-115.385	36-3	0.41857
36	1.2557	SLU 5-NL	Min	0.	-115.385	36-4	0.
36	1.67427	SLU 5-NL	Min	0.	-182.0255	36-4	0.41857
36	1.67427	SLU 5-NL	Min	0.	-182.0255	36-5	0.
36	2.09284	SLU 5-NL	Min	0.	-267.1577	36-5	0.41857
36	0.	SLU 6-NL	Max	0.	37.6624	36-1	0.
36	0.41857	SLU 6-NL	Max	0.	-24.9126	36-1	0.41857
36	0.41857	SLU 6-NL	Max	0.	-24.9126	36-2	0.
36	0.83713	SLU 6-NL	Max	0.	-111.104	36-2	0.41857
36	0.83713	SLU 6-NL	Max	0.	-111.104	36-3	0.
36	1.04642	SLU 6-NL	Max	0.	-163.5596	36-3	0.20928
36	1.2557	SLU 6-NL	Max	0.	-222.522	36-3	0.41857
36	1.2557	SLU 6-NL	Max	0.	-222.522	36-4	0.
36	1.67427	SLU 6-NL	Max	0.	-360.7769	36-4	0.41857
36	1.67427	SLU 6-NL	Max	0.	-360.7769	36-5	0.
36	2.09284	SLU 6-NL	Max	0.	-527.4794	36-5	0.41857
36	0.	SLU 6-NL	Min	0.	37.6624	36-1	0.
36	0.41857	SLU 6-NL	Min	0.	-24.9126	36-1	0.41857
36	0.41857	SLU 6-NL	Min	0.	-24.9126	36-2	0.
36	0.83713	SLU 6-NL	Min	0.	-111.104	36-2	0.41857
36	0.83713	SLU 6-NL	Min	0.	-111.104	36-3	0.
36	1.04642	SLU 6-NL	Min	0.	-163.5596	36-3	0.20928

Table: Element Forces - Frames, Part 2 of 2

Frame	Station	OutputCase	StepType	M2	M3	FrameElem	ElemStation
	m			KN-m	KN-m		m
36	1.2557	SLU 6-NL	Min	0.	-222.522	36-3	0.41857
36	1.2557	SLU 6-NL	Min	0.	-222.522	36-4	0.
36	1.67427	SLU 6-NL	Min	0.	-360.7769	36-4	0.41857
36	1.67427	SLU 6-NL	Min	0.	-360.7769	36-5	0.
36	2.09284	SLU 6-NL	Min	0.	-527.4794	36-5	0.41857
36	0.	SLU 7-NL	Max	0.	22.2406	36-1	0.
36	0.41857	SLU 7-NL	Max	0.	6.7301	36-1	0.41857
36	0.41857	SLU 7-NL	Max	0.	6.7301	36-2	0.
36	0.83713	SLU 7-NL	Max	0.	-24.6736	36-2	0.41857
36	0.83713	SLU 7-NL	Max	0.	-24.6736	36-3	0.
36	1.04642	SLU 7-NL	Max	0.	-46.7313	36-3	0.20928
36	1.2557	SLU 7-NL	Max	0.	-73.2371	36-3	0.41857
36	1.2557	SLU 7-NL	Max	0.	-73.2371	36-4	0.
36	1.67427	SLU 7-NL	Max	0.	-140.2273	36-4	0.41857
36	1.67427	SLU 7-NL	Max	0.	-140.2273	36-5	0.
36	2.09284	SLU 7-NL	Max	0.	-226.9113	36-5	0.41857
36	0.	SLU 7-NL	Min	0.	22.2406	36-1	0.
36	0.41857	SLU 7-NL	Min	0.	6.7301	36-1	0.41857
36	0.41857	SLU 7-NL	Min	0.	6.7301	36-2	0.
36	0.83713	SLU 7-NL	Min	0.	-24.6736	36-2	0.41857
36	0.83713	SLU 7-NL	Min	0.	-24.6736	36-3	0.
36	1.04642	SLU 7-NL	Min	0.	-46.7313	36-3	0.20928
36	1.2557	SLU 7-NL	Min	0.	-73.2371	36-3	0.41857
36	1.2557	SLU 7-NL	Min	0.	-73.2371	36-4	0.
36	1.67427	SLU 7-NL	Min	0.	-140.2273	36-4	0.41857
36	1.67427	SLU 7-NL	Min	0.	-140.2273	36-5	0.
36	2.09284	SLU 7-NL	Min	0.	-226.9113	36-5	0.41857
36	0.	SLE-C-NL	Max	0.	16.7149	36-1	0.
36	0.41857	SLE-C-NL	Max	0.	-29.8464	36-1	0.41857
36	0.41857	SLE-C-NL	Max	0.	-29.8464	36-2	0.
36	0.83713	SLE-C-NL	Max	0.	-94.1205	36-2	0.41857
36	0.83713	SLE-C-NL	Max	0.	-94.1205	36-3	0.
36	1.04642	SLE-C-NL	Max	0.	-133.2872	36-3	0.20928
36	1.2557	SLE-C-NL	Max	0.	-177.3462	36-3	0.41857
36	1.2557	SLE-C-NL	Max	0.	-177.3462	36-4	0.
36	1.67427	SLE-C-NL	Max	0.	-280.7623	36-4	0.41857
36	1.67427	SLE-C-NL	Max	0.	-280.7623	36-5	0.
36	2.09284	SLE-C-NL	Max	0.	-405.6077	36-5	0.41857
36	0.	SLE-C-NL	Min	0.	16.7149	36-1	0.
36	0.41857	SLE-C-NL	Min	0.	-29.8464	36-1	0.41857
36	0.41857	SLE-C-NL	Min	0.	-29.8464	36-2	0.
36	0.83713	SLE-C-NL	Min	0.	-94.1205	36-2	0.41857
36	0.83713	SLE-C-NL	Min	0.	-94.1205	36-3	0.
36	1.04642	SLE-C-NL	Min	0.	-133.2872	36-3	0.20928
36	1.2557	SLE-C-NL	Min	0.	-177.3462	36-3	0.41857
36	1.2557	SLE-C-NL	Min	0.	-177.3462	36-4	0.
36	1.67427	SLE-C-NL	Min	0.	-280.7623	36-4	0.41857
36	1.67427	SLE-C-NL	Min	0.	-280.7623	36-5	0.
36	2.09284	SLE-C-NL	Min	0.	-405.6077	36-5	0.41857
36	0.	SLE-F-1-NL	Max	0.	17.5682	36-1	0.
36	0.41857	SLE-F-1-NL	Max	0.	-31.8747	36-1	0.41857
36	0.41857	SLE-F-1-NL	Max	0.	-31.8747	36-2	0.
36	0.83713	SLE-F-1-NL	Max	0.	-98.1062	36-2	0.41857
36	0.83713	SLE-F-1-NL	Max	0.	-98.1062	36-3	0.

Table: Element Forces - Frames, Part 2 of 2

Frame	Station	OutputCase	StepType	M2	M3	FrameElem	ElemStation
	m			KN-m	KN-m		m
36	1.04642	SLE-F-1-NL	Max	0.	-137.9049	36-3	0.20928
36	1.2557	SLE-F-1-NL	Max	0.	-182.3649	36-3	0.41857
36	1.2557	SLE-F-1-NL	Max	0.	-182.3649	36-4	0.
36	1.67427	SLE-F-1-NL	Max	0.	-285.8898	36-4	0.41857
36	1.67427	SLE-F-1-NL	Max	0.	-285.8898	36-5	0.
36	2.09284	SLE-F-1-NL	Max	0.	-409.9198	36-5	0.41857
36	0.	SLE-F-1-NL	Min	0.	17.5682	36-1	0.
36	0.41857	SLE-F-1-NL	Min	0.	-31.8747	36-1	0.41857
36	0.41857	SLE-F-1-NL	Min	0.	-31.8747	36-2	0.
36	0.83713	SLE-F-1-NL	Min	0.	-98.1062	36-2	0.41857
36	0.83713	SLE-F-1-NL	Min	0.	-98.1062	36-3	0.
36	1.04642	SLE-F-1-NL	Min	0.	-137.9049	36-3	0.20928
36	1.2557	SLE-F-1-NL	Min	0.	-182.3649	36-3	0.41857
36	1.2557	SLE-F-1-NL	Min	0.	-182.3649	36-4	0.
36	1.67427	SLE-F-1-NL	Min	0.	-285.8898	36-4	0.41857
36	1.67427	SLE-F-1-NL	Min	0.	-285.8898	36-5	0.
36	2.09284	SLE-F-1-NL	Min	0.	-409.9198	36-5	0.41857
36	0.	SLE-F-2-NL	Max	0.	8.0476	36-1	0.
36	0.41857	SLE-F-2-NL	Max	0.	-25.6597	36-1	0.41857
36	0.41857	SLE-F-2-NL	Max	0.	-25.6597	36-2	0.
36	0.83713	SLE-F-2-NL	Max	0.	-74.143	36-2	0.41857
36	0.83713	SLE-F-2-NL	Max	0.	-74.143	36-3	0.
36	1.04642	SLE-F-2-NL	Max	0.	-104.3127	36-3	0.20928
36	1.2557	SLE-F-2-NL	Max	0.	-138.641	36-3	0.41857
36	1.2557	SLE-F-2-NL	Max	0.	-138.641	36-4	0.
36	1.67427	SLE-F-2-NL	Max	0.	-220.3928	36-4	0.41857
36	1.67427	SLE-F-2-NL	Max	0.	-220.3928	36-5	0.
36	2.09284	SLE-F-2-NL	Max	0.	-320.6374	36-5	0.41857
36	0.	SLE-F-2-NL	Min	0.	8.0476	36-1	0.
36	0.41857	SLE-F-2-NL	Min	0.	-25.6597	36-1	0.41857
36	0.41857	SLE-F-2-NL	Min	0.	-25.6597	36-2	0.
36	0.83713	SLE-F-2-NL	Min	0.	-74.143	36-2	0.41857
36	0.83713	SLE-F-2-NL	Min	0.	-74.143	36-3	0.
36	1.04642	SLE-F-2-NL	Min	0.	-104.3127	36-3	0.20928
36	1.2557	SLE-F-2-NL	Min	0.	-138.641	36-3	0.41857
36	1.2557	SLE-F-2-NL	Min	0.	-138.641	36-4	0.
36	1.67427	SLE-F-2-NL	Min	0.	-220.3928	36-4	0.41857
36	1.67427	SLE-F-2-NL	Min	0.	-220.3928	36-5	0.
36	2.09284	SLE-F-2-NL	Min	0.	-320.6374	36-5	0.41857
36	0.	SLE-F-3-NL	Max	0.	20.0165	36-1	0.
36	0.41857	SLE-F-3-NL	Max	0.	-12.64	36-1	0.41857
36	0.41857	SLE-F-3-NL	Max	0.	-12.64	36-2	0.
36	0.83713	SLE-F-3-NL	Max	0.	-60.4109	36-2	0.41857
36	0.83713	SLE-F-3-NL	Max	0.	-60.4109	36-3	0.
36	1.04642	SLE-F-3-NL	Max	0.	-90.3518	36-3	0.20928
36	1.2557	SLE-F-3-NL	Max	0.	-124.5354	36-3	0.41857
36	1.2557	SLE-F-3-NL	Max	0.	-124.5354	36-4	0.
36	1.67427	SLE-F-3-NL	Max	0.	-206.2526	36-4	0.41857
36	1.67427	SLE-F-3-NL	Max	0.	-206.2526	36-5	0.
36	2.09284	SLE-F-3-NL	Max	0.	-306.8015	36-5	0.41857
36	0.	SLE-F-3-NL	Min	0.	20.0165	36-1	0.
36	0.41857	SLE-F-3-NL	Min	0.	-12.64	36-1	0.41857
36	0.41857	SLE-F-3-NL	Min	0.	-12.64	36-2	0.
36	0.83713	SLE-F-3-NL	Min	0.	-60.4109	36-2	0.41857

Table: Element Forces - Frames, Part 2 of 2

Frame	Station	OutputCase	StepType	M2	M3	FrameElem	ElemStation
	m			KN-m	KN-m		m
36	0.83713	SLE-F-3-NL	Min	0.	-60.4109	36-3	0.
36	1.04642	SLE-F-3-NL	Min	0.	-90.3518	36-3	0.20928
36	1.2557	SLE-F-3-NL	Min	0.	-124.5354	36-3	0.41857
36	1.2557	SLE-F-3-NL	Min	0.	-124.5354	36-4	0.
36	1.67427	SLE-F-3-NL	Min	0.	-206.2526	36-4	0.41857
36	1.67427	SLE-F-3-NL	Min	0.	-206.2526	36-5	0.
36	2.09284	SLE-F-3-NL	Min	0.	-306.8015	36-5	0.41857
36	0.	SLE-QP-NL	Max	0.	15.4434	36-1	0.
36	0.41857	SLE-QP-NL	Max	0.	-21.6057	36-1	0.41857
36	0.41857	SLE-QP-NL	Max	0.	-21.6057	36-2	0.
36	0.83713	SLE-QP-NL	Max	0.	-73.4315	36-2	0.41857
36	0.83713	SLE-QP-NL	Max	0.	-73.4315	36-3	0.
36	1.04642	SLE-QP-NL	Max	0.	-105.273	36-3	0.20928
36	1.2557	SLE-QP-NL	Max	0.	-141.273	36-3	0.41857
36	1.2557	SLE-QP-NL	Max	0.	-141.273	36-4	0.
36	1.67427	SLE-QP-NL	Max	0.	-226.3691	36-4	0.41857
36	1.67427	SLE-QP-NL	Max	0.	-226.3691	36-5	0.
36	2.09284	SLE-QP-NL	Max	0.	-329.959	36-5	0.41857
36	0.	SLE-QP-NL	Min	0.	15.4434	36-1	0.
36	0.41857	SLE-QP-NL	Min	0.	-21.6057	36-1	0.41857
36	0.41857	SLE-QP-NL	Min	0.	-21.6057	36-2	0.
36	0.83713	SLE-QP-NL	Min	0.	-73.4315	36-2	0.41857
36	0.83713	SLE-QP-NL	Min	0.	-73.4315	36-3	0.
36	1.04642	SLE-QP-NL	Min	0.	-105.273	36-3	0.20928
36	1.2557	SLE-QP-NL	Min	0.	-141.273	36-3	0.41857
36	1.2557	SLE-QP-NL	Min	0.	-141.273	36-4	0.
36	1.67427	SLE-QP-NL	Min	0.	-226.3691	36-4	0.41857
36	1.67427	SLE-QP-NL	Min	0.	-226.3691	36-5	0.
36	2.09284	SLE-QP-NL	Min	0.	-329.959	36-5	0.41857
36	0.	SLV1-NL	Max	0.	-16.4625	36-1	0.
36	0.41857	SLV1-NL	Max	0.	-40.6123	36-1	0.41857
36	0.41857	SLV1-NL	Max	0.	-40.6123	36-2	0.
36	0.83713	SLV1-NL	Max	0.	-79.8454	36-2	0.41857
36	0.83713	SLV1-NL	Max	0.	-79.8454	36-3	0.
36	1.04642	SLV1-NL	Max	0.	-105.497	36-3	0.20928
36	1.2557	SLV1-NL	Max	0.	-135.3743	36-3	0.41857
36	1.2557	SLV1-NL	Max	0.	-135.3743	36-4	0.
36	1.67427	SLV1-NL	Max	0.	-208.4115	36-4	0.41857
36	1.67427	SLV1-NL	Max	0.	-208.4115	36-5	0.
36	2.09284	SLV1-NL	Max	0.	-300.1692	36-5	0.41857
36	0.	SLV1-NL	Min	0.	-16.4625	36-1	0.
36	0.41857	SLV1-NL	Min	0.	-40.6123	36-1	0.41857
36	0.41857	SLV1-NL	Min	0.	-40.6123	36-2	0.
36	0.83713	SLV1-NL	Min	0.	-79.8454	36-2	0.41857
36	0.83713	SLV1-NL	Min	0.	-79.8454	36-3	0.
36	1.04642	SLV1-NL	Min	0.	-105.497	36-3	0.20928
36	1.2557	SLV1-NL	Min	0.	-135.3743	36-3	0.41857
36	1.2557	SLV1-NL	Min	0.	-135.3743	36-4	0.
36	1.67427	SLV1-NL	Min	0.	-208.4115	36-4	0.41857
36	1.67427	SLV1-NL	Min	0.	-208.4115	36-5	0.
36	2.09284	SLV1-NL	Min	0.	-300.1692	36-5	0.41857
36	0.	SLV2-NL	Max	0.	34.755	36-1	0.
36	0.41857	SLV2-NL	Max	0.	0.4549	36-1	0.41857
36	0.41857	SLV2-NL	Max	0.	0.4549	36-2	0.

Table: Element Forces - Frames, Part 2 of 2

Frame	Station	OutputCase	StepType	M2	M3	FrameElem	ElemStation
	m			KN-m	KN-m		m
36	0.83713	SLV2-NL	Max	0.	-49.3506	36-2	0.41857
36	0.83713	SLV2-NL	Max	0.	-49.3506	36-3	0.
36	1.04642	SLV2-NL	Max	0.	-80.4688	36-3	0.20928
36	1.2557	SLV2-NL	Max	0.	-115.9436	36-3	0.41857
36	1.2557	SLV2-NL	Max	0.	-115.9436	36-4	0.
36	1.67427	SLV2-NL	Max	0.	-200.6064	36-4	0.41857
36	1.67427	SLV2-NL	Max	0.	-200.6064	36-5	0.
36	2.09284	SLV2-NL	Max	0.	-304.6215	36-5	0.41857
36	0.	SLV2-NL	Min	0.	34.755	36-1	0.
36	0.41857	SLV2-NL	Min	0.	0.4549	36-1	0.41857
36	0.41857	SLV2-NL	Min	0.	0.4549	36-2	0.
36	0.83713	SLV2-NL	Min	0.	-49.3506	36-2	0.41857
36	0.83713	SLV2-NL	Min	0.	-49.3506	36-3	0.
36	1.04642	SLV2-NL	Min	0.	-80.4688	36-3	0.20928
36	1.2557	SLV2-NL	Min	0.	-115.9436	36-3	0.41857
36	1.2557	SLV2-NL	Min	0.	-115.9436	36-4	0.
36	1.67427	SLV2-NL	Min	0.	-200.6064	36-4	0.41857
36	1.67427	SLV2-NL	Min	0.	-200.6064	36-5	0.
36	2.09284	SLV2-NL	Min	0.	-304.6215	36-5	0.41857
36	0.	SLV3-NL	Max	0.	-16.76	36-1	0.
36	0.41857	SLV3-NL	Max	0.	-41.7275	36-1	0.41857
36	0.41857	SLV3-NL	Max	0.	-41.7275	36-2	0.
36	0.83713	SLV3-NL	Max	0.	-81.9167	36-2	0.41857
36	0.83713	SLV3-NL	Max	0.	-81.9167	36-3	0.
36	1.04642	SLV3-NL	Max	0.	-108.0931	36-3	0.20928
36	1.2557	SLV3-NL	Max	0.	-138.5234	36-3	0.41857
36	1.2557	SLV3-NL	Max	0.	-138.5234	36-4	0.
36	1.67427	SLV3-NL	Max	0.	-212.7433	36-4	0.41857
36	1.67427	SLV3-NL	Max	0.	-212.7433	36-5	0.
36	2.09284	SLV3-NL	Max	0.	-305.7722	36-5	0.41857
36	0.	SLV3-NL	Min	0.	-16.76	36-1	0.
36	0.41857	SLV3-NL	Min	0.	-41.7275	36-1	0.41857
36	0.41857	SLV3-NL	Min	0.	-41.7275	36-2	0.
36	0.83713	SLV3-NL	Min	0.	-81.9167	36-2	0.41857
36	0.83713	SLV3-NL	Min	0.	-81.9167	36-3	0.
36	1.04642	SLV3-NL	Min	0.	-108.0931	36-3	0.20928
36	1.2557	SLV3-NL	Min	0.	-138.5234	36-3	0.41857
36	1.2557	SLV3-NL	Min	0.	-138.5234	36-4	0.
36	1.67427	SLV3-NL	Min	0.	-212.7433	36-4	0.41857
36	1.67427	SLV3-NL	Min	0.	-212.7433	36-5	0.
36	2.09284	SLV3-NL	Min	0.	-305.7722	36-5	0.41857
36	0.	SLV4-NL	Max	0.	34.4482	36-1	0.
36	0.41857	SLV4-NL	Max	0.	-0.6713	36-1	0.41857
36	0.41857	SLV4-NL	Max	0.	-0.6713	36-2	0.
36	0.83713	SLV4-NL	Max	0.	-51.4346	36-2	0.41857
36	0.83713	SLV4-NL	Max	0.	-51.4346	36-3	0.
36	1.04642	SLV4-NL	Max	0.	-83.0784	36-3	0.20928
36	1.2557	SLV4-NL	Max	0.	-119.1072	36-3	0.41857
36	1.2557	SLV4-NL	Max	0.	-119.1072	36-4	0.
36	1.67427	SLV4-NL	Max	0.	-204.9546	36-4	0.41857
36	1.67427	SLV4-NL	Max	0.	-204.9546	36-5	0.
36	2.09284	SLV4-NL	Max	0.	-310.2426	36-5	0.41857
36	0.	SLV4-NL	Min	0.	34.4482	36-1	0.
36	0.41857	SLV4-NL	Min	0.	-0.6713	36-1	0.41857

Table: Element Forces - Frames, Part 2 of 2

Frame	Station	OutputCase	StepType	M2	M3	FrameElem	ElemStation
	m			KN-m	KN-m		m
36	0.41857	SLV4-NL	Min	0.	-0.6713	36-2	0.
36	0.83713	SLV4-NL	Min	0.	-51.4346	36-2	0.41857
36	0.83713	SLV4-NL	Min	0.	-51.4346	36-3	0.
36	1.04642	SLV4-NL	Min	0.	-83.0784	36-3	0.20928
36	1.2557	SLV4-NL	Min	0.	-119.1072	36-3	0.41857
36	1.2557	SLV4-NL	Min	0.	-119.1072	36-4	0.
36	1.67427	SLV4-NL	Min	0.	-204.9546	36-4	0.41857
36	1.67427	SLV4-NL	Min	0.	-204.9546	36-5	0.
36	2.09284	SLV4-NL	Min	0.	-310.2426	36-5	0.41857
36	0.	SLV5-NL	Max	0.	7.3589	36-1	0.
36	0.41857	SLV5-NL	Max	0.	-26.6668	36-1	0.41857
36	0.41857	SLV5-NL	Max	0.	-26.6668	36-2	0.
36	0.83713	SLV5-NL	Max	0.	-75.7624	36-2	0.41857
36	0.83713	SLV5-NL	Max	0.	-75.7624	36-3	0.
36	1.04642	SLV5-NL	Max	0.	-106.3541	36-3	0.20928
36	1.2557	SLV5-NL	Max	0.	-141.1842	36-3	0.41857
36	1.2557	SLV5-NL	Max	0.	-141.1842	36-4	0.
36	1.67427	SLV5-NL	Max	0.	-224.1885	36-4	0.41857
36	1.67427	SLV5-NL	Max	0.	-224.1885	36-5	0.
36	2.09284	SLV5-NL	Max	0.	-326.0318	36-5	0.41857
36	0.	SLV5-NL	Min	0.	7.3589	36-1	0.
36	0.41857	SLV5-NL	Min	0.	-26.6668	36-1	0.41857
36	0.41857	SLV5-NL	Min	0.	-26.6668	36-2	0.
36	0.83713	SLV5-NL	Min	0.	-75.7624	36-2	0.41857
36	0.83713	SLV5-NL	Min	0.	-75.7624	36-3	0.
36	1.04642	SLV5-NL	Min	0.	-106.3541	36-3	0.20928
36	1.2557	SLV5-NL	Min	0.	-141.1842	36-3	0.41857
36	1.2557	SLV5-NL	Min	0.	-141.1842	36-4	0.
36	1.67427	SLV5-NL	Min	0.	-224.1885	36-4	0.41857
36	1.67427	SLV5-NL	Min	0.	-224.1885	36-5	0.
36	2.09284	SLV5-NL	Min	0.	-326.0318	36-5	0.41857
36	0.	SLV6-NL	Max	0.	22.2694	36-1	0.
36	0.41857	SLV6-NL	Max	0.	-14.8737	36-1	0.41857
36	0.41857	SLV6-NL	Max	0.	-14.8737	36-2	0.
36	0.83713	SLV6-NL	Max	0.	-67.2133	36-2	0.41857
36	0.83713	SLV6-NL	Max	0.	-67.2133	36-3	0.
36	1.04642	SLV6-NL	Max	0.	-99.4811	36-3	0.20928
36	1.2557	SLV6-NL	Max	0.	-136.0266	36-3	0.41857
36	1.2557	SLV6-NL	Max	0.	-136.0266	36-4	0.
36	1.67427	SLV6-NL	Max	0.	-222.5909	36-4	0.41857
36	1.67427	SLV6-NL	Max	0.	-222.5909	36-5	0.
36	2.09284	SLV6-NL	Max	0.	-328.1835	36-5	0.41857
36	0.	SLV6-NL	Min	0.	22.2694	36-1	0.
36	0.41857	SLV6-NL	Min	0.	-14.8737	36-1	0.41857
36	0.41857	SLV6-NL	Min	0.	-14.8737	36-2	0.
36	0.83713	SLV6-NL	Min	0.	-67.2133	36-2	0.41857
36	0.83713	SLV6-NL	Min	0.	-67.2133	36-3	0.
36	1.04642	SLV6-NL	Min	0.	-99.4811	36-3	0.20928
36	1.2557	SLV6-NL	Min	0.	-136.0266	36-3	0.41857
36	1.2557	SLV6-NL	Min	0.	-136.0266	36-4	0.
36	1.67427	SLV6-NL	Min	0.	-222.5909	36-4	0.41857
36	1.67427	SLV6-NL	Min	0.	-222.5909	36-5	0.
36	2.09284	SLV6-NL	Min	0.	-328.1835	36-5	0.41857
36	0.	SLV7-NL	Max	0.	6.3742	36-1	0.

Table: Element Forces - Frames, Part 2 of 2

Frame	Station	OutputCase	StepType	M2	M3	FrameElem	ElemStation
	m			KN-m	KN-m		m
36	0.41857	SLV7-NL	Max	0.	-30.3759	36-1	0.41857
36	0.41857	SLV7-NL	Max	0.	-30.3759	36-2	0.
36	0.83713	SLV7-NL	Max	0.	-82.6573	36-2	0.41857
36	0.83713	SLV7-NL	Max	0.	-82.6573	36-3	0.
36	1.04642	SLV7-NL	Max	0.	-114.9975	36-3	0.20928
36	1.2557	SLV7-NL	Max	0.	-151.6705	36-3	0.41857
36	1.2557	SLV7-NL	Max	0.	-151.6705	36-4	0.
36	1.67427	SLV7-NL	Max	0.	-238.6163	36-4	0.41857
36	1.67427	SLV7-NL	Max	0.	-238.6163	36-5	0.
36	2.09284	SLV7-NL	Max	0.	-344.6955	36-5	0.41857
36	0.	SLV7-NL	Min	0.	6.3742	36-1	0.
36	0.41857	SLV7-NL	Min	0.	-30.3759	36-1	0.41857
36	0.41857	SLV7-NL	Min	0.	-30.3759	36-2	0.
36	0.83713	SLV7-NL	Min	0.	-82.6573	36-2	0.41857
36	0.83713	SLV7-NL	Min	0.	-82.6573	36-3	0.
36	1.04642	SLV7-NL	Min	0.	-114.9975	36-3	0.20928
36	1.2557	SLV7-NL	Min	0.	-151.6705	36-3	0.41857
36	1.2557	SLV7-NL	Min	0.	-151.6705	36-4	0.
36	1.67427	SLV7-NL	Min	0.	-238.6163	36-4	0.41857
36	1.67427	SLV7-NL	Min	0.	-238.6163	36-5	0.
36	2.09284	SLV7-NL	Min	0.	-344.6955	36-5	0.41857
36	0.	SLV8-NL	Max	0.	21.2407	36-1	0.
36	0.41857	SLV8-NL	Max	0.	-18.6342	36-1	0.41857
36	0.41857	SLV8-NL	Max	0.	-18.6342	36-2	0.
36	0.83713	SLV8-NL	Max	0.	-74.167	36-2	0.41857
36	0.83713	SLV8-NL	Max	0.	-74.167	36-3	0.
36	1.04642	SLV8-NL	Max	0.	-108.1869	36-3	0.20928
36	1.2557	SLV8-NL	Max	0.	-146.579	36-3	0.41857
36	1.2557	SLV8-NL	Max	0.	-146.579	36-4	0.
36	1.67427	SLV8-NL	Max	0.	-237.0922	36-4	0.41857
36	1.67427	SLV8-NL	Max	0.	-237.0922	36-5	0.
36	2.09284	SLV8-NL	Max	0.	-346.9282	36-5	0.41857
36	0.	SLV8-NL	Min	0.	21.2407	36-1	0.
36	0.41857	SLV8-NL	Min	0.	-18.6342	36-1	0.41857
36	0.41857	SLV8-NL	Min	0.	-18.6342	36-2	0.
36	0.83713	SLV8-NL	Min	0.	-74.167	36-2	0.41857
36	0.83713	SLV8-NL	Min	0.	-74.167	36-3	0.
36	1.04642	SLV8-NL	Min	0.	-108.1869	36-3	0.20928
36	1.2557	SLV8-NL	Min	0.	-146.579	36-3	0.41857
36	1.2557	SLV8-NL	Min	0.	-146.579	36-4	0.
36	1.67427	SLV8-NL	Min	0.	-237.0922	36-4	0.41857
36	1.67427	SLV8-NL	Min	0.	-237.0922	36-5	0.
36	2.09284	SLV8-NL	Min	0.	-346.9282	36-5	0.41857
36	0.	SLV9-NL	Max	0.	4.0122	36-1	0.
36	0.41857	SLV9-NL	Max	0.	-25.0274	36-1	0.41857
36	0.41857	SLV9-NL	Max	0.	-25.0274	36-2	0.
36	0.83713	SLV9-NL	Max	0.	-69.4696	36-2	0.41857
36	0.83713	SLV9-NL	Max	0.	-69.4696	36-3	0.
36	1.04642	SLV9-NL	Max	0.	-97.8622	36-3	0.20928
36	1.2557	SLV9-NL	Max	0.	-130.5799	36-3	0.41857
36	1.2557	SLV9-NL	Max	0.	-130.5799	36-4	0.
36	1.67427	SLV9-NL	Max	0.	-209.6236	36-4	0.41857
36	1.67427	SLV9-NL	Max	0.	-209.6236	36-5	0.
36	2.09284	SLV9-NL	Max	0.	-307.8663	36-5	0.41857

Table: Element Forces - Frames, Part 2 of 2

Frame	Station	OutputCase	StepType	M2	M3	FrameElem	ElemStation
	m			KN-m	KN-m		m
36	0.	SLV9-NL	Min	0.	4.0122	36-1	0.
36	0.41857	SLV9-NL	Min	0.	-25.0274	36-1	0.41857
36	0.41857	SLV9-NL	Min	0.	-25.0274	36-2	0.
36	0.83713	SLV9-NL	Min	0.	-69.4696	36-2	0.41857
36	0.83713	SLV9-NL	Min	0.	-69.4696	36-3	0.
36	1.04642	SLV9-NL	Min	0.	-97.8622	36-3	0.20928
36	1.2557	SLV9-NL	Min	0.	-130.5799	36-3	0.41857
36	1.2557	SLV9-NL	Min	0.	-130.5799	36-4	0.
36	1.67427	SLV9-NL	Min	0.	-209.6236	36-4	0.41857
36	1.67427	SLV9-NL	Min	0.	-209.6236	36-5	0.
36	2.09284	SLV9-NL	Min	0.	-307.8663	36-5	0.41857
36	0.	SLV10-NL	Max	0.	22.9662	36-1	0.
36	0.41857	SLV10-NL	Max	0.	-18.2863	36-1	0.41857
36	0.41857	SLV10-NL	Max	0.	-18.2863	36-2	0.
36	0.83713	SLV10-NL	Max	0.	-74.5256	36-2	0.41857
36	0.83713	SLV10-NL	Max	0.	-74.5256	36-3	0.
36	1.04642	SLV10-NL	Max	0.	-108.6393	36-3	0.20928
36	1.2557	SLV10-NL	Max	0.	-146.9476	36-3	0.41857
36	1.2557	SLV10-NL	Max	0.	-146.9476	36-4	0.
36	1.67427	SLV10-NL	Max	0.	-236.7482	36-4	0.41857
36	1.67427	SLV10-NL	Max	0.	-236.7482	36-5	0.
36	2.09284	SLV10-NL	Max	0.	-345.1234	36-5	0.41857
36	0.	SLV10-NL	Min	0.	22.9662	36-1	0.
36	0.41857	SLV10-NL	Min	0.	-18.2863	36-1	0.41857
36	0.41857	SLV10-NL	Min	0.	-18.2863	36-2	0.
36	0.83713	SLV10-NL	Min	0.	-74.5256	36-2	0.41857
36	0.83713	SLV10-NL	Min	0.	-74.5256	36-3	0.
36	1.04642	SLV10-NL	Min	0.	-108.6393	36-3	0.20928
36	1.2557	SLV10-NL	Min	0.	-146.9476	36-3	0.41857
36	1.2557	SLV10-NL	Min	0.	-146.9476	36-4	0.
36	1.67427	SLV10-NL	Min	0.	-236.7482	36-4	0.41857
36	1.67427	SLV10-NL	Min	0.	-236.7482	36-5	0.
36	2.09284	SLV10-NL	Min	0.	-345.1234	36-5	0.41857
36	0.	SLV11-NL	Max	0.	4.9093	36-1	0.
36	0.41857	SLV11-NL	Max	0.	-26.3314	36-1	0.41857
36	0.41857	SLV11-NL	Max	0.	-26.3314	36-2	0.
36	0.83713	SLV11-NL	Max	0.	-73.313	36-2	0.41857
36	0.83713	SLV11-NL	Max	0.	-73.313	36-3	0.
36	1.04642	SLV11-NL	Max	0.	-103.1072	36-3	0.20928
36	1.2557	SLV11-NL	Max	0.	-137.3176	36-3	0.41857
36	1.2557	SLV11-NL	Max	0.	-137.3176	36-4	0.
36	1.67427	SLV11-NL	Max	0.	-219.6273	36-4	0.41857
36	1.67427	SLV11-NL	Max	0.	-219.6273	36-5	0.
36	2.09284	SLV11-NL	Max	0.	-321.5242	36-5	0.41857
36	0.	SLV11-NL	Min	0.	4.9093	36-1	0.
36	0.41857	SLV11-NL	Min	0.	-26.3314	36-1	0.41857
36	0.41857	SLV11-NL	Min	0.	-26.3314	36-2	0.
36	0.83713	SLV11-NL	Min	0.	-73.313	36-2	0.41857
36	0.83713	SLV11-NL	Min	0.	-73.313	36-3	0.
36	1.04642	SLV11-NL	Min	0.	-103.1072	36-3	0.20928
36	1.2557	SLV11-NL	Min	0.	-137.3176	36-3	0.41857
36	1.2557	SLV11-NL	Min	0.	-137.3176	36-4	0.
36	1.67427	SLV11-NL	Min	0.	-219.6273	36-4	0.41857
36	1.67427	SLV11-NL	Min	0.	-219.6273	36-5	0.

Table: Element Forces - Frames, Part 2 of 2

Frame	Station	OutputCase	StepType	M2	M3	FrameElem	ElemStation
	m			KN-m	KN-m		m
36	2.09284	SLV11-NL	Min	0.	-321.5242	36-5	0.41857
36	0.	SLV12-NL	Max	0.	23.8148	36-1	0.
36	0.41857	SLV12-NL	Max	0.	-19.6467	36-1	0.41857
36	0.41857	SLV12-NL	Max	0.	-19.6467	36-2	0.
36	0.83713	SLV12-NL	Max	0.	-78.4335	36-2	0.41857
36	0.83713	SLV12-NL	Max	0.	-78.4335	36-3	0.
36	1.04642	SLV12-NL	Max	0.	-113.9531	36-3	0.20928
36	1.2557	SLV12-NL	Max	0.	-153.758	36-3	0.41857
36	1.2557	SLV12-NL	Max	0.	-153.758	36-4	0.
36	1.67427	SLV12-NL	Max	0.	-246.8329	36-4	0.41857
36	1.67427	SLV12-NL	Max	0.	-246.8329	36-5	0.
36	2.09284	SLV12-NL	Max	0.	-358.8708	36-5	0.41857
36	0.	SLV12-NL	Min	0.	23.8148	36-1	0.
36	0.41857	SLV12-NL	Min	0.	-19.6467	36-1	0.41857
36	0.41857	SLV12-NL	Min	0.	-19.6467	36-2	0.
36	0.83713	SLV12-NL	Min	0.	-78.4335	36-2	0.41857
36	0.83713	SLV12-NL	Min	0.	-78.4335	36-3	0.
36	1.04642	SLV12-NL	Min	0.	-113.9531	36-3	0.20928
36	1.2557	SLV12-NL	Min	0.	-153.758	36-3	0.41857
36	1.2557	SLV12-NL	Min	0.	-153.758	36-4	0.
36	1.67427	SLV12-NL	Min	0.	-246.8329	36-4	0.41857
36	1.67427	SLV12-NL	Min	0.	-246.8329	36-5	0.
36	2.09284	SLV12-NL	Min	0.	-358.8708	36-5	0.41857
36	0.	SLV13-NL	Max	0.	11.697	36-1	0.
36	0.41857	SLV13-NL	Max	0.	-21.6947	36-1	0.41857
36	0.41857	SLV13-NL	Max	0.	-21.6947	36-2	0.
36	0.83713	SLV13-NL	Max	0.	-69.9488	36-2	0.41857
36	0.83713	SLV13-NL	Max	0.	-69.9488	36-3	0.
36	1.04642	SLV13-NL	Max	0.	-100.031	36-3	0.20928
36	1.2557	SLV13-NL	Max	0.	-134.2868	36-3	0.41857
36	1.2557	SLV13-NL	Max	0.	-134.2868	36-4	0.
36	1.67427	SLV13-NL	Max	0.	-215.9304	36-4	0.41857
36	1.67427	SLV13-NL	Max	0.	-215.9304	36-5	0.
36	2.09284	SLV13-NL	Max	0.	-316.1014	36-5	0.41857
36	0.	SLV13-NL	Min	0.	11.697	36-1	0.
36	0.41857	SLV13-NL	Min	0.	-21.6947	36-1	0.41857
36	0.41857	SLV13-NL	Min	0.	-21.6947	36-2	0.
36	0.83713	SLV13-NL	Min	0.	-69.9488	36-2	0.41857
36	0.83713	SLV13-NL	Min	0.	-69.9488	36-3	0.
36	1.04642	SLV13-NL	Min	0.	-100.031	36-3	0.20928
36	1.2557	SLV13-NL	Min	0.	-134.2868	36-3	0.41857
36	1.2557	SLV13-NL	Min	0.	-134.2868	36-4	0.
36	1.67427	SLV13-NL	Min	0.	-215.9304	36-4	0.41857
36	1.67427	SLV13-NL	Min	0.	-215.9304	36-5	0.
36	2.09284	SLV13-NL	Min	0.	-316.1014	36-5	0.41857
36	0.	SLV14-NL	Max	0.	16.8451	36-1	0.
36	0.41857	SLV14-NL	Max	0.	-20.222	36-1	0.41857
36	0.41857	SLV14-NL	Max	0.	-20.222	36-2	0.
36	0.83713	SLV14-NL	Max	0.	-72.0266	36-2	0.41857
36	0.83713	SLV14-NL	Max	0.	-72.0266	36-3	0.
36	1.04642	SLV14-NL	Max	0.	-103.8309	36-3	0.20928
36	1.2557	SLV14-NL	Max	0.	-139.7695	36-3	0.41857
36	1.2557	SLV14-NL	Max	0.	-139.7695	36-4	0.
36	1.67427	SLV14-NL	Max	0.	-224.6514	36-4	0.41857

Table: Element Forces - Frames, Part 2 of 2

Frame	Station	OutputCase	StepType	M2	M3	FrameElem	ElemStation
	m			KN-m	KN-m		m
36	1.67427	SLV14-NL	Max	0.	-224.6514	36-5	0.
36	2.09284	SLV14-NL	Max	0.	-327.8734	36-5	0.41857
36	0.	SLV14-NL	Min	0.	16.8451	36-1	0.
36	0.41857	SLV14-NL	Min	0.	-20.222	36-1	0.41857
36	0.41857	SLV14-NL	Min	0.	-20.222	36-2	0.
36	0.83713	SLV14-NL	Min	0.	-72.0266	36-2	0.41857
36	0.83713	SLV14-NL	Min	0.	-72.0266	36-3	0.
36	1.04642	SLV14-NL	Min	0.	-103.8309	36-3	0.20928
36	1.2557	SLV14-NL	Min	0.	-139.7695	36-3	0.41857
36	1.2557	SLV14-NL	Min	0.	-139.7695	36-4	0.
36	1.67427	SLV14-NL	Min	0.	-224.6514	36-4	0.41857
36	1.67427	SLV14-NL	Min	0.	-224.6514	36-5	0.
36	2.09284	SLV14-NL	Min	0.	-327.8734	36-5	0.41857
36	0.	SLV15-NL	Max	0.	14.6277	36-1	0.
36	0.41857	SLV15-NL	Max	0.	-25.9605	36-1	0.41857
36	0.41857	SLV15-NL	Max	0.	-25.9605	36-2	0.
36	0.83713	SLV15-NL	Max	0.	-82.5391	36-2	0.41857
36	0.83713	SLV15-NL	Max	0.	-82.5391	36-3	0.
36	1.04642	SLV15-NL	Max	0.	-117.224	36-3	0.20928
36	1.2557	SLV15-NL	Max	0.	-156.3851	36-3	0.41857
36	1.2557	SLV15-NL	Max	0.	-156.3851	36-4	0.
36	1.67427	SLV15-NL	Max	0.	-248.7756	36-4	0.41857
36	1.67427	SLV15-NL	Max	0.	-248.7756	36-5	0.
36	2.09284	SLV15-NL	Max	0.	-360.9879	36-5	0.41857
36	0.	SLV15-NL	Min	0.	14.6277	36-1	0.
36	0.41857	SLV15-NL	Min	0.	-25.9605	36-1	0.41857
36	0.41857	SLV15-NL	Min	0.	-25.9605	36-2	0.
36	0.83713	SLV15-NL	Min	0.	-82.5391	36-2	0.41857
36	0.83713	SLV15-NL	Min	0.	-82.5391	36-3	0.
36	1.04642	SLV15-NL	Min	0.	-117.224	36-3	0.20928
36	1.2557	SLV15-NL	Min	0.	-156.3851	36-3	0.41857
36	1.2557	SLV15-NL	Min	0.	-156.3851	36-4	0.
36	1.67427	SLV15-NL	Min	0.	-248.7756	36-4	0.41857
36	1.67427	SLV15-NL	Min	0.	-248.7756	36-5	0.
36	2.09284	SLV15-NL	Min	0.	-360.9879	36-5	0.41857
36	0.	SLV16-NL	Max	0.	19.4234	36-1	0.
36	0.41857	SLV16-NL	Max	0.	-24.8456	36-1	0.41857
36	0.41857	SLV16-NL	Max	0.	-24.8456	36-2	0.
36	0.83713	SLV16-NL	Max	0.	-84.9801	36-2	0.41857
36	0.83713	SLV16-NL	Max	0.	-84.9801	36-3	0.
36	1.04642	SLV16-NL	Max	0.	-121.3897	36-3	0.20928
36	1.2557	SLV16-NL	Max	0.	-162.2364	36-3	0.41857
36	1.2557	SLV16-NL	Max	0.	-162.2364	36-4	0.
36	1.67427	SLV16-NL	Max	0.	-257.8708	36-4	0.41857
36	1.67427	SLV16-NL	Max	0.	-257.8708	36-5	0.
36	2.09284	SLV16-NL	Max	0.	-373.1397	36-5	0.41857
36	0.	SLV16-NL	Min	0.	19.4234	36-1	0.
36	0.41857	SLV16-NL	Min	0.	-24.8456	36-1	0.41857
36	0.41857	SLV16-NL	Min	0.	-24.8456	36-2	0.
36	0.83713	SLV16-NL	Min	0.	-84.9801	36-2	0.41857
36	0.83713	SLV16-NL	Min	0.	-84.9801	36-3	0.
36	1.04642	SLV16-NL	Min	0.	-121.3897	36-3	0.20928
36	1.2557	SLV16-NL	Min	0.	-162.2364	36-3	0.41857
36	1.2557	SLV16-NL	Min	0.	-162.2364	36-4	0.

Table: Element Forces - Frames, Part 2 of 2

Frame	Station	OutputCase	StepType	M2	M3	FrameElem	ElemStation
	m			KN-m	KN-m		m
36	1.67427	SLV16-NL	Min	0.	-257.8708	36-4	0.41857
36	1.67427	SLV16-NL	Min	0.	-257.8708	36-5	0.
36	2.09284	SLV16-NL	Min	0.	-373.1397	36-5	0.41857
41	0.	SLU 1-NL	Max	0.	-984.2045	41-1	0.
41	0.43006	SLU 1-NL	Max	0.	-820.3792	41-1	0.43006
41	0.43006	SLU 1-NL	Max	0.	-820.3647	41-2	0.
41	0.86012	SLU 1-NL	Max	0.	-680.444	41-2	0.43006
41	0.86012	SLU 1-NL	Max	0.	-680.4231	41-3	0.
41	1.29018	SLU 1-NL	Max	0.	-563.6811	41-3	0.43006
41	1.29018	SLU 1-NL	Max	0.	-563.6548	41-4	0.
41	1.50521	SLU 1-NL	Max	0.	-513.8164	41-4	0.21503
41	1.72024	SLU 1-NL	Max	0.	-469.3444	41-4	0.43006
41	1.72024	SLU 1-NL	Max	0.	-469.3136	41-5	0.
41	2.1503	SLU 1-NL	Max	0.	-396.6662	41-5	0.43006
41	2.1503	SLU 1-NL	Max	0.	-396.632	41-6	0.
41	2.58036	SLU 1-NL	Max	0.	-344.8577	41-6	0.43006
41	2.58036	SLU 1-NL	Max	0.	-344.8213	41-7	0.
41	3.01042	SLU 1-NL	Max	0.	-313.1074	41-7	0.43006
41	0.	SLU 1-NL	Min	0.	-984.2045	41-1	0.
41	0.43006	SLU 1-NL	Min	0.	-820.3792	41-1	0.43006
41	0.43006	SLU 1-NL	Min	0.	-820.3647	41-2	0.
41	0.86012	SLU 1-NL	Min	0.	-680.444	41-2	0.43006
41	0.86012	SLU 1-NL	Min	0.	-680.4231	41-3	0.
41	1.29018	SLU 1-NL	Min	0.	-563.6811	41-3	0.43006
41	1.29018	SLU 1-NL	Min	0.	-563.6548	41-4	0.
41	1.50521	SLU 1-NL	Min	0.	-513.8164	41-4	0.21503
41	1.72024	SLU 1-NL	Min	0.	-469.3444	41-4	0.43006
41	1.72024	SLU 1-NL	Min	0.	-469.3136	41-5	0.
41	2.1503	SLU 1-NL	Min	0.	-396.6662	41-5	0.43006
41	2.1503	SLU 1-NL	Min	0.	-396.632	41-6	0.
41	2.58036	SLU 1-NL	Min	0.	-344.8577	41-6	0.43006
41	2.58036	SLU 1-NL	Min	0.	-344.8213	41-7	0.
41	3.01042	SLU 1-NL	Min	0.	-313.1074	41-7	0.43006
41	0.	SLU 2-NL	Max	0.	-961.3192	41-1	0.
41	0.43006	SLU 2-NL	Max	0.	-844.4718	41-1	0.43006
41	0.43006	SLU 2-NL	Max	0.	-844.4511	41-2	0.
41	0.86012	SLU 2-NL	Max	0.	-744.3613	41-2	0.43006
41	0.86012	SLU 2-NL	Max	0.	-744.3316	41-3	0.
41	1.29018	SLU 2-NL	Max	0.	-660.5226	41-3	0.43006
41	1.29018	SLU 2-NL	Max	0.	-660.4851	41-4	0.
41	1.50521	SLU 2-NL	Max	0.	-624.6345	41-4	0.21503
41	1.72024	SLU 2-NL	Max	0.	-592.456	41-4	0.43006
41	1.72024	SLU 2-NL	Max	0.	-592.4118	41-5	0.
41	2.1503	SLU 2-NL	Max	0.	-539.6361	41-5	0.43006
41	2.1503	SLU 2-NL	Max	0.	-539.5867	41-6	0.
41	2.58036	SLU 2-NL	Max	0.	-501.5097	41-6	0.43006
41	2.58036	SLU 2-NL	Max	0.	-501.4565	41-7	0.
41	3.01042	SLU 2-NL	Max	0.	-477.4915	41-7	0.43006
41	0.	SLU 2-NL	Min	0.	-961.3192	41-1	0.
41	0.43006	SLU 2-NL	Min	0.	-844.4718	41-1	0.43006
41	0.43006	SLU 2-NL	Min	0.	-844.4511	41-2	0.
41	0.86012	SLU 2-NL	Min	0.	-744.3613	41-2	0.43006
41	0.86012	SLU 2-NL	Min	0.	-744.3316	41-3	0.
41	1.29018	SLU 2-NL	Min	0.	-660.5226	41-3	0.43006

Table: Element Forces - Frames, Part 2 of 2

Frame	Station	OutputCase	StepType	M2	M3	FrameElem	ElemStation
	m			KN-m	KN-m		m
41	1.29018	SLU 2-NL	Min	0.	-660.4851	41-4	0.
41	1.50521	SLU 2-NL	Min	0.	-624.6345	41-4	0.21503
41	1.72024	SLU 2-NL	Min	0.	-592.456	41-4	0.43006
41	1.72024	SLU 2-NL	Min	0.	-592.4118	41-5	0.
41	2.1503	SLU 2-NL	Min	0.	-539.6361	41-5	0.43006
41	2.1503	SLU 2-NL	Min	0.	-539.5867	41-6	0.
41	2.58036	SLU 2-NL	Min	0.	-501.5097	41-6	0.43006
41	2.58036	SLU 2-NL	Min	0.	-501.4565	41-7	0.
41	3.01042	SLU 2-NL	Min	0.	-477.4915	41-7	0.43006
41	0.	SLU 3-NL	Max	0.	-680.8186	41-1	0.
41	0.43006	SLU 3-NL	Max	0.	-520.6859	41-1	0.43006
41	0.43006	SLU 3-NL	Max	0.	-520.6839	41-2	0.
41	0.86012	SLU 3-NL	Max	0.	-384.2294	41-2	0.43006
41	0.86012	SLU 3-NL	Max	0.	-384.2265	41-3	0.
41	1.29018	SLU 3-NL	Max	0.	-270.6231	41-3	0.43006
41	1.29018	SLU 3-NL	Max	0.	-270.6195	41-4	0.
41	1.50521	SLU 3-NL	Max	0.	-222.1398	41-4	0.21503
41	1.72024	SLU 3-NL	Max	0.	-179.0288	41-4	0.43006
41	1.72024	SLU 3-NL	Max	0.	-179.0249	41-5	0.
41	2.1503	SLU 3-NL	Max	0.	-108.5989	41-5	0.43006
41	2.1503	SLU 3-NL	Max	0.	-108.5949	41-6	0.
41	2.58036	SLU 3-NL	Max	0.	-58.4789	41-6	0.43006
41	2.58036	SLU 3-NL	Max	0.	-58.4749	41-7	0.
41	3.01042	SLU 3-NL	Max	0.	-27.8093	41-7	0.43006
41	0.	SLU 3-NL	Min	0.	-680.8186	41-1	0.
41	0.43006	SLU 3-NL	Min	0.	-520.6859	41-1	0.43006
41	0.43006	SLU 3-NL	Min	0.	-520.6839	41-2	0.
41	0.86012	SLU 3-NL	Min	0.	-384.2294	41-2	0.43006
41	0.86012	SLU 3-NL	Min	0.	-384.2265	41-3	0.
41	1.29018	SLU 3-NL	Min	0.	-270.6231	41-3	0.43006
41	1.29018	SLU 3-NL	Min	0.	-270.6195	41-4	0.
41	1.50521	SLU 3-NL	Min	0.	-222.1398	41-4	0.21503
41	1.72024	SLU 3-NL	Min	0.	-179.0288	41-4	0.43006
41	1.72024	SLU 3-NL	Min	0.	-179.0249	41-5	0.
41	2.1503	SLU 3-NL	Min	0.	-108.5989	41-5	0.43006
41	2.1503	SLU 3-NL	Min	0.	-108.5949	41-6	0.
41	2.58036	SLU 3-NL	Min	0.	-58.4789	41-6	0.43006
41	2.58036	SLU 3-NL	Min	0.	-58.4749	41-7	0.
41	3.01042	SLU 3-NL	Min	0.	-27.8093	41-7	0.43006
41	0.	SLU 4-NL	Max	0.	-972.3021	41-1	0.
41	0.43006	SLU 4-NL	Max	0.	-813.1832	41-1	0.43006
41	0.43006	SLU 4-NL	Max	0.	-812.8823	41-2	0.
41	0.86012	SLU 4-NL	Max	0.	-676.1247	41-2	0.43006
41	0.86012	SLU 4-NL	Max	0.	-675.8112	41-3	0.
41	1.29018	SLU 4-NL	Max	0.	-561.0114	41-3	0.43006
41	1.29018	SLU 4-NL	Max	0.	-560.6862	41-4	0.
41	1.50521	SLU 4-NL	Max	0.	-512.2164	41-4	0.21503
41	1.72024	SLU 4-NL	Max	0.	-467.4193	41-4	0.43006
41	1.72024	SLU 4-NL	Max	0.	-467.0834	41-5	0.
41	2.1503	SLU 4-NL	Max	0.	-394.9034	41-5	0.43006
41	2.1503	SLU 4-NL	Max	0.	-394.558	41-6	0.
41	2.58036	SLU 4-NL	Max	0.	-342.9975	41-6	0.43006
41	2.58036	SLU 4-NL	Max	0.	-342.6435	41-7	0.
41	3.01042	SLU 4-NL	Max	0.	-311.2124	41-7	0.43006

Table: Element Forces - Frames, Part 2 of 2

Frame	Station	OutputCase	StepType	M2	M3	FrameElem	ElemStation
	m			KN-m	KN-m		m
41	0.	SLU 4-NL	Min	0.	-972.3021	41-1	0.
41	0.43006	SLU 4-NL	Min	0.	-813.1832	41-1	0.43006
41	0.43006	SLU 4-NL	Min	0.	-812.8823	41-2	0.
41	0.86012	SLU 4-NL	Min	0.	-676.1247	41-2	0.43006
41	0.86012	SLU 4-NL	Min	0.	-675.8112	41-3	0.
41	1.29018	SLU 4-NL	Min	0.	-561.0114	41-3	0.43006
41	1.29018	SLU 4-NL	Min	0.	-560.6862	41-4	0.
41	1.50521	SLU 4-NL	Min	0.	-512.2164	41-4	0.21503
41	1.72024	SLU 4-NL	Min	0.	-467.4193	41-4	0.43006
41	1.72024	SLU 4-NL	Min	0.	-467.0834	41-5	0.
41	2.1503	SLU 4-NL	Min	0.	-394.9034	41-5	0.43006
41	2.1503	SLU 4-NL	Min	0.	-394.558	41-6	0.
41	2.58036	SLU 4-NL	Min	0.	-342.9975	41-6	0.43006
41	2.58036	SLU 4-NL	Min	0.	-342.6435	41-7	0.
41	3.01042	SLU 4-NL	Min	0.	-311.2124	41-7	0.43006
41	0.	SLU 5-NL	Max	0.	-669.1889	41-1	0.
41	0.43006	SLU 5-NL	Max	0.	-510.3115	41-1	0.43006
41	0.43006	SLU 5-NL	Max	0.	-510.0989	41-2	0.
41	0.86012	SLU 5-NL	Max	0.	-373.8296	41-2	0.43006
41	0.86012	SLU 5-NL	Max	0.	-373.6119	41-3	0.
41	1.29018	SLU 5-NL	Max	0.	-259.4443	41-3	0.43006
41	1.29018	SLU 5-NL	Max	0.	-259.2218	41-4	0.
41	1.50521	SLU 5-NL	Max	0.	-211.0927	41-4	0.21503
41	1.72024	SLU 5-NL	Max	0.	-166.6386	41-4	0.43006
41	1.72024	SLU 5-NL	Max	0.	-166.4116	41-5	0.
41	2.1503	SLU 5-NL	Max	0.	-94.8865	41-5	0.43006
41	2.1503	SLU 5-NL	Max	0.	-94.6552	41-6	0.
41	2.58036	SLU 5-NL	Max	0.	-43.6554	41-6	0.43006
41	2.58036	SLU 5-NL	Max	0.	-43.42	41-7	0.
41	3.01042	SLU 5-NL	Max	0.	-12.4088	41-7	0.43006
41	0.	SLU 5-NL	Min	0.	-669.1889	41-1	0.
41	0.43006	SLU 5-NL	Min	0.	-510.3115	41-1	0.43006
41	0.43006	SLU 5-NL	Min	0.	-510.0989	41-2	0.
41	0.86012	SLU 5-NL	Min	0.	-373.8296	41-2	0.43006
41	0.86012	SLU 5-NL	Min	0.	-373.6119	41-3	0.
41	1.29018	SLU 5-NL	Min	0.	-259.4443	41-3	0.43006
41	1.29018	SLU 5-NL	Min	0.	-259.2218	41-4	0.
41	1.50521	SLU 5-NL	Min	0.	-211.0927	41-4	0.21503
41	1.72024	SLU 5-NL	Min	0.	-166.6386	41-4	0.43006
41	1.72024	SLU 5-NL	Min	0.	-166.4116	41-5	0.
41	2.1503	SLU 5-NL	Min	0.	-94.8865	41-5	0.43006
41	2.1503	SLU 5-NL	Min	0.	-94.6552	41-6	0.
41	2.58036	SLU 5-NL	Min	0.	-43.6554	41-6	0.43006
41	2.58036	SLU 5-NL	Min	0.	-43.42	41-7	0.
41	3.01042	SLU 5-NL	Min	0.	-12.4088	41-7	0.43006
41	0.	SLU 6-NL	Max	0.	-996.1005	41-1	0.
41	0.43006	SLU 6-NL	Max	0.	-833.9478	41-1	0.43006
41	0.43006	SLU 6-NL	Max	0.	-833.9478	41-2	0.
41	0.86012	SLU 6-NL	Max	0.	-695.4065	41-2	0.43006
41	0.86012	SLU 6-NL	Max	0.	-695.4065	41-3	0.
41	1.29018	SLU 6-NL	Max	0.	-579.6188	41-3	0.43006
41	1.29018	SLU 6-NL	Max	0.	-579.6188	41-4	0.
41	1.50521	SLU 6-NL	Max	0.	-529.9896	41-4	0.21503
41	1.72024	SLU 6-NL	Max	0.	-485.7267	41-4	0.43006

Table: Element Forces - Frames, Part 2 of 2

Frame	Station	OutputCase	StepType	M2	M3	FrameElem	ElemStation
	m			KN-m	KN-m		m
41	1.72024	SLU 6-NL	Max	0.	-485.7267	41-5	0.
41	2.1503	SLU 6-NL	Max	0.	-412.872	41-5	0.43006
41	2.1503	SLU 6-NL	Max	0.	-412.872	41-6	0.
41	2.58036	SLU 6-NL	Max	0.	-360.1957	41-6	0.43006
41	2.58036	SLU 6-NL	Max	0.	-360.1957	41-7	0.
41	3.01042	SLU 6-NL	Max	0.	-326.8382	41-7	0.43006
41	0.	SLU 6-NL	Min	0.	-996.1005	41-1	0.
41	0.43006	SLU 6-NL	Min	0.	-833.9478	41-1	0.43006
41	0.43006	SLU 6-NL	Min	0.	-833.9478	41-2	0.
41	0.86012	SLU 6-NL	Min	0.	-695.4065	41-2	0.43006
41	0.86012	SLU 6-NL	Min	0.	-695.4065	41-3	0.
41	1.29018	SLU 6-NL	Min	0.	-579.6188	41-3	0.43006
41	1.29018	SLU 6-NL	Min	0.	-579.6188	41-4	0.
41	1.50521	SLU 6-NL	Min	0.	-529.9896	41-4	0.21503
41	1.72024	SLU 6-NL	Min	0.	-485.7267	41-4	0.43006
41	1.72024	SLU 6-NL	Min	0.	-485.7267	41-5	0.
41	2.1503	SLU 6-NL	Min	0.	-412.872	41-5	0.43006
41	2.1503	SLU 6-NL	Min	0.	-412.872	41-6	0.
41	2.58036	SLU 6-NL	Min	0.	-360.1957	41-6	0.43006
41	2.58036	SLU 6-NL	Min	0.	-360.1957	41-7	0.
41	3.01042	SLU 6-NL	Min	0.	-326.8382	41-7	0.43006
41	0.	SLU 7-NL	Max	0.	-696.9034	41-1	0.
41	0.43006	SLU 7-NL	Max	0.	-534.5868	41-1	0.43006
41	0.43006	SLU 7-NL	Max	0.	-534.5868	41-2	0.
41	0.86012	SLU 7-NL	Max	0.	-395.891	41-2	0.43006
41	0.86012	SLU 7-NL	Max	0.	-395.891	41-3	0.
41	1.29018	SLU 7-NL	Max	0.	-279.9582	41-3	0.43006
41	1.29018	SLU 7-NL	Max	0.	-279.9582	41-4	0.
41	1.50521	SLU 7-NL	Max	0.	-230.2601	41-4	0.21503
41	1.72024	SLU 7-NL	Max	0.	-185.9307	41-4	0.43006
41	1.72024	SLU 7-NL	Max	0.	-185.9307	41-5	0.
41	2.1503	SLU 7-NL	Max	0.	-112.9507	41-5	0.43006
41	2.1503	SLU 7-NL	Max	0.	-112.9507	41-6	0.
41	2.58036	SLU 7-NL	Max	0.	-60.1605	41-6	0.43006
41	2.58036	SLU 7-NL	Max	0.	-60.1605	41-7	0.
41	3.01042	SLU 7-NL	Max	0.	-26.7021	41-7	0.43006
41	0.	SLU 7-NL	Min	0.	-696.9034	41-1	0.
41	0.43006	SLU 7-NL	Min	0.	-534.5868	41-1	0.43006
41	0.43006	SLU 7-NL	Min	0.	-534.5868	41-2	0.
41	0.86012	SLU 7-NL	Min	0.	-395.891	41-2	0.43006
41	0.86012	SLU 7-NL	Min	0.	-395.891	41-3	0.
41	1.29018	SLU 7-NL	Min	0.	-279.9582	41-3	0.43006
41	1.29018	SLU 7-NL	Min	0.	-279.9582	41-4	0.
41	1.50521	SLU 7-NL	Min	0.	-230.2601	41-4	0.21503
41	1.72024	SLU 7-NL	Min	0.	-185.9307	41-4	0.43006
41	1.72024	SLU 7-NL	Min	0.	-185.9307	41-5	0.
41	2.1503	SLU 7-NL	Min	0.	-112.9507	41-5	0.43006
41	2.1503	SLU 7-NL	Min	0.	-112.9507	41-6	0.
41	2.58036	SLU 7-NL	Min	0.	-60.1605	41-6	0.43006
41	2.58036	SLU 7-NL	Min	0.	-60.1605	41-7	0.
41	3.01042	SLU 7-NL	Min	0.	-26.7021	41-7	0.43006
41	0.	SLE-C-NL	Max	0.	-744.0371	41-1	0.
41	0.43006	SLE-C-NL	Max	0.	-619.701	41-1	0.43006
41	0.43006	SLE-C-NL	Max	0.	-619.6927	41-2	0.

Table: Element Forces - Frames, Part 2 of 2

Frame	Station	OutputCase	StepType	M2	M3	FrameElem	ElemStation
	m			KN-m	KN-m		m
41	0.86012	SLE-C-NL	Max	0.	-513.4997	41-2	0.43006
41	0.86012	SLE-C-NL	Max	0.	-513.4878	41-3	0.
41	1.29018	SLE-C-NL	Max	0.	-424.8768	41-3	0.43006
41	1.29018	SLE-C-NL	Max	0.	-424.8618	41-4	0.
41	1.50521	SLE-C-NL	Max	0.	-387.0247	41-4	0.21503
41	1.72024	SLE-C-NL	Max	0.	-353.2556	41-4	0.43006
41	1.72024	SLE-C-NL	Max	0.	-353.2381	41-5	0.
41	2.1503	SLE-C-NL	Max	0.	-298.0435	41-5	0.43006
41	2.1503	SLE-C-NL	Max	0.	-298.0241	41-6	0.
41	2.58036	SLE-C-NL	Max	0.	-258.632	41-6	0.43006
41	2.58036	SLE-C-NL	Max	0.	-258.6114	41-7	0.
41	3.01042	SLE-C-NL	Max	0.	-234.3957	41-7	0.43006
41	0.	SLE-C-NL	Min	0.	-744.0371	41-1	0.
41	0.43006	SLE-C-NL	Min	0.	-619.701	41-1	0.43006
41	0.43006	SLE-C-NL	Min	0.	-619.6927	41-2	0.
41	0.86012	SLE-C-NL	Min	0.	-513.4997	41-2	0.43006
41	0.86012	SLE-C-NL	Min	0.	-513.4878	41-3	0.
41	1.29018	SLE-C-NL	Min	0.	-424.8768	41-3	0.43006
41	1.29018	SLE-C-NL	Min	0.	-424.8618	41-4	0.
41	1.50521	SLE-C-NL	Min	0.	-387.0247	41-4	0.21503
41	1.72024	SLE-C-NL	Min	0.	-353.2556	41-4	0.43006
41	1.72024	SLE-C-NL	Min	0.	-353.2381	41-5	0.
41	2.1503	SLE-C-NL	Min	0.	-298.0435	41-5	0.43006
41	2.1503	SLE-C-NL	Min	0.	-298.0241	41-6	0.
41	2.58036	SLE-C-NL	Min	0.	-258.632	41-6	0.43006
41	2.58036	SLE-C-NL	Min	0.	-258.6114	41-7	0.
41	3.01042	SLE-C-NL	Min	0.	-234.3957	41-7	0.43006
41	0.	SLE-F-1-NL	Max	0.	-721.3423	41-1	0.
41	0.43006	SLE-F-1-NL	Max	0.	-608.6735	41-1	0.43006
41	0.43006	SLE-F-1-NL	Max	0.	-608.6647	41-2	0.
41	0.86012	SLE-F-1-NL	Max	0.	-512.582	41-2	0.43006
41	0.86012	SLE-F-1-NL	Max	0.	-512.5694	41-3	0.
41	1.29018	SLE-F-1-NL	Max	0.	-432.5192	41-3	0.43006
41	1.29018	SLE-F-1-NL	Max	0.	-432.5033	41-4	0.
41	1.50521	SLE-F-1-NL	Max	0.	-398.3725	41-4	0.21503
41	1.72024	SLE-F-1-NL	Max	0.	-367.9159	41-4	0.43006
41	1.72024	SLE-F-1-NL	Max	0.	-367.8973	41-5	0.
41	2.1503	SLE-F-1-NL	Max	0.	-318.1866	41-5	0.43006
41	2.1503	SLE-F-1-NL	Max	0.	-318.1659	41-6	0.
41	2.58036	SLE-F-1-NL	Max	0.	-282.7291	41-6	0.43006
41	2.58036	SLE-F-1-NL	Max	0.	-282.707	41-7	0.
41	3.01042	SLE-F-1-NL	Max	0.	-260.9228	41-7	0.43006
41	0.	SLE-F-1-NL	Min	0.	-721.3423	41-1	0.
41	0.43006	SLE-F-1-NL	Min	0.	-608.6735	41-1	0.43006
41	0.43006	SLE-F-1-NL	Min	0.	-608.6647	41-2	0.
41	0.86012	SLE-F-1-NL	Min	0.	-512.582	41-2	0.43006
41	0.86012	SLE-F-1-NL	Min	0.	-512.5694	41-3	0.
41	1.29018	SLE-F-1-NL	Min	0.	-432.5192	41-3	0.43006
41	1.29018	SLE-F-1-NL	Min	0.	-432.5033	41-4	0.
41	1.50521	SLE-F-1-NL	Min	0.	-398.3725	41-4	0.21503
41	1.72024	SLE-F-1-NL	Min	0.	-367.9159	41-4	0.43006
41	1.72024	SLE-F-1-NL	Min	0.	-367.8973	41-5	0.
41	2.1503	SLE-F-1-NL	Min	0.	-318.1866	41-5	0.43006
41	2.1503	SLE-F-1-NL	Min	0.	-318.1659	41-6	0.

Table: Element Forces - Frames, Part 2 of 2

Frame	Station	OutputCase	StepType	M2	M3	FrameElem	ElemStation
	m			KN-m	KN-m		m
41	2.58036	SLE-F-1-NL	Min	0.	-282.7291	41-6	0.43006
41	2.58036	SLE-F-1-NL	Min	0.	-282.707	41-7	0.
41	3.01042	SLE-F-1-NL	Min	0.	-260.9228	41-7	0.43006
41	0.	SLE-F-2-NL	Max	0.	-657.8184	41-1	0.
41	0.43006	SLE-F-2-NL	Max	0.	-537.3379	41-1	0.43006
41	0.43006	SLE-F-2-NL	Max	0.	-537.304	41-2	0.
41	0.86012	SLE-F-2-NL	Max	0.	-434.1728	41-2	0.43006
41	0.86012	SLE-F-2-NL	Max	0.	-434.1342	41-3	0.
41	1.29018	SLE-F-2-NL	Max	0.	-347.8336	41-3	0.43006
41	1.29018	SLE-F-2-NL	Max	0.	-347.7908	41-4	0.
41	1.50521	SLE-F-2-NL	Max	0.	-310.9526	41-4	0.21503
41	1.72024	SLE-F-2-NL	Max	0.	-277.789	41-4	0.43006
41	1.72024	SLE-F-2-NL	Max	0.	-277.7423	41-5	0.
41	2.1503	SLE-F-2-NL	Max	0.	-223.4943	41-5	0.43006
41	2.1503	SLE-F-2-NL	Max	0.	-223.4442	41-6	0.
41	2.58036	SLE-F-2-NL	Max	0.	-184.3929	41-6	0.43006
41	2.58036	SLE-F-2-NL	Max	0.	-184.3397	41-7	0.
41	3.01042	SLE-F-2-NL	Max	0.	-159.9157	41-7	0.43006
41	0.	SLE-F-2-NL	Min	0.	-657.8184	41-1	0.
41	0.43006	SLE-F-2-NL	Min	0.	-537.3379	41-1	0.43006
41	0.43006	SLE-F-2-NL	Min	0.	-537.304	41-2	0.
41	0.86012	SLE-F-2-NL	Min	0.	-434.1728	41-2	0.43006
41	0.86012	SLE-F-2-NL	Min	0.	-434.1342	41-3	0.
41	1.29018	SLE-F-2-NL	Min	0.	-347.8336	41-3	0.43006
41	1.29018	SLE-F-2-NL	Min	0.	-347.7908	41-4	0.
41	1.50521	SLE-F-2-NL	Min	0.	-310.9526	41-4	0.21503
41	1.72024	SLE-F-2-NL	Min	0.	-277.789	41-4	0.43006
41	1.72024	SLE-F-2-NL	Min	0.	-277.7423	41-5	0.
41	2.1503	SLE-F-2-NL	Min	0.	-223.4943	41-5	0.43006
41	2.1503	SLE-F-2-NL	Min	0.	-223.4442	41-6	0.
41	2.58036	SLE-F-2-NL	Min	0.	-184.3929	41-6	0.43006
41	2.58036	SLE-F-2-NL	Min	0.	-184.3397	41-7	0.
41	3.01042	SLE-F-2-NL	Min	0.	-159.9157	41-7	0.43006
41	0.	SLE-F-3-NL	Max	0.	-667.6176	41-1	0.
41	0.43006	SLE-F-3-NL	Max	0.	-546.3452	41-1	0.43006
41	0.43006	SLE-F-3-NL	Max	0.	-546.3452	41-2	0.
41	0.86012	SLE-F-3-NL	Max	0.	-442.6825	41-2	0.43006
41	0.86012	SLE-F-3-NL	Max	0.	-442.6825	41-3	0.
41	1.29018	SLE-F-3-NL	Max	0.	-355.9697	41-3	0.43006
41	1.29018	SLE-F-3-NL	Max	0.	-355.9697	41-4	0.
41	1.50521	SLE-F-3-NL	Max	0.	-318.7632	41-4	0.21503
41	1.72024	SLE-F-3-NL	Max	0.	-285.5465	41-4	0.43006
41	1.72024	SLE-F-3-NL	Max	0.	-285.5465	41-5	0.
41	2.1503	SLE-F-3-NL	Max	0.	-230.7531	41-5	0.43006
41	2.1503	SLE-F-3-NL	Max	0.	-230.7531	41-6	0.
41	2.58036	SLE-F-3-NL	Max	0.	-190.9289	41-6	0.43006
41	2.58036	SLE-F-3-NL	Max	0.	-190.9289	41-7	0.
41	3.01042	SLE-F-3-NL	Max	0.	-165.4135	41-7	0.43006
41	0.	SLE-F-3-NL	Min	0.	-667.6176	41-1	0.
41	0.43006	SLE-F-3-NL	Min	0.	-546.3452	41-1	0.43006
41	0.43006	SLE-F-3-NL	Min	0.	-546.3452	41-2	0.
41	0.86012	SLE-F-3-NL	Min	0.	-442.6825	41-2	0.43006
41	0.86012	SLE-F-3-NL	Min	0.	-442.6825	41-3	0.
41	1.29018	SLE-F-3-NL	Min	0.	-355.9697	41-3	0.43006

Table: Element Forces - Frames, Part 2 of 2

Frame	Station	OutputCase	StepType	M2	M3	FrameElem	ElemStation
	m			KN-m	KN-m		m
41	1.29018	SLE-F-3-NL	Min	0.	-355.9697	41-4	0.
41	1.50521	SLE-F-3-NL	Min	0.	-318.7632	41-4	0.21503
41	1.72024	SLE-F-3-NL	Min	0.	-285.5465	41-4	0.43006
41	1.72024	SLE-F-3-NL	Min	0.	-285.5465	41-5	0.
41	2.1503	SLE-F-3-NL	Min	0.	-230.7531	41-5	0.43006
41	2.1503	SLE-F-3-NL	Min	0.	-230.7531	41-6	0.
41	2.58036	SLE-F-3-NL	Min	0.	-190.9289	41-6	0.43006
41	2.58036	SLE-F-3-NL	Min	0.	-190.9289	41-7	0.
41	3.01042	SLE-F-3-NL	Min	0.	-165.4135	41-7	0.43006
41	0.	SLE-QP-NL	Max	0.	-657.9706	41-1	0.
41	0.43006	SLE-QP-NL	Max	0.	-544.8018	41-1	0.43006
41	0.43006	SLE-QP-NL	Max	0.	-544.7957	41-2	0.
41	0.86012	SLE-QP-NL	Max	0.	-448.1585	41-2	0.43006
41	0.86012	SLE-QP-NL	Max	0.	-448.1497	41-3	0.
41	1.29018	SLE-QP-NL	Max	0.	-367.4663	41-3	0.43006
41	1.29018	SLE-QP-NL	Max	0.	-367.4553	41-4	0.
41	1.50521	SLE-QP-NL	Max	0.	-332.9573	41-4	0.21503
41	1.72024	SLE-QP-NL	Max	0.	-302.1339	41-4	0.43006
41	1.72024	SLE-QP-NL	Max	0.	-302.121	41-5	0.
41	2.1503	SLE-QP-NL	Max	0.	-251.5562	41-5	0.43006
41	2.1503	SLE-QP-NL	Max	0.	-251.5419	41-6	0.
41	2.58036	SLE-QP-NL	Max	0.	-215.1146	41-6	0.43006
41	2.58036	SLE-QP-NL	Max	0.	-215.0994	41-7	0.
41	3.01042	SLE-QP-NL	Max	0.	-192.1763	41-7	0.43006
41	0.	SLE-QP-NL	Min	0.	-657.9706	41-1	0.
41	0.43006	SLE-QP-NL	Min	0.	-544.8018	41-1	0.43006
41	0.43006	SLE-QP-NL	Min	0.	-544.7957	41-2	0.
41	0.86012	SLE-QP-NL	Min	0.	-448.1585	41-2	0.43006
41	0.86012	SLE-QP-NL	Min	0.	-448.1497	41-3	0.
41	1.29018	SLE-QP-NL	Min	0.	-367.4663	41-3	0.43006
41	1.29018	SLE-QP-NL	Min	0.	-367.4553	41-4	0.
41	1.50521	SLE-QP-NL	Min	0.	-332.9573	41-4	0.21503
41	1.72024	SLE-QP-NL	Min	0.	-302.1339	41-4	0.43006
41	1.72024	SLE-QP-NL	Min	0.	-302.121	41-5	0.
41	2.1503	SLE-QP-NL	Min	0.	-251.5562	41-5	0.43006
41	2.1503	SLE-QP-NL	Min	0.	-251.5419	41-6	0.
41	2.58036	SLE-QP-NL	Min	0.	-215.1146	41-6	0.43006
41	2.58036	SLE-QP-NL	Min	0.	-215.0994	41-7	0.
41	3.01042	SLE-QP-NL	Min	0.	-192.1763	41-7	0.43006
41	0.	SLV1-NL	Max	0.	-689.1877	41-1	0.
41	0.43006	SLV1-NL	Max	0.	-533.9904	41-1	0.43006
41	0.43006	SLV1-NL	Max	0.	-533.7817	41-2	0.
41	0.86012	SLV1-NL	Max	0.	-400.5515	41-2	0.43006
41	0.86012	SLV1-NL	Max	0.	-400.3364	41-3	0.
41	1.29018	SLV1-NL	Max	0.	-288.6362	41-3	0.43006
41	1.29018	SLV1-NL	Max	0.	-288.4151	41-4	0.
41	1.50521	SLV1-NL	Max	0.	-241.299	41-4	0.21503
41	1.72024	SLV1-NL	Max	0.	-197.796	41-4	0.43006
41	1.72024	SLV1-NL	Max	0.	-197.5692	41-5	0.
41	2.1503	SLV1-NL	Max	0.	-127.5719	41-5	0.43006
41	2.1503	SLV1-NL	Max	0.	-127.3397	41-6	0.
41	2.58036	SLV1-NL	Max	0.	-77.4971	41-6	0.43006
41	2.58036	SLV1-NL	Max	0.	-77.2597	41-7	0.
41	3.01042	SLV1-NL	Max	0.	-47.0986	41-7	0.43006

Table: Element Forces - Frames, Part 2 of 2

Frame	Station	OutputCase	StepType	M2	M3	FrameElem	ElemStation
	m			KN-m	KN-m		m
41	0.	SLV1-NL	Min	0.	-689.1877	41-1	0.
41	0.43006	SLV1-NL	Min	0.	-533.9904	41-1	0.43006
41	0.43006	SLV1-NL	Min	0.	-533.7817	41-2	0.
41	0.86012	SLV1-NL	Min	0.	-400.5515	41-2	0.43006
41	0.86012	SLV1-NL	Min	0.	-400.3364	41-3	0.
41	1.29018	SLV1-NL	Min	0.	-288.6362	41-3	0.43006
41	1.29018	SLV1-NL	Min	0.	-288.4151	41-4	0.
41	1.50521	SLV1-NL	Min	0.	-241.299	41-4	0.21503
41	1.72024	SLV1-NL	Min	0.	-197.796	41-4	0.43006
41	1.72024	SLV1-NL	Min	0.	-197.5692	41-5	0.
41	2.1503	SLV1-NL	Min	0.	-127.5719	41-5	0.43006
41	2.1503	SLV1-NL	Min	0.	-127.3397	41-6	0.
41	2.58036	SLV1-NL	Min	0.	-77.4971	41-6	0.43006
41	2.58036	SLV1-NL	Min	0.	-77.2597	41-7	0.
41	3.01042	SLV1-NL	Min	0.	-47.0986	41-7	0.43006
41	0.	SLV2-NL	Max	0.	-687.9014	41-1	0.
41	0.43006	SLV2-NL	Max	0.	-567.4401	41-1	0.43006
41	0.43006	SLV2-NL	Max	0.	-567.4401	41-2	0.
41	0.86012	SLV2-NL	Max	0.	-464.2986	41-2	0.43006
41	0.86012	SLV2-NL	Max	0.	-464.2986	41-3	0.
41	1.29018	SLV2-NL	Max	0.	-377.7799	41-3	0.43006
41	1.29018	SLV2-NL	Max	0.	-377.7799	41-4	0.
41	1.50521	SLV2-NL	Max	0.	-340.5364	41-4	0.21503
41	1.72024	SLV2-NL	Max	0.	-307.1869	41-4	0.43006
41	1.72024	SLV2-NL	Max	0.	-307.1869	41-5	0.
41	2.1503	SLV2-NL	Max	0.	-251.8221	41-5	0.43006
41	2.1503	SLV2-NL	Max	0.	-251.8221	41-6	0.
41	2.58036	SLV2-NL	Max	0.	-210.9881	41-6	0.43006
41	2.58036	SLV2-NL	Max	0.	-210.9881	41-7	0.
41	3.01042	SLV2-NL	Max	0.	-183.9871	41-7	0.43006
41	0.	SLV2-NL	Min	0.	-687.9014	41-1	0.
41	0.43006	SLV2-NL	Min	0.	-567.4401	41-1	0.43006
41	0.43006	SLV2-NL	Min	0.	-567.4401	41-2	0.
41	0.86012	SLV2-NL	Min	0.	-464.2986	41-2	0.43006
41	0.86012	SLV2-NL	Min	0.	-464.2986	41-3	0.
41	1.29018	SLV2-NL	Min	0.	-377.7799	41-3	0.43006
41	1.29018	SLV2-NL	Min	0.	-377.7799	41-4	0.
41	1.50521	SLV2-NL	Min	0.	-340.5364	41-4	0.21503
41	1.72024	SLV2-NL	Min	0.	-307.1869	41-4	0.43006
41	1.72024	SLV2-NL	Min	0.	-307.1869	41-5	0.
41	2.1503	SLV2-NL	Min	0.	-251.8221	41-5	0.43006
41	2.1503	SLV2-NL	Min	0.	-251.8221	41-6	0.
41	2.58036	SLV2-NL	Min	0.	-210.9881	41-6	0.43006
41	2.58036	SLV2-NL	Min	0.	-210.9881	41-7	0.
41	3.01042	SLV2-NL	Min	0.	-183.9871	41-7	0.43006
41	0.	SLV3-NL	Max	0.	-687.5509	41-1	0.
41	0.43006	SLV3-NL	Max	0.	-532.886	41-1	0.43006
41	0.43006	SLV3-NL	Max	0.	-532.6784	41-2	0.
41	0.86012	SLV3-NL	Max	0.	-399.9784	41-2	0.43006
41	0.86012	SLV3-NL	Max	0.	-399.7644	41-3	0.
41	1.29018	SLV3-NL	Max	0.	-288.5929	41-3	0.43006
41	1.29018	SLV3-NL	Max	0.	-288.3728	41-4	0.
41	1.50521	SLV3-NL	Max	0.	-241.5206	41-4	0.21503
41	1.72024	SLV3-NL	Max	0.	-198.2813	41-4	0.43006

Table: Element Forces - Frames, Part 2 of 2

Frame	Station	OutputCase	StepType	M2	M3	FrameElem	ElemStation
	m			KN-m	KN-m		m
41	1.72024	SLV3-NL	Max	0.	-198.0556	41-5	0.
41	2.1503	SLV3-NL	Max	0.	-128.5856	41-5	0.43006
41	2.1503	SLV3-NL	Max	0.	-128.3546	41-6	0.
41	2.58036	SLV3-NL	Max	0.	-79.0395	41-6	0.43006
41	2.58036	SLV3-NL	Max	0.	-78.8032	41-7	0.
41	3.01042	SLV3-NL	Max	0.	-49.1704	41-7	0.43006
41	0.	SLV3-NL	Min	0.	-687.5509	41-1	0.
41	0.43006	SLV3-NL	Min	0.	-532.886	41-1	0.43006
41	0.43006	SLV3-NL	Min	0.	-532.6784	41-2	0.
41	0.86012	SLV3-NL	Min	0.	-399.9784	41-2	0.43006
41	0.86012	SLV3-NL	Min	0.	-399.7644	41-3	0.
41	1.29018	SLV3-NL	Min	0.	-288.5929	41-3	0.43006
41	1.29018	SLV3-NL	Min	0.	-288.3728	41-4	0.
41	1.50521	SLV3-NL	Min	0.	-241.5206	41-4	0.21503
41	1.72024	SLV3-NL	Min	0.	-198.2813	41-4	0.43006
41	1.72024	SLV3-NL	Min	0.	-198.0556	41-5	0.
41	2.1503	SLV3-NL	Min	0.	-128.5856	41-5	0.43006
41	2.1503	SLV3-NL	Min	0.	-128.3546	41-6	0.
41	2.58036	SLV3-NL	Min	0.	-79.0395	41-6	0.43006
41	2.58036	SLV3-NL	Min	0.	-78.8032	41-7	0.
41	3.01042	SLV3-NL	Min	0.	-49.1704	41-7	0.43006
41	0.	SLV4-NL	Max	0.	-686.2341	41-1	0.
41	0.43006	SLV4-NL	Max	0.	-566.3089	41-1	0.43006
41	0.43006	SLV4-NL	Max	0.	-566.3089	41-2	0.
41	0.86012	SLV4-NL	Max	0.	-463.7036	41-2	0.43006
41	0.86012	SLV4-NL	Max	0.	-463.7036	41-3	0.
41	1.29018	SLV4-NL	Max	0.	-377.721	41-3	0.43006
41	1.29018	SLV4-NL	Max	0.	-377.721	41-4	0.
41	1.50521	SLV4-NL	Max	0.	-340.7456	41-4	0.21503
41	1.72024	SLV4-NL	Max	0.	-307.664	41-4	0.43006
41	1.72024	SLV4-NL	Max	0.	-307.664	41-5	0.
41	2.1503	SLV4-NL	Max	0.	-252.8353	41-5	0.43006
41	2.1503	SLV4-NL	Max	0.	-252.8353	41-6	0.
41	2.58036	SLV4-NL	Max	0.	-212.5372	41-6	0.43006
41	2.58036	SLV4-NL	Max	0.	-212.5372	41-7	0.
41	3.01042	SLV4-NL	Max	0.	-186.0721	41-7	0.43006
41	0.	SLV4-NL	Min	0.	-686.2341	41-1	0.
41	0.43006	SLV4-NL	Min	0.	-566.3089	41-1	0.43006
41	0.43006	SLV4-NL	Min	0.	-566.3089	41-2	0.
41	0.86012	SLV4-NL	Min	0.	-463.7036	41-2	0.43006
41	0.86012	SLV4-NL	Min	0.	-463.7036	41-3	0.
41	1.29018	SLV4-NL	Min	0.	-377.721	41-3	0.43006
41	1.29018	SLV4-NL	Min	0.	-377.721	41-4	0.
41	1.50521	SLV4-NL	Min	0.	-340.7456	41-4	0.21503
41	1.72024	SLV4-NL	Min	0.	-307.664	41-4	0.43006
41	1.72024	SLV4-NL	Min	0.	-307.664	41-5	0.
41	2.1503	SLV4-NL	Min	0.	-252.8353	41-5	0.43006
41	2.1503	SLV4-NL	Min	0.	-252.8353	41-6	0.
41	2.58036	SLV4-NL	Min	0.	-212.5372	41-6	0.43006
41	2.58036	SLV4-NL	Min	0.	-212.5372	41-7	0.
41	3.01042	SLV4-NL	Min	0.	-186.0721	41-7	0.43006
41	0.	SLV5-NL	Max	0.	-681.4985	41-1	0.
41	0.43006	SLV5-NL	Max	0.	-555.1925	41-1	0.43006
41	0.43006	SLV5-NL	Max	0.	-555.1349	41-2	0.

Table: Element Forces - Frames, Part 2 of 2

Frame	Station	OutputCase	StepType	M2	M3	FrameElem	ElemStation
	m			KN-m	KN-m		m
41	0.86012	SLV5-NL	Max	0.	-446.9628	41-2	0.43006
41	0.86012	SLV5-NL	Max	0.	-446.9012	41-3	0.
41	1.29018	SLV5-NL	Max	0.	-356.3299	41-3	0.43006
41	1.29018	SLV5-NL	Max	0.	-356.2648	41-4	0.
41	1.50521	SLV5-NL	Max	0.	-317.6505	41-4	0.21503
41	1.72024	SLV5-NL	Max	0.	-282.7475	41-4	0.43006
41	1.72024	SLV5-NL	Max	0.	-282.6793	41-5	0.
41	2.1503	SLV5-NL	Max	0.	-225.6561	41-5	0.43006
41	2.1503	SLV5-NL	Max	0.	-225.5853	41-6	0.
41	2.58036	SLV5-NL	Max	0.	-184.4837	41-6	0.43006
41	2.58036	SLV5-NL	Max	0.	-184.4106	41-7	0.
41	3.01042	SLV5-NL	Max	0.	-158.6457	41-7	0.43006
41	0.	SLV5-NL	Min	0.	-681.4985	41-1	0.
41	0.43006	SLV5-NL	Min	0.	-555.1925	41-1	0.43006
41	0.43006	SLV5-NL	Min	0.	-555.1349	41-2	0.
41	0.86012	SLV5-NL	Min	0.	-446.9628	41-2	0.43006
41	0.86012	SLV5-NL	Min	0.	-446.9012	41-3	0.
41	1.29018	SLV5-NL	Min	0.	-356.3299	41-3	0.43006
41	1.29018	SLV5-NL	Min	0.	-356.2648	41-4	0.
41	1.50521	SLV5-NL	Min	0.	-317.6505	41-4	0.21503
41	1.72024	SLV5-NL	Min	0.	-282.7475	41-4	0.43006
41	1.72024	SLV5-NL	Min	0.	-282.6793	41-5	0.
41	2.1503	SLV5-NL	Min	0.	-225.6561	41-5	0.43006
41	2.1503	SLV5-NL	Min	0.	-225.5853	41-6	0.
41	2.58036	SLV5-NL	Min	0.	-184.4837	41-6	0.43006
41	2.58036	SLV5-NL	Min	0.	-184.4106	41-7	0.
41	3.01042	SLV5-NL	Min	0.	-158.6457	41-7	0.43006
41	0.	SLV6-NL	Max	0.	-679.4929	41-1	0.
41	0.43006	SLV6-NL	Max	0.	-563.8361	41-1	0.43006
41	0.43006	SLV6-NL	Max	0.	-563.8361	41-2	0.
41	0.86012	SLV6-NL	Max	0.	-465.0391	41-2	0.43006
41	0.86012	SLV6-NL	Max	0.	-465.0391	41-3	0.
41	1.29018	SLV6-NL	Max	0.	-382.431	41-3	0.43006
41	1.29018	SLV6-NL	Max	0.	-382.431	41-4	0.
41	1.50521	SLV6-NL	Max	0.	-346.988	41-4	0.21503
41	1.72024	SLV6-NL	Max	0.	-315.3405	41-4	0.43006
41	1.72024	SLV6-NL	Max	0.	-315.3405	41-5	0.
41	2.1503	SLV6-NL	Max	0.	-263.0964	41-5	0.43006
41	2.1503	SLV6-NL	Max	0.	-263.0964	41-6	0.
41	2.58036	SLV6-NL	Max	0.	-225.0269	41-6	0.43006
41	2.58036	SLV6-NL	Max	0.	-225.0269	41-7	0.
41	3.01042	SLV6-NL	Max	0.	-200.4604	41-7	0.43006
41	0.	SLV6-NL	Min	0.	-679.4929	41-1	0.
41	0.43006	SLV6-NL	Min	0.	-563.8361	41-1	0.43006
41	0.43006	SLV6-NL	Min	0.	-563.8361	41-2	0.
41	0.86012	SLV6-NL	Min	0.	-465.0391	41-2	0.43006
41	0.86012	SLV6-NL	Min	0.	-465.0391	41-3	0.
41	1.29018	SLV6-NL	Min	0.	-382.431	41-3	0.43006
41	1.29018	SLV6-NL	Min	0.	-382.431	41-4	0.
41	1.50521	SLV6-NL	Min	0.	-346.988	41-4	0.21503
41	1.72024	SLV6-NL	Min	0.	-315.3405	41-4	0.43006
41	1.72024	SLV6-NL	Min	0.	-315.3405	41-5	0.
41	2.1503	SLV6-NL	Min	0.	-263.0964	41-5	0.43006
41	2.1503	SLV6-NL	Min	0.	-263.0964	41-6	0.

Table: Element Forces - Frames, Part 2 of 2

Frame	Station	OutputCase	StepType	M2	M3	FrameElem	ElemStation
	m			KN-m	KN-m		m
41	2.58036	SLV6-NL	Min	0.	-225.0269	41-6	0.43006
41	2.58036	SLV6-NL	Min	0.	-225.0269	41-7	0.
41	3.01042	SLV6-NL	Min	0.	-200.4604	41-7	0.43006
41	0.	SLV7-NL	Max	0.	-676.0532	41-1	0.
41	0.43006	SLV7-NL	Max	0.	-551.5224	41-1	0.43006
41	0.43006	SLV7-NL	Max	0.	-551.4659	41-2	0.
41	0.86012	SLV7-NL	Max	0.	-445.0619	41-2	0.43006
41	0.86012	SLV7-NL	Max	0.	-445.0015	41-3	0.
41	1.29018	SLV7-NL	Max	0.	-356.1932	41-3	0.43006
41	1.29018	SLV7-NL	Max	0.	-356.1292	41-4	0.
41	1.50521	SLV7-NL	Max	0.	-318.395	41-4	0.21503
41	1.72024	SLV7-NL	Max	0.	-284.3719	41-4	0.43006
41	1.72024	SLV7-NL	Max	0.	-284.3048	41-5	0.
41	2.1503	SLV7-NL	Max	0.	-229.0405	41-5	0.43006
41	2.1503	SLV7-NL	Max	0.	-228.9708	41-6	0.
41	2.58036	SLV7-NL	Max	0.	-189.629	41-6	0.43006
41	2.58036	SLV7-NL	Max	0.	-189.557	41-7	0.
41	3.01042	SLV7-NL	Max	0.	-165.5545	41-7	0.43006
41	0.	SLV7-NL	Min	0.	-676.0532	41-1	0.
41	0.43006	SLV7-NL	Min	0.	-551.5224	41-1	0.43006
41	0.43006	SLV7-NL	Min	0.	-551.4659	41-2	0.
41	0.86012	SLV7-NL	Min	0.	-445.0619	41-2	0.43006
41	0.86012	SLV7-NL	Min	0.	-445.0015	41-3	0.
41	1.29018	SLV7-NL	Min	0.	-356.1932	41-3	0.43006
41	1.29018	SLV7-NL	Min	0.	-356.1292	41-4	0.
41	1.50521	SLV7-NL	Min	0.	-318.395	41-4	0.21503
41	1.72024	SLV7-NL	Min	0.	-284.3719	41-4	0.43006
41	1.72024	SLV7-NL	Min	0.	-284.3048	41-5	0.
41	2.1503	SLV7-NL	Min	0.	-229.0405	41-5	0.43006
41	2.1503	SLV7-NL	Min	0.	-228.9708	41-6	0.
41	2.58036	SLV7-NL	Min	0.	-189.629	41-6	0.43006
41	2.58036	SLV7-NL	Min	0.	-189.557	41-7	0.
41	3.01042	SLV7-NL	Min	0.	-165.5545	41-7	0.43006
41	0.	SLV8-NL	Max	0.	-673.9245	41-1	0.
41	0.43006	SLV8-NL	Max	0.	-560.0555	41-1	0.43006
41	0.43006	SLV8-NL	Max	0.	-560.0555	41-2	0.
41	0.86012	SLV8-NL	Max	0.	-463.0466	41-2	0.43006
41	0.86012	SLV8-NL	Max	0.	-463.0466	41-3	0.
41	1.29018	SLV8-NL	Max	0.	-382.2265	41-3	0.43006
41	1.29018	SLV8-NL	Max	0.	-382.2265	41-4	0.
41	1.50521	SLV8-NL	Max	0.	-347.6775	41-4	0.21503
41	1.72024	SLV8-NL	Max	0.	-316.924	41-4	0.43006
41	1.72024	SLV8-NL	Max	0.	-316.924	41-5	0.
41	2.1503	SLV8-NL	Max	0.	-266.4678	41-5	0.43006
41	2.1503	SLV8-NL	Max	0.	-266.4678	41-6	0.
41	2.58036	SLV8-NL	Max	0.	-230.1861	41-6	0.43006
41	2.58036	SLV8-NL	Max	0.	-230.1861	41-7	0.
41	3.01042	SLV8-NL	Max	0.	-207.4071	41-7	0.43006
41	0.	SLV8-NL	Min	0.	-673.9245	41-1	0.
41	0.43006	SLV8-NL	Min	0.	-560.0555	41-1	0.43006
41	0.43006	SLV8-NL	Min	0.	-560.0555	41-2	0.
41	0.86012	SLV8-NL	Min	0.	-463.0466	41-2	0.43006
41	0.86012	SLV8-NL	Min	0.	-463.0466	41-3	0.
41	1.29018	SLV8-NL	Min	0.	-382.2265	41-3	0.43006

Table: Element Forces - Frames, Part 2 of 2

Frame	Station	OutputCase	StepType	M2	M3	FrameElem	ElemStation
	m			KN-m	KN-m		m
41	1.29018	SLV8-NL	Min	0.	-382.2265	41-4	0.
41	1.50521	SLV8-NL	Min	0.	-347.6775	41-4	0.21503
41	1.72024	SLV8-NL	Min	0.	-316.924	41-4	0.43006
41	1.72024	SLV8-NL	Min	0.	-316.924	41-5	0.
41	2.1503	SLV8-NL	Min	0.	-266.4678	41-5	0.43006
41	2.1503	SLV8-NL	Min	0.	-266.4678	41-6	0.
41	2.58036	SLV8-NL	Min	0.	-230.1861	41-6	0.43006
41	2.58036	SLV8-NL	Min	0.	-230.1861	41-7	0.
41	3.01042	SLV8-NL	Min	0.	-207.4071	41-7	0.43006
41	0.	SLV9-NL	Max	0.	-666.7531	41-1	0.
41	0.43006	SLV9-NL	Max	0.	-534.1315	41-1	0.43006
41	0.43006	SLV9-NL	Max	0.	-534.0726	41-2	0.
41	0.86012	SLV9-NL	Max	0.	-420.4826	41-2	0.43006
41	0.86012	SLV9-NL	Max	0.	-420.4182	41-3	0.
41	1.29018	SLV9-NL	Max	0.	-325.3249	41-3	0.43006
41	1.29018	SLV9-NL	Max	0.	-325.2555	41-4	0.
41	1.50521	SLV9-NL	Max	0.	-284.7363	41-4	0.21503
41	1.72024	SLV9-NL	Max	0.	-248.1112	41-4	0.43006
41	1.72024	SLV9-NL	Max	0.	-248.0372	41-5	0.
41	2.1503	SLV9-NL	Max	0.	-188.2825	41-5	0.43006
41	2.1503	SLV9-NL	Max	0.	-188.2042	41-6	0.
41	2.58036	SLV9-NL	Max	0.	-145.2688	41-6	0.43006
41	2.58036	SLV9-NL	Max	0.	-145.1866	41-7	0.
41	3.01042	SLV9-NL	Max	0.	-118.4904	41-7	0.43006
41	0.	SLV9-NL	Min	0.	-666.7531	41-1	0.
41	0.43006	SLV9-NL	Min	0.	-534.1315	41-1	0.43006
41	0.43006	SLV9-NL	Min	0.	-534.0726	41-2	0.
41	0.86012	SLV9-NL	Min	0.	-420.4826	41-2	0.43006
41	0.86012	SLV9-NL	Min	0.	-420.4182	41-3	0.
41	1.29018	SLV9-NL	Min	0.	-325.3249	41-3	0.43006
41	1.29018	SLV9-NL	Min	0.	-325.2555	41-4	0.
41	1.50521	SLV9-NL	Min	0.	-284.7363	41-4	0.21503
41	1.72024	SLV9-NL	Min	0.	-248.1112	41-4	0.43006
41	1.72024	SLV9-NL	Min	0.	-248.0372	41-5	0.
41	2.1503	SLV9-NL	Min	0.	-188.2825	41-5	0.43006
41	2.1503	SLV9-NL	Min	0.	-188.2042	41-6	0.
41	2.58036	SLV9-NL	Min	0.	-145.2688	41-6	0.43006
41	2.58036	SLV9-NL	Min	0.	-145.1866	41-7	0.
41	3.01042	SLV9-NL	Min	0.	-118.4904	41-7	0.43006
41	0.	SLV10-NL	Max	0.	-674.0126	41-1	0.
41	0.43006	SLV10-NL	Max	0.	-564.5452	41-1	0.43006
41	0.43006	SLV10-NL	Max	0.	-564.5452	41-2	0.
41	0.86012	SLV10-NL	Max	0.	-471.0866	41-2	0.43006
41	0.86012	SLV10-NL	Max	0.	-471.0866	41-3	0.
41	1.29018	SLV10-NL	Max	0.	-393.0139	41-3	0.43006
41	1.29018	SLV10-NL	Max	0.	-393.0139	41-4	0.
41	1.50521	SLV10-NL	Max	0.	-359.5526	41-4	0.21503
41	1.72024	SLV10-NL	Max	0.	-329.7039	41-4	0.43006
41	1.72024	SLV10-NL	Max	0.	-329.7039	41-5	0.
41	2.1503	SLV10-NL	Max	0.	-280.5334	41-5	0.43006
41	2.1503	SLV10-NL	Max	0.	-280.5334	41-6	0.
41	2.58036	SLV10-NL	Max	0.	-244.8789	41-6	0.43006
41	2.58036	SLV10-NL	Max	0.	-244.8789	41-7	0.
41	3.01042	SLV10-NL	Max	0.	-222.1165	41-7	0.43006

Table: Element Forces - Frames, Part 2 of 2

Frame	Station	OutputCase	StepType	M2	M3	FrameElem	ElemStation
	m			KN-m	KN-m		m
41	0.	SLV10-NL	Min	0.	-674.0126	41-1	0.
41	0.43006	SLV10-NL	Min	0.	-564.5452	41-1	0.43006
41	0.43006	SLV10-NL	Min	0.	-564.5452	41-2	0.
41	0.86012	SLV10-NL	Min	0.	-471.0866	41-2	0.43006
41	0.86012	SLV10-NL	Min	0.	-471.0866	41-3	0.
41	1.29018	SLV10-NL	Min	0.	-393.0139	41-3	0.43006
41	1.29018	SLV10-NL	Min	0.	-393.0139	41-4	0.
41	1.50521	SLV10-NL	Min	0.	-359.5526	41-4	0.21503
41	1.72024	SLV10-NL	Min	0.	-329.7039	41-4	0.43006
41	1.72024	SLV10-NL	Min	0.	-329.7039	41-5	0.
41	2.1503	SLV10-NL	Min	0.	-280.5334	41-5	0.43006
41	2.1503	SLV10-NL	Min	0.	-280.5334	41-6	0.
41	2.58036	SLV10-NL	Min	0.	-244.8789	41-6	0.43006
41	2.58036	SLV10-NL	Min	0.	-244.8789	41-7	0.
41	3.01042	SLV10-NL	Min	0.	-222.1165	41-7	0.43006
41	0.	SLV11-NL	Max	0.	-683.379	41-1	0.
41	0.43006	SLV11-NL	Max	0.	-550.5405	41-1	0.43006
41	0.43006	SLV11-NL	Max	0.	-550.4805	41-2	0.
41	0.86012	SLV11-NL	Max	0.	-436.6613	41-2	0.43006
41	0.86012	SLV11-NL	Max	0.	-436.5955	41-3	0.
41	1.29018	SLV11-NL	Max	0.	-341.2661	41-3	0.43006
41	1.29018	SLV11-NL	Max	0.	-341.1949	41-4	0.
41	1.50521	SLV11-NL	Max	0.	-300.5566	41-4	0.21503
41	1.72024	SLV11-NL	Max	0.	-263.8123	41-4	0.43006
41	1.72024	SLV11-NL	Max	0.	-263.7362	41-5	0.
41	2.1503	SLV11-NL	Max	0.	-203.7449	41-5	0.43006
41	2.1503	SLV11-NL	Max	0.	-203.6643	41-6	0.
41	2.58036	SLV11-NL	Max	0.	-160.4973	41-6	0.43006
41	2.58036	SLV11-NL	Max	0.	-160.4125	41-7	0.
41	3.01042	SLV11-NL	Max	0.	-133.492	41-7	0.43006
41	0.	SLV11-NL	Min	0.	-683.379	41-1	0.
41	0.43006	SLV11-NL	Min	0.	-550.5405	41-1	0.43006
41	0.43006	SLV11-NL	Min	0.	-550.4805	41-2	0.
41	0.86012	SLV11-NL	Min	0.	-436.6613	41-2	0.43006
41	0.86012	SLV11-NL	Min	0.	-436.5955	41-3	0.
41	1.29018	SLV11-NL	Min	0.	-341.2661	41-3	0.43006
41	1.29018	SLV11-NL	Min	0.	-341.1949	41-4	0.
41	1.50521	SLV11-NL	Min	0.	-300.5566	41-4	0.21503
41	1.72024	SLV11-NL	Min	0.	-263.8123	41-4	0.43006
41	1.72024	SLV11-NL	Min	0.	-263.7362	41-5	0.
41	2.1503	SLV11-NL	Min	0.	-203.7449	41-5	0.43006
41	2.1503	SLV11-NL	Min	0.	-203.6643	41-6	0.
41	2.58036	SLV11-NL	Min	0.	-160.4973	41-6	0.43006
41	2.58036	SLV11-NL	Min	0.	-160.4125	41-7	0.
41	3.01042	SLV11-NL	Min	0.	-133.492	41-7	0.43006
41	0.	SLV12-NL	Max	0.	-690.4689	41-1	0.
41	0.43006	SLV12-NL	Max	0.	-580.8052	41-1	0.43006
41	0.43006	SLV12-NL	Max	0.	-580.8052	41-2	0.
41	0.86012	SLV12-NL	Max	0.	-487.1499	41-2	0.43006
41	0.86012	SLV12-NL	Max	0.	-487.1499	41-3	0.
41	1.29018	SLV12-NL	Max	0.	-408.8801	41-3	0.43006
41	1.29018	SLV12-NL	Max	0.	-408.8801	41-4	0.
41	1.50521	SLV12-NL	Max	0.	-375.3201	41-4	0.21503
41	1.72024	SLV12-NL	Max	0.	-345.3725	41-4	0.43006

Table: Element Forces - Frames, Part 2 of 2

Frame	Station	OutputCase	StepType	M2	M3	FrameElem	ElemStation
	m			KN-m	KN-m		m
41	1.72024	SLV12-NL	Max	0.	-345.3725	41-5	0.
41	2.1503	SLV12-NL	Max	0.	-296.004	41-5	0.43006
41	2.1503	SLV12-NL	Max	0.	-296.004	41-6	0.
41	2.58036	SLV12-NL	Max	0.	-260.151	41-6	0.43006
41	2.58036	SLV12-NL	Max	0.	-260.151	41-7	0.
41	3.01042	SLV12-NL	Max	0.	-237.1894	41-7	0.43006
41	0.	SLV12-NL	Min	0.	-690.4689	41-1	0.
41	0.43006	SLV12-NL	Min	0.	-580.8052	41-1	0.43006
41	0.43006	SLV12-NL	Min	0.	-580.8052	41-2	0.
41	0.86012	SLV12-NL	Min	0.	-487.1499	41-2	0.43006
41	0.86012	SLV12-NL	Min	0.	-487.1499	41-3	0.
41	1.29018	SLV12-NL	Min	0.	-408.8801	41-3	0.43006
41	1.29018	SLV12-NL	Min	0.	-408.8801	41-4	0.
41	1.50521	SLV12-NL	Min	0.	-375.3201	41-4	0.21503
41	1.72024	SLV12-NL	Min	0.	-345.3725	41-4	0.43006
41	1.72024	SLV12-NL	Min	0.	-345.3725	41-5	0.
41	2.1503	SLV12-NL	Min	0.	-296.004	41-5	0.43006
41	2.1503	SLV12-NL	Min	0.	-296.004	41-6	0.
41	2.58036	SLV12-NL	Min	0.	-260.151	41-6	0.43006
41	2.58036	SLV12-NL	Min	0.	-260.151	41-7	0.
41	3.01042	SLV12-NL	Min	0.	-237.1894	41-7	0.43006
41	0.	SLV13-NL	Max	0.	-647.0871	41-1	0.
41	0.43006	SLV13-NL	Max	0.	-528.6912	41-1	0.43006
41	0.43006	SLV13-NL	Max	0.	-528.6778	41-2	0.
41	0.86012	SLV13-NL	Max	0.	-427.5502	41-2	0.43006
41	0.86012	SLV13-NL	Max	0.	-427.5335	41-3	0.
41	1.29018	SLV13-NL	Max	0.	-343.105	41-3	0.43006
41	1.29018	SLV13-NL	Max	0.	-343.0854	41-4	0.
41	1.50521	SLV13-NL	Max	0.	-307.0316	41-4	0.21503
41	1.72024	SLV13-NL	Max	0.	-274.7735	41-4	0.43006
41	1.72024	SLV13-NL	Max	0.	-274.7515	41-5	0.
41	2.1503	SLV13-NL	Max	0.	-221.9609	41-5	0.43006
41	2.1503	SLV13-NL	Max	0.	-221.9368	41-6	0.
41	2.58036	SLV13-NL	Max	0.	-184.0603	41-6	0.43006
41	2.58036	SLV13-NL	Max	0.	-184.0344	41-7	0.
41	3.01042	SLV13-NL	Max	0.	-160.4523	41-7	0.43006
41	0.	SLV13-NL	Min	0.	-647.0871	41-1	0.
41	0.43006	SLV13-NL	Min	0.	-528.6912	41-1	0.43006
41	0.43006	SLV13-NL	Min	0.	-528.6778	41-2	0.
41	0.86012	SLV13-NL	Min	0.	-427.5502	41-2	0.43006
41	0.86012	SLV13-NL	Min	0.	-427.5335	41-3	0.
41	1.29018	SLV13-NL	Min	0.	-343.105	41-3	0.43006
41	1.29018	SLV13-NL	Min	0.	-343.0854	41-4	0.
41	1.50521	SLV13-NL	Min	0.	-307.0316	41-4	0.21503
41	1.72024	SLV13-NL	Min	0.	-274.7735	41-4	0.43006
41	1.72024	SLV13-NL	Min	0.	-274.7515	41-5	0.
41	2.1503	SLV13-NL	Min	0.	-221.9609	41-5	0.43006
41	2.1503	SLV13-NL	Min	0.	-221.9368	41-6	0.
41	2.58036	SLV13-NL	Min	0.	-184.0603	41-6	0.43006
41	2.58036	SLV13-NL	Min	0.	-184.0344	41-7	0.
41	3.01042	SLV13-NL	Min	0.	-160.4523	41-7	0.43006
41	0.	SLV14-NL	Max	0.	-647.9485	41-1	0.
41	0.43006	SLV14-NL	Max	0.	-536.4724	41-1	0.43006
41	0.43006	SLV14-NL	Max	0.	-536.4724	41-2	0.

Table: Element Forces - Frames, Part 2 of 2

Frame	Station	OutputCase	StepType	M2	M3	FrameElem	ElemStation
	m			KN-m	KN-m		m
41	0.86012	SLV14-NL	Max	0.	-441.4636	41-2	0.43006
41	0.86012	SLV14-NL	Max	0.	-441.4636	41-3	0.
41	1.29018	SLV14-NL	Max	0.	-362.2732	41-3	0.43006
41	1.29018	SLV14-NL	Max	0.	-362.272	41-4	0.
41	1.50521	SLV14-NL	Max	0.	-328.4252	41-4	0.21503
41	1.72024	SLV14-NL	Max	0.	-298.2896	41-4	0.43006
41	1.72024	SLV14-NL	Max	0.	-298.2875	41-5	0.
41	2.1503	SLV14-NL	Max	0.	-248.8903	41-5	0.43006
41	2.1503	SLV14-NL	Max	0.	-248.8877	41-6	0.
41	2.58036	SLV14-NL	Max	0.	-213.4392	41-6	0.43006
41	2.58036	SLV14-NL	Max	0.	-213.4367	41-7	0.
41	3.01042	SLV14-NL	Max	0.	-191.2865	41-7	0.43006
41	0.	SLV14-NL	Min	0.	-647.9485	41-1	0.
41	0.43006	SLV14-NL	Min	0.	-536.4724	41-1	0.43006
41	0.43006	SLV14-NL	Min	0.	-536.4724	41-2	0.
41	0.86012	SLV14-NL	Min	0.	-441.4636	41-2	0.43006
41	0.86012	SLV14-NL	Min	0.	-441.4636	41-3	0.
41	1.29018	SLV14-NL	Min	0.	-362.2732	41-3	0.43006
41	1.29018	SLV14-NL	Min	0.	-362.272	41-4	0.
41	1.50521	SLV14-NL	Min	0.	-328.4252	41-4	0.21503
41	1.72024	SLV14-NL	Min	0.	-298.2896	41-4	0.43006
41	1.72024	SLV14-NL	Min	0.	-298.2875	41-5	0.
41	2.1503	SLV14-NL	Min	0.	-248.8903	41-5	0.43006
41	2.1503	SLV14-NL	Min	0.	-248.8877	41-6	0.
41	2.58036	SLV14-NL	Min	0.	-213.4392	41-6	0.43006
41	2.58036	SLV14-NL	Min	0.	-213.4367	41-7	0.
41	3.01042	SLV14-NL	Min	0.	-191.2865	41-7	0.43006
41	0.	SLV15-NL	Max	0.	-702.6931	41-1	0.
41	0.43006	SLV15-NL	Max	0.	-583.1681	41-1	0.43006
41	0.43006	SLV15-NL	Max	0.	-583.1526	41-2	0.
41	0.86012	SLV15-NL	Max	0.	-480.9192	41-2	0.43006
41	0.86012	SLV15-NL	Max	0.	-480.8996	41-3	0.
41	1.29018	SLV15-NL	Max	0.	-395.4033	41-3	0.43006
41	1.29018	SLV15-NL	Max	0.	-395.38	41-4	0.
41	1.50521	SLV15-NL	Max	0.	-358.818	41-4	0.21503
41	1.72024	SLV15-NL	Max	0.	-326.0513	41-4	0.43006
41	1.72024	SLV15-NL	Max	0.	-326.025	41-5	0.
41	2.1503	SLV15-NL	Max	0.	-272.2795	41-5	0.43006
41	2.1503	SLV15-NL	Max	0.	-272.2505	41-6	0.
41	2.58036	SLV15-NL	Max	0.	-233.4891	41-6	0.43006
41	2.58036	SLV15-NL	Max	0.	-233.4581	41-7	0.
41	3.01042	SLV15-NL	Max	0.	-209.0664	41-7	0.43006
41	0.	SLV15-NL	Min	0.	-702.6931	41-1	0.
41	0.43006	SLV15-NL	Min	0.	-583.1681	41-1	0.43006
41	0.43006	SLV15-NL	Min	0.	-583.1526	41-2	0.
41	0.86012	SLV15-NL	Min	0.	-480.9192	41-2	0.43006
41	0.86012	SLV15-NL	Min	0.	-480.8996	41-3	0.
41	1.29018	SLV15-NL	Min	0.	-395.4033	41-3	0.43006
41	1.29018	SLV15-NL	Min	0.	-395.38	41-4	0.
41	1.50521	SLV15-NL	Min	0.	-358.818	41-4	0.21503
41	1.72024	SLV15-NL	Min	0.	-326.0513	41-4	0.43006
41	1.72024	SLV15-NL	Min	0.	-326.025	41-5	0.
41	2.1503	SLV15-NL	Min	0.	-272.2795	41-5	0.43006
41	2.1503	SLV15-NL	Min	0.	-272.2505	41-6	0.

Table: Element Forces - Frames, Part 2 of 2

Frame	Station	OutputCase	StepType	M2	M3	FrameElem	ElemStation
	m			KN-m	KN-m		m
41	2.58036	SLV15-NL	Min	0.	-233.4891	41-6	0.43006
41	2.58036	SLV15-NL	Min	0.	-233.4581	41-7	0.
41	3.01042	SLV15-NL	Min	0.	-209.0664	41-7	0.43006
41	0.	SLV16-NL	Max	0.	-703.2178	41-1	0.
41	0.43006	SLV16-NL	Max	0.	-590.5323	41-1	0.43006
41	0.43006	SLV16-NL	Max	0.	-590.5323	41-2	0.
41	0.86012	SLV16-NL	Max	0.	-494.3127	41-2	0.43006
41	0.86012	SLV16-NL	Max	0.	-494.3105	41-3	0.
41	1.29018	SLV16-NL	Max	0.	-413.9702	41-3	0.43006
41	1.29018	SLV16-NL	Max	0.	-413.966	41-4	0.
41	1.50521	SLV16-NL	Max	0.	-379.5841	41-4	0.21503
41	1.72024	SLV16-NL	Max	0.	-348.9131	41-4	0.43006
41	1.72024	SLV16-NL	Max	0.	-348.9074	41-5	0.
41	2.1503	SLV16-NL	Max	0.	-298.5342	41-5	0.43006
41	2.1503	SLV16-NL	Max	0.	-298.5276	41-6	0.
41	2.58036	SLV16-NL	Max	0.	-262.2107	41-6	0.43006
41	2.58036	SLV16-NL	Max	0.	-262.2038	41-7	0.
41	3.01042	SLV16-NL	Max	0.	-239.3026	41-7	0.43006
41	0.	SLV16-NL	Min	0.	-703.2178	41-1	0.
41	0.43006	SLV16-NL	Min	0.	-590.5323	41-1	0.43006
41	0.43006	SLV16-NL	Min	0.	-590.5323	41-2	0.
41	0.86012	SLV16-NL	Min	0.	-494.3127	41-2	0.43006
41	0.86012	SLV16-NL	Min	0.	-494.3105	41-3	0.
41	1.29018	SLV16-NL	Min	0.	-413.9702	41-3	0.43006
41	1.29018	SLV16-NL	Min	0.	-413.966	41-4	0.
41	1.50521	SLV16-NL	Min	0.	-379.5841	41-4	0.21503
41	1.72024	SLV16-NL	Min	0.	-348.9131	41-4	0.43006
41	1.72024	SLV16-NL	Min	0.	-348.9074	41-5	0.
41	2.1503	SLV16-NL	Min	0.	-298.5342	41-5	0.43006
41	2.1503	SLV16-NL	Min	0.	-298.5276	41-6	0.
41	2.58036	SLV16-NL	Min	0.	-262.2107	41-6	0.43006
41	2.58036	SLV16-NL	Min	0.	-262.2038	41-7	0.
41	3.01042	SLV16-NL	Min	0.	-239.3026	41-7	0.43006
42	0.	SLU 1-NL	Max	0.	-313.068	42-1	0.
42	0.4734	SLU 1-NL	Max	0.	-300.341	42-1	0.4734
42	0.4734	SLU 1-NL	Max	0.	-300.2999	42-2	0.
42	0.94681	SLU 1-NL	Max	0.	-309.6513	42-2	0.4734
42	0.94681	SLU 1-NL	Max	0.	-309.6118	42-3	0.
42	1.42021	SLU 1-NL	Max	0.	-339.7956	42-3	0.4734
42	1.42021	SLU 1-NL	Max	0.	-339.7587	42-4	0.
42	1.89361	SLU 1-NL	Max	0.	-389.5042	42-4	0.4734
42	1.89361	SLU 1-NL	Max	0.	-389.4708	42-5	0.
42	2.36702	SLU 1-NL	Max	0.	-457.4869	42-5	0.4734
42	2.36702	SLU 1-NL	Max	0.	-457.4578	42-6	0.
42	2.84042	SLU 1-NL	Max	0.	-542.4342	42-6	0.4734
42	0.	SLU 1-NL	Min	0.	-313.068	42-1	0.
42	0.4734	SLU 1-NL	Min	0.	-300.341	42-1	0.4734
42	0.4734	SLU 1-NL	Min	0.	-300.2999	42-2	0.
42	0.94681	SLU 1-NL	Min	0.	-309.6513	42-2	0.4734
42	0.94681	SLU 1-NL	Min	0.	-309.6118	42-3	0.
42	1.42021	SLU 1-NL	Min	0.	-339.7956	42-3	0.4734
42	1.42021	SLU 1-NL	Min	0.	-339.7587	42-4	0.
42	1.89361	SLU 1-NL	Min	0.	-389.5042	42-4	0.4734
42	1.89361	SLU 1-NL	Min	0.	-389.4708	42-5	0.

Table: Element Forces - Frames, Part 2 of 2

Frame	Station	OutputCase	StepType	M2	M3	FrameElem	ElemStation
	m			KN-m	KN-m		m
42	2.36702	SLU 1-NL	Min	0.	-457.4869	42-5	0.4734
42	2.36702	SLU 1-NL	Min	0.	-457.4578	42-6	0.
42	2.84042	SLU 1-NL	Min	0.	-542.4342	42-6	0.4734
42	0.	SLU 2-NL	Max	0.	-477.4336	42-1	0.
42	0.4734	SLU 2-NL	Max	0.	-466.6155	42-1	0.4734
42	0.4734	SLU 2-NL	Max	0.	-466.5551	42-2	0.
42	0.94681	SLU 2-NL	Max	0.	-471.1492	42-2	0.4734
42	0.94681	SLU 2-NL	Max	0.	-471.0911	42-3	0.
42	1.42021	SLU 2-NL	Max	0.	-490.1157	42-3	0.4734
42	1.42021	SLU 2-NL	Max	0.	-490.0617	42-4	0.
42	1.89361	SLU 2-NL	Max	0.	-522.4959	42-4	0.4734
42	1.89361	SLU 2-NL	Max	0.	-522.4473	42-5	0.
42	2.36702	SLU 2-NL	Max	0.	-567.2393	42-5	0.4734
42	2.36702	SLU 2-NL	Max	0.	-567.1973	42-6	0.
42	2.84042	SLU 2-NL	Max	0.	-623.2684	42-6	0.4734
42	0.	SLU 2-NL	Min	0.	-477.4336	42-1	0.
42	0.4734	SLU 2-NL	Min	0.	-466.6155	42-1	0.4734
42	0.4734	SLU 2-NL	Min	0.	-466.5551	42-2	0.
42	0.94681	SLU 2-NL	Min	0.	-471.1492	42-2	0.4734
42	0.94681	SLU 2-NL	Min	0.	-471.0911	42-3	0.
42	1.42021	SLU 2-NL	Min	0.	-490.1157	42-3	0.4734
42	1.42021	SLU 2-NL	Min	0.	-490.0617	42-4	0.
42	1.89361	SLU 2-NL	Min	0.	-522.4959	42-4	0.4734
42	1.89361	SLU 2-NL	Min	0.	-522.4473	42-5	0.
42	2.36702	SLU 2-NL	Min	0.	-567.2393	42-5	0.4734
42	2.36702	SLU 2-NL	Min	0.	-567.1973	42-6	0.
42	2.84042	SLU 2-NL	Min	0.	-623.2684	42-6	0.4734
42	0.	SLU 3-NL	Max	0.	-27.8053	42-1	0.
42	0.4734	SLU 3-NL	Max	0.	-15.4968	42-1	0.4734
42	0.4734	SLU 3-NL	Max	0.	-15.4928	42-2	0.
42	0.94681	SLU 3-NL	Max	0.	-24.4884	42-2	0.4734
42	0.94681	SLU 3-NL	Max	0.	-24.4846	42-3	0.
42	1.42021	SLU 3-NL	Max	0.	-53.5651	42-3	0.4734
42	1.42021	SLU 3-NL	Max	0.	-53.5614	42-4	0.
42	1.89361	SLU 3-NL	Max	0.	-101.5077	42-4	0.4734
42	1.89361	SLU 3-NL	Max	0.	-101.5042	42-5	0.
42	2.36702	SLU 3-NL	Max	0.	-167.0958	42-5	0.4734
42	2.36702	SLU 3-NL	Max	0.	-167.0925	42-6	0.
42	2.84042	SLU 3-NL	Max	0.	-249.1051	42-6	0.4734
42	0.	SLU 3-NL	Min	0.	-27.8053	42-1	0.
42	0.4734	SLU 3-NL	Min	0.	-15.4968	42-1	0.4734
42	0.4734	SLU 3-NL	Min	0.	-15.4928	42-2	0.
42	0.94681	SLU 3-NL	Min	0.	-24.4884	42-2	0.4734
42	0.94681	SLU 3-NL	Min	0.	-24.4846	42-3	0.
42	1.42021	SLU 3-NL	Min	0.	-53.5651	42-3	0.4734
42	1.42021	SLU 3-NL	Min	0.	-53.5614	42-4	0.
42	1.89361	SLU 3-NL	Min	0.	-101.5077	42-4	0.4734
42	1.89361	SLU 3-NL	Min	0.	-101.5042	42-5	0.
42	2.36702	SLU 3-NL	Min	0.	-167.0958	42-5	0.4734
42	2.36702	SLU 3-NL	Min	0.	-167.0925	42-6	0.
42	2.84042	SLU 3-NL	Min	0.	-249.1051	42-6	0.4734
42	0.	SLU 4-NL	Max	0.	-310.8329	42-1	0.
42	0.4734	SLU 4-NL	Max	0.	-298.8801	42-1	0.4734
42	0.4734	SLU 4-NL	Max	0.	-298.4752	42-2	0.

Table: Element Forces - Frames, Part 2 of 2

Frame	Station	OutputCase	StepType	M2	M3	FrameElem	ElemStation
	m			KN-m	KN-m		m
42	0.94681	SLU 4-NL	Max	0.	-309.5216	42-2	0.4734
42	0.94681	SLU 4-NL	Max	0.	-309.1108	42-3	0.
42	1.42021	SLU 4-NL	Max	0.	-342.3565	42-3	0.4734
42	1.42021	SLU 4-NL	Max	0.	-341.9409	42-4	0.
42	1.89361	SLU 4-NL	Max	0.	-396.5618	42-4	0.4734
42	1.89361	SLU 4-NL	Max	0.	-396.1422	42-5	0.
42	2.36702	SLU 4-NL	Max	0.	-471.2936	42-5	0.4734
42	2.36702	SLU 4-NL	Max	0.	-470.8709	42-6	0.
42	2.84042	SLU 4-NL	Max	0.	-565.6889	42-6	0.4734
42	0.	SLU 4-NL	Min	0.	-310.8329	42-1	0.
42	0.4734	SLU 4-NL	Min	0.	-298.8801	42-1	0.4734
42	0.4734	SLU 4-NL	Min	0.	-298.4752	42-2	0.
42	0.94681	SLU 4-NL	Min	0.	-309.5216	42-2	0.4734
42	0.94681	SLU 4-NL	Min	0.	-309.1108	42-3	0.
42	1.42021	SLU 4-NL	Min	0.	-342.3565	42-3	0.4734
42	1.42021	SLU 4-NL	Min	0.	-341.9409	42-4	0.
42	1.89361	SLU 4-NL	Min	0.	-396.5618	42-4	0.4734
42	1.89361	SLU 4-NL	Min	0.	-396.1422	42-5	0.
42	2.36702	SLU 4-NL	Min	0.	-471.2936	42-5	0.4734
42	2.36702	SLU 4-NL	Min	0.	-470.8709	42-6	0.
42	2.84042	SLU 4-NL	Min	0.	-565.6889	42-6	0.4734
42	0.	SLU 5-NL	Max	0.	-12.1573	42-1	0.
42	0.4734	SLU 5-NL	Max	0.	-0.4759	42-1	0.4734
42	0.4734	SLU 5-NL	Max	0.	-0.2073	42-2	0.
42	0.94681	SLU 5-NL	Max	0.	-11.3245	42-2	0.4734
42	0.94681	SLU 5-NL	Max	0.	-11.0508	42-3	0.
42	1.42021	SLU 5-NL	Max	0.	-44.1988	42-3	0.4734
42	1.42021	SLU 5-NL	Max	0.	-43.92	42-4	0.
42	1.89361	SLU 5-NL	Max	0.	-98.3322	42-4	0.4734
42	1.89361	SLU 5-NL	Max	0.	-98.0483	42-5	0.
42	2.36702	SLU 5-NL	Max	0.	-172.9576	42-5	0.4734
42	2.36702	SLU 5-NL	Max	0.	-172.6687	42-6	0.
42	2.84042	SLU 5-NL	Max	0.	-267.3046	42-6	0.4734
42	0.	SLU 5-NL	Min	0.	-12.1573	42-1	0.
42	0.4734	SLU 5-NL	Min	0.	-0.4759	42-1	0.4734
42	0.4734	SLU 5-NL	Min	0.	-0.2073	42-2	0.
42	0.94681	SLU 5-NL	Min	0.	-11.3245	42-2	0.4734
42	0.94681	SLU 5-NL	Min	0.	-11.0508	42-3	0.
42	1.42021	SLU 5-NL	Min	0.	-44.1988	42-3	0.4734
42	1.42021	SLU 5-NL	Min	0.	-43.92	42-4	0.
42	1.89361	SLU 5-NL	Min	0.	-98.3322	42-4	0.4734
42	1.89361	SLU 5-NL	Min	0.	-98.0483	42-5	0.
42	2.36702	SLU 5-NL	Min	0.	-172.9576	42-5	0.4734
42	2.36702	SLU 5-NL	Min	0.	-172.6687	42-6	0.
42	2.84042	SLU 5-NL	Min	0.	-267.3046	42-6	0.4734
42	0.	SLU 6-NL	Max	0.	-326.8382	42-1	0.
42	0.4734	SLU 6-NL	Max	0.	-311.4181	42-1	0.4734
42	0.4734	SLU 6-NL	Max	0.	-311.4181	42-2	0.
42	0.94681	SLU 6-NL	Max	0.	-317.1571	42-2	0.4734
42	0.94681	SLU 6-NL	Max	0.	-317.1571	42-3	0.
42	1.42021	SLU 6-NL	Max	0.	-342.8449	42-3	0.4734
42	1.42021	SLU 6-NL	Max	0.	-342.8449	42-4	0.
42	1.89361	SLU 6-NL	Max	0.	-387.2697	42-4	0.4734
42	1.89361	SLU 6-NL	Max	0.	-387.2697	42-5	0.

Table: Element Forces - Frames, Part 2 of 2

Frame	Station	OutputCase	StepType	M2	M3	FrameElem	ElemStation
	m			KN-m	KN-m		m
42	2.36702	SLU 6-NL	Max	0.	-449.2188	42-5	0.4734
42	2.36702	SLU 6-NL	Max	0.	-449.2188	42-6	0.
42	2.84042	SLU 6-NL	Max	0.	-527.4794	42-6	0.4734
42	0.	SLU 6-NL	Min	0.	-326.8382	42-1	0.
42	0.4734	SLU 6-NL	Min	0.	-311.4181	42-1	0.4734
42	0.4734	SLU 6-NL	Min	0.	-311.4181	42-2	0.
42	0.94681	SLU 6-NL	Min	0.	-317.1571	42-2	0.4734
42	0.94681	SLU 6-NL	Min	0.	-317.1571	42-3	0.
42	1.42021	SLU 6-NL	Min	0.	-342.8449	42-3	0.4734
42	1.42021	SLU 6-NL	Min	0.	-342.8449	42-4	0.
42	1.89361	SLU 6-NL	Min	0.	-387.2697	42-4	0.4734
42	1.89361	SLU 6-NL	Min	0.	-387.2697	42-5	0.
42	2.36702	SLU 6-NL	Min	0.	-449.2188	42-5	0.4734
42	2.36702	SLU 6-NL	Min	0.	-449.2188	42-6	0.
42	2.84042	SLU 6-NL	Min	0.	-527.4794	42-6	0.4734
42	0.	SLU 7-NL	Max	0.	-26.7021	42-1	0.
42	0.4734	SLU 7-NL	Max	0.	-11.1874	42-1	0.4734
42	0.4734	SLU 7-NL	Max	0.	-11.1874	42-2	0.
42	0.94681	SLU 7-NL	Max	0.	-16.8447	42-2	0.4734
42	0.94681	SLU 7-NL	Max	0.	-16.8447	42-3	0.
42	1.42021	SLU 7-NL	Max	0.	-42.4601	42-3	0.4734
42	1.42021	SLU 7-NL	Max	0.	-42.4601	42-4	0.
42	1.89361	SLU 7-NL	Max	0.	-86.8191	42-4	0.4734
42	1.89361	SLU 7-NL	Max	0.	-86.8191	42-5	0.
42	2.36702	SLU 7-NL	Max	0.	-148.7076	42-5	0.4734
42	2.36702	SLU 7-NL	Max	0.	-148.7076	42-6	0.
42	2.84042	SLU 7-NL	Max	0.	-226.9113	42-6	0.4734
42	0.	SLU 7-NL	Min	0.	-26.7021	42-1	0.
42	0.4734	SLU 7-NL	Min	0.	-11.1874	42-1	0.4734
42	0.4734	SLU 7-NL	Min	0.	-11.1874	42-2	0.
42	0.94681	SLU 7-NL	Min	0.	-16.8447	42-2	0.4734
42	0.94681	SLU 7-NL	Min	0.	-16.8447	42-3	0.
42	1.42021	SLU 7-NL	Min	0.	-42.4601	42-3	0.4734
42	1.42021	SLU 7-NL	Min	0.	-42.4601	42-4	0.
42	1.89361	SLU 7-NL	Min	0.	-86.8191	42-4	0.4734
42	1.89361	SLU 7-NL	Min	0.	-86.8191	42-5	0.
42	2.36702	SLU 7-NL	Min	0.	-148.7076	42-5	0.4734
42	2.36702	SLU 7-NL	Min	0.	-148.7076	42-6	0.
42	2.84042	SLU 7-NL	Min	0.	-226.9113	42-6	0.4734
42	0.	SLE-C-NL	Max	0.	-234.3733	42-1	0.
42	0.4734	SLE-C-NL	Max	0.	-224.4858	42-1	0.4734
42	0.4734	SLE-C-NL	Max	0.	-224.4625	42-2	0.
42	0.94681	SLE-C-NL	Max	0.	-231.2481	42-2	0.4734
42	0.94681	SLE-C-NL	Max	0.	-231.2258	42-3	0.
42	1.42021	SLE-C-NL	Max	0.	-253.7258	42-3	0.4734
42	1.42021	SLE-C-NL	Max	0.	-253.7049	42-4	0.
42	1.89361	SLE-C-NL	Max	0.	-290.9427	42-4	0.4734
42	1.89361	SLE-C-NL	Max	0.	-290.9238	42-5	0.
42	2.36702	SLE-C-NL	Max	0.	-341.9074	42-5	0.4734
42	2.36702	SLE-C-NL	Max	0.	-341.891	42-6	0.
42	2.84042	SLE-C-NL	Max	0.	-405.6145	42-6	0.4734
42	0.	SLE-C-NL	Min	0.	-234.3733	42-1	0.
42	0.4734	SLE-C-NL	Min	0.	-224.4858	42-1	0.4734
42	0.4734	SLE-C-NL	Min	0.	-224.4625	42-2	0.

Table: Element Forces - Frames, Part 2 of 2

Frame	Station	OutputCase	StepType	M2	M3	FrameElem	ElemStation
	m			KN-m	KN-m		m
42	0.94681	SLE-C-NL	Min	0.	-231.2481	42-2	0.4734
42	0.94681	SLE-C-NL	Min	0.	-231.2258	42-3	0.
42	1.42021	SLE-C-NL	Min	0.	-253.7258	42-3	0.4734
42	1.42021	SLE-C-NL	Min	0.	-253.7049	42-4	0.
42	1.89361	SLE-C-NL	Min	0.	-290.9427	42-4	0.4734
42	1.89361	SLE-C-NL	Min	0.	-290.9238	42-5	0.
42	2.36702	SLE-C-NL	Min	0.	-341.9074	42-5	0.4734
42	2.36702	SLE-C-NL	Min	0.	-341.891	42-6	0.
42	2.84042	SLE-C-NL	Min	0.	-405.6145	42-6	0.4734
42	0.	SLE-F-1-NL	Max	0.	-260.8988	42-1	0.
42	0.4734	SLE-F-1-NL	Max	0.	-251.9293	42-1	0.4734
42	0.4734	SLE-F-1-NL	Max	0.	-251.9043	42-2	0.
42	0.94681	SLE-F-1-NL	Max	0.	-257.7657	42-2	0.4734
42	0.94681	SLE-F-1-NL	Max	0.	-257.7417	42-3	0.
42	1.42021	SLE-F-1-NL	Max	0.	-277.4729	42-3	0.4734
42	1.42021	SLE-F-1-NL	Max	0.	-277.4505	42-4	0.
42	1.89361	SLE-F-1-NL	Max	0.	-310.0701	42-4	0.4734
42	1.89361	SLE-F-1-NL	Max	0.	-310.0498	42-5	0.
42	2.36702	SLE-F-1-NL	Max	0.	-354.5592	42-5	0.4734
42	2.36702	SLE-F-1-NL	Max	0.	-354.5415	42-6	0.
42	2.84042	SLE-F-1-NL	Max	0.	-409.9271	42-6	0.4734
42	0.	SLE-F-1-NL	Min	0.	-260.8988	42-1	0.
42	0.4734	SLE-F-1-NL	Min	0.	-251.9293	42-1	0.4734
42	0.4734	SLE-F-1-NL	Min	0.	-251.9043	42-2	0.
42	0.94681	SLE-F-1-NL	Min	0.	-257.7657	42-2	0.4734
42	0.94681	SLE-F-1-NL	Min	0.	-257.7417	42-3	0.
42	1.42021	SLE-F-1-NL	Min	0.	-277.4729	42-3	0.4734
42	1.42021	SLE-F-1-NL	Min	0.	-277.4505	42-4	0.
42	1.89361	SLE-F-1-NL	Min	0.	-310.0701	42-4	0.4734
42	1.89361	SLE-F-1-NL	Min	0.	-310.0498	42-5	0.
42	2.36702	SLE-F-1-NL	Min	0.	-354.5592	42-5	0.4734
42	2.36702	SLE-F-1-NL	Min	0.	-354.5415	42-6	0.
42	2.84042	SLE-F-1-NL	Min	0.	-409.9271	42-6	0.4734
42	0.	SLE-F-2-NL	Max	0.	-159.8571	42-1	0.
42	0.4734	SLE-F-2-NL	Max	0.	-149.1769	42-1	0.4734
42	0.4734	SLE-F-2-NL	Max	0.	-149.1129	42-2	0.
42	0.94681	SLE-F-2-NL	Max	0.	-154.6061	42-2	0.4734
42	0.94681	SLE-F-2-NL	Max	0.	-154.5399	42-3	0.
42	1.42021	SLE-F-2-NL	Max	0.	-175.3465	42-3	0.4734
42	1.42021	SLE-F-2-NL	Max	0.	-175.2783	42-4	0.
42	1.89361	SLE-F-2-NL	Max	0.	-210.5269	42-4	0.4734
42	1.89361	SLE-F-2-NL	Max	0.	-210.4572	42-5	0.
42	2.36702	SLE-F-2-NL	Max	0.	-259.2662	42-5	0.4734
42	2.36702	SLE-F-2-NL	Max	0.	-259.1952	42-6	0.
42	2.84042	SLE-F-2-NL	Max	0.	-320.6734	42-6	0.4734
42	0.	SLE-F-2-NL	Min	0.	-159.8571	42-1	0.
42	0.4734	SLE-F-2-NL	Min	0.	-149.1769	42-1	0.4734
42	0.4734	SLE-F-2-NL	Min	0.	-149.1129	42-2	0.
42	0.94681	SLE-F-2-NL	Min	0.	-154.6061	42-2	0.4734
42	0.94681	SLE-F-2-NL	Min	0.	-154.5399	42-3	0.
42	1.42021	SLE-F-2-NL	Min	0.	-175.3465	42-3	0.4734
42	1.42021	SLE-F-2-NL	Min	0.	-175.2783	42-4	0.
42	1.89361	SLE-F-2-NL	Min	0.	-210.5269	42-4	0.4734
42	1.89361	SLE-F-2-NL	Min	0.	-210.4572	42-5	0.

Table: Element Forces - Frames, Part 2 of 2

Frame	Station	OutputCase	StepType	M2	M3	FrameElem	ElemStation
	m			KN-m	KN-m		m
42	2.36702	SLE-F-2-NL	Min	0.	-259.2662	42-5	0.4734
42	2.36702	SLE-F-2-NL	Min	0.	-259.1952	42-6	0.
42	2.84042	SLE-F-2-NL	Min	0.	-320.6734	42-6	0.4734
42	0.	SLE-F-3-NL	Max	0.	-165.4135	42-1	0.
42	0.4734	SLE-F-3-NL	Max	0.	-153.073	42-1	0.4734
42	0.4734	SLE-F-3-NL	Max	0.	-153.073	42-2	0.
42	0.94681	SLE-F-3-NL	Max	0.	-156.3385	42-2	0.4734
42	0.94681	SLE-F-3-NL	Max	0.	-156.3385	42-3	0.
42	1.42021	SLE-F-3-NL	Max	0.	-174.2775	42-3	0.4734
42	1.42021	SLE-F-3-NL	Max	0.	-174.2775	42-4	0.
42	1.89361	SLE-F-3-NL	Max	0.	-205.9566	42-4	0.4734
42	1.89361	SLE-F-3-NL	Max	0.	-205.9566	42-5	0.
42	2.36702	SLE-F-3-NL	Max	0.	-250.4425	42-5	0.4734
42	2.36702	SLE-F-3-NL	Max	0.	-250.4425	42-6	0.
42	2.84042	SLE-F-3-NL	Max	0.	-306.8015	42-6	0.4734
42	0.	SLE-F-3-NL	Min	0.	-165.4135	42-1	0.
42	0.4734	SLE-F-3-NL	Min	0.	-153.073	42-1	0.4734
42	0.4734	SLE-F-3-NL	Min	0.	-153.073	42-2	0.
42	0.94681	SLE-F-3-NL	Min	0.	-156.3385	42-2	0.4734
42	0.94681	SLE-F-3-NL	Min	0.	-156.3385	42-3	0.
42	1.42021	SLE-F-3-NL	Min	0.	-174.2775	42-3	0.4734
42	1.42021	SLE-F-3-NL	Min	0.	-174.2775	42-4	0.
42	1.89361	SLE-F-3-NL	Min	0.	-205.9566	42-4	0.4734
42	1.89361	SLE-F-3-NL	Min	0.	-205.9566	42-5	0.
42	2.36702	SLE-F-3-NL	Min	0.	-250.4425	42-5	0.4734
42	2.36702	SLE-F-3-NL	Min	0.	-250.4425	42-6	0.
42	2.84042	SLE-F-3-NL	Min	0.	-306.8015	42-6	0.4734
42	0.	SLE-QP-NL	Max	0.	-192.1599	42-1	0.
42	0.4734	SLE-QP-NL	Max	0.	-181.757	42-1	0.4734
42	0.4734	SLE-QP-NL	Max	0.	-181.7399	42-2	0.
42	0.94681	SLE-QP-NL	Max	0.	-185.9776	42-2	0.4734
42	0.94681	SLE-QP-NL	Max	0.	-185.9613	42-3	0.
42	1.42021	SLE-QP-NL	Max	0.	-203.884	42-3	0.4734
42	1.42021	SLE-QP-NL	Max	0.	-203.8687	42-4	0.
42	1.89361	SLE-QP-NL	Max	0.	-234.5067	42-4	0.4734
42	1.89361	SLE-QP-NL	Max	0.	-234.4929	42-5	0.
42	2.36702	SLE-QP-NL	Max	0.	-276.8643	42-5	0.4734
42	2.36702	SLE-QP-NL	Max	0.	-276.8523	42-6	0.
42	2.84042	SLE-QP-NL	Max	0.	-329.9639	42-6	0.4734
42	0.	SLE-QP-NL	Min	0.	-192.1599	42-1	0.
42	0.4734	SLE-QP-NL	Min	0.	-181.757	42-1	0.4734
42	0.4734	SLE-QP-NL	Min	0.	-181.7399	42-2	0.
42	0.94681	SLE-QP-NL	Min	0.	-185.9776	42-2	0.4734
42	0.94681	SLE-QP-NL	Min	0.	-185.9613	42-3	0.
42	1.42021	SLE-QP-NL	Min	0.	-203.884	42-3	0.4734
42	1.42021	SLE-QP-NL	Min	0.	-203.8687	42-4	0.
42	1.89361	SLE-QP-NL	Min	0.	-234.5067	42-4	0.4734
42	1.89361	SLE-QP-NL	Min	0.	-234.4929	42-5	0.
42	2.36702	SLE-QP-NL	Min	0.	-276.8643	42-5	0.4734
42	2.36702	SLE-QP-NL	Min	0.	-276.8523	42-6	0.
42	2.84042	SLE-QP-NL	Min	0.	-329.9639	42-6	0.4734
42	0.	SLV1-NL	Max	0.	-46.844	42-1	0.
42	0.4734	SLV1-NL	Max	0.	-35.798	42-1	0.4734
42	0.4734	SLV1-NL	Max	0.	-35.5252	42-2	0.

Table: Element Forces - Frames, Part 2 of 2

Frame	Station	OutputCase	StepType	M2	M3	FrameElem	ElemStation
	m			KN-m	KN-m		m
42	0.94681	SLV1-NL	Max	0.	-46.955	42-2	0.4734
42	0.94681	SLV1-NL	Max	0.	-46.6761	42-3	0.
42	1.42021	SLV1-NL	Max	0.	-79.7853	42-3	0.4734
42	1.42021	SLV1-NL	Max	0.	-79.5005	42-4	0.
42	1.89361	SLV1-NL	Max	0.	-133.4911	42-4	0.4734
42	1.89361	SLV1-NL	Max	0.	-133.2005	42-5	0.
42	2.36702	SLV1-NL	Max	0.	-207.2714	42-5	0.4734
42	2.36702	SLV1-NL	Max	0.	-206.9751	42-6	0.
42	2.84042	SLV1-NL	Max	0.	-300.3201	42-6	0.4734
42	0.	SLV1-NL	Min	0.	-46.844	42-1	0.
42	0.4734	SLV1-NL	Min	0.	-35.798	42-1	0.4734
42	0.4734	SLV1-NL	Min	0.	-35.5252	42-2	0.
42	0.94681	SLV1-NL	Min	0.	-46.955	42-2	0.4734
42	0.94681	SLV1-NL	Min	0.	-46.6761	42-3	0.
42	1.42021	SLV1-NL	Min	0.	-79.7853	42-3	0.4734
42	1.42021	SLV1-NL	Min	0.	-79.5005	42-4	0.
42	1.89361	SLV1-NL	Min	0.	-133.4911	42-4	0.4734
42	1.89361	SLV1-NL	Min	0.	-133.2005	42-5	0.
42	2.36702	SLV1-NL	Min	0.	-207.2714	42-5	0.4734
42	2.36702	SLV1-NL	Min	0.	-206.9751	42-6	0.
42	2.84042	SLV1-NL	Min	0.	-300.3201	42-6	0.4734
42	0.	SLV2-NL	Max	0.	-183.9871	42-1	0.
42	0.4734	SLV2-NL	Max	0.	-169.4339	42-1	0.4734
42	0.4734	SLV2-NL	Max	0.	-169.4339	42-2	0.
42	0.94681	SLV2-NL	Max	0.	-169.918	42-2	0.4734
42	0.94681	SLV2-NL	Max	0.	-169.918	42-3	0.
42	1.42021	SLV2-NL	Max	0.	-184.5595	42-3	0.4734
42	1.42021	SLV2-NL	Max	0.	-184.5595	42-4	0.
42	1.89361	SLV2-NL	Max	0.	-212.4778	42-4	0.4734
42	1.89361	SLV2-NL	Max	0.	-212.4778	42-5	0.
42	2.36702	SLV2-NL	Max	0.	-252.7921	42-5	0.4734
42	2.36702	SLV2-NL	Max	0.	-252.7921	42-6	0.
42	2.84042	SLV2-NL	Max	0.	-304.6215	42-6	0.4734
42	0.	SLV2-NL	Min	0.	-183.9871	42-1	0.
42	0.4734	SLV2-NL	Min	0.	-169.4339	42-1	0.4734
42	0.4734	SLV2-NL	Min	0.	-169.4339	42-2	0.
42	0.94681	SLV2-NL	Min	0.	-169.918	42-2	0.4734
42	0.94681	SLV2-NL	Min	0.	-169.918	42-3	0.
42	1.42021	SLV2-NL	Min	0.	-184.5595	42-3	0.4734
42	1.42021	SLV2-NL	Min	0.	-184.5595	42-4	0.
42	1.89361	SLV2-NL	Min	0.	-212.4778	42-4	0.4734
42	1.89361	SLV2-NL	Min	0.	-212.4778	42-5	0.
42	2.36702	SLV2-NL	Min	0.	-252.7921	42-5	0.4734
42	2.36702	SLV2-NL	Min	0.	-252.7921	42-6	0.
42	2.84042	SLV2-NL	Min	0.	-304.6215	42-6	0.4734
42	0.	SLV3-NL	Max	0.	-48.917	42-1	0.
42	0.4734	SLV3-NL	Max	0.	-38.4541	42-1	0.4734
42	0.4734	SLV3-NL	Max	0.	-38.1824	42-2	0.
42	0.94681	SLV3-NL	Max	0.	-50.197	42-2	0.4734
42	0.94681	SLV3-NL	Max	0.	-49.9195	42-3	0.
42	1.42021	SLV3-NL	Max	0.	-83.6154	42-3	0.4734
42	1.42021	SLV3-NL	Max	0.	-83.3319	42-4	0.
42	1.89361	SLV3-NL	Max	0.	-137.9109	42-4	0.4734
42	1.89361	SLV3-NL	Max	0.	-137.6216	42-5	0.

Table: Element Forces - Frames, Part 2 of 2

Frame	Station	OutputCase	StepType	M2	M3	FrameElem	ElemStation
	m			KN-m	KN-m		m
42	2.36702	SLV3-NL	Max	0.	-212.2821	42-5	0.4734
42	2.36702	SLV3-NL	Max	0.	-211.9872	42-6	0.
42	2.84042	SLV3-NL	Max	0.	-305.9223	42-6	0.4734
42	0.	SLV3-NL	Min	0.	-48.917	42-1	0.
42	0.4734	SLV3-NL	Min	0.	-38.4541	42-1	0.4734
42	0.4734	SLV3-NL	Min	0.	-38.1824	42-2	0.
42	0.94681	SLV3-NL	Min	0.	-50.197	42-2	0.4734
42	0.94681	SLV3-NL	Min	0.	-49.9195	42-3	0.
42	1.42021	SLV3-NL	Min	0.	-83.6154	42-3	0.4734
42	1.42021	SLV3-NL	Min	0.	-83.3319	42-4	0.
42	1.89361	SLV3-NL	Min	0.	-137.9109	42-4	0.4734
42	1.89361	SLV3-NL	Min	0.	-137.6216	42-5	0.
42	2.36702	SLV3-NL	Min	0.	-212.2821	42-5	0.4734
42	2.36702	SLV3-NL	Min	0.	-211.9872	42-6	0.
42	2.84042	SLV3-NL	Min	0.	-305.9223	42-6	0.4734
42	0.	SLV4-NL	Max	0.	-186.0721	42-1	0.
42	0.4734	SLV4-NL	Max	0.	-172.1087	42-1	0.4734
42	0.4734	SLV4-NL	Max	0.	-172.1087	42-2	0.
42	0.94681	SLV4-NL	Max	0.	-173.1823	42-2	0.4734
42	0.94681	SLV4-NL	Max	0.	-173.1823	42-3	0.
42	1.42021	SLV4-NL	Max	0.	-188.4132	42-3	0.4734
42	1.42021	SLV4-NL	Max	0.	-188.4132	42-4	0.
42	1.89361	SLV4-NL	Max	0.	-216.9208	42-4	0.4734
42	1.89361	SLV4-NL	Max	0.	-216.9208	42-5	0.
42	2.36702	SLV4-NL	Max	0.	-257.8243	42-5	0.4734
42	2.36702	SLV4-NL	Max	0.	-257.8243	42-6	0.
42	2.84042	SLV4-NL	Max	0.	-310.2426	42-6	0.4734
42	0.	SLV4-NL	Min	0.	-186.0721	42-1	0.
42	0.4734	SLV4-NL	Min	0.	-172.1087	42-1	0.4734
42	0.4734	SLV4-NL	Min	0.	-172.1087	42-2	0.
42	0.94681	SLV4-NL	Min	0.	-173.1823	42-2	0.4734
42	0.94681	SLV4-NL	Min	0.	-173.1823	42-3	0.
42	1.42021	SLV4-NL	Min	0.	-188.4132	42-3	0.4734
42	1.42021	SLV4-NL	Min	0.	-188.4132	42-4	0.
42	1.89361	SLV4-NL	Min	0.	-216.9208	42-4	0.4734
42	1.89361	SLV4-NL	Min	0.	-216.9208	42-5	0.
42	2.36702	SLV4-NL	Min	0.	-257.8243	42-5	0.4734
42	2.36702	SLV4-NL	Min	0.	-257.8243	42-6	0.
42	2.84042	SLV4-NL	Min	0.	-310.2426	42-6	0.4734
42	0.	SLV5-NL	Max	0.	-158.5671	42-1	0.
42	0.4734	SLV5-NL	Max	0.	-147.2088	42-1	0.4734
42	0.4734	SLV5-NL	Max	0.	-147.1248	42-2	0.
42	0.94681	SLV5-NL	Max	0.	-152.7304	42-2	0.4734
42	0.94681	SLV5-NL	Max	0.	-152.6452	42-3	0.
42	1.42021	SLV5-NL	Max	0.	-174.3041	42-3	0.4734
42	1.42021	SLV5-NL	Max	0.	-174.218	42-4	0.
42	1.89361	SLV5-NL	Max	0.	-211.0086	42-4	0.4734
42	1.89361	SLV5-NL	Max	0.	-210.922	42-5	0.
42	2.36702	SLV5-NL	Max	0.	-261.9126	42-5	0.4734
42	2.36702	SLV5-NL	Max	0.	-261.8258	42-6	0.
42	2.84042	SLV5-NL	Max	0.	-326.0751	42-6	0.4734
42	0.	SLV5-NL	Min	0.	-158.5671	42-1	0.
42	0.4734	SLV5-NL	Min	0.	-147.2088	42-1	0.4734
42	0.4734	SLV5-NL	Min	0.	-147.1248	42-2	0.

Table: Element Forces - Frames, Part 2 of 2

Frame	Station	OutputCase	StepType	M2	M3	FrameElem	ElemStation
	m			KN-m	KN-m		m
42	0.94681	SLV5-NL	Min	0.	-152.7304	42-2	0.4734
42	0.94681	SLV5-NL	Min	0.	-152.6452	42-3	0.
42	1.42021	SLV5-NL	Min	0.	-174.3041	42-3	0.4734
42	1.42021	SLV5-NL	Min	0.	-174.218	42-4	0.
42	1.89361	SLV5-NL	Min	0.	-211.0086	42-4	0.4734
42	1.89361	SLV5-NL	Min	0.	-210.922	42-5	0.
42	2.36702	SLV5-NL	Min	0.	-261.9126	42-5	0.4734
42	2.36702	SLV5-NL	Min	0.	-261.8258	42-6	0.
42	2.84042	SLV5-NL	Min	0.	-326.0751	42-6	0.4734
42	0.	SLV6-NL	Max	0.	-200.4604	42-1	0.
42	0.4734	SLV6-NL	Max	0.	-188.2243	42-1	0.4734
42	0.4734	SLV6-NL	Max	0.	-188.2243	42-2	0.
42	0.94681	SLV6-NL	Max	0.	-190.6201	42-2	0.4734
42	0.94681	SLV6-NL	Max	0.	-190.6201	42-3	0.
42	1.42021	SLV6-NL	Max	0.	-206.7313	42-3	0.4734
42	1.42021	SLV6-NL	Max	0.	-206.7313	42-4	0.
42	1.89361	SLV6-NL	Max	0.	-235.6406	42-4	0.4734
42	1.89361	SLV6-NL	Max	0.	-235.6406	42-5	0.
42	2.36702	SLV6-NL	Max	0.	-276.4306	42-5	0.4734
42	2.36702	SLV6-NL	Max	0.	-276.4306	42-6	0.
42	2.84042	SLV6-NL	Max	0.	-328.1835	42-6	0.4734
42	0.	SLV6-NL	Min	0.	-200.4604	42-1	0.
42	0.4734	SLV6-NL	Min	0.	-188.2243	42-1	0.4734
42	0.4734	SLV6-NL	Min	0.	-188.2243	42-2	0.
42	0.94681	SLV6-NL	Min	0.	-190.6201	42-2	0.4734
42	0.94681	SLV6-NL	Min	0.	-190.6201	42-3	0.
42	1.42021	SLV6-NL	Min	0.	-206.7313	42-3	0.4734
42	1.42021	SLV6-NL	Min	0.	-206.7313	42-4	0.
42	1.89361	SLV6-NL	Min	0.	-235.6406	42-4	0.4734
42	1.89361	SLV6-NL	Min	0.	-235.6406	42-5	0.
42	2.36702	SLV6-NL	Min	0.	-276.4306	42-5	0.4734
42	2.36702	SLV6-NL	Min	0.	-276.4306	42-6	0.
42	2.84042	SLV6-NL	Min	0.	-328.1835	42-6	0.4734
42	0.	SLV7-NL	Max	0.	-165.477	42-1	0.
42	0.4734	SLV7-NL	Max	0.	-156.0635	42-1	0.4734
42	0.4734	SLV7-NL	Max	0.	-155.9807	42-2	0.
42	0.94681	SLV7-NL	Max	0.	-163.537	42-2	0.4734
42	0.94681	SLV7-NL	Max	0.	-163.4529	42-3	0.
42	1.42021	SLV7-NL	Max	0.	-187.0686	42-3	0.4734
42	1.42021	SLV7-NL	Max	0.	-186.9837	42-4	0.
42	1.89361	SLV7-NL	Max	0.	-225.7363	42-4	0.4734
42	1.89361	SLV7-NL	Max	0.	-225.651	42-5	0.
42	2.36702	SLV7-NL	Max	0.	-278.6074	42-5	0.4734
42	2.36702	SLV7-NL	Max	0.	-278.5218	42-6	0.
42	2.84042	SLV7-NL	Max	0.	-344.7382	42-6	0.4734
42	0.	SLV7-NL	Min	0.	-165.477	42-1	0.
42	0.4734	SLV7-NL	Min	0.	-156.0635	42-1	0.4734
42	0.4734	SLV7-NL	Min	0.	-155.9807	42-2	0.
42	0.94681	SLV7-NL	Min	0.	-163.537	42-2	0.4734
42	0.94681	SLV7-NL	Min	0.	-163.4529	42-3	0.
42	1.42021	SLV7-NL	Min	0.	-187.0686	42-3	0.4734
42	1.42021	SLV7-NL	Min	0.	-186.9837	42-4	0.
42	1.89361	SLV7-NL	Min	0.	-225.7363	42-4	0.4734
42	1.89361	SLV7-NL	Min	0.	-225.651	42-5	0.

Table: Element Forces - Frames, Part 2 of 2

Frame	Station	OutputCase	StepType	M2	M3	FrameElem	ElemStation
	m			KN-m	KN-m		m
42	2.36702	SLV7-NL	Min	0.	-278.6074	42-5	0.4734
42	2.36702	SLV7-NL	Min	0.	-278.5218	42-6	0.
42	2.84042	SLV7-NL	Min	0.	-344.7382	42-6	0.4734
42	0.	SLV8-NL	Max	0.	-207.4071	42-1	0.
42	0.4734	SLV8-NL	Max	0.	-197.1383	42-1	0.4734
42	0.4734	SLV8-NL	Max	0.	-197.1383	42-2	0.
42	0.94681	SLV8-NL	Max	0.	-201.501	42-2	0.4734
42	0.94681	SLV8-NL	Max	0.	-201.501	42-3	0.
42	1.42021	SLV8-NL	Max	0.	-219.5787	42-3	0.4734
42	1.42021	SLV8-NL	Max	0.	-219.5787	42-4	0.
42	1.89361	SLV8-NL	Max	0.	-250.4542	42-4	0.4734
42	1.89361	SLV8-NL	Max	0.	-250.4542	42-5	0.
42	2.36702	SLV8-NL	Max	0.	-293.2099	42-5	0.4734
42	2.36702	SLV8-NL	Max	0.	-293.2099	42-6	0.
42	2.84042	SLV8-NL	Max	0.	-346.9282	42-6	0.4734
42	0.	SLV8-NL	Min	0.	-207.4071	42-1	0.
42	0.4734	SLV8-NL	Min	0.	-197.1383	42-1	0.4734
42	0.4734	SLV8-NL	Min	0.	-197.1383	42-2	0.
42	0.94681	SLV8-NL	Min	0.	-201.501	42-2	0.4734
42	0.94681	SLV8-NL	Min	0.	-201.501	42-3	0.
42	1.42021	SLV8-NL	Min	0.	-219.5787	42-3	0.4734
42	1.42021	SLV8-NL	Min	0.	-219.5787	42-4	0.
42	1.89361	SLV8-NL	Min	0.	-250.4542	42-4	0.4734
42	1.89361	SLV8-NL	Min	0.	-250.4542	42-5	0.
42	2.36702	SLV8-NL	Min	0.	-293.2099	42-5	0.4734
42	2.36702	SLV8-NL	Min	0.	-293.2099	42-6	0.
42	2.84042	SLV8-NL	Min	0.	-346.9282	42-6	0.4734
42	0.	SLV9-NL	Max	0.	-118.4002	42-1	0.
42	0.4734	SLV9-NL	Max	0.	-107.0894	42-1	0.4734
42	0.4734	SLV9-NL	Max	0.	-106.9908	42-2	0.
42	0.94681	SLV9-NL	Max	0.	-113.8938	42-2	0.4734
42	0.94681	SLV9-NL	Max	0.	-113.7915	42-3	0.
42	1.42021	SLV9-NL	Max	0.	-138.1496	42-3	0.4734
42	1.42021	SLV9-NL	Max	0.	-138.0437	42-4	0.
42	1.89361	SLV9-NL	Max	0.	-179.0903	42-4	0.4734
42	1.89361	SLV9-NL	Max	0.	-178.9812	42-5	0.
42	2.36702	SLV9-NL	Max	0.	-235.9423	42-5	0.4734
42	2.36702	SLV9-NL	Max	0.	-235.8301	42-6	0.
42	2.84042	SLV9-NL	Max	0.	-307.9238	42-6	0.4734
42	0.	SLV9-NL	Min	0.	-118.4002	42-1	0.
42	0.4734	SLV9-NL	Min	0.	-107.0894	42-1	0.4734
42	0.4734	SLV9-NL	Min	0.	-106.9908	42-2	0.
42	0.94681	SLV9-NL	Min	0.	-113.8938	42-2	0.4734
42	0.94681	SLV9-NL	Min	0.	-113.7915	42-3	0.
42	1.42021	SLV9-NL	Min	0.	-138.1496	42-3	0.4734
42	1.42021	SLV9-NL	Min	0.	-138.0437	42-4	0.
42	1.89361	SLV9-NL	Min	0.	-179.0903	42-4	0.4734
42	1.89361	SLV9-NL	Min	0.	-178.9812	42-5	0.
42	2.36702	SLV9-NL	Min	0.	-235.9423	42-5	0.4734
42	2.36702	SLV9-NL	Min	0.	-235.8301	42-6	0.
42	2.84042	SLV9-NL	Min	0.	-307.9238	42-6	0.4734
42	0.	SLV10-NL	Max	0.	-222.1165	42-1	0.
42	0.4734	SLV10-NL	Max	0.	-211.1955	42-1	0.4734
42	0.4734	SLV10-NL	Max	0.	-211.1955	42-2	0.

Table: Element Forces - Frames, Part 2 of 2

Frame	Station	OutputCase	StepType	M2	M3	FrameElem	ElemStation
	m			KN-m	KN-m		m
42	0.94681	SLV10-NL	Max	0.	-214.1566	42-2	0.4734
42	0.94681	SLV10-NL	Max	0.	-214.1566	42-3	0.
42	1.42021	SLV10-NL	Max	0.	-230.0153	42-3	0.4734
42	1.42021	SLV10-NL	Max	0.	-230.0153	42-4	0.
42	1.89361	SLV10-NL	Max	0.	-257.7864	42-4	0.4734
42	1.89361	SLV10-NL	Max	0.	-257.7864	42-5	0.
42	2.36702	SLV10-NL	Max	0.	-296.4843	42-5	0.4734
42	2.36702	SLV10-NL	Max	0.	-296.4843	42-6	0.
42	2.84042	SLV10-NL	Max	0.	-345.1234	42-6	0.4734
42	0.	SLV10-NL	Min	0.	-222.1165	42-1	0.
42	0.4734	SLV10-NL	Min	0.	-211.1955	42-1	0.4734
42	0.4734	SLV10-NL	Min	0.	-211.1955	42-2	0.
42	0.94681	SLV10-NL	Min	0.	-214.1566	42-2	0.4734
42	0.94681	SLV10-NL	Min	0.	-214.1566	42-3	0.
42	1.42021	SLV10-NL	Min	0.	-230.0153	42-3	0.4734
42	1.42021	SLV10-NL	Min	0.	-230.0153	42-4	0.
42	1.89361	SLV10-NL	Min	0.	-257.7864	42-4	0.4734
42	1.89361	SLV10-NL	Min	0.	-257.7864	42-5	0.
42	2.36702	SLV10-NL	Min	0.	-296.4843	42-5	0.4734
42	2.36702	SLV10-NL	Min	0.	-296.4843	42-6	0.
42	2.84042	SLV10-NL	Min	0.	-345.1234	42-6	0.4734
42	0.	SLV11-NL	Max	0.	-133.399	42-1	0.
42	0.4734	SLV11-NL	Max	0.	-121.8509	42-1	0.4734
42	0.4734	SLV11-NL	Max	0.	-121.7493	42-2	0.
42	0.94681	SLV11-NL	Max	0.	-128.4251	42-2	0.4734
42	0.94681	SLV11-NL	Max	0.	-128.3198	42-3	0.
42	1.42021	SLV11-NL	Max	0.	-152.4589	42-3	0.4734
42	1.42021	SLV11-NL	Max	0.	-152.3501	42-4	0.
42	1.89361	SLV11-NL	Max	0.	-193.1831	42-4	0.4734
42	1.89361	SLV11-NL	Max	0.	-193.071	42-5	0.
42	2.36702	SLV11-NL	Max	0.	-249.8199	42-5	0.4734
42	2.36702	SLV11-NL	Max	0.	-249.7048	42-6	0.
42	2.84042	SLV11-NL	Max	0.	-321.5831	42-6	0.4734
42	0.	SLV11-NL	Min	0.	-133.399	42-1	0.
42	0.4734	SLV11-NL	Min	0.	-121.8509	42-1	0.4734
42	0.4734	SLV11-NL	Min	0.	-121.7493	42-2	0.
42	0.94681	SLV11-NL	Min	0.	-128.4251	42-2	0.4734
42	0.94681	SLV11-NL	Min	0.	-128.3198	42-3	0.
42	1.42021	SLV11-NL	Min	0.	-152.4589	42-3	0.4734
42	1.42021	SLV11-NL	Min	0.	-152.3501	42-4	0.
42	1.89361	SLV11-NL	Min	0.	-193.1831	42-4	0.4734
42	1.89361	SLV11-NL	Min	0.	-193.071	42-5	0.
42	2.36702	SLV11-NL	Min	0.	-249.8199	42-5	0.4734
42	2.36702	SLV11-NL	Min	0.	-249.7048	42-6	0.
42	2.84042	SLV11-NL	Min	0.	-321.5831	42-6	0.4734
42	0.	SLV12-NL	Max	0.	-237.1894	42-1	0.
42	0.4734	SLV12-NL	Max	0.	-226.0485	42-1	0.4734
42	0.4734	SLV12-NL	Max	0.	-226.0485	42-2	0.
42	0.94681	SLV12-NL	Max	0.	-228.789	42-2	0.4734
42	0.94681	SLV12-NL	Max	0.	-228.789	42-3	0.
42	1.42021	SLV12-NL	Max	0.	-244.4268	42-3	0.4734
42	1.42021	SLV12-NL	Max	0.	-244.4268	42-4	0.
42	1.89361	SLV12-NL	Max	0.	-271.9767	42-4	0.4734
42	1.89361	SLV12-NL	Max	0.	-271.9767	42-5	0.

Table: Element Forces - Frames, Part 2 of 2

Frame	Station	OutputCase	StepType	M2	M3	FrameElem	ElemStation
	m			KN-m	KN-m		m
42	2.36702	SLV12-NL	Max	0.	-310.4532	42-5	0.4734
42	2.36702	SLV12-NL	Max	0.	-310.4532	42-6	0.
42	2.84042	SLV12-NL	Max	0.	-358.8708	42-6	0.4734
42	0.	SLV12-NL	Min	0.	-237.1894	42-1	0.
42	0.4734	SLV12-NL	Min	0.	-226.0485	42-1	0.4734
42	0.4734	SLV12-NL	Min	0.	-226.0485	42-2	0.
42	0.94681	SLV12-NL	Min	0.	-228.789	42-2	0.4734
42	0.94681	SLV12-NL	Min	0.	-228.789	42-3	0.
42	1.42021	SLV12-NL	Min	0.	-244.4268	42-3	0.4734
42	1.42021	SLV12-NL	Min	0.	-244.4268	42-4	0.
42	1.89361	SLV12-NL	Min	0.	-271.9767	42-4	0.4734
42	1.89361	SLV12-NL	Min	0.	-271.9767	42-5	0.
42	2.36702	SLV12-NL	Min	0.	-310.4532	42-5	0.4734
42	2.36702	SLV12-NL	Min	0.	-310.4532	42-6	0.
42	2.84042	SLV12-NL	Min	0.	-358.8708	42-6	0.4734
42	0.	SLV13-NL	Max	0.	-160.4239	42-1	0.
42	0.4734	SLV13-NL	Max	0.	-150.2323	42-1	0.4734
42	0.4734	SLV13-NL	Max	0.	-150.2015	42-2	0.
42	0.94681	SLV13-NL	Max	0.	-155.683	42-2	0.4734
42	0.94681	SLV13-NL	Max	0.	-155.6515	42-3	0.
42	1.42021	SLV13-NL	Max	0.	-175.9096	42-3	0.4734
42	1.42021	SLV13-NL	Max	0.	-175.8778	42-4	0.
42	1.89361	SLV13-NL	Max	0.	-210.0043	42-4	0.4734
42	1.89361	SLV13-NL	Max	0.	-209.9725	42-5	0.
42	2.36702	SLV13-NL	Max	0.	-257.0493	42-5	0.4734
42	2.36702	SLV13-NL	Max	0.	-257.0179	42-6	0.
42	2.84042	SLV13-NL	Max	0.	-316.1168	42-6	0.4734
42	0.	SLV13-NL	Min	0.	-160.4239	42-1	0.
42	0.4734	SLV13-NL	Min	0.	-150.2323	42-1	0.4734
42	0.4734	SLV13-NL	Min	0.	-150.2015	42-2	0.
42	0.94681	SLV13-NL	Min	0.	-155.683	42-2	0.4734
42	0.94681	SLV13-NL	Min	0.	-155.6515	42-3	0.
42	1.42021	SLV13-NL	Min	0.	-175.9096	42-3	0.4734
42	1.42021	SLV13-NL	Min	0.	-175.8778	42-4	0.
42	1.89361	SLV13-NL	Min	0.	-210.0043	42-4	0.4734
42	1.89361	SLV13-NL	Min	0.	-209.9725	42-5	0.
42	2.36702	SLV13-NL	Min	0.	-257.0493	42-5	0.4734
42	2.36702	SLV13-NL	Min	0.	-257.0179	42-6	0.
42	2.84042	SLV13-NL	Min	0.	-316.1168	42-6	0.4734
42	0.	SLV14-NL	Max	0.	-191.2844	42-1	0.
42	0.4734	SLV14-NL	Max	0.	-181.47	42-1	0.4734
42	0.4734	SLV14-NL	Max	0.	-181.469	42-2	0.
42	0.94681	SLV14-NL	Max	0.	-185.972	42-2	0.4734
42	0.94681	SLV14-NL	Max	0.	-185.972	42-3	0.
42	1.42021	SLV14-NL	Max	0.	-203.8128	42-3	0.4734
42	1.42021	SLV14-NL	Max	0.	-203.8128	42-4	0.
42	1.89361	SLV14-NL	Max	0.	-234.0427	42-4	0.4734
42	1.89361	SLV14-NL	Max	0.	-234.0427	42-5	0.
42	2.36702	SLV14-NL	Max	0.	-275.7127	42-5	0.4734
42	2.36702	SLV14-NL	Max	0.	-275.7127	42-6	0.
42	2.84042	SLV14-NL	Max	0.	-327.8734	42-6	0.4734
42	0.	SLV14-NL	Min	0.	-191.2844	42-1	0.
42	0.4734	SLV14-NL	Min	0.	-181.47	42-1	0.4734
42	0.4734	SLV14-NL	Min	0.	-181.469	42-2	0.

Table: Element Forces - Frames, Part 2 of 2

Frame	Station	OutputCase	StepType	M2	M3	FrameElem	ElemStation
	m			KN-m	KN-m		m
42	0.94681	SLV14-NL	Min	0.	-185.972	42-2	0.4734
42	0.94681	SLV14-NL	Min	0.	-185.972	42-3	0.
42	1.42021	SLV14-NL	Min	0.	-203.8128	42-3	0.4734
42	1.42021	SLV14-NL	Min	0.	-203.8128	42-4	0.
42	1.89361	SLV14-NL	Min	0.	-234.0427	42-4	0.4734
42	1.89361	SLV14-NL	Min	0.	-234.0427	42-5	0.
42	2.36702	SLV14-NL	Min	0.	-275.7127	42-5	0.4734
42	2.36702	SLV14-NL	Min	0.	-275.7127	42-6	0.
42	2.84042	SLV14-NL	Min	0.	-327.8734	42-6	0.4734
42	0.	SLV15-NL	Max	0.	-209.0323	42-1	0.
42	0.4734	SLV15-NL	Max	0.	-198.0383	42-1	0.4734
42	0.4734	SLV15-NL	Max	0.	-198.0016	42-2	0.
42	0.94681	SLV15-NL	Max	0.	-202.7703	42-2	0.4734
42	0.94681	SLV15-NL	Max	0.	-202.7332	42-3	0.
42	1.42021	SLV15-NL	Max	0.	-222.3596	42-3	0.4734
42	1.42021	SLV15-NL	Max	0.	-222.3226	42-4	0.
42	1.89361	SLV15-NL	Max	0.	-255.8862	42-4	0.4734
42	1.89361	SLV15-NL	Max	0.	-255.8497	42-5	0.
42	2.36702	SLV15-NL	Max	0.	-302.4165	42-5	0.4734
42	2.36702	SLV15-NL	Max	0.	-302.381	42-6	0.
42	2.84042	SLV15-NL	Max	0.	-361.005	42-6	0.4734
42	0.	SLV15-NL	Min	0.	-209.0323	42-1	0.
42	0.4734	SLV15-NL	Min	0.	-198.0383	42-1	0.4734
42	0.4734	SLV15-NL	Min	0.	-198.0016	42-2	0.
42	0.94681	SLV15-NL	Min	0.	-202.7703	42-2	0.4734
42	0.94681	SLV15-NL	Min	0.	-202.7332	42-3	0.
42	1.42021	SLV15-NL	Min	0.	-222.3596	42-3	0.4734
42	1.42021	SLV15-NL	Min	0.	-222.3226	42-4	0.
42	1.89361	SLV15-NL	Min	0.	-255.8862	42-4	0.4734
42	1.89361	SLV15-NL	Min	0.	-255.8497	42-5	0.
42	2.36702	SLV15-NL	Min	0.	-302.4165	42-5	0.4734
42	2.36702	SLV15-NL	Min	0.	-302.381	42-6	0.
42	2.84042	SLV15-NL	Min	0.	-361.005	42-6	0.4734
42	0.	SLV16-NL	Max	0.	-239.2956	42-1	0.
42	0.4734	SLV16-NL	Max	0.	-228.7972	42-1	0.4734
42	0.4734	SLV16-NL	Max	0.	-228.7911	42-2	0.
42	0.94681	SLV16-NL	Max	0.	-232.7627	42-2	0.4734
42	0.94681	SLV16-NL	Max	0.	-232.7587	42-3	0.
42	1.42021	SLV16-NL	Max	0.	-250.1895	42-3	0.4734
42	1.42021	SLV16-NL	Max	0.	-250.1881	42-4	0.
42	1.89361	SLV16-NL	Max	0.	-280.049	42-4	0.4734
42	1.89361	SLV16-NL	Max	0.	-280.049	42-5	0.
42	2.36702	SLV16-NL	Max	0.	-321.3492	42-5	0.4734
42	2.36702	SLV16-NL	Max	0.	-321.3492	42-6	0.
42	2.84042	SLV16-NL	Max	0.	-373.1397	42-6	0.4734
42	0.	SLV16-NL	Min	0.	-239.2956	42-1	0.
42	0.4734	SLV16-NL	Min	0.	-228.7972	42-1	0.4734
42	0.4734	SLV16-NL	Min	0.	-228.7911	42-2	0.
42	0.94681	SLV16-NL	Min	0.	-232.7627	42-2	0.4734
42	0.94681	SLV16-NL	Min	0.	-232.7587	42-3	0.
42	1.42021	SLV16-NL	Min	0.	-250.1895	42-3	0.4734
42	1.42021	SLV16-NL	Min	0.	-250.1881	42-4	0.
42	1.89361	SLV16-NL	Min	0.	-280.049	42-4	0.4734
42	1.89361	SLV16-NL	Min	0.	-280.049	42-5	0.

Table: Element Forces - Frames, Part 2 of 2

Frame	Station	OutputCase	StepType	M2	M3	FrameElem	ElemStation
	m			KN-m	KN-m		m
42	2.36702	SLV16-NL	Min	0.	-321.3492	42-5	0.4734
42	2.36702	SLV16-NL	Min	0.	-321.3492	42-6	0.
42	2.84042	SLV16-NL	Min	0.	-373.1397	42-6	0.4734
43	0.	SLU 1-NL	Max	-5.494E-14	-984.2045	43-1	0.
43	0.43006	SLU 1-NL	Max	-3.585E-14	-820.3792	43-1	0.43006
43	0.43006	SLU 1-NL	Max	-4.984E-14	-820.3647	43-2	0.
43	0.86012	SLU 1-NL	Max	-3.353E-14	-680.444	43-2	0.43006
43	0.86012	SLU 1-NL	Max	-4.533E-14	-680.4231	43-3	0.
43	1.29018	SLU 1-NL	Max	-3.173E-14	-563.6811	43-3	0.43006
43	1.29018	SLU 1-NL	Max	-4.158E-14	-563.6548	43-4	0.
43	1.50521	SLU 1-NL	Max	-3.576E-14	-513.8164	43-4	0.21503
43	1.72024	SLU 1-NL	Max	-3.060E-14	-469.3444	43-4	0.43006
43	1.72024	SLU 1-NL	Max	-3.883E-14	-469.3136	43-5	0.
43	2.1503	SLU 1-NL	Max	-3.042E-14	-396.6662	43-5	0.43006
43	2.1503	SLU 1-NL	Max	-3.751E-14	-396.632	43-6	0.
43	2.58036	SLU 1-NL	Max	-3.160E-14	-344.8577	43-6	0.43006
43	2.58036	SLU 1-NL	Max	-3.831E-14	-344.8213	43-7	0.
43	3.01042	SLU 1-NL	Max	-3.487E-14	-313.1074	43-7	0.43006
43	0.	SLU 1-NL	Min	-5.494E-14	-984.2045	43-1	0.
43	0.43006	SLU 1-NL	Min	-3.585E-14	-820.3792	43-1	0.43006
43	0.43006	SLU 1-NL	Min	-4.984E-14	-820.3647	43-2	0.
43	0.86012	SLU 1-NL	Min	-3.353E-14	-680.444	43-2	0.43006
43	0.86012	SLU 1-NL	Min	-4.533E-14	-680.4231	43-3	0.
43	1.29018	SLU 1-NL	Min	-3.173E-14	-563.6811	43-3	0.43006
43	1.29018	SLU 1-NL	Min	-4.158E-14	-563.6548	43-4	0.
43	1.50521	SLU 1-NL	Min	-3.576E-14	-513.8164	43-4	0.21503
43	1.72024	SLU 1-NL	Min	-3.060E-14	-469.3444	43-4	0.43006
43	1.72024	SLU 1-NL	Min	-3.883E-14	-469.3136	43-5	0.
43	2.1503	SLU 1-NL	Min	-3.042E-14	-396.6662	43-5	0.43006
43	2.1503	SLU 1-NL	Min	-3.751E-14	-396.632	43-6	0.
43	2.58036	SLU 1-NL	Min	-3.160E-14	-344.8577	43-6	0.43006
43	2.58036	SLU 1-NL	Min	-3.831E-14	-344.8213	43-7	0.
43	3.01042	SLU 1-NL	Min	-3.487E-14	-313.1074	43-7	0.43006
43	0.	SLU 2-NL	Max	-5.216E-14	-961.3192	43-1	0.
43	0.43006	SLU 2-NL	Max	-3.862E-14	-844.4718	43-1	0.43006
43	0.43006	SLU 2-NL	Max	-4.988E-14	-844.4511	43-2	0.
43	0.86012	SLU 2-NL	Max	-3.831E-14	-744.3613	43-2	0.43006
43	0.86012	SLU 2-NL	Max	-4.830E-14	-744.3316	43-3	0.
43	1.29018	SLU 2-NL	Max	-3.865E-14	-660.5226	43-3	0.43006
43	1.29018	SLU 2-NL	Max	-4.764E-14	-660.4851	43-4	0.
43	1.50521	SLU 2-NL	Max	-4.352E-14	-624.6345	43-4	0.21503
43	1.72024	SLU 2-NL	Max	-3.986E-14	-592.456	43-4	0.43006
43	1.72024	SLU 2-NL	Max	-4.822E-14	-592.4118	43-5	0.
43	2.1503	SLU 2-NL	Max	-4.228E-14	-539.6361	43-5	0.43006
43	2.1503	SLU 2-NL	Max	-5.058E-14	-539.5867	43-6	0.
43	2.58036	SLU 2-NL	Max	-4.647E-14	-501.5097	43-6	0.43006
43	2.58036	SLU 2-NL	Max	-5.562E-14	-501.4565	43-7	0.
43	3.01042	SLU 2-NL	Max	-5.333E-14	-477.4915	43-7	0.43006
43	0.	SLU 2-NL	Min	-5.216E-14	-961.3192	43-1	0.
43	0.43006	SLU 2-NL	Min	-3.862E-14	-844.4718	43-1	0.43006
43	0.43006	SLU 2-NL	Min	-4.988E-14	-844.4511	43-2	0.
43	0.86012	SLU 2-NL	Min	-3.831E-14	-744.3613	43-2	0.43006
43	0.86012	SLU 2-NL	Min	-4.830E-14	-744.3316	43-3	0.
43	1.29018	SLU 2-NL	Min	-3.865E-14	-660.5226	43-3	0.43006

Table: Element Forces - Frames, Part 2 of 2

Frame	Station	OutputCase	StepType	M2	M3	FrameElem	ElemStation
	m			KN-m	KN-m		m
43	1.29018	SLU 2-NL	Min	-4.764E-14	-660.4851	43-4	0.
43	1.50521	SLU 2-NL	Min	-4.352E-14	-624.6345	43-4	0.21503
43	1.72024	SLU 2-NL	Min	-3.986E-14	-592.456	43-4	0.43006
43	1.72024	SLU 2-NL	Min	-4.822E-14	-592.4118	43-5	0.
43	2.1503	SLU 2-NL	Min	-4.228E-14	-539.6361	43-5	0.43006
43	2.1503	SLU 2-NL	Min	-5.058E-14	-539.5867	43-6	0.
43	2.58036	SLU 2-NL	Min	-4.647E-14	-501.5097	43-6	0.43006
43	2.58036	SLU 2-NL	Min	-5.562E-14	-501.4565	43-7	0.
43	3.01042	SLU 2-NL	Min	-5.333E-14	-477.4915	43-7	0.43006
43	0.	SLU 3-NL	Max	-3.964E-14	-680.8186	43-1	0.
43	0.43006	SLU 3-NL	Max	-2.090E-14	-520.6859	43-1	0.43006
43	0.43006	SLU 3-NL	Max	-3.318E-14	-520.6839	43-2	0.
43	0.86012	SLU 3-NL	Max	-1.718E-14	-384.2294	43-2	0.43006
43	0.86012	SLU 3-NL	Max	-2.700E-14	-384.2265	43-3	0.
43	1.29018	SLU 3-NL	Max	-1.364E-14	-270.6231	43-3	0.43006
43	1.29018	SLU 3-NL	Max	-2.114E-14	-270.6195	43-4	0.
43	1.50521	SLU 3-NL	Max	-1.541E-14	-222.1398	43-4	0.21503
43	1.72024	SLU 3-NL	Max	-1.034E-14	-179.0288	43-4	0.43006
43	1.72024	SLU 3-NL	Max	-1.569E-14	-179.0249	43-5	0.
43	2.1503	SLU 3-NL	Max	-7.344E-15	-108.5989	43-5	0.43006
43	2.1503	SLU 3-NL	Max	-1.077E-14	-108.5949	43-6	0.
43	2.58036	SLU 3-NL	Max	-4.795E-15	-58.4789	43-6	0.43006
43	2.58036	SLU 3-NL	Max	-6.610E-15	-58.4749	43-7	0.
43	3.01042	SLU 3-NL	Max	-2.929E-15	-27.8093	43-7	0.43006
43	0.	SLU 3-NL	Min	-3.964E-14	-680.8186	43-1	0.
43	0.43006	SLU 3-NL	Min	-2.090E-14	-520.6859	43-1	0.43006
43	0.43006	SLU 3-NL	Min	-3.318E-14	-520.6839	43-2	0.
43	0.86012	SLU 3-NL	Min	-1.718E-14	-384.2294	43-2	0.43006
43	0.86012	SLU 3-NL	Min	-2.700E-14	-384.2265	43-3	0.
43	1.29018	SLU 3-NL	Min	-1.364E-14	-270.6231	43-3	0.43006
43	1.29018	SLU 3-NL	Min	-2.114E-14	-270.6195	43-4	0.
43	1.50521	SLU 3-NL	Min	-1.541E-14	-222.1398	43-4	0.21503
43	1.72024	SLU 3-NL	Min	-1.034E-14	-179.0288	43-4	0.43006
43	1.72024	SLU 3-NL	Min	-1.569E-14	-179.0249	43-5	0.
43	2.1503	SLU 3-NL	Min	-7.344E-15	-108.5989	43-5	0.43006
43	2.1503	SLU 3-NL	Min	-1.077E-14	-108.5949	43-6	0.
43	2.58036	SLU 3-NL	Min	-4.795E-15	-58.4789	43-6	0.43006
43	2.58036	SLU 3-NL	Min	-6.610E-15	-58.4749	43-7	0.
43	3.01042	SLU 3-NL	Min	-2.929E-15	-27.8093	43-7	0.43006
43	0.	SLU 4-NL	Max	-5.548E-14	-996.1005	43-1	0.
43	0.43006	SLU 4-NL	Max	-3.659E-14	-833.9478	43-1	0.43006
43	0.43006	SLU 4-NL	Max	-5.055E-14	-833.9478	43-2	0.
43	0.86012	SLU 4-NL	Max	-3.441E-14	-695.4065	43-2	0.43006
43	0.86012	SLU 4-NL	Max	-4.623E-14	-695.4065	43-3	0.
43	1.29018	SLU 4-NL	Max	-3.275E-14	-579.6188	43-3	0.43006
43	1.29018	SLU 4-NL	Max	-4.268E-14	-579.6188	43-4	0.
43	1.50521	SLU 4-NL	Max	-3.689E-14	-529.9896	43-4	0.21503
43	1.72024	SLU 4-NL	Max	-3.176E-14	-485.7267	43-4	0.43006
43	1.72024	SLU 4-NL	Max	-4.014E-14	-485.7267	43-5	0.
43	2.1503	SLU 4-NL	Max	-3.172E-14	-412.872	43-5	0.43006
43	2.1503	SLU 4-NL	Max	-3.903E-14	-412.872	43-6	0.
43	2.58036	SLU 4-NL	Max	-3.303E-14	-360.1957	43-6	0.43006
43	2.58036	SLU 4-NL	Max	-4.002E-14	-360.1957	43-7	0.
43	3.01042	SLU 4-NL	Max	-3.640E-14	-326.8382	43-7	0.43006

Table: Element Forces - Frames, Part 2 of 2

Frame	Station	OutputCase	StepType	M2	M3	FrameElem	ElemStation
	m			KN-m	KN-m		m
43	0.	SLU 4-NL	Min	-5.548E-14	-996.1005	43-1	0.
43	0.43006	SLU 4-NL	Min	-3.659E-14	-833.9478	43-1	0.43006
43	0.43006	SLU 4-NL	Min	-5.055E-14	-833.9478	43-2	0.
43	0.86012	SLU 4-NL	Min	-3.441E-14	-695.4065	43-2	0.43006
43	0.86012	SLU 4-NL	Min	-4.623E-14	-695.4065	43-3	0.
43	1.29018	SLU 4-NL	Min	-3.275E-14	-579.6188	43-3	0.43006
43	1.29018	SLU 4-NL	Min	-4.268E-14	-579.6188	43-4	0.
43	1.50521	SLU 4-NL	Min	-3.689E-14	-529.9896	43-4	0.21503
43	1.72024	SLU 4-NL	Min	-3.176E-14	-485.7267	43-4	0.43006
43	1.72024	SLU 4-NL	Min	-4.014E-14	-485.7267	43-5	0.
43	2.1503	SLU 4-NL	Min	-3.172E-14	-412.872	43-5	0.43006
43	2.1503	SLU 4-NL	Min	-3.903E-14	-412.872	43-6	0.
43	2.58036	SLU 4-NL	Min	-3.303E-14	-360.1957	43-6	0.43006
43	2.58036	SLU 4-NL	Min	-4.002E-14	-360.1957	43-7	0.
43	3.01042	SLU 4-NL	Min	-3.640E-14	-326.8382	43-7	0.43006
43	0.	SLU 5-NL	Max	-4.052E-14	-696.9034	43-1	0.
43	0.43006	SLU 5-NL	Max	-2.153E-14	-534.5868	43-1	0.43006
43	0.43006	SLU 5-NL	Max	-3.402E-14	-534.5868	43-2	0.
43	0.86012	SLU 5-NL	Max	-1.776E-14	-395.891	43-2	0.43006
43	0.86012	SLU 5-NL	Max	-2.778E-14	-395.891	43-3	0.
43	1.29018	SLU 5-NL	Max	-1.415E-14	-279.9582	43-3	0.43006
43	1.29018	SLU 5-NL	Max	-2.185E-14	-279.9582	43-4	0.
43	1.50521	SLU 5-NL	Max	-1.598E-14	-230.2601	43-4	0.21503
43	1.72024	SLU 5-NL	Max	-1.076E-14	-185.9307	43-4	0.43006
43	1.72024	SLU 5-NL	Max	-1.629E-14	-185.9307	43-5	0.
43	2.1503	SLU 5-NL	Max	-7.641E-15	-112.9507	43-5	0.43006
43	2.1503	SLU 5-NL	Max	-1.121E-14	-112.9507	43-6	0.
43	2.58036	SLU 5-NL	Max	-4.913E-15	-60.1605	43-6	0.43006
43	2.58036	SLU 5-NL	Max	-6.807E-15	-60.1605	43-7	0.
43	3.01042	SLU 5-NL	Max	-2.786E-15	-26.7021	43-7	0.43006
43	0.	SLU 5-NL	Min	-4.052E-14	-696.9034	43-1	0.
43	0.43006	SLU 5-NL	Min	-2.153E-14	-534.5868	43-1	0.43006
43	0.43006	SLU 5-NL	Min	-3.402E-14	-534.5868	43-2	0.
43	0.86012	SLU 5-NL	Min	-1.776E-14	-395.891	43-2	0.43006
43	0.86012	SLU 5-NL	Min	-2.778E-14	-395.891	43-3	0.
43	1.29018	SLU 5-NL	Min	-1.415E-14	-279.9582	43-3	0.43006
43	1.29018	SLU 5-NL	Min	-2.185E-14	-279.9582	43-4	0.
43	1.50521	SLU 5-NL	Min	-1.598E-14	-230.2601	43-4	0.21503
43	1.72024	SLU 5-NL	Min	-1.076E-14	-185.9307	43-4	0.43006
43	1.72024	SLU 5-NL	Min	-1.629E-14	-185.9307	43-5	0.
43	2.1503	SLU 5-NL	Min	-7.641E-15	-112.9507	43-5	0.43006
43	2.1503	SLU 5-NL	Min	-1.121E-14	-112.9507	43-6	0.
43	2.58036	SLU 5-NL	Min	-4.913E-15	-60.1605	43-6	0.43006
43	2.58036	SLU 5-NL	Min	-6.807E-15	-60.1605	43-7	0.
43	3.01042	SLU 5-NL	Min	-2.786E-15	-26.7021	43-7	0.43006
43	0.	SLU 6-NL	Max	-5.414E-14	-972.3021	43-1	0.
43	0.43006	SLU 6-NL	Max	-3.561E-14	-813.1832	43-1	0.43006
43	0.43006	SLU 6-NL	Max	-4.929E-14	-812.8823	43-2	0.
43	0.86012	SLU 6-NL	Max	-3.335E-14	-676.1247	43-2	0.43006
43	0.86012	SLU 6-NL	Max	-4.496E-14	-675.8112	43-3	0.
43	1.29018	SLU 6-NL	Max	-3.158E-14	-561.0114	43-3	0.43006
43	1.29018	SLU 6-NL	Max	-4.132E-14	-560.6862	43-4	0.
43	1.50521	SLU 6-NL	Max	-3.567E-14	-512.2164	43-4	0.21503
43	1.72024	SLU 6-NL	Max	-3.047E-14	-467.4193	43-4	0.43006

Table: Element Forces - Frames, Part 2 of 2

Frame	Station	OutputCase	StepType	M2	M3	FrameElem	ElemStation
	m			KN-m	KN-m		m
43	1.72024	SLU 6-NL	Max	-3.862E-14	-467.0834	43-5	0.
43	2.1503	SLU 6-NL	Max	-3.027E-14	-394.9034	43-5	0.43006
43	2.1503	SLU 6-NL	Max	-3.730E-14	-394.558	43-6	0.
43	2.58036	SLU 6-NL	Max	-3.142E-14	-342.9975	43-6	0.43006
43	2.58036	SLU 6-NL	Max	-3.807E-14	-342.6435	43-7	0.
43	3.01042	SLU 6-NL	Max	-3.466E-14	-311.2124	43-7	0.43006
43	0.	SLU 6-NL	Min	-5.414E-14	-972.3021	43-1	0.
43	0.43006	SLU 6-NL	Min	-3.561E-14	-813.1832	43-1	0.43006
43	0.43006	SLU 6-NL	Min	-4.929E-14	-812.8823	43-2	0.
43	0.86012	SLU 6-NL	Min	-3.335E-14	-676.1247	43-2	0.43006
43	0.86012	SLU 6-NL	Min	-4.496E-14	-675.8112	43-3	0.
43	1.29018	SLU 6-NL	Min	-3.158E-14	-561.0114	43-3	0.43006
43	1.29018	SLU 6-NL	Min	-4.132E-14	-560.6862	43-4	0.
43	1.50521	SLU 6-NL	Min	-3.567E-14	-512.2164	43-4	0.21503
43	1.72024	SLU 6-NL	Min	-3.047E-14	-467.4193	43-4	0.43006
43	1.72024	SLU 6-NL	Min	-3.862E-14	-467.0834	43-5	0.
43	2.1503	SLU 6-NL	Min	-3.027E-14	-394.9034	43-5	0.43006
43	2.1503	SLU 6-NL	Min	-3.730E-14	-394.558	43-6	0.
43	2.58036	SLU 6-NL	Min	-3.142E-14	-342.9975	43-6	0.43006
43	2.58036	SLU 6-NL	Min	-3.807E-14	-342.6435	43-7	0.
43	3.01042	SLU 6-NL	Min	-3.466E-14	-311.2124	43-7	0.43006
43	0.	SLU 7-NL	Max	-3.897E-14	-669.1889	43-1	0.
43	0.43006	SLU 7-NL	Max	-2.038E-14	-510.3115	43-1	0.43006
43	0.43006	SLU 7-NL	Max	-3.255E-14	-510.0989	43-2	0.
43	0.86012	SLU 7-NL	Max	-1.657E-14	-373.8296	43-2	0.43006
43	0.86012	SLU 7-NL	Max	-2.633E-14	-373.6119	43-3	0.
43	1.29018	SLU 7-NL	Max	-1.290E-14	-259.4443	43-3	0.43006
43	1.29018	SLU 7-NL	Max	-2.034E-14	-259.2218	43-4	0.
43	1.50521	SLU 7-NL	Max	-1.465E-14	-211.0927	43-4	0.21503
43	1.72024	SLU 7-NL	Max	-9.414E-15	-166.6386	43-4	0.43006
43	1.72024	SLU 7-NL	Max	-1.468E-14	-166.4116	43-5	0.
43	2.1503	SLU 7-NL	Max	-6.197E-15	-94.8865	43-5	0.43006
43	2.1503	SLU 7-NL	Max	-9.471E-15	-94.6552	43-6	0.
43	2.58036	SLU 7-NL	Max	-3.378E-15	-43.6554	43-6	0.43006
43	2.58036	SLU 7-NL	Max	-4.939E-15	-43.42	43-7	0.
43	3.01042	SLU 7-NL	Max	-1.196E-15	-12.4088	43-7	0.43006
43	0.	SLU 7-NL	Min	-3.897E-14	-669.1889	43-1	0.
43	0.43006	SLU 7-NL	Min	-2.038E-14	-510.3115	43-1	0.43006
43	0.43006	SLU 7-NL	Min	-3.255E-14	-510.0989	43-2	0.
43	0.86012	SLU 7-NL	Min	-1.657E-14	-373.8296	43-2	0.43006
43	0.86012	SLU 7-NL	Min	-2.633E-14	-373.6119	43-3	0.
43	1.29018	SLU 7-NL	Min	-1.290E-14	-259.4443	43-3	0.43006
43	1.29018	SLU 7-NL	Min	-2.034E-14	-259.2218	43-4	0.
43	1.50521	SLU 7-NL	Min	-1.465E-14	-211.0927	43-4	0.21503
43	1.72024	SLU 7-NL	Min	-9.414E-15	-166.6386	43-4	0.43006
43	1.72024	SLU 7-NL	Min	-1.468E-14	-166.4116	43-5	0.
43	2.1503	SLU 7-NL	Min	-6.197E-15	-94.8865	43-5	0.43006
43	2.1503	SLU 7-NL	Min	-9.471E-15	-94.6552	43-6	0.
43	2.58036	SLU 7-NL	Min	-3.378E-15	-43.6554	43-6	0.43006
43	2.58036	SLU 7-NL	Min	-4.939E-15	-43.42	43-7	0.
43	3.01042	SLU 7-NL	Min	-1.196E-15	-12.4088	43-7	0.43006
43	0.	SLE-C-NL	Max	-4.155E-14	-744.0371	43-1	0.
43	0.43006	SLE-C-NL	Max	-2.706E-14	-619.701	43-1	0.43006
43	0.43006	SLE-C-NL	Max	-3.767E-14	-619.6927	43-2	0.

Table: Element Forces - Frames, Part 2 of 2

Frame	Station	OutputCase	StepType	M2	M3	FrameElem	ElemStation
	m			KN-m	KN-m		m
43	0.86012	SLE-C-NL	Max	-2.529E-14	-513.4997	43-2	0.43006
43	0.86012	SLE-C-NL	Max	-3.423E-14	-513.4878	43-3	0.
43	1.29018	SLE-C-NL	Max	-2.390E-14	-424.8768	43-3	0.43006
43	1.29018	SLE-C-NL	Max	-3.135E-14	-424.8618	43-4	0.
43	1.50521	SLE-C-NL	Max	-2.694E-14	-387.0247	43-4	0.21503
43	1.72024	SLE-C-NL	Max	-2.302E-14	-353.2556	43-4	0.43006
43	1.72024	SLE-C-NL	Max	-2.924E-14	-353.2381	43-5	0.
43	2.1503	SLE-C-NL	Max	-2.285E-14	-298.0435	43-5	0.43006
43	2.1503	SLE-C-NL	Max	-2.819E-14	-298.0241	43-6	0.
43	2.58036	SLE-C-NL	Max	-2.369E-14	-258.632	43-6	0.43006
43	2.58036	SLE-C-NL	Max	-2.874E-14	-258.6114	43-7	0.
43	3.01042	SLE-C-NL	Max	-2.610E-14	-234.3957	43-7	0.43006
43	0.	SLE-C-NL	Min	-4.155E-14	-744.0371	43-1	0.
43	0.43006	SLE-C-NL	Min	-2.706E-14	-619.701	43-1	0.43006
43	0.43006	SLE-C-NL	Min	-3.767E-14	-619.6927	43-2	0.
43	0.86012	SLE-C-NL	Min	-2.529E-14	-513.4997	43-2	0.43006
43	0.86012	SLE-C-NL	Min	-3.423E-14	-513.4878	43-3	0.
43	1.29018	SLE-C-NL	Min	-2.390E-14	-424.8768	43-3	0.43006
43	1.29018	SLE-C-NL	Min	-3.135E-14	-424.8618	43-4	0.
43	1.50521	SLE-C-NL	Min	-2.694E-14	-387.0247	43-4	0.21503
43	1.72024	SLE-C-NL	Min	-2.302E-14	-353.2556	43-4	0.43006
43	1.72024	SLE-C-NL	Min	-2.924E-14	-353.2381	43-5	0.
43	2.1503	SLE-C-NL	Min	-2.285E-14	-298.0435	43-5	0.43006
43	2.1503	SLE-C-NL	Min	-2.819E-14	-298.0241	43-6	0.
43	2.58036	SLE-C-NL	Min	-2.369E-14	-258.632	43-6	0.43006
43	2.58036	SLE-C-NL	Min	-2.874E-14	-258.6114	43-7	0.
43	3.01042	SLE-C-NL	Min	-2.610E-14	-234.3957	43-7	0.43006
43	0.	SLE-F-1-NL	Max	-4.001E-14	-721.3423	43-1	0.
43	0.43006	SLE-F-1-NL	Max	-2.690E-14	-608.6735	43-1	0.43006
43	0.43006	SLE-F-1-NL	Max	-3.673E-14	-608.6647	43-2	0.
43	0.86012	SLE-F-1-NL	Max	-2.555E-14	-512.582	43-2	0.43006
43	0.86012	SLE-F-1-NL	Max	-3.392E-14	-512.5694	43-3	0.
43	1.29018	SLE-F-1-NL	Max	-2.461E-14	-432.5192	43-3	0.43006
43	1.29018	SLE-F-1-NL	Max	-3.171E-14	-432.5033	43-4	0.
43	1.50521	SLE-F-1-NL	Max	-2.774E-14	-398.3725	43-4	0.21503
43	1.72024	SLE-F-1-NL	Max	-2.422E-14	-367.9159	43-4	0.43006
43	1.72024	SLE-F-1-NL	Max	-3.029E-14	-367.8973	43-5	0.
43	2.1503	SLE-F-1-NL	Max	-2.457E-14	-318.1866	43-5	0.43006
43	2.1503	SLE-F-1-NL	Max	-3.001E-14	-318.1659	43-6	0.
43	2.58036	SLE-F-1-NL	Max	-2.601E-14	-282.7291	43-6	0.43006
43	2.58036	SLE-F-1-NL	Max	-3.139E-14	-282.707	43-7	0.
43	3.01042	SLE-F-1-NL	Max	-2.909E-14	-260.9228	43-7	0.43006
43	0.	SLE-F-1-NL	Min	-4.001E-14	-721.3423	43-1	0.
43	0.43006	SLE-F-1-NL	Min	-2.690E-14	-608.6735	43-1	0.43006
43	0.43006	SLE-F-1-NL	Min	-3.673E-14	-608.6647	43-2	0.
43	0.86012	SLE-F-1-NL	Min	-2.555E-14	-512.582	43-2	0.43006
43	0.86012	SLE-F-1-NL	Min	-3.392E-14	-512.5694	43-3	0.
43	1.29018	SLE-F-1-NL	Min	-2.461E-14	-432.5192	43-3	0.43006
43	1.29018	SLE-F-1-NL	Min	-3.171E-14	-432.5033	43-4	0.
43	1.50521	SLE-F-1-NL	Min	-2.774E-14	-398.3725	43-4	0.21503
43	1.72024	SLE-F-1-NL	Min	-2.422E-14	-367.9159	43-4	0.43006
43	1.72024	SLE-F-1-NL	Min	-3.029E-14	-367.8973	43-5	0.
43	2.1503	SLE-F-1-NL	Min	-2.457E-14	-318.1866	43-5	0.43006
43	2.1503	SLE-F-1-NL	Min	-3.001E-14	-318.1659	43-6	0.

Table: Element Forces - Frames, Part 2 of 2

Frame	Station	OutputCase	StepType	M2	M3	FrameElem	ElemStation
	m			KN-m	KN-m		m
43	2.58036	SLE-F-1-NL	Min	-2.601E-14	-282.7291	43-6	0.43006
43	2.58036	SLE-F-1-NL	Min	-3.139E-14	-282.707	43-7	0.
43	3.01042	SLE-F-1-NL	Min	-2.909E-14	-260.9228	43-7	0.43006
43	0.	SLE-F-2-NL	Max	-3.762E-14	-667.6176	43-1	0.
43	0.43006	SLE-F-2-NL	Max	-2.348E-14	-546.3452	43-1	0.43006
43	0.43006	SLE-F-2-NL	Max	-3.353E-14	-546.3452	43-2	0.
43	0.86012	SLE-F-2-NL	Max	-2.143E-14	-442.6825	43-2	0.43006
43	0.86012	SLE-F-2-NL	Max	-2.981E-14	-442.6825	43-3	0.
43	1.29018	SLE-F-2-NL	Max	-1.968E-14	-355.9697	43-3	0.43006
43	1.29018	SLE-F-2-NL	Max	-2.653E-14	-355.9697	43-4	0.
43	1.50521	SLE-F-2-NL	Max	-2.218E-14	-318.7632	43-4	0.21503
43	1.72024	SLE-F-2-NL	Max	-1.831E-14	-285.5465	43-4	0.43006
43	1.72024	SLE-F-2-NL	Max	-2.384E-14	-285.5465	43-5	0.
43	2.1503	SLE-F-2-NL	Max	-1.745E-14	-230.7531	43-5	0.43006
43	2.1503	SLE-F-2-NL	Max	-2.196E-14	-230.7531	43-6	0.
43	2.58036	SLE-F-2-NL	Max	-1.734E-14	-190.9289	43-6	0.43006
43	2.58036	SLE-F-2-NL	Max	-2.125E-14	-190.9289	43-7	0.
43	3.01042	SLE-F-2-NL	Max	-1.837E-14	-165.4135	43-7	0.43006
43	0.	SLE-F-2-NL	Min	-3.762E-14	-667.6176	43-1	0.
43	0.43006	SLE-F-2-NL	Min	-2.348E-14	-546.3452	43-1	0.43006
43	0.43006	SLE-F-2-NL	Min	-3.353E-14	-546.3452	43-2	0.
43	0.86012	SLE-F-2-NL	Min	-2.143E-14	-442.6825	43-2	0.43006
43	0.86012	SLE-F-2-NL	Min	-2.981E-14	-442.6825	43-3	0.
43	1.29018	SLE-F-2-NL	Min	-1.968E-14	-355.9697	43-3	0.43006
43	1.29018	SLE-F-2-NL	Min	-2.653E-14	-355.9697	43-4	0.
43	1.50521	SLE-F-2-NL	Min	-2.218E-14	-318.7632	43-4	0.21503
43	1.72024	SLE-F-2-NL	Min	-1.831E-14	-285.5465	43-4	0.43006
43	1.72024	SLE-F-2-NL	Min	-2.384E-14	-285.5465	43-5	0.
43	2.1503	SLE-F-2-NL	Min	-1.745E-14	-230.7531	43-5	0.43006
43	2.1503	SLE-F-2-NL	Min	-2.196E-14	-230.7531	43-6	0.
43	2.58036	SLE-F-2-NL	Min	-1.734E-14	-190.9289	43-6	0.43006
43	2.58036	SLE-F-2-NL	Min	-2.125E-14	-190.9289	43-7	0.
43	3.01042	SLE-F-2-NL	Min	-1.837E-14	-165.4135	43-7	0.43006
43	0.	SLE-F-3-NL	Max	-3.710E-14	-657.8184	43-1	0.
43	0.43006	SLE-F-3-NL	Max	-2.304E-14	-537.3379	43-1	0.43006
43	0.43006	SLE-F-3-NL	Max	-3.301E-14	-537.304	43-2	0.
43	0.86012	SLE-F-3-NL	Max	-2.097E-14	-434.1728	43-2	0.43006
43	0.86012	SLE-F-3-NL	Max	-2.926E-14	-434.1342	43-3	0.
43	1.29018	SLE-F-3-NL	Max	-1.918E-14	-347.8336	43-3	0.43006
43	1.29018	SLE-F-3-NL	Max	-2.595E-14	-347.7908	43-4	0.
43	1.50521	SLE-F-3-NL	Max	-2.163E-14	-310.9526	43-4	0.21503
43	1.72024	SLE-F-3-NL	Max	-1.777E-14	-277.789	43-4	0.43006
43	1.72024	SLE-F-3-NL	Max	-2.321E-14	-277.7423	43-5	0.
43	2.1503	SLE-F-3-NL	Max	-1.688E-14	-223.4943	43-5	0.43006
43	2.1503	SLE-F-3-NL	Max	-2.127E-14	-223.4442	43-6	0.
43	2.58036	SLE-F-3-NL	Max	-1.674E-14	-184.3929	43-6	0.43006
43	2.58036	SLE-F-3-NL	Max	-2.051E-14	-184.3397	43-7	0.
43	3.01042	SLE-F-3-NL	Max	-1.776E-14	-159.9157	43-7	0.43006
43	0.	SLE-F-3-NL	Min	-3.710E-14	-657.8184	43-1	0.
43	0.43006	SLE-F-3-NL	Min	-2.304E-14	-537.3379	43-1	0.43006
43	0.43006	SLE-F-3-NL	Min	-3.301E-14	-537.304	43-2	0.
43	0.86012	SLE-F-3-NL	Min	-2.097E-14	-434.1728	43-2	0.43006
43	0.86012	SLE-F-3-NL	Min	-2.926E-14	-434.1342	43-3	0.
43	1.29018	SLE-F-3-NL	Min	-1.918E-14	-347.8336	43-3	0.43006

Table: Element Forces - Frames, Part 2 of 2

Frame	Station	OutputCase	StepType	M2	M3	FrameElem	ElemStation
	m			KN-m	KN-m		m
43	1.29018	SLE-F-3-NL	Min	-2.595E-14	-347.7908	43-4	0.
43	1.50521	SLE-F-3-NL	Min	-2.163E-14	-310.9526	43-4	0.21503
43	1.72024	SLE-F-3-NL	Min	-1.777E-14	-277.789	43-4	0.43006
43	1.72024	SLE-F-3-NL	Min	-2.321E-14	-277.7423	43-5	0.
43	2.1503	SLE-F-3-NL	Min	-1.688E-14	-223.4943	43-5	0.43006
43	2.1503	SLE-F-3-NL	Min	-2.127E-14	-223.4442	43-6	0.
43	2.58036	SLE-F-3-NL	Min	-1.674E-14	-184.3929	43-6	0.43006
43	2.58036	SLE-F-3-NL	Min	-2.051E-14	-184.3397	43-7	0.
43	3.01042	SLE-F-3-NL	Min	-1.776E-14	-159.9157	43-7	0.43006
43	0.	SLE-QP-NL	Max	-3.686E-14	-657.9706	43-1	0.
43	0.43006	SLE-QP-NL	Max	-2.367E-14	-544.8018	43-1	0.43006
43	0.43006	SLE-QP-NL	Max	-3.322E-14	-544.7957	43-2	0.
43	0.86012	SLE-QP-NL	Max	-2.195E-14	-448.1585	43-2	0.43006
43	0.86012	SLE-QP-NL	Max	-2.997E-14	-448.1497	43-3	0.
43	1.29018	SLE-QP-NL	Max	-2.056E-14	-367.4663	43-3	0.43006
43	1.29018	SLE-QP-NL	Max	-2.720E-14	-367.4553	43-4	0.
43	1.50521	SLE-QP-NL	Max	-2.317E-14	-332.9573	43-4	0.21503
43	1.72024	SLE-QP-NL	Max	-1.959E-14	-302.1339	43-4	0.43006
43	1.72024	SLE-QP-NL	Max	-2.508E-14	-302.121	43-5	0.
43	2.1503	SLE-QP-NL	Max	-1.920E-14	-251.5562	43-5	0.43006
43	2.1503	SLE-QP-NL	Max	-2.384E-14	-251.5419	43-6	0.
43	2.58036	SLE-QP-NL	Max	-1.966E-14	-215.1146	43-6	0.43006
43	2.58036	SLE-QP-NL	Max	-2.391E-14	-215.0994	43-7	0.
43	3.01042	SLE-QP-NL	Max	-2.138E-14	-192.1763	43-7	0.43006
43	0.	SLE-QP-NL	Min	-3.686E-14	-657.9706	43-1	0.
43	0.43006	SLE-QP-NL	Min	-2.367E-14	-544.8018	43-1	0.43006
43	0.43006	SLE-QP-NL	Min	-3.322E-14	-544.7957	43-2	0.
43	0.86012	SLE-QP-NL	Min	-2.195E-14	-448.1585	43-2	0.43006
43	0.86012	SLE-QP-NL	Min	-2.997E-14	-448.1497	43-3	0.
43	1.29018	SLE-QP-NL	Min	-2.056E-14	-367.4663	43-3	0.43006
43	1.29018	SLE-QP-NL	Min	-2.720E-14	-367.4553	43-4	0.
43	1.50521	SLE-QP-NL	Min	-2.317E-14	-332.9573	43-4	0.21503
43	1.72024	SLE-QP-NL	Min	-1.959E-14	-302.1339	43-4	0.43006
43	1.72024	SLE-QP-NL	Min	-2.508E-14	-302.121	43-5	0.
43	2.1503	SLE-QP-NL	Min	-1.920E-14	-251.5562	43-5	0.43006
43	2.1503	SLE-QP-NL	Min	-2.384E-14	-251.5419	43-6	0.
43	2.58036	SLE-QP-NL	Min	-1.966E-14	-215.1146	43-6	0.43006
43	2.58036	SLE-QP-NL	Min	-2.391E-14	-215.0994	43-7	0.
43	3.01042	SLE-QP-NL	Min	-2.138E-14	-192.1763	43-7	0.43006
43	0.	SLV1-NL	Max	-4.033E-14	-703.2525	43-1	0.
43	0.43006	SLV1-NL	Max	-2.305E-14	-555.4121	43-1	0.43006
43	0.43006	SLV1-NL	Max	-3.479E-14	-555.4121	43-2	0.
43	0.86012	SLV1-NL	Max	-1.992E-14	-428.397	43-2	0.43006
43	0.86012	SLV1-NL	Max	-2.952E-14	-428.397	43-3	0.
43	1.29018	SLV1-NL	Max	-1.698E-14	-321.5104	43-3	0.43006
43	1.29018	SLV1-NL	Max	-2.457E-14	-321.5104	43-4	0.
43	1.50521	SLV1-NL	Max	-1.913E-14	-275.3978	43-4	0.21503
43	1.72024	SLV1-NL	Max	-1.428E-14	-234.0555	43-4	0.43006
43	1.72024	SLV1-NL	Max	-2.003E-14	-234.0555	43-5	0.
43	2.1503	SLV1-NL	Max	-1.193E-14	-165.3355	43-5	0.43006
43	2.1503	SLV1-NL	Max	-1.603E-14	-165.3355	43-6	0.
43	2.58036	SLV1-NL	Max	-1.005E-14	-114.6533	43-6	0.43006
43	2.58036	SLV1-NL	Max	-1.284E-14	-114.6533	43-7	0.
43	3.01042	SLV1-NL	Max	-8.901E-15	-81.3118	43-7	0.43006

Table: Element Forces - Frames, Part 2 of 2

Frame	Station	OutputCase	StepType	M2	M3	FrameElem	ElemStation
	m			KN-m	KN-m		m
43	0.	SLV1-NL	Min	-4.033E-14	-703.2525	43-1	0.
43	0.43006	SLV1-NL	Min	-2.305E-14	-555.4121	43-1	0.43006
43	0.43006	SLV1-NL	Min	-3.479E-14	-555.4121	43-2	0.
43	0.86012	SLV1-NL	Min	-1.992E-14	-428.397	43-2	0.43006
43	0.86012	SLV1-NL	Min	-2.952E-14	-428.397	43-3	0.
43	1.29018	SLV1-NL	Min	-1.698E-14	-321.5104	43-3	0.43006
43	1.29018	SLV1-NL	Min	-2.457E-14	-321.5104	43-4	0.
43	1.50521	SLV1-NL	Min	-1.913E-14	-275.3978	43-4	0.21503
43	1.72024	SLV1-NL	Min	-1.428E-14	-234.0555	43-4	0.43006
43	1.72024	SLV1-NL	Min	-2.003E-14	-234.0555	43-5	0.
43	2.1503	SLV1-NL	Min	-1.193E-14	-165.3355	43-5	0.43006
43	2.1503	SLV1-NL	Min	-1.603E-14	-165.3355	43-6	0.
43	2.58036	SLV1-NL	Min	-1.005E-14	-114.6533	43-6	0.43006
43	2.58036	SLV1-NL	Min	-1.284E-14	-114.6533	43-7	0.
43	3.01042	SLV1-NL	Min	-8.901E-15	-81.3118	43-7	0.43006
43	0.	SLV2-NL	Max	-3.819E-14	-674.9226	43-1	0.
43	0.43006	SLV2-NL	Max	-2.325E-14	-546.963	43-1	0.43006
43	0.43006	SLV2-NL	Max	-3.371E-14	-546.7566	43-2	0.
43	0.86012	SLV2-NL	Max	-2.091E-14	-437.1833	43-2	0.43006
43	0.86012	SLV2-NL	Max	-2.957E-14	-436.9694	43-3	0.
43	1.29018	SLV2-NL	Max	-1.885E-14	-345.3755	43-3	0.43006
43	1.29018	SLV2-NL	Max	-2.585E-14	-345.1545	43-4	0.
43	1.50521	SLV2-NL	Max	-2.135E-14	-306.7688	43-4	0.21503
43	1.72024	SLV2-NL	Max	-1.718E-14	-271.1197	43-4	0.43006
43	1.72024	SLV2-NL	Max	-2.270E-14	-270.892	43-5	0.
43	2.1503	SLV2-NL	Max	-1.604E-14	-213.9832	43-5	0.43006
43	2.1503	SLV2-NL	Max	-2.037E-14	-213.7493	43-6	0.
43	2.58036	SLV2-NL	Max	-1.569E-14	-173.5216	43-6	0.43006
43	2.58036	SLV2-NL	Max	-1.928E-14	-173.2819	43-7	0.
43	3.01042	SLV2-NL	Max	-1.657E-14	-149.2786	43-7	0.43006
43	0.	SLV2-NL	Min	-3.819E-14	-674.9226	43-1	0.
43	0.43006	SLV2-NL	Min	-2.325E-14	-546.963	43-1	0.43006
43	0.43006	SLV2-NL	Min	-3.371E-14	-546.7566	43-2	0.
43	0.86012	SLV2-NL	Min	-2.091E-14	-437.1833	43-2	0.43006
43	0.86012	SLV2-NL	Min	-2.957E-14	-436.9694	43-3	0.
43	1.29018	SLV2-NL	Min	-1.885E-14	-345.3755	43-3	0.43006
43	1.29018	SLV2-NL	Min	-2.585E-14	-345.1545	43-4	0.
43	1.50521	SLV2-NL	Min	-2.135E-14	-306.7688	43-4	0.21503
43	1.72024	SLV2-NL	Min	-1.718E-14	-271.1197	43-4	0.43006
43	1.72024	SLV2-NL	Min	-2.270E-14	-270.892	43-5	0.
43	2.1503	SLV2-NL	Min	-1.604E-14	-213.9832	43-5	0.43006
43	2.1503	SLV2-NL	Min	-2.037E-14	-213.7493	43-6	0.
43	2.58036	SLV2-NL	Min	-1.569E-14	-173.5216	43-6	0.43006
43	2.58036	SLV2-NL	Min	-1.928E-14	-173.2819	43-7	0.
43	3.01042	SLV2-NL	Min	-1.657E-14	-149.2786	43-7	0.43006
43	0.	SLV3-NL	Max	-4.023E-14	-701.5855	43-1	0.
43	0.43006	SLV3-NL	Max	-2.301E-14	-554.2812	43-1	0.43006
43	0.43006	SLV3-NL	Max	-3.471E-14	-554.2812	43-2	0.
43	0.86012	SLV3-NL	Max	-1.990E-14	-427.8022	43-2	0.43006
43	0.86012	SLV3-NL	Max	-2.946E-14	-427.8022	43-3	0.
43	1.29018	SLV3-NL	Max	-1.699E-14	-321.4517	43-3	0.43006
43	1.29018	SLV3-NL	Max	-2.455E-14	-321.4517	43-4	0.
43	1.50521	SLV3-NL	Max	-1.915E-14	-275.607	43-4	0.21503
43	1.72024	SLV3-NL	Max	-1.433E-14	-234.5328	43-4	0.43006

Table: Element Forces - Frames, Part 2 of 2

Frame	Station	OutputCase	StepType	M2	M3	FrameElem	ElemStation
	m			KN-m	KN-m		m
43	1.72024	SLV3-NL	Max	-2.006E-14	-234.5328	43-5	0.
43	2.1503	SLV3-NL	Max	-1.202E-14	-166.3488	43-5	0.43006
43	2.1503	SLV3-NL	Max	-1.612E-14	-166.3488	43-6	0.
43	2.58036	SLV3-NL	Max	-1.020E-14	-116.2025	43-6	0.43006
43	2.58036	SLV3-NL	Max	-1.301E-14	-116.2025	43-7	0.
43	3.01042	SLV3-NL	Max	-9.138E-15	-83.3968	43-7	0.43006
43	0.	SLV3-NL	Min	-4.023E-14	-701.5855	43-1	0.
43	0.43006	SLV3-NL	Min	-2.301E-14	-554.2812	43-1	0.43006
43	0.43006	SLV3-NL	Min	-3.471E-14	-554.2812	43-2	0.
43	0.86012	SLV3-NL	Min	-1.990E-14	-427.8022	43-2	0.43006
43	0.86012	SLV3-NL	Min	-2.946E-14	-427.8022	43-3	0.
43	1.29018	SLV3-NL	Min	-1.699E-14	-321.4517	43-3	0.43006
43	1.29018	SLV3-NL	Min	-2.455E-14	-321.4517	43-4	0.
43	1.50521	SLV3-NL	Min	-1.915E-14	-275.607	43-4	0.21503
43	1.72024	SLV3-NL	Min	-1.433E-14	-234.5328	43-4	0.43006
43	1.72024	SLV3-NL	Min	-2.006E-14	-234.5328	43-5	0.
43	2.1503	SLV3-NL	Min	-1.202E-14	-166.3488	43-5	0.43006
43	2.1503	SLV3-NL	Min	-1.612E-14	-166.3488	43-6	0.
43	2.58036	SLV3-NL	Min	-1.020E-14	-116.2025	43-6	0.43006
43	2.58036	SLV3-NL	Min	-1.301E-14	-116.2025	43-7	0.
43	3.01042	SLV3-NL	Min	-9.138E-15	-83.3968	43-7	0.43006
43	0.	SLV4-NL	Max	-3.809E-14	-673.2855	43-1	0.
43	0.43006	SLV4-NL	Max	-2.321E-14	-545.8585	43-1	0.43006
43	0.43006	SLV4-NL	Max	-3.364E-14	-545.6531	43-2	0.
43	0.86012	SLV4-NL	Max	-2.089E-14	-436.6101	43-2	0.43006
43	0.86012	SLV4-NL	Max	-2.952E-14	-436.3972	43-3	0.
43	1.29018	SLV4-NL	Max	-1.887E-14	-345.332	43-3	0.43006
43	1.29018	SLV4-NL	Max	-2.583E-14	-345.1121	43-4	0.
43	1.50521	SLV4-NL	Max	-2.136E-14	-306.9902	43-4	0.21503
43	1.72024	SLV4-NL	Max	-1.723E-14	-271.605	43-4	0.43006
43	1.72024	SLV4-NL	Max	-2.273E-14	-271.3784	43-5	0.
43	2.1503	SLV4-NL	Max	-1.614E-14	-214.9969	43-5	0.43006
43	2.1503	SLV4-NL	Max	-2.046E-14	-214.7641	43-6	0.
43	2.58036	SLV4-NL	Max	-1.585E-14	-175.064	43-6	0.43006
43	2.58036	SLV4-NL	Max	-1.945E-14	-174.8254	43-7	0.
43	3.01042	SLV4-NL	Max	-1.680E-14	-151.3505	43-7	0.43006
43	0.	SLV4-NL	Min	-3.809E-14	-673.2855	43-1	0.
43	0.43006	SLV4-NL	Min	-2.321E-14	-545.8585	43-1	0.43006
43	0.43006	SLV4-NL	Min	-3.364E-14	-545.6531	43-2	0.
43	0.86012	SLV4-NL	Min	-2.089E-14	-436.6101	43-2	0.43006
43	0.86012	SLV4-NL	Min	-2.952E-14	-436.3972	43-3	0.
43	1.29018	SLV4-NL	Min	-1.887E-14	-345.332	43-3	0.43006
43	1.29018	SLV4-NL	Min	-2.583E-14	-345.1121	43-4	0.
43	1.50521	SLV4-NL	Min	-2.136E-14	-306.9902	43-4	0.21503
43	1.72024	SLV4-NL	Min	-1.723E-14	-271.605	43-4	0.43006
43	1.72024	SLV4-NL	Min	-2.273E-14	-271.3784	43-5	0.
43	2.1503	SLV4-NL	Min	-1.614E-14	-214.9969	43-5	0.43006
43	2.1503	SLV4-NL	Min	-2.046E-14	-214.7641	43-6	0.
43	2.58036	SLV4-NL	Min	-1.585E-14	-175.064	43-6	0.43006
43	2.58036	SLV4-NL	Min	-1.945E-14	-174.8254	43-7	0.
43	3.01042	SLV4-NL	Min	-1.680E-14	-151.3505	43-7	0.43006
43	0.	SLV5-NL	Max	-3.854E-14	-684.104	43-1	0.
43	0.43006	SLV5-NL	Max	-2.409E-14	-560.2329	43-1	0.43006
43	0.43006	SLV5-NL	Max	-3.438E-14	-560.2329	43-2	0.

Table: Element Forces - Frames, Part 2 of 2

Frame	Station	OutputCase	StepType	M2	M3	FrameElem	ElemStation
	m			KN-m	KN-m		m
43	0.86012	SLV5-NL	Max	-2.200E-14	-454.2734	43-2	0.43006
43	0.86012	SLV5-NL	Max	-3.058E-14	-454.2734	43-3	0.
43	1.29018	SLV5-NL	Max	-2.022E-14	-365.5545	43-3	0.43006
43	1.29018	SLV5-NL	Max	-2.724E-14	-365.5545	43-4	0.
43	1.50521	SLV5-NL	Max	-2.278E-14	-327.4506	43-4	0.21503
43	1.72024	SLV5-NL	Max	-1.881E-14	-293.405	43-4	0.43006
43	1.72024	SLV5-NL	Max	-2.450E-14	-293.405	43-5	0.
43	2.1503	SLV5-NL	Max	-1.794E-14	-237.1539	43-5	0.43006
43	2.1503	SLV5-NL	Max	-2.257E-14	-237.1539	43-6	0.
43	2.58036	SLV5-NL	Max	-1.781E-14	-196.1296	43-6	0.43006
43	2.58036	SLV5-NL	Max	-2.183E-14	-196.1296	43-7	0.
43	3.01042	SLV5-NL	Max	-1.884E-14	-169.6605	43-7	0.43006
43	0.	SLV5-NL	Min	-3.854E-14	-684.104	43-1	0.
43	0.43006	SLV5-NL	Min	-2.409E-14	-560.2329	43-1	0.43006
43	0.43006	SLV5-NL	Min	-3.438E-14	-560.2329	43-2	0.
43	0.86012	SLV5-NL	Min	-2.200E-14	-454.2734	43-2	0.43006
43	0.86012	SLV5-NL	Min	-3.058E-14	-454.2734	43-3	0.
43	1.29018	SLV5-NL	Min	-2.022E-14	-365.5545	43-3	0.43006
43	1.29018	SLV5-NL	Min	-2.724E-14	-365.5545	43-4	0.
43	1.50521	SLV5-NL	Min	-2.278E-14	-327.4506	43-4	0.21503
43	1.72024	SLV5-NL	Min	-1.881E-14	-293.405	43-4	0.43006
43	1.72024	SLV5-NL	Min	-2.450E-14	-293.405	43-5	0.
43	2.1503	SLV5-NL	Min	-1.794E-14	-237.1539	43-5	0.43006
43	2.1503	SLV5-NL	Min	-2.257E-14	-237.1539	43-6	0.
43	2.58036	SLV5-NL	Min	-1.781E-14	-196.1296	43-6	0.43006
43	2.58036	SLV5-NL	Min	-2.183E-14	-196.1296	43-7	0.
43	3.01042	SLV5-NL	Min	-1.884E-14	-169.6605	43-7	0.43006
43	0.	SLV6-NL	Max	-3.798E-14	-677.223	43-1	0.
43	0.43006	SLV6-NL	Max	-2.421E-14	-559.089	43-1	0.43006
43	0.43006	SLV6-NL	Max	-3.414E-14	-559.0321	43-2	0.
43	0.86012	SLV6-NL	Max	-2.235E-14	-457.9571	43-2	0.43006
43	0.86012	SLV6-NL	Max	-3.067E-14	-457.8959	43-3	0.
43	1.29018	SLV6-NL	Max	-2.081E-14	-373.356	43-3	0.43006
43	1.29018	SLV6-NL	Max	-2.768E-14	-373.291	43-4	0.
43	1.50521	SLV6-NL	Max	-2.347E-14	-337.2954	43-4	0.21503
43	1.72024	SLV6-NL	Max	-1.969E-14	-304.748	43-4	0.43006
43	1.72024	SLV6-NL	Max	-2.533E-14	-304.6797	43-5	0.
43	2.1503	SLV6-NL	Max	-1.915E-14	-251.5818	43-5	0.43006
43	2.1503	SLV6-NL	Max	-2.386E-14	-251.5105	43-6	0.
43	2.58036	SLV6-NL	Max	-1.946E-14	-213.2918	43-6	0.43006
43	2.58036	SLV6-NL	Max	-2.371E-14	-213.2182	43-7	0.
43	3.01042	SLV6-NL	Max	-2.105E-14	-189.299	43-7	0.43006
43	0.	SLV6-NL	Min	-3.798E-14	-677.223	43-1	0.
43	0.43006	SLV6-NL	Min	-2.421E-14	-559.089	43-1	0.43006
43	0.43006	SLV6-NL	Min	-3.414E-14	-559.0321	43-2	0.
43	0.86012	SLV6-NL	Min	-2.235E-14	-457.9571	43-2	0.43006
43	0.86012	SLV6-NL	Min	-3.067E-14	-457.8959	43-3	0.
43	1.29018	SLV6-NL	Min	-2.081E-14	-373.356	43-3	0.43006
43	1.29018	SLV6-NL	Min	-2.768E-14	-373.291	43-4	0.
43	1.50521	SLV6-NL	Min	-2.347E-14	-337.2954	43-4	0.21503
43	1.72024	SLV6-NL	Min	-1.969E-14	-304.748	43-4	0.43006
43	1.72024	SLV6-NL	Min	-2.533E-14	-304.6797	43-5	0.
43	2.1503	SLV6-NL	Min	-1.915E-14	-251.5818	43-5	0.43006
43	2.1503	SLV6-NL	Min	-2.386E-14	-251.5105	43-6	0.

Table: Element Forces - Frames, Part 2 of 2

Frame	Station	OutputCase	StepType	M2	M3	FrameElem	ElemStation
	m			KN-m	KN-m		m
43	2.58036	SLV6-NL	Min	-1.946E-14	-213.2918	43-6	0.43006
43	2.58036	SLV6-NL	Min	-2.371E-14	-213.2182	43-7	0.
43	3.01042	SLV6-NL	Min	-2.105E-14	-189.299	43-7	0.43006
43	0.	SLV7-NL	Max	-3.820E-14	-678.5359	43-1	0.
43	0.43006	SLV7-NL	Max	-2.396E-14	-556.4527	43-1	0.43006
43	0.43006	SLV7-NL	Max	-3.411E-14	-556.4527	43-2	0.
43	0.86012	SLV7-NL	Max	-2.195E-14	-452.2811	43-2	0.43006
43	0.86012	SLV7-NL	Max	-3.041E-14	-452.2811	43-3	0.
43	1.29018	SLV7-NL	Max	-2.025E-14	-365.3502	43-3	0.43006
43	1.29018	SLV7-NL	Max	-2.719E-14	-365.3502	43-4	0.
43	1.50521	SLV7-NL	Max	-2.283E-14	-328.1402	43-4	0.21503
43	1.72024	SLV7-NL	Max	-1.897E-14	-294.9887	43-4	0.43006
43	1.72024	SLV7-NL	Max	-2.459E-14	-294.9887	43-5	0.
43	2.1503	SLV7-NL	Max	-1.824E-14	-240.5254	43-5	0.43006
43	2.1503	SLV7-NL	Max	-2.286E-14	-240.5254	43-6	0.
43	2.58036	SLV7-NL	Max	-1.832E-14	-201.2888	43-6	0.43006
43	2.58036	SLV7-NL	Max	-2.239E-14	-201.2888	43-7	0.
43	3.01042	SLV7-NL	Max	-1.963E-14	-176.6072	43-7	0.43006
43	0.	SLV7-NL	Min	-3.820E-14	-678.5359	43-1	0.
43	0.43006	SLV7-NL	Min	-2.396E-14	-556.4527	43-1	0.43006
43	0.43006	SLV7-NL	Min	-3.411E-14	-556.4527	43-2	0.
43	0.86012	SLV7-NL	Min	-2.195E-14	-452.2811	43-2	0.43006
43	0.86012	SLV7-NL	Min	-3.041E-14	-452.2811	43-3	0.
43	1.29018	SLV7-NL	Min	-2.025E-14	-365.3502	43-3	0.43006
43	1.29018	SLV7-NL	Min	-2.719E-14	-365.3502	43-4	0.
43	1.50521	SLV7-NL	Min	-2.283E-14	-328.1402	43-4	0.21503
43	1.72024	SLV7-NL	Min	-1.897E-14	-294.9887	43-4	0.43006
43	1.72024	SLV7-NL	Min	-2.459E-14	-294.9887	43-5	0.
43	2.1503	SLV7-NL	Min	-1.824E-14	-240.5254	43-5	0.43006
43	2.1503	SLV7-NL	Min	-2.286E-14	-240.5254	43-6	0.
43	2.58036	SLV7-NL	Min	-1.832E-14	-201.2888	43-6	0.43006
43	2.58036	SLV7-NL	Min	-2.239E-14	-201.2888	43-7	0.
43	3.01042	SLV7-NL	Min	-1.963E-14	-176.6072	43-7	0.43006
43	0.	SLV8-NL	Max	-3.765E-14	-671.7775	43-1	0.
43	0.43006	SLV8-NL	Max	-2.409E-14	-555.4187	43-1	0.43006
43	0.43006	SLV8-NL	Max	-3.388E-14	-555.363	43-2	0.
43	0.86012	SLV8-NL	Max	-2.230E-14	-456.0561	43-2	0.43006
43	0.86012	SLV8-NL	Max	-3.051E-14	-455.9961	43-3	0.
43	1.29018	SLV8-NL	Max	-2.085E-14	-373.2192	43-3	0.43006
43	1.29018	SLV8-NL	Max	-2.763E-14	-373.1553	43-4	0.
43	1.50521	SLV8-NL	Max	-2.353E-14	-338.0397	43-4	0.21503
43	1.72024	SLV8-NL	Max	-1.985E-14	-306.3723	43-4	0.43006
43	1.72024	SLV8-NL	Max	-2.542E-14	-306.3051	43-5	0.
43	2.1503	SLV8-NL	Max	-1.946E-14	-254.9661	43-5	0.43006
43	2.1503	SLV8-NL	Max	-2.415E-14	-254.896	43-6	0.
43	2.58036	SLV8-NL	Max	-1.996E-14	-218.4371	43-6	0.43006
43	2.58036	SLV8-NL	Max	-2.427E-14	-218.3646	43-7	0.
43	3.01042	SLV8-NL	Max	-2.184E-14	-196.2079	43-7	0.43006
43	0.	SLV8-NL	Min	-3.765E-14	-671.7775	43-1	0.
43	0.43006	SLV8-NL	Min	-2.409E-14	-555.4187	43-1	0.43006
43	0.43006	SLV8-NL	Min	-3.388E-14	-555.363	43-2	0.
43	0.86012	SLV8-NL	Min	-2.230E-14	-456.0561	43-2	0.43006
43	0.86012	SLV8-NL	Min	-3.051E-14	-455.9961	43-3	0.
43	1.29018	SLV8-NL	Min	-2.085E-14	-373.2192	43-3	0.43006

Table: Element Forces - Frames, Part 2 of 2

Frame	Station	OutputCase	StepType	M2	M3	FrameElem	ElemStation
	m			KN-m	KN-m		m
43	1.29018	SLV8-NL	Min	-2.763E-14	-373.1553	43-4	0.
43	1.50521	SLV8-NL	Min	-2.353E-14	-338.0397	43-4	0.21503
43	1.72024	SLV8-NL	Min	-1.985E-14	-306.3723	43-4	0.43006
43	1.72024	SLV8-NL	Min	-2.542E-14	-306.3051	43-5	0.
43	2.1503	SLV8-NL	Min	-1.946E-14	-254.9661	43-5	0.43006
43	2.1503	SLV8-NL	Min	-2.415E-14	-254.896	43-6	0.
43	2.58036	SLV8-NL	Min	-1.996E-14	-218.4371	43-6	0.43006
43	2.58036	SLV8-NL	Min	-2.427E-14	-218.3646	43-7	0.
43	3.01042	SLV8-NL	Min	-2.184E-14	-196.2079	43-7	0.43006
43	0.	SLV9-NL	Max	-3.925E-14	-689.3731	43-1	0.
43	0.43006	SLV9-NL	Max	-2.327E-14	-552.526	43-1	0.43006
43	0.43006	SLV9-NL	Max	-3.432E-14	-552.526	43-2	0.
43	0.86012	SLV9-NL	Max	-2.059E-14	-435.1933	43-2	0.43006
43	0.86012	SLV9-NL	Max	-2.969E-14	-435.1933	43-3	0.
43	1.29018	SLV9-NL	Max	-1.816E-14	-336.7522	43-3	0.43006
43	1.29018	SLV9-NL	Max	-2.545E-14	-336.7522	43-4	0.
43	1.50521	SLV9-NL	Max	-2.047E-14	-294.4215	43-4	0.21503
43	1.72024	SLV9-NL	Max	-1.604E-14	-256.5799	43-4	0.43006
43	1.72024	SLV9-NL	Max	-2.170E-14	-256.5799	43-5	0.
43	2.1503	SLV9-NL	Max	-1.435E-14	-194.0537	43-5	0.43006
43	2.1503	SLV9-NL	Max	-1.863E-14	-194.0537	43-6	0.
43	2.58036	SLV9-NL	Max	-1.329E-14	-148.5504	43-6	0.43006
43	2.58036	SLV9-NL	Max	-1.657E-14	-148.5504	43-7	0.
43	3.01042	SLV9-NL	Max	-1.320E-14	-119.447	43-7	0.43006
43	0.	SLV9-NL	Min	-3.925E-14	-689.3731	43-1	0.
43	0.43006	SLV9-NL	Min	-2.327E-14	-552.526	43-1	0.43006
43	0.43006	SLV9-NL	Min	-3.432E-14	-552.526	43-2	0.
43	0.86012	SLV9-NL	Min	-2.059E-14	-435.1933	43-2	0.43006
43	0.86012	SLV9-NL	Min	-2.969E-14	-435.1933	43-3	0.
43	1.29018	SLV9-NL	Min	-1.816E-14	-336.7522	43-3	0.43006
43	1.29018	SLV9-NL	Min	-2.545E-14	-336.7522	43-4	0.
43	1.50521	SLV9-NL	Min	-2.047E-14	-294.4215	43-4	0.21503
43	1.72024	SLV9-NL	Min	-1.604E-14	-256.5799	43-4	0.43006
43	1.72024	SLV9-NL	Min	-2.170E-14	-256.5799	43-5	0.
43	2.1503	SLV9-NL	Min	-1.435E-14	-194.0537	43-5	0.43006
43	2.1503	SLV9-NL	Min	-1.863E-14	-194.0537	43-6	0.
43	2.58036	SLV9-NL	Min	-1.329E-14	-148.5504	43-6	0.43006
43	2.58036	SLV9-NL	Min	-1.657E-14	-148.5504	43-7	0.
43	3.01042	SLV9-NL	Min	-1.320E-14	-119.447	43-7	0.43006
43	0.	SLV10-NL	Max	-3.630E-14	-652.4905	43-1	0.
43	0.43006	SLV10-NL	Max	-2.403E-14	-547.1073	43-1	0.43006
43	0.43006	SLV10-NL	Max	-3.312E-14	-547.0511	43-2	0.
43	0.86012	SLV10-NL	Max	-2.265E-14	-457.1176	43-2	0.43006
43	0.86012	SLV10-NL	Max	-3.034E-14	-457.0548	43-3	0.
43	1.29018	SLV10-NL	Max	-2.161E-14	-382.0666	43-3	0.43006
43	1.29018	SLV10-NL	Max	-2.809E-14	-381.9977	43-4	0.
43	1.50521	SLV10-NL	Max	-2.438E-14	-350.208	43-4	0.21503
43	1.72024	SLV10-NL	Max	-2.105E-14	-321.436	43-4	0.43006
43	1.72024	SLV10-NL	Max	-2.652E-14	-321.3615	43-5	0.
43	2.1503	SLV10-NL	Max	-2.113E-14	-274.6931	43-5	0.43006
43	2.1503	SLV10-NL	Max	-2.593E-14	-274.6135	43-6	0.
43	2.58036	SLV10-NL	Max	-2.215E-14	-241.2907	43-6	0.43006
43	2.58036	SLV10-NL	Max	-2.679E-14	-241.2065	43-7	0.
43	3.01042	SLV10-NL	Max	-2.458E-14	-220.6656	43-7	0.43006

Table: Element Forces - Frames, Part 2 of 2

Frame	Station	OutputCase	StepType	M2	M3	FrameElem	ElemStation
	m			KN-m	KN-m		m
43	0.	SLV10-NL	Min	-3.630E-14	-652.4905	43-1	0.
43	0.43006	SLV10-NL	Min	-2.403E-14	-547.1073	43-1	0.43006
43	0.43006	SLV10-NL	Min	-3.312E-14	-547.0511	43-2	0.
43	0.86012	SLV10-NL	Min	-2.265E-14	-457.1176	43-2	0.43006
43	0.86012	SLV10-NL	Min	-3.034E-14	-457.0548	43-3	0.
43	1.29018	SLV10-NL	Min	-2.161E-14	-382.0666	43-3	0.43006
43	1.29018	SLV10-NL	Min	-2.809E-14	-381.9977	43-4	0.
43	1.50521	SLV10-NL	Min	-2.438E-14	-350.208	43-4	0.21503
43	1.72024	SLV10-NL	Min	-2.105E-14	-321.436	43-4	0.43006
43	1.72024	SLV10-NL	Min	-2.652E-14	-321.3615	43-5	0.
43	2.1503	SLV10-NL	Min	-2.113E-14	-274.6931	43-5	0.43006
43	2.1503	SLV10-NL	Min	-2.593E-14	-274.6135	43-6	0.
43	2.58036	SLV10-NL	Min	-2.215E-14	-241.2907	43-6	0.43006
43	2.58036	SLV10-NL	Min	-2.679E-14	-241.2065	43-7	0.
43	3.01042	SLV10-NL	Min	-2.458E-14	-220.6656	43-7	0.43006
43	0.	SLV11-NL	Max	-4.008E-14	-705.8304	43-1	0.
43	0.43006	SLV11-NL	Max	-2.408E-14	-568.7868	43-1	0.43006
43	0.43006	SLV11-NL	Max	-3.522E-14	-568.7868	43-2	0.
43	0.86012	SLV11-NL	Max	-2.148E-14	-451.2571	43-2	0.43006
43	0.86012	SLV11-NL	Max	-3.069E-14	-451.2571	43-3	0.
43	1.29018	SLV11-NL	Max	-1.914E-14	-352.6185	43-3	0.43006
43	1.29018	SLV11-NL	Max	-2.655E-14	-352.6185	43-4	0.
43	1.50521	SLV11-NL	Max	-2.157E-14	-310.189	43-4	0.21503
43	1.72024	SLV11-NL	Max	-1.713E-14	-272.2485	43-4	0.43006
43	1.72024	SLV11-NL	Max	-2.295E-14	-272.2485	43-5	0.
43	2.1503	SLV11-NL	Max	-1.559E-14	-209.524	43-5	0.43006
43	2.1503	SLV11-NL	Max	-2.007E-14	-209.524	43-6	0.
43	2.58036	SLV11-NL	Max	-1.472E-14	-163.8221	43-6	0.43006
43	2.58036	SLV11-NL	Max	-1.826E-14	-163.8221	43-7	0.
43	3.01042	SLV11-NL	Max	-1.489E-14	-134.5195	43-7	0.43006
43	0.	SLV11-NL	Min	-4.008E-14	-705.8304	43-1	0.
43	0.43006	SLV11-NL	Min	-2.408E-14	-568.7868	43-1	0.43006
43	0.43006	SLV11-NL	Min	-3.522E-14	-568.7868	43-2	0.
43	0.86012	SLV11-NL	Min	-2.148E-14	-451.2571	43-2	0.43006
43	0.86012	SLV11-NL	Min	-3.069E-14	-451.2571	43-3	0.
43	1.29018	SLV11-NL	Min	-1.914E-14	-352.6185	43-3	0.43006
43	1.29018	SLV11-NL	Min	-2.655E-14	-352.6185	43-4	0.
43	1.50521	SLV11-NL	Min	-2.157E-14	-310.189	43-4	0.21503
43	1.72024	SLV11-NL	Min	-1.713E-14	-272.2485	43-4	0.43006
43	1.72024	SLV11-NL	Min	-2.295E-14	-272.2485	43-5	0.
43	2.1503	SLV11-NL	Min	-1.559E-14	-209.524	43-5	0.43006
43	2.1503	SLV11-NL	Min	-2.007E-14	-209.524	43-6	0.
43	2.58036	SLV11-NL	Min	-1.472E-14	-163.8221	43-6	0.43006
43	2.58036	SLV11-NL	Min	-1.826E-14	-163.8221	43-7	0.
43	3.01042	SLV11-NL	Min	-1.489E-14	-134.5195	43-7	0.43006
43	0.	SLV12-NL	Max	-3.714E-14	-669.1151	43-1	0.
43	0.43006	SLV12-NL	Max	-2.485E-14	-563.5153	43-1	0.43006
43	0.43006	SLV12-NL	Max	-3.403E-14	-563.4579	43-2	0.
43	0.86012	SLV12-NL	Max	-2.354E-14	-473.2957	43-2	0.43006
43	0.86012	SLV12-NL	Max	-3.135E-14	-473.2314	43-3	0.
43	1.29018	SLV12-NL	Max	-2.260E-14	-398.0075	43-3	0.43006
43	1.29018	SLV12-NL	Max	-2.920E-14	-397.9368	43-4	0.
43	1.50521	SLV12-NL	Max	-2.549E-14	-366.0282	43-4	0.21503
43	1.72024	SLV12-NL	Max	-2.214E-14	-337.1371	43-4	0.43006

Table: Element Forces - Frames, Part 2 of 2

Frame	Station	OutputCase	StepType	M2	M3	FrameElem	ElemStation
	m			KN-m	KN-m		m
43	1.72024	SLV12-NL	Max	-2.778E-14	-337.0605	43-5	0.
43	2.1503	SLV12-NL	Max	-2.237E-14	-290.1557	43-5	0.43006
43	2.1503	SLV12-NL	Max	-2.737E-14	-290.0738	43-6	0.
43	2.58036	SLV12-NL	Max	-2.357E-14	-256.5195	43-6	0.43006
43	2.58036	SLV12-NL	Max	-2.848E-14	-256.4328	43-7	0.
43	3.01042	SLV12-NL	Max	-2.626E-14	-235.6677	43-7	0.43006
43	0.	SLV12-NL	Min	-3.714E-14	-669.1151	43-1	0.
43	0.43006	SLV12-NL	Min	-2.485E-14	-563.5153	43-1	0.43006
43	0.43006	SLV12-NL	Min	-3.403E-14	-563.4579	43-2	0.
43	0.86012	SLV12-NL	Min	-2.354E-14	-473.2957	43-2	0.43006
43	0.86012	SLV12-NL	Min	-3.135E-14	-473.2314	43-3	0.
43	1.29018	SLV12-NL	Min	-2.260E-14	-398.0075	43-3	0.43006
43	1.29018	SLV12-NL	Min	-2.920E-14	-397.9368	43-4	0.
43	1.50521	SLV12-NL	Min	-2.549E-14	-366.0282	43-4	0.21503
43	1.72024	SLV12-NL	Min	-2.214E-14	-337.1371	43-4	0.43006
43	1.72024	SLV12-NL	Min	-2.778E-14	-337.0605	43-5	0.
43	2.1503	SLV12-NL	Min	-2.237E-14	-290.1557	43-5	0.43006
43	2.1503	SLV12-NL	Min	-2.737E-14	-290.0738	43-6	0.
43	2.58036	SLV12-NL	Min	-2.357E-14	-256.5195	43-6	0.43006
43	2.58036	SLV12-NL	Min	-2.848E-14	-256.4328	43-7	0.
43	3.01042	SLV12-NL	Min	-2.626E-14	-235.6677	43-7	0.43006
43	0.	SLV13-NL	Max	-3.680E-14	-652.4409	43-1	0.
43	0.43006	SLV13-NL	Max	-2.286E-14	-532.9787	43-1	0.43006
43	0.43006	SLV13-NL	Max	-3.274E-14	-532.9787	43-2	0.
43	0.86012	SLV13-NL	Max	-2.084E-14	-431.0354	43-2	0.43006
43	0.86012	SLV13-NL	Max	-2.905E-14	-431.0354	43-3	0.
43	1.29018	SLV13-NL	Max	-1.910E-14	-345.9623	43-3	0.43006
43	1.29018	SLV13-NL	Max	-2.580E-14	-345.9623	43-4	0.
43	1.50521	SLV13-NL	Max	-2.153E-14	-309.5493	43-4	0.21503
43	1.72024	SLV13-NL	Max	-1.775E-14	-277.1105	43-4	0.43006
43	1.72024	SLV13-NL	Max	-2.314E-14	-277.1105	43-5	0.
43	2.1503	SLV13-NL	Max	-1.693E-14	-223.831	43-5	0.43006
43	2.1503	SLV13-NL	Max	-2.130E-14	-223.8309	43-6	0.
43	2.58036	SLV13-NL	Max	-1.685E-14	-185.476	43-6	0.43006
43	2.58036	SLV13-NL	Max	-2.064E-14	-185.476	43-7	0.
43	3.01042	SLV13-NL	Max	-1.793E-14	-161.3948	43-7	0.43006
43	0.	SLV13-NL	Min	-3.680E-14	-652.4409	43-1	0.
43	0.43006	SLV13-NL	Min	-2.286E-14	-532.9787	43-1	0.43006
43	0.43006	SLV13-NL	Min	-3.274E-14	-532.9787	43-2	0.
43	0.86012	SLV13-NL	Min	-2.084E-14	-431.0354	43-2	0.43006
43	0.86012	SLV13-NL	Min	-2.905E-14	-431.0354	43-3	0.
43	1.29018	SLV13-NL	Min	-1.910E-14	-345.9623	43-3	0.43006
43	1.29018	SLV13-NL	Min	-2.580E-14	-345.9623	43-4	0.
43	1.50521	SLV13-NL	Min	-2.153E-14	-309.5493	43-4	0.21503
43	1.72024	SLV13-NL	Min	-1.775E-14	-277.1105	43-4	0.43006
43	1.72024	SLV13-NL	Min	-2.314E-14	-277.1105	43-5	0.
43	2.1503	SLV13-NL	Min	-1.693E-14	-223.831	43-5	0.43006
43	2.1503	SLV13-NL	Min	-2.130E-14	-223.8309	43-6	0.
43	2.58036	SLV13-NL	Min	-1.685E-14	-185.476	43-6	0.43006
43	2.58036	SLV13-NL	Min	-2.064E-14	-185.476	43-7	0.
43	3.01042	SLV13-NL	Min	-1.793E-14	-161.3948	43-7	0.43006
43	0.	SLV14-NL	Max	-3.601E-14	-642.9188	43-1	0.
43	0.43006	SLV14-NL	Max	-2.314E-14	-532.4897	43-1	0.43006
43	0.43006	SLV14-NL	Max	-3.246E-14	-532.4761	43-2	0.

Table: Element Forces - Frames, Part 2 of 2

Frame	Station	OutputCase	StepType	M2	M3	FrameElem	ElemStation
	m			KN-m	KN-m		m
43	0.86012	SLV14-NL	Max	-2.147E-14	-438.273	43-2	0.43006
43	0.86012	SLV14-NL	Max	-2.930E-14	-438.2558	43-3	0.
43	1.29018	SLV14-NL	Max	-2.014E-14	-359.7173	43-3	0.43006
43	1.29018	SLV14-NL	Max	-2.661E-14	-359.6969	43-4	0.
43	1.50521	SLV14-NL	Max	-2.270E-14	-326.206	43-4	0.21503
43	1.72024	SLV14-NL	Max	-1.922E-14	-296.2478	43-4	0.43006
43	1.72024	SLV14-NL	Max	-2.457E-14	-296.2247	43-5	0.
43	2.1503	SLV14-NL	Max	-1.889E-14	-247.2764	43-5	0.43006
43	2.1503	SLV14-NL	Max	-2.342E-14	-247.251	43-6	0.
43	2.58036	SLV14-NL	Max	-1.940E-14	-212.2016	43-6	0.43006
43	2.58036	SLV14-NL	Max	-2.358E-14	-212.1744	43-7	0.
43	3.01042	SLV14-NL	Max	-2.119E-14	-190.408	43-7	0.43006
43	0.	SLV14-NL	Min	-3.601E-14	-642.9188	43-1	0.
43	0.43006	SLV14-NL	Min	-2.314E-14	-532.4897	43-1	0.43006
43	0.43006	SLV14-NL	Min	-3.246E-14	-532.4761	43-2	0.
43	0.86012	SLV14-NL	Min	-2.147E-14	-438.273	43-2	0.43006
43	0.86012	SLV14-NL	Min	-2.930E-14	-438.2558	43-3	0.
43	1.29018	SLV14-NL	Min	-2.014E-14	-359.7173	43-3	0.43006
43	1.29018	SLV14-NL	Min	-2.661E-14	-359.6969	43-4	0.
43	1.50521	SLV14-NL	Min	-2.270E-14	-326.206	43-4	0.21503
43	1.72024	SLV14-NL	Min	-1.922E-14	-296.2478	43-4	0.43006
43	1.72024	SLV14-NL	Min	-2.457E-14	-296.2247	43-5	0.
43	2.1503	SLV14-NL	Min	-1.889E-14	-247.2764	43-5	0.43006
43	2.1503	SLV14-NL	Min	-2.342E-14	-247.251	43-6	0.
43	2.58036	SLV14-NL	Min	-1.940E-14	-212.2016	43-6	0.43006
43	2.58036	SLV14-NL	Min	-2.358E-14	-212.1744	43-7	0.
43	3.01042	SLV14-NL	Min	-2.119E-14	-190.408	43-7	0.43006
43	0.	SLV15-NL	Max	-3.960E-14	-707.5534	43-1	0.
43	0.43006	SLV15-NL	Max	-2.554E-14	-586.9862	43-1	0.43006
43	0.43006	SLV15-NL	Max	-3.576E-14	-586.9862	43-2	0.
43	0.86012	SLV15-NL	Max	-2.374E-14	-483.9365	43-2	0.43006
43	0.86012	SLV15-NL	Max	-3.233E-14	-483.9355	43-3	0.
43	1.29018	SLV15-NL	Max	-2.229E-14	-397.7824	43-3	0.43006
43	1.29018	SLV15-NL	Max	-2.943E-14	-397.7797	43-4	0.
43	1.50521	SLV15-NL	Max	-2.511E-14	-360.8637	43-4	0.21503
43	1.72024	SLV15-NL	Max	-2.129E-14	-327.9214	43-4	0.43006
43	1.72024	SLV15-NL	Max	-2.720E-14	-327.9176	43-5	0.
43	2.1503	SLV15-NL	Max	-2.091E-14	-273.7372	43-5	0.43006
43	2.1503	SLV15-NL	Max	-2.593E-14	-273.7327	43-6	0.
43	2.58036	SLV15-NL	Max	-2.144E-14	-234.5987	43-6	0.43006
43	2.58036	SLV15-NL	Max	-2.608E-14	-234.5941	43-7	0.
43	3.01042	SLV15-NL	Max	-2.335E-14	-209.8594	43-7	0.43006
43	0.	SLV15-NL	Min	-3.960E-14	-707.5534	43-1	0.
43	0.43006	SLV15-NL	Min	-2.554E-14	-586.9862	43-1	0.43006
43	0.43006	SLV15-NL	Min	-3.576E-14	-586.9862	43-2	0.
43	0.86012	SLV15-NL	Min	-2.374E-14	-483.9365	43-2	0.43006
43	0.86012	SLV15-NL	Min	-3.233E-14	-483.9355	43-3	0.
43	1.29018	SLV15-NL	Min	-2.229E-14	-397.7824	43-3	0.43006
43	1.29018	SLV15-NL	Min	-2.943E-14	-397.7797	43-4	0.
43	1.50521	SLV15-NL	Min	-2.511E-14	-360.8637	43-4	0.21503
43	1.72024	SLV15-NL	Min	-2.129E-14	-327.9214	43-4	0.43006
43	1.72024	SLV15-NL	Min	-2.720E-14	-327.9176	43-5	0.
43	2.1503	SLV15-NL	Min	-2.091E-14	-273.7372	43-5	0.43006
43	2.1503	SLV15-NL	Min	-2.593E-14	-273.7327	43-6	0.

Table: Element Forces - Frames, Part 2 of 2

Frame	Station	OutputCase	StepType	M2	M3	FrameElem	ElemStation
	m			KN-m	KN-m		m
43	2.58036	SLV15-NL	Min	-2.144E-14	-234.5987	43-6	0.43006
43	2.58036	SLV15-NL	Min	-2.608E-14	-234.5941	43-7	0.
43	3.01042	SLV15-NL	Min	-2.335E-14	-209.8594	43-7	0.43006
43	0.	SLV16-NL	Max	-3.883E-14	-698.513	43-1	0.
43	0.43006	SLV16-NL	Max	-2.583E-14	-586.8652	43-1	0.43006
43	0.43006	SLV16-NL	Max	-3.550E-14	-586.849	43-2	0.
43	0.86012	SLV16-NL	Max	-2.439E-14	-491.462	43-2	0.43006
43	0.86012	SLV16-NL	Max	-3.260E-14	-491.4413	43-3	0.
43	1.29018	SLV16-NL	Max	-2.333E-14	-411.7686	43-3	0.43006
43	1.29018	SLV16-NL	Max	-3.026E-14	-411.744	43-4	0.
43	1.50521	SLV16-NL	Max	-2.630E-14	-377.7176	43-4	0.21503
43	1.72024	SLV16-NL	Max	-2.277E-14	-347.2236	43-4	0.43006
43	1.72024	SLV16-NL	Max	-2.865E-14	-347.1957	43-5	0.
43	2.1503	SLV16-NL	Max	-2.288E-14	-297.2501	43-5	0.43006
43	2.1503	SLV16-NL	Max	-2.807E-14	-297.2194	43-6	0.
43	2.58036	SLV16-NL	Max	-2.398E-14	-261.2554	43-6	0.43006
43	2.58036	SLV16-NL	Max	-2.902E-14	-261.2225	43-7	0.
43	3.01042	SLV16-NL	Max	-2.658E-14	-238.6298	43-7	0.43006
43	0.	SLV16-NL	Min	-3.883E-14	-698.513	43-1	0.
43	0.43006	SLV16-NL	Min	-2.583E-14	-586.8652	43-1	0.43006
43	0.43006	SLV16-NL	Min	-3.550E-14	-586.849	43-2	0.
43	0.86012	SLV16-NL	Min	-2.439E-14	-491.462	43-2	0.43006
43	0.86012	SLV16-NL	Min	-3.260E-14	-491.4413	43-3	0.
43	1.29018	SLV16-NL	Min	-2.333E-14	-411.7686	43-3	0.43006
43	1.29018	SLV16-NL	Min	-3.026E-14	-411.744	43-4	0.
43	1.50521	SLV16-NL	Min	-2.630E-14	-377.7176	43-4	0.21503
43	1.72024	SLV16-NL	Min	-2.277E-14	-347.2236	43-4	0.43006
43	1.72024	SLV16-NL	Min	-2.865E-14	-347.1957	43-5	0.
43	2.1503	SLV16-NL	Min	-2.288E-14	-297.2501	43-5	0.43006
43	2.1503	SLV16-NL	Min	-2.807E-14	-297.2194	43-6	0.
43	2.58036	SLV16-NL	Min	-2.398E-14	-261.2554	43-6	0.43006
43	2.58036	SLV16-NL	Min	-2.902E-14	-261.2225	43-7	0.
43	3.01042	SLV16-NL	Min	-2.658E-14	-238.6298	43-7	0.43006
44	0.	SLU 1-NL	Max	-3.475E-14	-313.068	44-1	0.
44	0.4734	SLU 1-NL	Max	-3.267E-14	-300.341	44-1	0.4734
44	0.4734	SLU 1-NL	Max	-2.700E-14	-300.2999	44-2	0.
44	0.94681	SLU 1-NL	Max	-2.776E-14	-309.6513	44-2	0.4734
44	0.94681	SLU 1-NL	Max	-2.289E-14	-309.6118	44-3	0.
44	1.42021	SLU 1-NL	Max	-2.621E-14	-339.7956	44-3	0.4734
44	1.42021	SLU 1-NL	Max	-2.093E-14	-339.7587	44-4	0.
44	1.89361	SLU 1-NL	Max	-2.657E-14	-389.5042	44-4	0.4734
44	1.89361	SLU 1-NL	Max	-2.029E-14	-389.4708	44-5	0.
44	2.36702	SLU 1-NL	Max	-2.808E-14	-457.4869	44-5	0.4734
44	2.36702	SLU 1-NL	Max	-2.050E-14	-457.4578	44-6	0.
44	2.84042	SLU 1-NL	Max	-3.026E-14	-542.4342	44-6	0.4734
44	0.	SLU 1-NL	Min	-3.475E-14	-313.068	44-1	0.
44	0.4734	SLU 1-NL	Min	-3.267E-14	-300.341	44-1	0.4734
44	0.4734	SLU 1-NL	Min	-2.700E-14	-300.2999	44-2	0.
44	0.94681	SLU 1-NL	Min	-2.776E-14	-309.6513	44-2	0.4734
44	0.94681	SLU 1-NL	Min	-2.289E-14	-309.6118	44-3	0.
44	1.42021	SLU 1-NL	Min	-2.621E-14	-339.7956	44-3	0.4734
44	1.42021	SLU 1-NL	Min	-2.093E-14	-339.7587	44-4	0.
44	1.89361	SLU 1-NL	Min	-2.657E-14	-389.5042	44-4	0.4734
44	1.89361	SLU 1-NL	Min	-2.029E-14	-389.4708	44-5	0.

Table: Element Forces - Frames, Part 2 of 2

Frame	Station	OutputCase	StepType	M2	M3	FrameElem	ElemStation
	m			KN-m	KN-m		m
44	2.36702	SLU 1-NL	Min	-2.808E-14	-457.4869	44-5	0.4734
44	2.36702	SLU 1-NL	Min	-2.050E-14	-457.4578	44-6	0.
44	2.84042	SLU 1-NL	Min	-3.026E-14	-542.4342	44-6	0.4734
44	0.	SLU 2-NL	Max	-5.291E-14	-477.4336	44-1	0.
44	0.4734	SLU 2-NL	Max	-5.077E-14	-466.6155	44-1	0.4734
44	0.4734	SLU 2-NL	Max	-4.206E-14	-466.5551	44-2	0.
44	0.94681	SLU 2-NL	Max	-4.205E-14	-471.1492	44-2	0.4734
44	0.94681	SLU 2-NL	Max	-3.537E-14	-471.0911	44-3	0.
44	1.42021	SLU 2-NL	Max	-3.722E-14	-490.1157	44-3	0.4734
44	1.42021	SLU 2-NL	Max	-3.117E-14	-490.0617	44-4	0.
44	1.89361	SLU 2-NL	Max	-3.468E-14	-522.4959	44-4	0.4734
44	1.89361	SLU 2-NL	Max	-2.856E-14	-522.4473	44-5	0.
44	2.36702	SLU 2-NL	Max	-3.356E-14	-567.2393	44-5	0.4734
44	2.36702	SLU 2-NL	Max	-2.700E-14	-567.1973	44-6	0.
44	2.84042	SLU 2-NL	Max	-3.333E-14	-623.2684	44-6	0.4734
44	0.	SLU 2-NL	Min	-5.291E-14	-477.4336	44-1	0.
44	0.4734	SLU 2-NL	Min	-5.077E-14	-466.6155	44-1	0.4734
44	0.4734	SLU 2-NL	Min	-4.206E-14	-466.5551	44-2	0.
44	0.94681	SLU 2-NL	Min	-4.205E-14	-471.1492	44-2	0.4734
44	0.94681	SLU 2-NL	Min	-3.537E-14	-471.0911	44-3	0.
44	1.42021	SLU 2-NL	Min	-3.722E-14	-490.1157	44-3	0.4734
44	1.42021	SLU 2-NL	Min	-3.117E-14	-490.0617	44-4	0.
44	1.89361	SLU 2-NL	Min	-3.468E-14	-522.4959	44-4	0.4734
44	1.89361	SLU 2-NL	Min	-2.856E-14	-522.4473	44-5	0.
44	2.36702	SLU 2-NL	Min	-3.356E-14	-567.2393	44-5	0.4734
44	2.36702	SLU 2-NL	Min	-2.700E-14	-567.1973	44-6	0.
44	2.84042	SLU 2-NL	Min	-3.333E-14	-623.2684	44-6	0.4734
44	0.	SLU 3-NL	Max	-3.189E-15	-27.8053	44-1	0.
44	0.4734	SLU 3-NL	Max	-1.657E-15	-15.4968	44-1	0.4734
44	0.4734	SLU 3-NL	Max	-1.309E-15	-15.4928	44-2	0.
44	0.94681	SLU 3-NL	Max	-2.367E-15	-24.4884	44-2	0.4734
44	0.94681	SLU 3-NL	Max	-1.284E-15	-24.4846	44-3	0.
44	1.42021	SLU 3-NL	Max	-4.714E-15	-53.5651	44-3	0.4734
44	1.42021	SLU 3-NL	Max	-2.291E-15	-53.5614	44-4	0.
44	1.89361	SLU 3-NL	Max	-7.914E-15	-101.5077	44-4	0.4734
44	1.89361	SLU 3-NL	Max	-3.894E-15	-101.5042	44-5	0.
44	2.36702	SLU 3-NL	Max	-1.155E-14	-167.0958	44-5	0.4734
44	2.36702	SLU 3-NL	Max	-5.846E-15	-167.0925	44-6	0.
44	2.84042	SLU 3-NL	Max	-1.538E-14	-249.1051	44-6	0.4734
44	0.	SLU 3-NL	Min	-3.189E-15	-27.8053	44-1	0.
44	0.4734	SLU 3-NL	Min	-1.657E-15	-15.4968	44-1	0.4734
44	0.4734	SLU 3-NL	Min	-1.309E-15	-15.4928	44-2	0.
44	0.94681	SLU 3-NL	Min	-2.367E-15	-24.4884	44-2	0.4734
44	0.94681	SLU 3-NL	Min	-1.284E-15	-24.4846	44-3	0.
44	1.42021	SLU 3-NL	Min	-4.714E-15	-53.5651	44-3	0.4734
44	1.42021	SLU 3-NL	Min	-2.291E-15	-53.5614	44-4	0.
44	1.89361	SLU 3-NL	Min	-7.914E-15	-101.5077	44-4	0.4734
44	1.89361	SLU 3-NL	Min	-3.894E-15	-101.5042	44-5	0.
44	2.36702	SLU 3-NL	Min	-1.155E-14	-167.0958	44-5	0.4734
44	2.36702	SLU 3-NL	Min	-5.846E-15	-167.0925	44-6	0.
44	2.84042	SLU 3-NL	Min	-1.538E-14	-249.1051	44-6	0.4734
44	0.	SLU 4-NL	Max	-3.629E-14	-326.8382	44-1	0.
44	0.4734	SLU 4-NL	Max	-3.386E-14	-311.4181	44-1	0.4734
44	0.4734	SLU 4-NL	Max	-2.806E-14	-311.4181	44-2	0.

Table: Element Forces - Frames, Part 2 of 2

Frame	Station	OutputCase	StepType	M2	M3	FrameElem	ElemStation
	m			KN-m	KN-m		m
44	0.94681	SLU 4-NL	Max	-2.838E-14	-317.1571	44-2	0.4734
44	0.94681	SLU 4-NL	Max	-2.357E-14	-317.1571	44-3	0.
44	1.42021	SLU 4-NL	Max	-2.634E-14	-342.8449	44-3	0.4734
44	1.42021	SLU 4-NL	Max	-2.127E-14	-342.8449	44-4	0.
44	1.89361	SLU 4-NL	Max	-2.629E-14	-387.2697	44-4	0.4734
44	1.89361	SLU 4-NL	Max	-2.034E-14	-387.2697	44-5	0.
44	2.36702	SLU 4-NL	Max	-2.743E-14	-449.2188	44-5	0.4734
44	2.36702	SLU 4-NL	Max	-2.030E-14	-449.2188	44-6	0.
44	2.84042	SLU 4-NL	Max	-2.928E-14	-527.4794	44-6	0.4734
44	0.	SLU 4-NL	Min	-3.629E-14	-326.8382	44-1	0.
44	0.4734	SLU 4-NL	Min	-3.386E-14	-311.4181	44-1	0.4734
44	0.4734	SLU 4-NL	Min	-2.806E-14	-311.4181	44-2	0.
44	0.94681	SLU 4-NL	Min	-2.838E-14	-317.1571	44-2	0.4734
44	0.94681	SLU 4-NL	Min	-2.357E-14	-317.1571	44-3	0.
44	1.42021	SLU 4-NL	Min	-2.634E-14	-342.8449	44-3	0.4734
44	1.42021	SLU 4-NL	Min	-2.127E-14	-342.8449	44-4	0.
44	1.89361	SLU 4-NL	Min	-2.629E-14	-387.2697	44-4	0.4734
44	1.89361	SLU 4-NL	Min	-2.034E-14	-387.2697	44-5	0.
44	2.36702	SLU 4-NL	Min	-2.743E-14	-449.2188	44-5	0.4734
44	2.36702	SLU 4-NL	Min	-2.030E-14	-449.2188	44-6	0.
44	2.84042	SLU 4-NL	Min	-2.928E-14	-527.4794	44-6	0.4734
44	0.	SLU 5-NL	Max	-3.091E-15	-26.7021	44-1	0.
44	0.4734	SLU 5-NL	Max	-1.174E-15	-11.1874	44-1	0.4734
44	0.4734	SLU 5-NL	Max	-9.741E-16	-11.1874	44-2	0.
44	0.94681	SLU 5-NL	Max	-1.638E-15	-16.8447	44-2	0.4734
44	0.94681	SLU 5-NL	Max	-7.820E-16	-16.8447	44-3	0.
44	1.42021	SLU 5-NL	Max	-3.807E-15	-42.4601	44-3	0.4734
44	1.42021	SLU 5-NL	Max	-1.663E-15	-42.4601	44-4	0.
44	1.89361	SLU 5-NL	Max	-6.870E-15	-86.8191	44-4	0.4734
44	1.89361	SLU 5-NL	Max	-3.168E-15	-86.8191	44-5	0.
44	2.36702	SLU 5-NL	Max	-1.039E-14	-148.7076	44-5	0.4734
44	2.36702	SLU 5-NL	Max	-5.039E-15	-148.7076	44-6	0.
44	2.84042	SLU 5-NL	Max	-1.413E-14	-226.9113	44-6	0.4734
44	0.	SLU 5-NL	Min	-3.091E-15	-26.7021	44-1	0.
44	0.4734	SLU 5-NL	Min	-1.174E-15	-11.1874	44-1	0.4734
44	0.4734	SLU 5-NL	Min	-9.741E-16	-11.1874	44-2	0.
44	0.94681	SLU 5-NL	Min	-1.638E-15	-16.8447	44-2	0.4734
44	0.94681	SLU 5-NL	Min	-7.820E-16	-16.8447	44-3	0.
44	1.42021	SLU 5-NL	Min	-3.807E-15	-42.4601	44-3	0.4734
44	1.42021	SLU 5-NL	Min	-1.663E-15	-42.4601	44-4	0.
44	1.89361	SLU 5-NL	Min	-6.870E-15	-86.8191	44-4	0.4734
44	1.89361	SLU 5-NL	Min	-3.168E-15	-86.8191	44-5	0.
44	2.36702	SLU 5-NL	Min	-1.039E-14	-148.7076	44-5	0.4734
44	2.36702	SLU 5-NL	Min	-5.039E-15	-148.7076	44-6	0.
44	2.84042	SLU 5-NL	Min	-1.413E-14	-226.9113	44-6	0.4734
44	0.	SLU 6-NL	Max	-3.449E-14	-310.8329	44-1	0.
44	0.4734	SLU 6-NL	Max	-3.250E-14	-298.8801	44-1	0.4734
44	0.4734	SLU 6-NL	Max	-2.679E-14	-298.4752	44-2	0.
44	0.94681	SLU 6-NL	Max	-2.775E-14	-309.5216	44-2	0.4734
44	0.94681	SLU 6-NL	Max	-2.276E-14	-309.1108	44-3	0.
44	1.42021	SLU 6-NL	Max	-2.644E-14	-342.3565	44-3	0.4734
44	1.42021	SLU 6-NL	Max	-2.091E-14	-341.9409	44-4	0.
44	1.89361	SLU 6-NL	Max	-2.713E-14	-396.5618	44-4	0.4734
44	1.89361	SLU 6-NL	Max	-2.042E-14	-396.1422	44-5	0.

Table: Element Forces - Frames, Part 2 of 2

Frame	Station	OutputCase	StepType	M2	M3	FrameElem	ElemStation
	m			KN-m	KN-m		m
44	2.36702	SLU 6-NL	Max	-2.904E-14	-471.2936	44-5	0.4734
44	2.36702	SLU 6-NL	Max	-2.081E-14	-470.8709	44-6	0.
44	2.84042	SLU 6-NL	Max	-3.172E-14	-565.6889	44-6	0.4734
44	0.	SLU 6-NL	Min	-3.449E-14	-310.8329	44-1	0.
44	0.4734	SLU 6-NL	Min	-3.250E-14	-298.8801	44-1	0.4734
44	0.4734	SLU 6-NL	Min	-2.679E-14	-298.4752	44-2	0.
44	0.94681	SLU 6-NL	Min	-2.775E-14	-309.5216	44-2	0.4734
44	0.94681	SLU 6-NL	Min	-2.276E-14	-309.1108	44-3	0.
44	1.42021	SLU 6-NL	Min	-2.644E-14	-342.3565	44-3	0.4734
44	1.42021	SLU 6-NL	Min	-2.091E-14	-341.9409	44-4	0.
44	1.89361	SLU 6-NL	Min	-2.713E-14	-396.5618	44-4	0.4734
44	1.89361	SLU 6-NL	Min	-2.042E-14	-396.1422	44-5	0.
44	2.36702	SLU 6-NL	Min	-2.904E-14	-471.2936	44-5	0.4734
44	2.36702	SLU 6-NL	Min	-2.081E-14	-470.8709	44-6	0.
44	2.84042	SLU 6-NL	Min	-3.172E-14	-565.6889	44-6	0.4734
44	0.	SLU 7-NL	Max	-1.446E-15	-12.1573	44-1	0.
44	0.4734	SLU 7-NL	Max	-1.637E-17	-0.4759	44-1	0.4734
44	0.4734	SLU 7-NL	Max	1.233E-16	-0.2073	44-2	0.
44	0.94681	SLU 7-NL	Max	-1.206E-15	-11.3245	44-2	0.4734
44	0.94681	SLU 7-NL	Max	-1.483E-16	-11.0508	44-3	0.
44	1.42021	SLU 7-NL	Max	-4.072E-15	-44.1988	44-3	0.4734
44	1.42021	SLU 7-NL	Max	-1.457E-15	-43.92	44-4	0.
44	1.89361	SLU 7-NL	Max	-7.849E-15	-98.3322	44-4	0.4734
44	1.89361	SLU 7-NL	Max	-3.379E-15	-98.0483	44-5	0.
44	2.36702	SLU 7-NL	Max	-1.213E-14	-172.9576	44-5	0.4734
44	2.36702	SLU 7-NL	Max	-5.673E-15	-172.6687	44-6	0.
44	2.84042	SLU 7-NL	Max	-1.668E-14	-267.3046	44-6	0.4734
44	0.	SLU 7-NL	Min	-1.446E-15	-12.1573	44-1	0.
44	0.4734	SLU 7-NL	Min	-1.637E-17	-0.4759	44-1	0.4734
44	0.4734	SLU 7-NL	Min	1.233E-16	-0.2073	44-2	0.
44	0.94681	SLU 7-NL	Min	-1.206E-15	-11.3245	44-2	0.4734
44	0.94681	SLU 7-NL	Min	-1.483E-16	-11.0508	44-3	0.
44	1.42021	SLU 7-NL	Min	-4.072E-15	-44.1988	44-3	0.4734
44	1.42021	SLU 7-NL	Min	-1.457E-15	-43.92	44-4	0.
44	1.89361	SLU 7-NL	Min	-7.849E-15	-98.3322	44-4	0.4734
44	1.89361	SLU 7-NL	Min	-3.379E-15	-98.0483	44-5	0.
44	2.36702	SLU 7-NL	Min	-1.213E-14	-172.9576	44-5	0.4734
44	2.36702	SLU 7-NL	Min	-5.673E-15	-172.6687	44-6	0.
44	2.84042	SLU 7-NL	Min	-1.668E-14	-267.3046	44-6	0.4734
44	0.	SLE-C-NL	Max	-2.602E-14	-234.3733	44-1	0.
44	0.4734	SLE-C-NL	Max	-2.442E-14	-224.4858	44-1	0.4734
44	0.4734	SLE-C-NL	Max	-2.019E-14	-224.4625	44-2	0.
44	0.94681	SLE-C-NL	Max	-2.073E-14	-231.2481	44-2	0.4734
44	0.94681	SLE-C-NL	Max	-1.710E-14	-231.2258	44-3	0.
44	1.42021	SLE-C-NL	Max	-1.957E-14	-253.7258	44-3	0.4734
44	1.42021	SLE-C-NL	Max	-1.562E-14	-253.7049	44-4	0.
44	1.89361	SLE-C-NL	Max	-1.985E-14	-290.9427	44-4	0.4734
44	1.89361	SLE-C-NL	Max	-1.515E-14	-290.9238	44-5	0.
44	2.36702	SLE-C-NL	Max	-2.099E-14	-341.9074	44-5	0.4734
44	2.36702	SLE-C-NL	Max	-1.531E-14	-341.891	44-6	0.
44	2.84042	SLE-C-NL	Max	-2.263E-14	-405.6145	44-6	0.4734
44	0.	SLE-C-NL	Min	-2.602E-14	-234.3733	44-1	0.
44	0.4734	SLE-C-NL	Min	-2.442E-14	-224.4858	44-1	0.4734
44	0.4734	SLE-C-NL	Min	-2.019E-14	-224.4625	44-2	0.

Table: Element Forces - Frames, Part 2 of 2

Frame	Station	OutputCase	StepType	M2	M3	FrameElem	ElemStation
	m			KN-m	KN-m		m
44	0.94681	SLE-C-NL	Min	-2.073E-14	-231.2481	44-2	0.4734
44	0.94681	SLE-C-NL	Min	-1.710E-14	-231.2258	44-3	0.
44	1.42021	SLE-C-NL	Min	-1.957E-14	-253.7258	44-3	0.4734
44	1.42021	SLE-C-NL	Min	-1.562E-14	-253.7049	44-4	0.
44	1.89361	SLE-C-NL	Min	-1.985E-14	-290.9427	44-4	0.4734
44	1.89361	SLE-C-NL	Min	-1.515E-14	-290.9238	44-5	0.
44	2.36702	SLE-C-NL	Min	-2.099E-14	-341.9074	44-5	0.4734
44	2.36702	SLE-C-NL	Min	-1.531E-14	-341.891	44-6	0.
44	2.84042	SLE-C-NL	Min	-2.263E-14	-405.6145	44-6	0.4734
44	0.	SLE-F-1-NL	Max	-2.894E-14	-260.8988	44-1	0.
44	0.4734	SLE-F-1-NL	Max	-2.741E-14	-251.9293	44-1	0.4734
44	0.4734	SLE-F-1-NL	Max	-2.267E-14	-251.9043	44-2	0.
44	0.94681	SLE-F-1-NL	Max	-2.307E-14	-257.7657	44-2	0.4734
44	0.94681	SLE-F-1-NL	Max	-1.917E-14	-257.7417	44-3	0.
44	1.42021	SLE-F-1-NL	Max	-2.128E-14	-277.4729	44-3	0.4734
44	1.42021	SLE-F-1-NL	Max	-1.729E-14	-277.4505	44-4	0.
44	1.89361	SLE-F-1-NL	Max	-2.096E-14	-310.0701	44-4	0.4734
44	1.89361	SLE-F-1-NL	Max	-1.643E-14	-310.0498	44-5	0.
44	2.36702	SLE-F-1-NL	Max	-2.150E-14	-354.5592	44-5	0.4734
44	2.36702	SLE-F-1-NL	Max	-1.622E-14	-354.5415	44-6	0.
44	2.84042	SLE-F-1-NL	Max	-2.256E-14	-409.9271	44-6	0.4734
44	0.	SLE-F-1-NL	Min	-2.894E-14	-260.8988	44-1	0.
44	0.4734	SLE-F-1-NL	Min	-2.741E-14	-251.9293	44-1	0.4734
44	0.4734	SLE-F-1-NL	Min	-2.267E-14	-251.9043	44-2	0.
44	0.94681	SLE-F-1-NL	Min	-2.307E-14	-257.7657	44-2	0.4734
44	0.94681	SLE-F-1-NL	Min	-1.917E-14	-257.7417	44-3	0.
44	1.42021	SLE-F-1-NL	Min	-2.128E-14	-277.4729	44-3	0.4734
44	1.42021	SLE-F-1-NL	Min	-1.729E-14	-277.4505	44-4	0.
44	1.89361	SLE-F-1-NL	Min	-2.096E-14	-310.0701	44-4	0.4734
44	1.89361	SLE-F-1-NL	Min	-1.643E-14	-310.0498	44-5	0.
44	2.36702	SLE-F-1-NL	Min	-2.150E-14	-354.5592	44-5	0.4734
44	2.36702	SLE-F-1-NL	Min	-1.622E-14	-354.5415	44-6	0.
44	2.84042	SLE-F-1-NL	Min	-2.256E-14	-409.9271	44-6	0.4734
44	0.	SLE-F-2-NL	Max	-1.841E-14	-165.4135	44-1	0.
44	0.4734	SLE-F-2-NL	Max	-1.663E-14	-153.073	44-1	0.4734
44	0.4734	SLE-F-2-NL	Max	-1.380E-14	-153.073	44-2	0.
44	0.94681	SLE-F-2-NL	Max	-1.401E-14	-156.3385	44-2	0.4734
44	0.94681	SLE-F-2-NL	Max	-1.152E-14	-156.3385	44-3	0.
44	1.42021	SLE-F-2-NL	Max	-1.351E-14	-174.2775	44-3	0.4734
44	1.42021	SLE-F-2-NL	Max	-1.059E-14	-174.2775	44-4	0.
44	1.89361	SLE-F-2-NL	Max	-1.421E-14	-205.9566	44-4	0.4734
44	1.89361	SLE-F-2-NL	Max	-1.049E-14	-205.9566	44-5	0.
44	2.36702	SLE-F-2-NL	Max	-1.561E-14	-250.4425	44-5	0.4734
44	2.36702	SLE-F-2-NL	Max	-1.091E-14	-250.4425	44-6	0.
44	2.84042	SLE-F-2-NL	Max	-1.741E-14	-306.8015	44-6	0.4734
44	0.	SLE-F-2-NL	Min	-1.841E-14	-165.4135	44-1	0.
44	0.4734	SLE-F-2-NL	Min	-1.663E-14	-153.073	44-1	0.4734
44	0.4734	SLE-F-2-NL	Min	-1.380E-14	-153.073	44-2	0.
44	0.94681	SLE-F-2-NL	Min	-1.401E-14	-156.3385	44-2	0.4734
44	0.94681	SLE-F-2-NL	Min	-1.152E-14	-156.3385	44-3	0.
44	1.42021	SLE-F-2-NL	Min	-1.351E-14	-174.2775	44-3	0.4734
44	1.42021	SLE-F-2-NL	Min	-1.059E-14	-174.2775	44-4	0.
44	1.89361	SLE-F-2-NL	Min	-1.421E-14	-205.9566	44-4	0.4734
44	1.89361	SLE-F-2-NL	Min	-1.049E-14	-205.9566	44-5	0.

Table: Element Forces - Frames, Part 2 of 2

Frame	Station	OutputCase	StepType	M2	M3	FrameElem	ElemStation
	m			KN-m	KN-m		m
44	2.36702	SLE-F-2-NL	Min	-1.561E-14	-250.4425	44-5	0.4734
44	2.36702	SLE-F-2-NL	Min	-1.091E-14	-250.4425	44-6	0.
44	2.84042	SLE-F-2-NL	Min	-1.741E-14	-306.8015	44-6	0.4734
44	0.	SLE-F-3-NL	Max	-1.778E-14	-159.8571	44-1	0.
44	0.4734	SLE-F-3-NL	Max	-1.621E-14	-149.1769	44-1	0.4734
44	0.4734	SLE-F-3-NL	Max	-1.340E-14	-149.1129	44-2	0.
44	0.94681	SLE-F-3-NL	Max	-1.388E-14	-154.6061	44-2	0.4734
44	0.94681	SLE-F-3-NL	Max	-1.131E-14	-154.5399	44-3	0.
44	1.42021	SLE-F-3-NL	Max	-1.365E-14	-175.3465	44-3	0.4734
44	1.42021	SLE-F-3-NL	Max	-1.055E-14	-175.2783	44-4	0.
44	1.89361	SLE-F-3-NL	Max	-1.459E-14	-210.5269	44-4	0.4734
44	1.89361	SLE-F-3-NL	Max	-1.060E-14	-210.4572	44-5	0.
44	2.36702	SLE-F-3-NL	Max	-1.623E-14	-259.2662	44-5	0.4734
44	2.36702	SLE-F-3-NL	Max	-1.117E-14	-259.1952	44-6	0.
44	2.84042	SLE-F-3-NL	Max	-1.827E-14	-320.6734	44-6	0.4734
44	0.	SLE-F-3-NL	Min	-1.778E-14	-159.8571	44-1	0.
44	0.4734	SLE-F-3-NL	Min	-1.621E-14	-149.1769	44-1	0.4734
44	0.4734	SLE-F-3-NL	Min	-1.340E-14	-149.1129	44-2	0.
44	0.94681	SLE-F-3-NL	Min	-1.388E-14	-154.6061	44-2	0.4734
44	0.94681	SLE-F-3-NL	Min	-1.131E-14	-154.5399	44-3	0.
44	1.42021	SLE-F-3-NL	Min	-1.365E-14	-175.3465	44-3	0.4734
44	1.42021	SLE-F-3-NL	Min	-1.055E-14	-175.2783	44-4	0.
44	1.89361	SLE-F-3-NL	Min	-1.459E-14	-210.5269	44-4	0.4734
44	1.89361	SLE-F-3-NL	Min	-1.060E-14	-210.4572	44-5	0.
44	2.36702	SLE-F-3-NL	Min	-1.623E-14	-259.2662	44-5	0.4734
44	2.36702	SLE-F-3-NL	Min	-1.117E-14	-259.1952	44-6	0.
44	2.84042	SLE-F-3-NL	Min	-1.827E-14	-320.6734	44-6	0.4734
44	0.	SLE-QP-NL	Max	-2.135E-14	-192.1599	44-1	0.
44	0.4734	SLE-QP-NL	Max	-1.976E-14	-181.757	44-1	0.4734
44	0.4734	SLE-QP-NL	Max	-1.637E-14	-181.7399	44-2	0.
44	0.94681	SLE-QP-NL	Max	-1.666E-14	-185.9776	44-2	0.4734
44	0.94681	SLE-QP-NL	Max	-1.376E-14	-185.9613	44-3	0.
44	1.42021	SLE-QP-NL	Max	-1.572E-14	-203.884	44-3	0.4734
44	1.42021	SLE-QP-NL	Max	-1.254E-14	-203.8687	44-4	0.
44	1.89361	SLE-QP-NL	Max	-1.602E-14	-234.5067	44-4	0.4734
44	1.89361	SLE-QP-NL	Max	-1.217E-14	-234.4929	44-5	0.
44	2.36702	SLE-QP-NL	Max	-1.703E-14	-276.8643	44-5	0.4734
44	2.36702	SLE-QP-NL	Max	-1.235E-14	-276.8523	44-6	0.
44	2.84042	SLE-QP-NL	Max	-1.846E-14	-329.9639	44-6	0.4734
44	0.	SLE-QP-NL	Min	-2.135E-14	-192.1599	44-1	0.
44	0.4734	SLE-QP-NL	Min	-1.976E-14	-181.757	44-1	0.4734
44	0.4734	SLE-QP-NL	Min	-1.637E-14	-181.7399	44-2	0.
44	0.94681	SLE-QP-NL	Min	-1.666E-14	-185.9776	44-2	0.4734
44	0.94681	SLE-QP-NL	Min	-1.376E-14	-185.9613	44-3	0.
44	1.42021	SLE-QP-NL	Min	-1.572E-14	-203.884	44-3	0.4734
44	1.42021	SLE-QP-NL	Min	-1.254E-14	-203.8687	44-4	0.
44	1.89361	SLE-QP-NL	Min	-1.602E-14	-234.5067	44-4	0.4734
44	1.89361	SLE-QP-NL	Min	-1.217E-14	-234.4929	44-5	0.
44	2.36702	SLE-QP-NL	Min	-1.703E-14	-276.8643	44-5	0.4734
44	2.36702	SLE-QP-NL	Min	-1.235E-14	-276.8523	44-6	0.
44	2.84042	SLE-QP-NL	Min	-1.846E-14	-329.9639	44-6	0.4734
44	0.	SLV1-NL	Max	-9.144E-15	-81.3118	44-1	0.
44	0.4734	SLV1-NL	Max	-6.895E-15	-63.8355	44-1	0.4734
44	0.4734	SLV1-NL	Max	-5.782E-15	-63.8355	44-2	0.

Table: Element Forces - Frames, Part 2 of 2

Frame	Station	OutputCase	StepType	M2	M3	FrameElem	ElemStation
	m			KN-m	KN-m		m
44	0.94681	SLV1-NL	Max	-5.923E-15	-65.6468	44-2	0.4734
44	0.94681	SLV1-NL	Max	-4.600E-15	-65.6468	44-3	0.
44	1.42021	SLV1-NL	Max	-6.942E-15	-85.8646	44-3	0.4734
44	1.42021	SLV1-NL	Max	-4.670E-15	-85.8646	44-4	0.
44	1.89361	SLV1-NL	Max	-9.068E-15	-123.6078	44-4	0.4734
44	1.89361	SLV1-NL	Max	-5.496E-15	-123.6078	44-5	0.
44	2.36702	SLV1-NL	Max	-1.182E-14	-177.9949	44-5	0.4734
44	2.36702	SLV1-NL	Max	-6.793E-15	-177.9949	44-6	0.
44	2.84042	SLV1-NL	Max	-1.493E-14	-248.1445	44-6	0.4734
44	0.	SLV1-NL	Min	-9.144E-15	-81.3118	44-1	0.
44	0.4734	SLV1-NL	Min	-6.895E-15	-63.8355	44-1	0.4734
44	0.4734	SLV1-NL	Min	-5.782E-15	-63.8355	44-2	0.
44	0.94681	SLV1-NL	Min	-5.923E-15	-65.6468	44-2	0.4734
44	0.94681	SLV1-NL	Min	-4.600E-15	-65.6468	44-3	0.
44	1.42021	SLV1-NL	Min	-6.942E-15	-85.8646	44-3	0.4734
44	1.42021	SLV1-NL	Min	-4.670E-15	-85.8646	44-4	0.
44	1.89361	SLV1-NL	Min	-9.068E-15	-123.6078	44-4	0.4734
44	1.89361	SLV1-NL	Min	-5.496E-15	-123.6078	44-5	0.
44	2.36702	SLV1-NL	Min	-1.182E-14	-177.9949	44-5	0.4734
44	2.36702	SLV1-NL	Min	-6.793E-15	-177.9949	44-6	0.
44	2.84042	SLV1-NL	Min	-1.493E-14	-248.1445	44-6	0.4734
44	0.	SLV2-NL	Max	-1.656E-14	-149.0211	44-1	0.
44	0.4734	SLV2-NL	Max	-1.530E-14	-140.7671	44-1	0.4734
44	0.4734	SLV2-NL	Max	-1.254E-14	-140.4912	44-2	0.
44	0.94681	SLV2-NL	Max	-1.357E-14	-150.5351	44-2	0.4734
44	0.94681	SLV2-NL	Max	-1.082E-14	-150.2535	44-3	0.
44	1.42021	SLV2-NL	Max	-1.395E-14	-177.7877	44-3	0.4734
44	1.42021	SLV2-NL	Max	-1.043E-14	-177.5009	44-4	0.
44	1.89361	SLV2-NL	Max	-1.553E-14	-221.7068	44-4	0.4734
44	1.89361	SLV2-NL	Max	-1.086E-14	-221.4149	44-5	0.
44	2.36702	SLV2-NL	Max	-1.780E-14	-281.4639	44-5	0.4734
44	2.36702	SLV2-NL	Max	-1.181E-14	-281.1674	44-6	0.
44	2.84042	SLV2-NL	Max	-2.048E-14	-356.2205	44-6	0.4734
44	0.	SLV2-NL	Min	-1.656E-14	-149.0211	44-1	0.
44	0.4734	SLV2-NL	Min	-1.530E-14	-140.7671	44-1	0.4734
44	0.4734	SLV2-NL	Min	-1.254E-14	-140.4912	44-2	0.
44	0.94681	SLV2-NL	Min	-1.357E-14	-150.5351	44-2	0.4734
44	0.94681	SLV2-NL	Min	-1.082E-14	-150.2535	44-3	0.
44	1.42021	SLV2-NL	Min	-1.395E-14	-177.7877	44-3	0.4734
44	1.42021	SLV2-NL	Min	-1.043E-14	-177.5009	44-4	0.
44	1.89361	SLV2-NL	Min	-1.553E-14	-221.7068	44-4	0.4734
44	1.89361	SLV2-NL	Min	-1.086E-14	-221.4149	44-5	0.
44	2.36702	SLV2-NL	Min	-1.780E-14	-281.4639	44-5	0.4734
44	2.36702	SLV2-NL	Min	-1.181E-14	-281.1674	44-6	0.
44	2.84042	SLV2-NL	Min	-2.048E-14	-356.2205	44-6	0.4734
44	0.	SLV3-NL	Max	-9.370E-15	-83.3968	44-1	0.
44	0.4734	SLV3-NL	Max	-7.189E-15	-66.5102	44-1	0.4734
44	0.4734	SLV3-NL	Max	-6.014E-15	-66.5102	44-2	0.
44	0.94681	SLV3-NL	Max	-6.222E-15	-68.911	44-2	0.4734
44	0.94681	SLV3-NL	Max	-4.834E-15	-68.911	44-3	0.
44	1.42021	SLV3-NL	Max	-7.244E-15	-89.7183	44-3	0.4734
44	1.42021	SLV3-NL	Max	-4.906E-15	-89.7183	44-4	0.
44	1.89361	SLV3-NL	Max	-9.371E-15	-128.0508	44-4	0.4734
44	1.89361	SLV3-NL	Max	-5.732E-15	-128.0508	44-5	0.

Table: Element Forces - Frames, Part 2 of 2

Frame	Station	OutputCase	StepType	M2	M3	FrameElem	ElemStation
	m			KN-m	KN-m		m
44	2.36702	SLV3-NL	Max	-1.213E-14	-183.0271	44-5	0.4734
44	2.36702	SLV3-NL	Max	-7.029E-15	-183.0271	44-6	0.
44	2.84042	SLV3-NL	Max	-1.524E-14	-253.7656	44-6	0.4734
44	0.	SLV3-NL	Min	-9.370E-15	-83.3968	44-1	0.
44	0.4734	SLV3-NL	Min	-7.189E-15	-66.5102	44-1	0.4734
44	0.4734	SLV3-NL	Min	-6.014E-15	-66.5102	44-2	0.
44	0.94681	SLV3-NL	Min	-6.222E-15	-68.911	44-2	0.4734
44	0.94681	SLV3-NL	Min	-4.834E-15	-68.911	44-3	0.
44	1.42021	SLV3-NL	Min	-7.244E-15	-89.7183	44-3	0.4734
44	1.42021	SLV3-NL	Min	-4.906E-15	-89.7183	44-4	0.
44	1.89361	SLV3-NL	Min	-9.371E-15	-128.0508	44-4	0.4734
44	1.89361	SLV3-NL	Min	-5.732E-15	-128.0508	44-5	0.
44	2.36702	SLV3-NL	Min	-1.213E-14	-183.0271	44-5	0.4734
44	2.36702	SLV3-NL	Min	-7.029E-15	-183.0271	44-6	0.
44	2.84042	SLV3-NL	Min	-1.524E-14	-253.7656	44-6	0.4734
44	0.	SLV4-NL	Max	-1.678E-14	-151.0942	44-1	0.
44	0.4734	SLV4-NL	Max	-1.559E-14	-143.4231	44-1	0.4734
44	0.4734	SLV4-NL	Max	-1.277E-14	-143.1485	44-2	0.
44	0.94681	SLV4-NL	Max	-1.387E-14	-153.7772	44-2	0.4734
44	0.94681	SLV4-NL	Max	-1.105E-14	-153.4969	44-3	0.
44	1.42021	SLV4-NL	Max	-1.425E-14	-181.6179	44-3	0.4734
44	1.42021	SLV4-NL	Max	-1.067E-14	-181.3323	44-4	0.
44	1.89361	SLV4-NL	Max	-1.583E-14	-226.1266	44-4	0.4734
44	1.89361	SLV4-NL	Max	-1.110E-14	-225.8361	44-5	0.
44	2.36702	SLV4-NL	Max	-1.810E-14	-286.4746	44-5	0.4734
44	2.36702	SLV4-NL	Max	-1.204E-14	-286.1795	44-6	0.
44	2.84042	SLV4-NL	Max	-2.078E-14	-361.8227	44-6	0.4734
44	0.	SLV4-NL	Min	-1.678E-14	-151.0942	44-1	0.
44	0.4734	SLV4-NL	Min	-1.559E-14	-143.4231	44-1	0.4734
44	0.4734	SLV4-NL	Min	-1.277E-14	-143.1485	44-2	0.
44	0.94681	SLV4-NL	Min	-1.387E-14	-153.7772	44-2	0.4734
44	0.94681	SLV4-NL	Min	-1.105E-14	-153.4969	44-3	0.
44	1.42021	SLV4-NL	Min	-1.425E-14	-181.6179	44-3	0.4734
44	1.42021	SLV4-NL	Min	-1.067E-14	-181.3323	44-4	0.
44	1.89361	SLV4-NL	Min	-1.583E-14	-226.1266	44-4	0.4734
44	1.89361	SLV4-NL	Min	-1.110E-14	-225.8361	44-5	0.
44	2.36702	SLV4-NL	Min	-1.810E-14	-286.4746	44-5	0.4734
44	2.36702	SLV4-NL	Min	-1.204E-14	-286.1795	44-6	0.
44	2.84042	SLV4-NL	Min	-2.078E-14	-361.8227	44-6	0.4734
44	0.	SLV5-NL	Max	-1.888E-14	-169.6605	44-1	0.
44	0.4734	SLV5-NL	Max	-1.700E-14	-156.547	44-1	0.4734
44	0.4734	SLV5-NL	Max	-1.412E-14	-156.547	44-2	0.
44	0.94681	SLV5-NL	Max	-1.427E-14	-159.3405	44-2	0.4734
44	0.94681	SLV5-NL	Max	-1.175E-14	-159.3405	44-3	0.
44	1.42021	SLV5-NL	Max	-1.372E-14	-177.1242	44-3	0.4734
44	1.42021	SLV5-NL	Max	-1.077E-14	-177.1242	44-4	0.
44	1.89361	SLV5-NL	Max	-1.441E-14	-208.9806	44-4	0.4734
44	1.89361	SLV5-NL	Max	-1.064E-14	-208.9806	44-5	0.
44	2.36702	SLV5-NL	Max	-1.583E-14	-253.9921	44-5	0.4734
44	2.36702	SLV5-NL	Max	-1.106E-14	-253.9921	44-6	0.
44	2.84042	SLV5-NL	Max	-1.766E-14	-311.2406	44-6	0.4734
44	0.	SLV5-NL	Min	-1.888E-14	-169.6605	44-1	0.
44	0.4734	SLV5-NL	Min	-1.700E-14	-156.547	44-1	0.4734
44	0.4734	SLV5-NL	Min	-1.412E-14	-156.547	44-2	0.

Table: Element Forces - Frames, Part 2 of 2

Frame	Station	OutputCase	StepType	M2	M3	FrameElem	ElemStation
	m			KN-m	KN-m		m
44	0.94681	SLV5-NL	Min	-1.427E-14	-159.3405	44-2	0.4734
44	0.94681	SLV5-NL	Min	-1.175E-14	-159.3405	44-3	0.
44	1.42021	SLV5-NL	Min	-1.372E-14	-177.1242	44-3	0.4734
44	1.42021	SLV5-NL	Min	-1.077E-14	-177.1242	44-4	0.
44	1.89361	SLV5-NL	Min	-1.441E-14	-208.9806	44-4	0.4734
44	1.89361	SLV5-NL	Min	-1.064E-14	-208.9806	44-5	0.
44	2.36702	SLV5-NL	Min	-1.583E-14	-253.9921	44-5	0.4734
44	2.36702	SLV5-NL	Min	-1.106E-14	-253.9921	44-6	0.
44	2.84042	SLV5-NL	Min	-1.766E-14	-311.2406	44-6	0.4734
44	0.	SLV6-NL	Max	-2.102E-14	-189.2197	44-1	0.
44	0.4734	SLV6-NL	Max	-1.942E-14	-178.6971	44-1	0.4734
44	0.4734	SLV6-NL	Max	-1.607E-14	-178.6124	44-2	0.
44	0.94681	SLV6-NL	Max	-1.647E-14	-183.8005	44-2	0.4734
44	0.94681	SLV6-NL	Max	-1.354E-14	-183.7146	44-3	0.
44	1.42021	SLV6-NL	Max	-1.575E-14	-203.6996	44-3	0.4734
44	1.42021	SLV6-NL	Max	-1.243E-14	-203.613	44-4	0.
44	1.89361	SLV6-NL	Max	-1.629E-14	-237.4671	44-4	0.4734
44	1.89361	SLV6-NL	Max	-1.220E-14	-237.3803	44-5	0.
44	2.36702	SLV6-NL	Max	-1.757E-14	-284.1638	44-5	0.4734
44	2.36702	SLV6-NL	Max	-1.252E-14	-284.0771	44-6	0.
44	2.84042	SLV6-NL	Max	-1.929E-14	-342.839	44-6	0.4734
44	0.	SLV6-NL	Min	-2.102E-14	-189.2197	44-1	0.
44	0.4734	SLV6-NL	Min	-1.942E-14	-178.6971	44-1	0.4734
44	0.4734	SLV6-NL	Min	-1.607E-14	-178.6124	44-2	0.
44	0.94681	SLV6-NL	Min	-1.647E-14	-183.8005	44-2	0.4734
44	0.94681	SLV6-NL	Min	-1.354E-14	-183.7146	44-3	0.
44	1.42021	SLV6-NL	Min	-1.575E-14	-203.6996	44-3	0.4734
44	1.42021	SLV6-NL	Min	-1.243E-14	-203.613	44-4	0.
44	1.89361	SLV6-NL	Min	-1.629E-14	-237.4671	44-4	0.4734
44	1.89361	SLV6-NL	Min	-1.220E-14	-237.3803	44-5	0.
44	2.36702	SLV6-NL	Min	-1.757E-14	-284.1638	44-5	0.4734
44	2.36702	SLV6-NL	Min	-1.252E-14	-284.0771	44-6	0.
44	2.84042	SLV6-NL	Min	-1.929E-14	-342.839	44-6	0.4734
44	0.	SLV7-NL	Max	-1.964E-14	-176.6072	44-1	0.
44	0.4734	SLV7-NL	Max	-1.798E-14	-165.461	44-1	0.4734
44	0.4734	SLV7-NL	Max	-1.489E-14	-165.461	44-2	0.
44	0.94681	SLV7-NL	Max	-1.527E-14	-170.2214	44-2	0.4734
44	0.94681	SLV7-NL	Max	-1.253E-14	-170.2214	44-3	0.
44	1.42021	SLV7-NL	Max	-1.473E-14	-189.9716	44-3	0.4734
44	1.42021	SLV7-NL	Max	-1.156E-14	-189.9716	44-4	0.
44	1.89361	SLV7-NL	Max	-1.542E-14	-223.7942	44-4	0.4734
44	1.89361	SLV7-NL	Max	-1.143E-14	-223.7942	44-5	0.
44	2.36702	SLV7-NL	Max	-1.684E-14	-270.7713	44-5	0.4734
44	2.36702	SLV7-NL	Max	-1.185E-14	-270.7713	44-6	0.
44	2.84042	SLV7-NL	Max	-1.867E-14	-329.9853	44-6	0.4734
44	0.	SLV7-NL	Min	-1.964E-14	-176.6072	44-1	0.
44	0.4734	SLV7-NL	Min	-1.798E-14	-165.461	44-1	0.4734
44	0.4734	SLV7-NL	Min	-1.489E-14	-165.461	44-2	0.
44	0.94681	SLV7-NL	Min	-1.527E-14	-170.2214	44-2	0.4734
44	0.94681	SLV7-NL	Min	-1.253E-14	-170.2214	44-3	0.
44	1.42021	SLV7-NL	Min	-1.473E-14	-189.9716	44-3	0.4734
44	1.42021	SLV7-NL	Min	-1.156E-14	-189.9716	44-4	0.
44	1.89361	SLV7-NL	Min	-1.542E-14	-223.7942	44-4	0.4734
44	1.89361	SLV7-NL	Min	-1.143E-14	-223.7942	44-5	0.

Table: Element Forces - Frames, Part 2 of 2

Frame	Station	OutputCase	StepType	M2	M3	FrameElem	ElemStation
	m			KN-m	KN-m		m
44	2.36702	SLV7-NL	Min	-1.684E-14	-270.7713	44-5	0.4734
44	2.36702	SLV7-NL	Min	-1.185E-14	-270.7713	44-6	0.
44	2.84042	SLV7-NL	Min	-1.867E-14	-329.9853	44-6	0.4734
44	0.	SLV8-NL	Max	-2.177E-14	-196.1296	44-1	0.
44	0.4734	SLV8-NL	Max	-2.040E-14	-187.5519	44-1	0.4734
44	0.4734	SLV8-NL	Max	-1.683E-14	-187.4683	44-2	0.
44	0.94681	SLV8-NL	Max	-1.746E-14	-194.6071	44-2	0.4734
44	0.94681	SLV8-NL	Max	-1.431E-14	-194.5224	44-3	0.
44	1.42021	SLV8-NL	Max	-1.675E-14	-216.4641	44-3	0.4734
44	1.42021	SLV8-NL	Max	-1.321E-14	-216.3788	44-4	0.
44	1.89361	SLV8-NL	Max	-1.730E-14	-252.1949	44-4	0.4734
44	1.89361	SLV8-NL	Max	-1.298E-14	-252.1094	44-5	0.
44	2.36702	SLV8-NL	Max	-1.858E-14	-300.8586	44-5	0.4734
44	2.36702	SLV8-NL	Max	-1.330E-14	-300.7731	44-6	0.
44	2.84042	SLV8-NL	Max	-2.029E-14	-361.502	44-6	0.4734
44	0.	SLV8-NL	Min	-2.177E-14	-196.1296	44-1	0.
44	0.4734	SLV8-NL	Min	-2.040E-14	-187.5519	44-1	0.4734
44	0.4734	SLV8-NL	Min	-1.683E-14	-187.4683	44-2	0.
44	0.94681	SLV8-NL	Min	-1.746E-14	-194.6071	44-2	0.4734
44	0.94681	SLV8-NL	Min	-1.431E-14	-194.5224	44-3	0.
44	1.42021	SLV8-NL	Min	-1.675E-14	-216.4641	44-3	0.4734
44	1.42021	SLV8-NL	Min	-1.321E-14	-216.3788	44-4	0.
44	1.89361	SLV8-NL	Min	-1.730E-14	-252.1949	44-4	0.4734
44	1.89361	SLV8-NL	Min	-1.298E-14	-252.1094	44-5	0.
44	2.36702	SLV8-NL	Min	-1.858E-14	-300.8586	44-5	0.4734
44	2.36702	SLV8-NL	Min	-1.330E-14	-300.7731	44-6	0.
44	2.84042	SLV8-NL	Min	-2.029E-14	-361.502	44-6	0.4734
44	0.	SLV9-NL	Max	-1.333E-14	-119.447	44-1	0.
44	0.4734	SLV9-NL	Max	-1.146E-14	-105.6024	44-1	0.4734
44	0.4734	SLV9-NL	Max	-9.507E-15	-105.6024	44-2	0.
44	0.94681	SLV9-NL	Max	-9.894E-15	-109.8902	44-2	0.4734
44	0.94681	SLV9-NL	Max	-7.925E-15	-109.8902	44-3	0.
44	1.42021	SLV9-NL	Max	-1.037E-14	-131.3247	44-3	0.4734
44	1.42021	SLV9-NL	Max	-7.635E-15	-131.3247	44-4	0.
44	1.89361	SLV9-NL	Max	-1.199E-14	-168.9203	44-4	0.4734
44	1.89361	SLV9-NL	Max	-8.128E-15	-168.9203	44-5	0.
44	2.36702	SLV9-NL	Max	-1.424E-14	-221.6906	44-5	0.4734
44	2.36702	SLV9-NL	Max	-9.109E-15	-221.6906	44-6	0.
44	2.84042	SLV9-NL	Max	-1.686E-14	-288.6495	44-6	0.4734
44	0.	SLV9-NL	Min	-1.333E-14	-119.447	44-1	0.
44	0.4734	SLV9-NL	Min	-1.146E-14	-105.6024	44-1	0.4734
44	0.4734	SLV9-NL	Min	-9.507E-15	-105.6024	44-2	0.
44	0.94681	SLV9-NL	Min	-9.894E-15	-109.8902	44-2	0.4734
44	0.94681	SLV9-NL	Min	-7.925E-15	-109.8902	44-3	0.
44	1.42021	SLV9-NL	Min	-1.037E-14	-131.3247	44-3	0.4734
44	1.42021	SLV9-NL	Min	-7.635E-15	-131.3247	44-4	0.
44	1.89361	SLV9-NL	Min	-1.199E-14	-168.9203	44-4	0.4734
44	1.89361	SLV9-NL	Min	-8.128E-15	-168.9203	44-5	0.
44	2.36702	SLV9-NL	Min	-1.424E-14	-221.6906	44-5	0.4734
44	2.36702	SLV9-NL	Min	-9.109E-15	-221.6906	44-6	0.
44	2.84042	SLV9-NL	Min	-1.686E-14	-288.6495	44-6	0.4734
44	0.	SLV10-NL	Max	-2.447E-14	-220.573	44-1	0.
44	0.4734	SLV10-NL	Max	-2.306E-14	-212.0512	44-1	0.4734
44	0.4734	SLV10-NL	Max	-1.906E-14	-211.9501	44-2	0.

Table: Element Forces - Frames, Part 2 of 2

Frame	Station	OutputCase	StepType	M2	M3	FrameElem	ElemStation
	m			KN-m	KN-m		m
44	0.94681	SLV10-NL	Max	-1.947E-14	-217.4648	44-2	0.4734
44	0.94681	SLV10-NL	Max	-1.611E-14	-217.3602	44-3	0.
44	1.42021	SLV10-NL	Max	-1.815E-14	-236.1412	44-3	0.4734
44	1.42021	SLV10-NL	Max	-1.461E-14	-236.0338	44-4	0.
44	1.89361	SLV10-NL	Max	-1.814E-14	-267.2941	44-4	0.4734
44	1.89361	SLV10-NL	Max	-1.401E-14	-267.1843	44-5	0.
44	2.36702	SLV10-NL	Max	-1.892E-14	-310.1226	44-5	0.4734
44	2.36702	SLV10-NL	Max	-1.399E-14	-310.0107	44-6	0.
44	2.84042	SLV10-NL	Max	-2.017E-14	-363.8127	44-6	0.4734
44	0.	SLV10-NL	Min	-2.447E-14	-220.573	44-1	0.
44	0.4734	SLV10-NL	Min	-2.306E-14	-212.0512	44-1	0.4734
44	0.4734	SLV10-NL	Min	-1.906E-14	-211.9501	44-2	0.
44	0.94681	SLV10-NL	Min	-1.947E-14	-217.4648	44-2	0.4734
44	0.94681	SLV10-NL	Min	-1.611E-14	-217.3602	44-3	0.
44	1.42021	SLV10-NL	Min	-1.815E-14	-236.1412	44-3	0.4734
44	1.42021	SLV10-NL	Min	-1.461E-14	-236.0338	44-4	0.
44	1.89361	SLV10-NL	Min	-1.814E-14	-267.2941	44-4	0.4734
44	1.89361	SLV10-NL	Min	-1.401E-14	-267.1843	44-5	0.
44	2.36702	SLV10-NL	Min	-1.892E-14	-310.1226	44-5	0.4734
44	2.36702	SLV10-NL	Min	-1.399E-14	-310.0107	44-6	0.
44	2.84042	SLV10-NL	Min	-2.017E-14	-363.8127	44-6	0.4734
44	0.	SLV11-NL	Max	-1.500E-14	-134.5195	44-1	0.
44	0.4734	SLV11-NL	Max	-1.307E-14	-120.455	44-1	0.4734
44	0.4734	SLV11-NL	Max	-1.085E-14	-120.455	44-2	0.
44	0.94681	SLV11-NL	Max	-1.119E-14	-124.5223	44-2	0.4734
44	0.94681	SLV11-NL	Max	-9.040E-15	-124.5223	44-3	0.
44	1.42021	SLV11-NL	Max	-1.145E-14	-145.7361	44-3	0.4734
44	1.42021	SLV11-NL	Max	-8.582E-15	-145.7361	44-4	0.
44	1.89361	SLV11-NL	Max	-1.290E-14	-183.1107	44-4	0.4734
44	1.89361	SLV11-NL	Max	-8.946E-15	-183.1107	44-5	0.
44	2.36702	SLV11-NL	Max	-1.503E-14	-235.6598	44-5	0.4734
44	2.36702	SLV11-NL	Max	-9.826E-15	-235.6598	44-6	0.
44	2.84042	SLV11-NL	Max	-1.754E-14	-302.3975	44-6	0.4734
44	0.	SLV11-NL	Min	-1.500E-14	-134.5195	44-1	0.
44	0.4734	SLV11-NL	Min	-1.307E-14	-120.455	44-1	0.4734
44	0.4734	SLV11-NL	Min	-1.085E-14	-120.455	44-2	0.
44	0.94681	SLV11-NL	Min	-1.119E-14	-124.5223	44-2	0.4734
44	0.94681	SLV11-NL	Min	-9.040E-15	-124.5223	44-3	0.
44	1.42021	SLV11-NL	Min	-1.145E-14	-145.7361	44-3	0.4734
44	1.42021	SLV11-NL	Min	-8.582E-15	-145.7361	44-4	0.
44	1.89361	SLV11-NL	Min	-1.290E-14	-183.1107	44-4	0.4734
44	1.89361	SLV11-NL	Min	-8.946E-15	-183.1107	44-5	0.
44	2.36702	SLV11-NL	Min	-1.503E-14	-235.6598	44-5	0.4734
44	2.36702	SLV11-NL	Min	-9.826E-15	-235.6598	44-6	0.
44	2.84042	SLV11-NL	Min	-1.754E-14	-302.3975	44-6	0.4734
44	0.	SLV12-NL	Max	-2.613E-14	-235.5722	44-1	0.
44	0.4734	SLV12-NL	Max	-2.467E-14	-226.8132	44-1	0.4734
44	0.4734	SLV12-NL	Max	-2.040E-14	-226.709	44-2	0.
44	0.94681	SLV12-NL	Max	-2.076E-14	-231.9964	44-2	0.4734
44	0.94681	SLV12-NL	Max	-1.722E-14	-231.8888	44-3	0.
44	1.42021	SLV12-NL	Max	-1.922E-14	-250.4507	44-3	0.4734
44	1.42021	SLV12-NL	Max	-1.555E-14	-250.3403	44-4	0.
44	1.89361	SLV12-NL	Max	-1.905E-14	-281.3868	44-4	0.4734
44	1.89361	SLV12-NL	Max	-1.482E-14	-281.274	44-5	0.

Table: Element Forces - Frames, Part 2 of 2

Frame	Station	OutputCase	StepType	M2	M3	FrameElem	ElemStation
	m			KN-m	KN-m		m
44	2.36702	SLV12-NL	Max	-1.970E-14	-323.9999	44-5	0.4734
44	2.36702	SLV12-NL	Max	-1.470E-14	-323.8851	44-6	0.
44	2.84042	SLV12-NL	Max	-2.085E-14	-377.4715	44-6	0.4734
44	0.	SLV12-NL	Min	-2.613E-14	-235.5722	44-1	0.
44	0.4734	SLV12-NL	Min	-2.467E-14	-226.8132	44-1	0.4734
44	0.4734	SLV12-NL	Min	-2.040E-14	-226.709	44-2	0.
44	0.94681	SLV12-NL	Min	-2.076E-14	-231.9964	44-2	0.4734
44	0.94681	SLV12-NL	Min	-1.722E-14	-231.8888	44-3	0.
44	1.42021	SLV12-NL	Min	-1.922E-14	-250.4507	44-3	0.4734
44	1.42021	SLV12-NL	Min	-1.555E-14	-250.3403	44-4	0.
44	1.89361	SLV12-NL	Min	-1.905E-14	-281.3868	44-4	0.4734
44	1.89361	SLV12-NL	Min	-1.482E-14	-281.274	44-5	0.
44	2.36702	SLV12-NL	Min	-1.970E-14	-323.9999	44-5	0.4734
44	2.36702	SLV12-NL	Min	-1.470E-14	-323.8851	44-6	0.
44	2.84042	SLV12-NL	Min	-2.085E-14	-377.4715	44-6	0.4734
44	0.	SLV13-NL	Max	-1.795E-14	-161.3948	44-1	0.
44	0.4734	SLV13-NL	Max	-1.637E-14	-150.6007	44-1	0.4734
44	0.4734	SLV13-NL	Max	-1.355E-14	-150.6007	44-2	0.
44	0.94681	SLV13-NL	Max	-1.394E-14	-155.3676	44-2	0.4734
44	0.94681	SLV13-NL	Max	-1.141E-14	-155.3676	44-3	0.
44	1.42021	SLV13-NL	Max	-1.358E-14	-174.7473	44-3	0.4734
44	1.42021	SLV13-NL	Max	-1.058E-14	-174.7473	44-4	0.
44	1.89361	SLV13-NL	Max	-1.437E-14	-207.7905	44-4	0.4734
44	1.89361	SLV13-NL	Max	-1.055E-14	-207.7905	44-5	0.
44	2.36702	SLV13-NL	Max	-1.582E-14	-253.5482	44-5	0.4734
44	2.36702	SLV13-NL	Max	-1.103E-14	-253.5482	44-6	0.
44	2.84042	SLV13-NL	Max	-1.766E-14	-311.0709	44-6	0.4734
44	0.	SLV13-NL	Min	-1.795E-14	-161.3948	44-1	0.
44	0.4734	SLV13-NL	Min	-1.637E-14	-150.6007	44-1	0.4734
44	0.4734	SLV13-NL	Min	-1.355E-14	-150.6007	44-2	0.
44	0.94681	SLV13-NL	Min	-1.394E-14	-155.3676	44-2	0.4734
44	0.94681	SLV13-NL	Min	-1.141E-14	-155.3676	44-3	0.
44	1.42021	SLV13-NL	Min	-1.358E-14	-174.7473	44-3	0.4734
44	1.42021	SLV13-NL	Min	-1.058E-14	-174.7473	44-4	0.
44	1.89361	SLV13-NL	Min	-1.437E-14	-207.7905	44-4	0.4734
44	1.89361	SLV13-NL	Min	-1.055E-14	-207.7905	44-5	0.
44	2.36702	SLV13-NL	Min	-1.582E-14	-253.5482	44-5	0.4734
44	2.36702	SLV13-NL	Min	-1.103E-14	-253.5482	44-6	0.
44	2.84042	SLV13-NL	Min	-1.766E-14	-311.0709	44-6	0.4734
44	0.	SLV14-NL	Max	-2.114E-14	-190.378	44-1	0.
44	0.4734	SLV14-NL	Max	-1.968E-14	-181.0176	44-1	0.4734
44	0.4734	SLV14-NL	Max	-1.628E-14	-180.9853	44-2	0.
44	0.94681	SLV14-NL	Max	-1.668E-14	-186.073	44-2	0.4734
44	0.94681	SLV14-NL	Max	-1.375E-14	-186.0402	44-3	0.
44	1.42021	SLV14-NL	Max	-1.580E-14	-204.6748	44-3	0.4734
44	1.42021	SLV14-NL	Max	-1.257E-14	-204.6419	44-4	0.
44	1.89361	SLV14-NL	Max	-1.613E-14	-235.9077	44-4	0.4734
44	1.89361	SLV14-NL	Max	-1.223E-14	-235.8751	44-5	0.
44	2.36702	SLV14-NL	Max	-1.716E-14	-278.8445	44-5	0.4734
44	2.36702	SLV14-NL	Max	-1.242E-14	-278.8125	44-6	0.
44	2.84042	SLV14-NL	Max	-1.860E-14	-332.5464	44-6	0.4734
44	0.	SLV14-NL	Min	-2.114E-14	-190.378	44-1	0.
44	0.4734	SLV14-NL	Min	-1.968E-14	-181.0176	44-1	0.4734
44	0.4734	SLV14-NL	Min	-1.628E-14	-180.9853	44-2	0.

Table: Element Forces - Frames, Part 2 of 2

Frame	Station	OutputCase	StepType	M2	M3	FrameElem	ElemStation
	m			KN-m	KN-m		m
44	0.94681	SLV14-NL	Min	-1.668E-14	-186.073	44-2	0.4734
44	0.94681	SLV14-NL	Min	-1.375E-14	-186.0402	44-3	0.
44	1.42021	SLV14-NL	Min	-1.580E-14	-204.6748	44-3	0.4734
44	1.42021	SLV14-NL	Min	-1.257E-14	-204.6419	44-4	0.
44	1.89361	SLV14-NL	Min	-1.613E-14	-235.9077	44-4	0.4734
44	1.89361	SLV14-NL	Min	-1.223E-14	-235.8751	44-5	0.
44	2.36702	SLV14-NL	Min	-1.716E-14	-278.8445	44-5	0.4734
44	2.36702	SLV14-NL	Min	-1.242E-14	-278.8125	44-6	0.
44	2.84042	SLV14-NL	Min	-1.860E-14	-332.5464	44-6	0.4734
44	0.	SLV15-NL	Max	-2.331E-14	-209.8551	44-1	0.
44	0.4734	SLV15-NL	Max	-2.158E-14	-198.4707	44-1	0.4734
44	0.4734	SLV15-NL	Max	-1.788E-14	-198.4676	44-2	0.
44	0.94681	SLV15-NL	Max	-1.815E-14	-202.7376	44-2	0.4734
44	0.94681	SLV15-NL	Max	-1.502E-14	-202.7365	44-3	0.
44	1.42021	SLV15-NL	Max	-1.708E-14	-221.651	44-3	0.4734
44	1.42021	SLV15-NL	Max	-1.366E-14	-221.651	44-4	0.
44	1.89361	SLV15-NL	Max	-1.735E-14	-254.2283	44-4	0.4734
44	1.89361	SLV15-NL	Max	-1.322E-14	-254.2283	44-5	0.
44	2.36702	SLV15-NL	Max	-1.841E-14	-299.5193	44-5	0.4734
44	2.36702	SLV15-NL	Max	-1.338E-14	-299.5193	44-6	0.
44	2.84042	SLV15-NL	Max	-1.994E-14	-356.5748	44-6	0.4734
44	0.	SLV15-NL	Min	-2.331E-14	-209.8551	44-1	0.
44	0.4734	SLV15-NL	Min	-2.158E-14	-198.4707	44-1	0.4734
44	0.4734	SLV15-NL	Min	-1.788E-14	-198.4676	44-2	0.
44	0.94681	SLV15-NL	Min	-1.815E-14	-202.7376	44-2	0.4734
44	0.94681	SLV15-NL	Min	-1.502E-14	-202.7365	44-3	0.
44	1.42021	SLV15-NL	Min	-1.708E-14	-221.651	44-3	0.4734
44	1.42021	SLV15-NL	Min	-1.366E-14	-221.651	44-4	0.
44	1.89361	SLV15-NL	Min	-1.735E-14	-254.2283	44-4	0.4734
44	1.89361	SLV15-NL	Min	-1.322E-14	-254.2283	44-5	0.
44	2.36702	SLV15-NL	Min	-1.841E-14	-299.5193	44-5	0.4734
44	2.36702	SLV15-NL	Min	-1.338E-14	-299.5193	44-6	0.
44	2.84042	SLV15-NL	Min	-1.994E-14	-356.5748	44-6	0.4734
44	0.	SLV16-NL	Max	-2.648E-14	-238.5936	44-1	0.
44	0.4734	SLV16-NL	Max	-2.484E-14	-228.4278	44-1	0.4734
44	0.4734	SLV16-NL	Max	-2.057E-14	-228.3889	44-2	0.
44	0.94681	SLV16-NL	Max	-2.082E-14	-232.7776	44-2	0.4734
44	0.94681	SLV16-NL	Max	-1.730E-14	-232.7384	44-3	0.
44	1.42021	SLV16-NL	Max	-1.924E-14	-250.7725	44-3	0.4734
44	1.42021	SLV16-NL	Max	-1.559E-14	-250.7337	44-4	0.
44	1.89361	SLV16-NL	Max	-1.906E-14	-281.4856	44-4	0.4734
44	1.89361	SLV16-NL	Max	-1.485E-14	-281.4476	44-5	0.
44	2.36702	SLV16-NL	Max	-1.970E-14	-323.9748	44-5	0.4734
44	2.36702	SLV16-NL	Max	-1.473E-14	-323.9381	44-6	0.
44	2.84042	SLV16-NL	Max	-2.084E-14	-377.2842	44-6	0.4734
44	0.	SLV16-NL	Min	-2.648E-14	-238.5936	44-1	0.
44	0.4734	SLV16-NL	Min	-2.484E-14	-228.4278	44-1	0.4734
44	0.4734	SLV16-NL	Min	-2.057E-14	-228.3889	44-2	0.
44	0.94681	SLV16-NL	Min	-2.082E-14	-232.7776	44-2	0.4734
44	0.94681	SLV16-NL	Min	-1.730E-14	-232.7384	44-3	0.
44	1.42021	SLV16-NL	Min	-1.924E-14	-250.7725	44-3	0.4734
44	1.42021	SLV16-NL	Min	-1.559E-14	-250.7337	44-4	0.
44	1.89361	SLV16-NL	Min	-1.906E-14	-281.4856	44-4	0.4734
44	1.89361	SLV16-NL	Min	-1.485E-14	-281.4476	44-5	0.

Table: Element Forces - Frames, Part 2 of 2

Frame	Station	OutputCase	StepType	M2	M3	FrameElem	ElemStation
	m			KN-m	KN-m		m
44	2.36702	SLV16-NL	Min	-1.970E-14	-323.9748	44-5	0.4734
44	2.36702	SLV16-NL	Min	-1.473E-14	-323.9381	44-6	0.
44	2.84042	SLV16-NL	Min	-2.084E-14	-377.2842	44-6	0.4734

Table: Frame Loads - Distributed, Part 1 of 3

Table: Frame Loads - Distributed, Part 1 of 3

Frame	LoadPat	CoordSys	Type	Dir	DistType	RelDistA
7	Ds.h sisma orizz	GLOBAL	Force	X Proj	RelDist	0.
8	Ds.h sisma orizz	GLOBAL	Force	X Proj	RelDist	0.
9	Ds.h sisma orizz	GLOBAL	Force	X Proj	RelDist	0.
10	Ds.h sisma orizz	GLOBAL	Force	X Proj	RelDist	0.
11	Ds.h sisma orizz	GLOBAL	Force	X Proj	RelDist	0.
12	Ds.h sisma orizz	GLOBAL	Force	X Proj	RelDist	0.
21	Q1 variabile	GLOBAL	Force	Grav Proj	RelDist	0.
21	Q1 variabile	GLOBAL	Force	Grav Proj	RelDist	0.2
21	Q1 variabile	GLOBAL	Force	Grav Proj	RelDist	0.4
21	Q1 variabile	GLOBAL	Force	Grav Proj	RelDist	0.6
21	Q1 variabile	GLOBAL	Force	Grav Proj	RelDist	0.8
21	SQ1.sx spinta var	GLOBAL	Force	X Proj	RelDist	0.
21	SQ1.sx spinta var	GLOBAL	Force	X Proj	RelDist	0.2
21	SQ1.sx spinta var	GLOBAL	Force	X Proj	RelDist	0.4
21	SQ1.sx spinta var	GLOBAL	Force	X Proj	RelDist	0.6
21	SQ1.sx spinta var	GLOBAL	Force	X Proj	RelDist	0.8
21	P.cop perm cop	GLOBAL	Force	Grav Proj	RelDist	0.
21	SP.sx spinta terra perm	GLOBAL	Force	X Proj	RelDist	0.
21	Ds.h sisma orizz	GLOBAL	Force	X Proj	RelDist	0.
21	Ds.v sisma vert	GLOBAL	Force	Grav Proj	RelDist	0.
26	Q1 variabile	GLOBAL	Force	Grav Proj	RelDist	0.
26	SQ1.sx spinta var	GLOBAL	Force	X Proj	RelDist	0.
26	P.cop perm cop	GLOBAL	Force	Grav Proj	RelDist	0.
26	SP.sx spinta terra perm	GLOBAL	Force	X Proj	RelDist	0.
26	Ds.h sisma orizz	GLOBAL	Force	X Proj	RelDist	0.
26	Ds.v sisma vert	GLOBAL	Force	Grav Proj	RelDist	0.
27	Q1 variabile	GLOBAL	Force	Grav Proj	RelDist	0.
27	SQ1.sx spinta var	GLOBAL	Force	X Proj	RelDist	0.
27	P.cop perm cop	GLOBAL	Force	Grav Proj	RelDist	0.
27	SP.sx spinta terra perm	GLOBAL	Force	X Proj	RelDist	0.
27	Ds.h sisma orizz	GLOBAL	Force	X Proj	RelDist	0.
27	Ds.v sisma vert	GLOBAL	Force	Grav Proj	RelDist	0.
28	Q1 variabile	GLOBAL	Force	Grav Proj	RelDist	0.
28	SQ1.sx spinta var	GLOBAL	Force	X Proj	RelDist	0.
28	P.cop perm cop	GLOBAL	Force	Grav Proj	RelDist	0.
28	SP.sx spinta terra perm	GLOBAL	Force	X Proj	RelDist	0.
28	Ds.h sisma orizz	GLOBAL	Force	X Proj	RelDist	0.
28	Ds.v sisma vert	GLOBAL	Force	Grav Proj	RelDist	0.
29	Q1 variabile	GLOBAL	Force	Grav Proj	RelDist	0.
29	SQ1.sx spinta var	GLOBAL	Force	X Proj	RelDist	0.
29	P.cop perm cop	GLOBAL	Force	Grav Proj	RelDist	0.

Table: Frame Loads - Distributed, Part 1 of 3

Frame	LoadPat	CoordSys	Type	Dir	DistType	RelDistA
29	SP.sx spinta terra perm	GLOBAL	Force	X Proj	RelDist	0.
29	Ds.h sisma orizz	GLOBAL	Force	X Proj	RelDist	0.
29	Ds.v sisma vert	GLOBAL	Force	Grav Proj	RelDist	0.
30	Q1 variabile	GLOBAL	Force	Grav Proj	RelDist	0.
30	SQ1.sx spinta var	GLOBAL	Force	X Proj	RelDist	0.
30	P.cop perm cop	GLOBAL	Force	Grav Proj	RelDist	0.
30	SP.sx spinta terra perm	GLOBAL	Force	X Proj	RelDist	0.
30	Ds.h sisma orizz	GLOBAL	Force	X Proj	RelDist	0.
30	Ds.v sisma vert	GLOBAL	Force	Grav Proj	RelDist	0.
31	Q1 variabile	GLOBAL	Force	Grav Proj	RelDist	0.
31	SQ1.dx spinta var	GLOBAL	Force	X Proj	RelDist	0.
31	P.cop perm cop	GLOBAL	Force	Grav Proj	RelDist	0.
31	SP.dx spinta terra perm	GLOBAL	Force	X Proj	RelDist	0.
31	Ds.v sisma vert	GLOBAL	Force	Grav Proj	RelDist	0.
32	Q1 variabile	GLOBAL	Force	Grav Proj	RelDist	0.
32	SQ1.dx spinta var	GLOBAL	Force	X Proj	RelDist	0.
32	P.cop perm cop	GLOBAL	Force	Grav Proj	RelDist	0.
32	SP.dx spinta terra perm	GLOBAL	Force	X Proj	RelDist	0.
32	Ds.v sisma vert	GLOBAL	Force	Grav Proj	RelDist	0.
33	Q1 variabile	GLOBAL	Force	Grav Proj	RelDist	0.
33	SQ1.dx spinta var	GLOBAL	Force	X Proj	RelDist	0.
33	P.cop perm cop	GLOBAL	Force	Grav Proj	RelDist	0.
33	SP.dx spinta terra perm	GLOBAL	Force	X Proj	RelDist	0.
33	Ds.v sisma vert	GLOBAL	Force	Grav Proj	RelDist	0.
34	Q1 variabile	GLOBAL	Force	Grav Proj	RelDist	0.
34	SQ1.dx spinta var	GLOBAL	Force	X Proj	RelDist	0.
34	P.cop perm cop	GLOBAL	Force	Grav Proj	RelDist	0.
34	SP.dx spinta terra perm	GLOBAL	Force	X Proj	RelDist	0.
34	Ds.v sisma vert	GLOBAL	Force	Grav Proj	RelDist	0.
35	Q1 variabile	GLOBAL	Force	Grav Proj	RelDist	0.
35	SQ1.dx spinta var	GLOBAL	Force	X Proj	RelDist	0.
35	P.cop perm cop	GLOBAL	Force	Grav Proj	RelDist	0.
35	SP.dx spinta terra perm	GLOBAL	Force	X Proj	RelDist	0.
35	Ds.v sisma vert	GLOBAL	Force	Grav Proj	RelDist	0.
36	Q1 variabile	GLOBAL	Force	Grav Proj	RelDist	0.
36	Q1 variabile	GLOBAL	Force	Grav Proj	RelDist	0.2
36	Q1 variabile	GLOBAL	Force	Grav Proj	RelDist	0.4
36	Q1 variabile	GLOBAL	Force	Grav Proj	RelDist	0.6
36	Q1 variabile	GLOBAL	Force	Grav Proj	RelDist	0.8
36	SQ1.dx spinta var	GLOBAL	Force	X Proj	RelDist	0.
36	SQ1.dx spinta var	GLOBAL	Force	X Proj	RelDist	0.2
36	SQ1.dx spinta var	GLOBAL	Force	X Proj	RelDist	0.4
36	SQ1.dx spinta var	GLOBAL	Force	X Proj	RelDist	0.6
36	SQ1.dx spinta var	GLOBAL	Force	X Proj	RelDist	0.8
36	P.cop perm cop	GLOBAL	Force	Grav Proj	RelDist	0.
36	SP.dx spinta terra perm	GLOBAL	Force	X Proj	RelDist	0.
36	Ds.v sisma vert	GLOBAL	Force	Grav Proj	RelDist	0.
41	SQ1.dx spinta var	GLOBAL	Force	X	RelDist	0.

Table: Frame Loads - Distributed, Part 1 of 3

Frame	LoadPat	CoordSys	Type	Dir	DistType	RelDistA
41	SP.dx spinta terra perm	GLOBAL	Force	X	RelDist	0.
42	SQ1.dx spinta var	GLOBAL	Force	X	RelDist	0.
42	SP.dx spinta terra perm	GLOBAL	Force	X	RelDist	0.
43	SQ1.sx spinta var	GLOBAL	Force	X	RelDist	0.
43	SP.sx spinta terra perm	GLOBAL	Force	X	RelDist	0.
43	Ds.h sisma orizz	GLOBAL	Force	X	RelDist	0.
44	SQ1.sx spinta var	GLOBAL	Force	X	RelDist	0.
44	SP.sx spinta terra perm	GLOBAL	Force	X	RelDist	0.
44	Ds.h sisma orizz	GLOBAL	Force	X	RelDist	0.

Table: Frame Loads - Distributed, Part 2 of 3

Table: Frame Loads - Distributed, Part 2 of 3

Frame	LoadPat	RelDistB	AbsDistA	AbsDistB	FOverLA	FOverLB
			m	m	KN/m	KN/m
7	Ds.h sisma orizz	1.	0.	0.5127	18.95	18.95
8	Ds.h sisma orizz	1.	0.	0.5127	18.95	18.95
9	Ds.h sisma orizz	1.	0.	0.5127	18.95	18.95
10	Ds.h sisma orizz	1.	0.	0.5127	18.95	18.95
11	Ds.h sisma orizz	1.	0.	0.5127	18.95	18.95
12	Ds.h sisma orizz	1.	0.	0.5127	18.95	18.95
21	Q1 variabile	0.2	0.	0.41857	20.	20.
21	Q1 variabile	0.4	0.41857	0.83713	20.	20.
21	Q1 variabile	0.6	0.83713	1.2557	20.	20.
21	Q1 variabile	0.8	1.2557	1.67427	20.	20.
21	Q1 variabile	1.	1.67427	2.09284	20.	20.
21	SQ1.sx spinta var	0.2	0.	0.41857	8.52	8.52
21	SQ1.sx spinta var	0.4	0.41857	0.83713	8.52	8.52
21	SQ1.sx spinta var	0.6	0.83713	1.2557	8.52	8.52
21	SQ1.sx spinta var	0.8	1.2557	1.67427	8.52	8.52
21	SQ1.sx spinta var	1.	1.67427	2.09284	8.52	8.52
21	P.cop perm cop	1.	0.	2.09284	94.	72.
21	SP.sx spinta terra perm	1.	0.	2.09284	40.04	30.67
21	Ds.h sisma orizz	1.	0.	2.09284	18.95	18.95
21	Ds.v sisma vert	1.	0.	2.09284	3.16	3.16
26	Q1 variabile	1.	0.	0.46056	20.	20.
26	SQ1.sx spinta var	1.	0.	0.46056	8.52	8.52
26	P.cop perm cop	1.	0.	0.46056	72.	68.
26	SP.sx spinta terra perm	1.	0.	0.46056	30.67	28.97
26	Ds.h sisma orizz	1.	0.	0.46056	18.95	18.95
26	Ds.v sisma vert	1.	0.	0.46056	3.16	3.16
27	Q1 variabile	1.	0.	0.46056	20.	20.
27	SQ1.sx spinta var	1.	0.	0.46056	8.52	8.52
27	P.cop perm cop	1.	0.	0.46056	68.	64.
27	SP.sx spinta terra perm	1.	0.	0.46056	28.97	27.26
27	Ds.h sisma orizz	1.	0.	0.46056	18.95	18.95
27	Ds.v sisma vert	1.	0.	0.46056	3.16	3.16
28	Q1 variabile	1.	0.	0.46056	20.	20.

Table: Frame Loads - Distributed, Part 2 of 3

Frame	LoadPat	RelDistB	AbsDistA	AbsDistB	FOverLA	FOverLB
			m	m	KN/m	KN/m
28	SQ1.sx spinta var	1.	0.	0.46056	8.52	8.52
28	P.cop perm cop	1.	0.	0.46056	64.	62.
28	SP.sx spinta terra perm	1.	0.	0.46056	27.26	26.41
28	Ds.h sisma orizz	1.	0.	0.46056	18.95	18.95
28	Ds.v sisma vert	1.	0.	0.46056	3.16	3.16
29	Q1 variabile	1.	0.	0.46056	20.	20.
29	SQ1.sx spinta var	1.	0.	0.46056	8.52	8.52
29	P.cop perm cop	1.	0.	0.46056	62.	60.
29	SP.sx spinta terra perm	1.	0.	0.46056	26.41	25.56
29	Ds.h sisma orizz	1.	0.	0.46056	18.95	18.95
29	Ds.v sisma vert	1.	0.	0.46056	3.16	3.16
30	Q1 variabile	1.	0.	0.46056	20.	20.
30	SQ1.sx spinta var	1.	0.	0.46056	8.52	8.52
30	P.cop perm cop	1.	0.	0.46056	60.	60.
30	SP.sx spinta terra perm	1.	0.	0.46056	25.56	25.56
30	Ds.h sisma orizz	1.	0.	0.46056	18.95	18.95
30	Ds.v sisma vert	1.	0.	0.46056	3.16	3.16
31	Q1 variabile	1.	0.	0.46056	20.	20.
31	SQ1.dx spinta var	1.	0.	0.46056	-8.52	-8.52
31	P.cop perm cop	1.	0.	0.46056	60.	60.
31	SP.dx spinta terra perm	1.	0.	0.46056	-25.56	-25.56
31	Ds.v sisma vert	1.	0.	0.46056	3.16	3.16
32	Q1 variabile	1.	0.	0.46056	20.	20.
32	SQ1.dx spinta var	1.	0.	0.46056	-8.52	-8.52
32	P.cop perm cop	1.	0.	0.46056	60.	62.
32	SP.dx spinta terra perm	1.	0.	0.46056	-25.56	-26.41
32	Ds.v sisma vert	1.	0.	0.46056	3.16	3.16
33	Q1 variabile	1.	0.	0.46056	20.	20.
33	SQ1.dx spinta var	1.	0.	0.46056	-8.52	-8.52
33	P.cop perm cop	1.	0.	0.46056	62.	64.
33	SP.dx spinta terra perm	1.	0.	0.46056	-26.41	-27.26
33	Ds.v sisma vert	1.	0.	0.46056	3.16	3.16
34	Q1 variabile	1.	0.	0.46056	20.	20.
34	SQ1.dx spinta var	1.	0.	0.46056	-8.52	-8.52
34	P.cop perm cop	1.	0.	0.46056	64.	68.
34	SP.dx spinta terra perm	1.	0.	0.46056	-27.26	-28.97
34	Ds.v sisma vert	1.	0.	0.46056	3.16	3.16
35	Q1 variabile	1.	0.	0.46056	20.	20.
35	SQ1.dx spinta var	1.	0.	0.46056	-8.52	-8.52
35	P.cop perm cop	1.	0.	0.46056	68.	72.
35	SP.dx spinta terra perm	1.	0.	0.46056	-28.97	-30.67
35	Ds.v sisma vert	1.	0.	0.46056	3.16	3.16
36	Q1 variabile	0.2	0.	0.41857	20.	20.
36	Q1 variabile	0.4	0.41857	0.83713	20.	20.
36	Q1 variabile	0.6	0.83713	1.2557	20.	20.
36	Q1 variabile	0.8	1.2557	1.67427	20.	20.
36	Q1 variabile	1.	1.67427	2.09284	20.	20.
36	SQ1.dx spinta var	0.2	0.	0.41857	-8.52	-8.52

Table: Frame Loads - Distributed, Part 2 of 3

Frame	LoadPat	RelDistB	AbsDistA	AbsDistB	FOverLA	FOverLB
			m	m	KN/m	KN/m
36	SQ1.dx spinta var	0.4	0.41857	0.83713	-8.52	-8.52
36	SQ1.dx spinta var	0.6	0.83713	1.2557	-8.52	-8.52
36	SQ1.dx spinta var	0.8	1.2557	1.67427	-8.52	-8.52
36	SQ1.dx spinta var	1.	1.67427	2.09284	-8.52	-8.52
36	P.cop perm cop	1.	0.	2.09284	72.	94.
36	SP.dx spinta terra perm	1.	0.	2.09284	-30.67	-40.04
36	Ds.v sisma vert	1.	0.	2.09284	3.16	3.16
41	SQ1.dx spinta var	1.	0.	3.01042	-8.52	-8.52
41	SP.dx spinta terra perm	1.	0.	3.01042	-92.	-67.
42	SQ1.dx spinta var	1.	0.	2.84042	-8.52	-8.52
42	SP.dx spinta terra perm	1.	0.	2.84042	-67.	-42.
43	SQ1.sx spinta var	1.	0.	3.01042	8.52	8.52
43	SP.sx spinta terra perm	1.	0.	3.01042	92.	67.
43	Ds.h sisma orizz	1.	0.	3.01042	18.95	18.95
44	SQ1.sx spinta var	1.	0.	2.84042	8.52	8.52
44	SP.sx spinta terra perm	1.	0.	2.84042	67.	42.
44	Ds.h sisma orizz	1.	0.	2.84042	18.95	18.95

Table: Frame Loads - Distributed, Part 3 of 3

Table: Frame Loads - Distributed, Part 3 of 3

Frame	LoadPat	GUID
7	Ds.h sisma orizz	0a5cb39a-1420-4b7f-b94b-20823be0552d
8	Ds.h sisma orizz	8a84f733-b57f-4829-b06c-658cfb6ecf43
9	Ds.h sisma orizz	454875a7-0711-4c30-ba1c-ab06d08efca1
10	Ds.h sisma orizz	1d2b0b68-5034-4ca1-b375-f09b92e0e1f1
11	Ds.h sisma orizz	0fd34633-180d-4ac0-a509-22ae919d5281
12	Ds.h sisma orizz	28abf3e4-a0d8-4e68-aae0-cff33171fb9b
21	Q1 variabile	7a4e5fd4-8eca-47fc-865e-9097e68a4781
21	Q1 variabile	a692fd47-f0a5-48b1-a60b-f482eaf24b4c
21	Q1 variabile	ad993732-bf0d-4e2a-9026-c4ff1ee2f19a
21	Q1 variabile	4bb12030-edd7-4e5a-beca-560a8721d33c
21	Q1 variabile	6a975599-3440-4a41-8c78-42cbf666f8cd
21	SQ1.sx spinta var	0d5eca5a-42d9-473c-9402-3fa7a040793c
21	SQ1.sx spinta var	b7f25d3b-fb7a-4f9a-a19f-809e59c0b08e
21	SQ1.sx spinta var	8a50ee86-fb15-4ebc-a7bc-88ffa49a7585

Table: Frame Loads - Distributed, Part 3 of 3

Frame	LoadPat	GUID
21	SQ1.sx spinta var	30865292-b96d-4cc4-b7a1-2d1aee3d5096
21	SQ1.sx spinta var	0e45444f-0a4d-43a9-b97b-145c2af66ed9
21	P.cop perm cop	c1fb16a9-5597-45fe-8dcf-311df7775572
21	SP.sx spinta terra perm	c1fb16a9-5597-45fe-8dcf-311df7775572
21	Ds.h sisma orizz	b0a14a5c-49e1-480c-be4c-1760ef2dbe92
21	Ds.v sisma vert	74cf4634-3776-4661-ae53-05cf2084a760
26	Q1 variabile	f9df982d-5ebb-4ceb-b751-e7a88d5acd05
26	SQ1.sx spinta var	d76abb0f-8fc7-447e-aa05-f7059237166d
26	P.cop perm cop	fb6da18e-d0dc-438f-9946-94a68746cf13
26	SP.sx spinta terra perm	fb6da18e-d0dc-438f-9946-94a68746cf13
26	Ds.h sisma orizz	8b44c989-07b7-4a58-9fda-0432fcbc25b6
26	Ds.v sisma vert	03b86220-9e88-41a4-a29c-ed827a6c52c1
27	Q1 variabile	d9c25f41-30e8-498d-9323-f4eddb395202
27	SQ1.sx spinta var	e93eb219-4c93-42ac-8550-5727a0e17b71
27	P.cop perm cop	cd59e664-a32f-4c21-8060-53fd76560068
27	SP.sx spinta terra perm	cd59e664-a32f-4c21-8060-53fd76560068
27	Ds.h sisma orizz	e137ffbe-da73-4da4-b6d0-0f6ae2b0ca7c
27	Ds.v sisma vert	d5981973-0766-4e8a-a2de-bbf11e492a2f
28	Q1 variabile	e0bd4611-2a72-45bf-99a0-9a3cca204eaa
28	SQ1.sx spinta var	0239511e-3a23-42e8-90da-7ee2fccb6850
28	P.cop perm cop	c944e667-31d1-46d8-8480-992406cedb5c
28	SP.sx spinta terra perm	c944e667-31d1-46d8-8480-992406cedb5c
28	Ds.h sisma orizz	9c6bd39e-6ef5-4b56-8921-e9acf34f05fd
28	Ds.v sisma vert	cbd7d190-35b0-4193-9b9b-646c8227dc44
29	Q1 variabile	f53b8ed4-2fa1-49ec-bc4d-b766444a4443
29	SQ1.sx spinta var	a175bddf-76a8-4efa-ae36-c9edd28e7f77
29	P.cop perm cop	749dec6d-8b85-414f-9b1b-83e1a1609d3b
29	SP.sx spinta terra perm	749dec6d-8b85-414f-9b1b-83e1a1609d3b
29	Ds.h sisma orizz	46c8ca77-554c-4fe0-ad23-d0407d0a9d6f
29	Ds.v sisma vert	d3a1c914-8580-4c5f-a05f-83538fa2b49b

Table: Frame Loads - Distributed, Part 3 of 3

Frame	LoadPat	GUID
30	Q1 variabile	2bf173fa-e294-48bb-8679-042ef1706e68
30	SQ1.sx spinta var	21afe41f-375a-4f90-b7e7-131cb3b52758
30	P.cop perm cop	7e935071-7b8f-467c-b62b-f517e39649c8
30	SP.sx spinta terra perm	7e935071-7b8f-467c-b62b-f517e39649c8
30	Ds.h sisma orizz	a99fe707-09d4-4a92-b072-8f34892ca16b
30	Ds.v sisma vert	a3b25919-bec3-40c7-b460-942c3b969087
31	Q1 variabile	5a4af90c-69ff-4448-a31d-eaade8d226c0
31	SQ1.dx spinta var	afd883fb-ebff-468d-9dd1-fb9e53c88b0d
31	P.cop perm cop	b2ebbf1f-ac06-4e33-b1ed-90c7c431c547
31	SP.dx spinta terra perm	b2ebbf1f-ac06-4e33-b1ed-90c7c431c547
31	Ds.v sisma vert	798acc9c-4740-4f31-b584-0ebda62ac9f5
32	Q1 variabile	c6c8be49-2334-4ca0-b0f3-cc580ffa10b0
32	SQ1.dx spinta var	23c7fbb7-7b75-4490-83eb-0529da2946fa
32	P.cop perm cop	4b311764-4c2a-4017-932b-ef0846d63b6a
32	SP.dx spinta terra perm	4b311764-4c2a-4017-932b-ef0846d63b6a
32	Ds.v sisma vert	39df3c95-cbba-4789-ba5d-42f8d2d7bec5
33	Q1 variabile	fb73eb1f-4f8e-4b4c-9c22-267869a10c76
33	SQ1.dx spinta var	4bbda941-7247-4281-8b4a-c2597d66fd51
33	P.cop perm cop	6a4a5ed0-6181-40f7-9ad9-72082ec8bc25
33	SP.dx spinta terra perm	6a4a5ed0-6181-40f7-9ad9-72082ec8bc25
33	Ds.v sisma vert	ab37bd05-029b-4822-88de-5810a5487569
34	Q1 variabile	19cfcfb3-8f76-4670-9b30-b3c730350aeb
34	SQ1.dx spinta var	2f8142fa-b577-4e65-9ee1-3adf1bf6a293
34	P.cop perm cop	a23244f7-a37d-47fd-93f6-934d049864ad
34	SP.dx spinta terra perm	a23244f7-a37d-47fd-93f6-934d049864ad
34	Ds.v sisma vert	4f2c4926-fc63-4434-bb86-02c4afd644b3
35	Q1 variabile	40bf2a9b-df7b-4a7b-995a-2a896692243d
35	SQ1.dx spinta var	249bbce8-dd10-461c-9212-8c8cd791fd63
35	P.cop perm cop	dc5ebcb0-4296-46d1-bf89-43ed751f6c06
35	SP.dx spinta terra perm	dc5ebcb0-4296-46d1-bf89-43ed751f6c06

Table: Frame Loads - Distributed, Part 3 of 3

Frame	LoadPat	GUID
35	Ds.v sisma vert	80d2299e-a789-4a88-8606-6d53cfa47074
36	Q1 variabile	ba3e0bdf-2c06-4344-a083-cc1fb017cdd3
36	Q1 variabile	10b1ff34-9420-41cc-a664-9957188ffeb4
36	Q1 variabile	d8e18b97-b4a5-4a52-b01f-ddbfa843aa00
36	Q1 variabile	594c46b8-18b6-4ab1-8cf1-91cb5d1d98e6
36	Q1 variabile	76f342f7-e606-405b-98d7-cf6863f7af2f
36	SQ1.dx spinta var	5d9e3052-9f1f-4ce2-aab5-624440363a2c
36	SQ1.dx spinta var	30dbef31-d718-4f4b-abf3-b0aa876a3245
36	SQ1.dx spinta var	a6f6a456-6419-4933-852c-9c7e8136ed31
36	SQ1.dx spinta var	5d33074b-9d8a-49e2-bf77-99b5d9803076
36	SQ1.dx spinta var	2fc812e3-3db4-47c5-bcb3-d22bdbbd0c7d
36	P.cop perm cop	c5b3c415-aac2-4602-973b-0e0377f921c8
36	SP.dx spinta terra perm	c5b3c415-aac2-4602-973b-0e0377f921c8
36	Ds.v sisma vert	854eeb7d-c7c0-43ca-98a9-f97e1334f9f0
41	SQ1.dx spinta var	26b9b58f-d0a5-4761-830c-e4196078b255
41	SP.dx spinta terra perm	208dbdf2-a086-4102-bd0d-90ad0ab667fa
42	SQ1.dx spinta var	e18e7890-53cf-4984-81bb-5c520e64e0d8
42	SP.dx spinta terra perm	4af5faf7-5150-434b-ab9b-8c7eb3ef70c7
43	SQ1.sx spinta var	17b63377-1e83-4b87-8eeb-79706dd609f5
43	SP.sx spinta terra perm	6eb0aaee-ec88-409c-836f-5cd4629450ad
43	Ds.h sisma orizz	a0365ca6-f280-4b5d-96a2-1817f9be794c
44	SQ1.sx spinta var	39dedb31-8336-4ffd-9d3c-9f290d8ee60c
44	SP.sx spinta terra perm	f0f132e7-00b7-4b80-acff-57b1cabade44
44	Ds.h sisma orizz	876bca8f-f444-412f-980b-b805e227d98c

Table: Frame Loads - Gravity

Table: Frame Loads - Gravity

Frame	LoadPat	CoordSys	MultiplierX	MultiplierY	MultiplierZ
3	I h inerzia orizz	GLOBAL	0.0936	0.	0.
3	I v inerzia vert	GLOBAL	0.	0.	0.0468
4	I h inerzia orizz	GLOBAL	0.0936	0.	0.
4	I v inerzia vert	GLOBAL	0.	0.	0.0468

Table: Frame Loads - Gravity

Frame	LoadPat	CoordSys	MultiplierX	MultiplierY	MultiplierZ
7	I h inerzia orizz	GLOBAL	0.0936	0.	0.
7	I v inerzia vert	GLOBAL	0.	0.	0.0468
8	I h inerzia orizz	GLOBAL	0.0936	0.	0.
8	I v inerzia vert	GLOBAL	0.	0.	0.0468
9	I h inerzia orizz	GLOBAL	0.0936	0.	0.
9	I v inerzia vert	GLOBAL	0.	0.	0.0468
10	I h inerzia orizz	GLOBAL	0.0936	0.	0.
10	I v inerzia vert	GLOBAL	0.	0.	0.0468
11	I h inerzia orizz	GLOBAL	0.0936	0.	0.
11	I v inerzia vert	GLOBAL	0.	0.	0.0468
12	I h inerzia orizz	GLOBAL	0.0936	0.	0.
12	I v inerzia vert	GLOBAL	0.	0.	0.0468
13	I h inerzia orizz	GLOBAL	0.0936	0.	0.
13	I v inerzia vert	GLOBAL	0.	0.	0.0468
14	I h inerzia orizz	GLOBAL	0.0936	0.	0.
14	I v inerzia vert	GLOBAL	0.	0.	0.0468
15	I h inerzia orizz	GLOBAL	0.0936	0.	0.
15	I v inerzia vert	GLOBAL	0.	0.	0.0468
16	I h inerzia orizz	GLOBAL	0.0936	0.	0.
16	I v inerzia vert	GLOBAL	0.	0.	0.0468
17	I h inerzia orizz	GLOBAL	0.0936	0.	0.
17	I v inerzia vert	GLOBAL	0.	0.	0.0468
18	I h inerzia orizz	GLOBAL	0.0936	0.	0.
18	I v inerzia vert	GLOBAL	0.	0.	0.0468
21	I h inerzia orizz	GLOBAL	0.0936	0.	0.
21	I v inerzia vert	GLOBAL	0.	0.	0.0468
26	I h inerzia orizz	GLOBAL	0.0936	0.	0.
26	I v inerzia vert	GLOBAL	0.	0.	0.0468
27	I h inerzia orizz	GLOBAL	0.0936	0.	0.
27	I v inerzia vert	GLOBAL	0.	0.	0.0468
28	I h inerzia orizz	GLOBAL	0.0936	0.	0.
28	I v inerzia vert	GLOBAL	0.	0.	0.0468
29	I h inerzia orizz	GLOBAL	0.0936	0.	0.
29	I v inerzia vert	GLOBAL	0.	0.	0.0468
30	I h inerzia orizz	GLOBAL	0.0936	0.	0.
30	I v inerzia vert	GLOBAL	0.	0.	0.0468
31	I h inerzia orizz	GLOBAL	0.0936	0.	0.
31	I v inerzia vert	GLOBAL	0.	0.	0.0468
32	I h inerzia orizz	GLOBAL	0.0936	0.	0.
32	I v inerzia vert	GLOBAL	0.	0.	0.0468
33	I h inerzia orizz	GLOBAL	0.0936	0.	0.
33	I v inerzia vert	GLOBAL	0.	0.	0.0468
34	I h inerzia orizz	GLOBAL	0.0936	0.	0.
34	I v inerzia vert	GLOBAL	0.	0.	0.0468
35	I h inerzia orizz	GLOBAL	0.0936	0.	0.
35	I v inerzia vert	GLOBAL	0.	0.	0.0468
36	I h inerzia orizz	GLOBAL	0.0936	0.	0.
36	I v inerzia vert	GLOBAL	0.	0.	0.0468
41	I h inerzia orizz	GLOBAL	0.0936	0.	0.
41	I v inerzia vert	GLOBAL	0.	0.	0.0468
42	I h inerzia orizz	GLOBAL	0.0936	0.	0.
42	I v inerzia vert	GLOBAL	0.	0.	0.0468
43	I h inerzia orizz	GLOBAL	0.0936	0.	0.
43	I v inerzia vert	GLOBAL	0.	0.	0.0468

Table: Frame Loads - Gravity

Frame	LoadPat	CoordSys	MultiplierX	MultiplierY	MultiplierZ
44	I h inerzia orizz	GLOBAL	0.0936	0.	0.
44	I v inerzia vert	GLOBAL	0.	0.	0.0468

Table: Frame Section Assignments, Part 1 of 2

Table: Frame Section Assignments, Part 1 of 2

Frame	SectionType	AutoSelect	AnalSect	DesignSect	MatProp
3	Rectangular	N.A.	rigidi	rigidi	Default
4	Rectangular	N.A.	rigidi	rigidi	Default
7	Rectangular	N.A.	s90	s90	Default
8	Rectangular	N.A.	s90	s90	Default
9	Rectangular	N.A.	s90	s90	Default
10	Rectangular	N.A.	s90	s90	Default
11	Rectangular	N.A.	s90	s90	Default
12	Rectangular	N.A.	s90	s90	Default
13	Rectangular	N.A.	s90	s90	Default
14	Rectangular	N.A.	s90	s90	Default
15	Rectangular	N.A.	s90	s90	Default
16	Rectangular	N.A.	s90	s90	Default
17	Rectangular	N.A.	s90	s90	Default
18	Rectangular	N.A.	s90	s90	Default
21	Nonprismatic	N.A.	160-80	160-80	Default
26	Rectangular	N.A.	s80	s80	Default
27	Rectangular	N.A.	s80	s80	Default
28	Rectangular	N.A.	s80	s80	Default
29	Rectangular	N.A.	s80	s80	Default
30	Rectangular	N.A.	s80	s80	Default
31	Rectangular	N.A.	s80	s80	Default
32	Rectangular	N.A.	s80	s80	Default
33	Rectangular	N.A.	s80	s80	Default
34	Rectangular	N.A.	s80	s80	Default
35	Rectangular	N.A.	s80	s80	Default
36	Nonprismatic	N.A.	80-160	80-160	Default
41	Nonprismatic	N.A.	160-100	160-100	Default
42	Nonprismatic	N.A.	100-160	100-160	Default
43	Nonprismatic	N.A.	160-100	160-100	Default
44	Nonprismatic	N.A.	100-160	100-160	Default

Table: Frame Section Assignments, Part 2 of 2

Table: Frame Section Assignments, Part 2 of 2

Frame	NPSectType	NPSectLen	NPSectRD
		m	
3			
4			
7			
8			
9			
10			
11			
12			
13			

Table: Frame Section Assignments, Part 2 of 2

Frame	NPSectType	NPSectLen	NPSectRD
		m	
14			
15			
16			
17			
18			
21	Default		
26			
27			
28			
29			
30			
31			
32			
33			
34			
35			
36	Default		
41	Default		
42	Default		
43	Default		
44	Default		

Table: Frame Section Properties 01 - General, Part 1 of 6

Table: Frame Section Properties 01 - General, Part 1 of 6

SectionName	Material	Shape	t3	t2	Area	TorsConst
			m	m	m2	m4
100-160		Nonprismatic				
160-100		Nonprismatic				
160-80		Nonprismatic				
80-160		Nonprismatic				
rigidi	4000Psi	Rectangular	1.	1.	1.	0.140833
s100	C25/30	Rectangular	1.	1.	1.	0.140833
s130	C25/30	Rectangular	1.3	1.	1.3	0.229461
s160	C25/30	Rectangular	1.6	1.	1.6	0.326004
s80	C25/30	Rectangular	0.8	1.	0.8	0.087587
s90	C30/37	Rectangular	1.	0.9	0.9	0.112752

Table: Frame Section Properties 01 - General, Part 2 of 6

Table: Frame Section Properties 01 - General, Part 2 of 6

SectionName	I33	I22	I23	AS2	AS3	S33	S22
	m4	m4	m4	m2	m2	m3	m3
100-160							
160-100							
160-80							
80-160							
rigidi	0.083333	0.083333	0.	0.833333	0.833333	0.166667	0.166667
s100	0.083333	0.083333	0.	0.833333	0.833333	0.166667	0.166667
s130	0.183083	0.108333	0.	1.083333	1.083333	0.281667	0.216667
s160	0.341333	0.133333	0.	1.333333	1.333333	0.426667	0.266667
s80	0.042667	0.066667	0.	0.666667	0.666667	0.106667	0.133333

Table: Frame Section Properties 01 - General, Part 2 of 6

SectionName	I33	I22	I23	AS2	AS3	S33	S22
	m4	m4	m4	m2	m2	m3	m3
s90	0.075	0.06075	0.	0.75	0.75	0.15	0.135

Table: Frame Section Properties 01 - General, Part 3 of 6

Table: Frame Section Properties 01 - General, Part 3 of 6

SectionName	Z33	Z22	R33	R22	ConcCol	ConcBeam	Color
	m3	m3	m	m			
100-160							Yellow
160-100							Yellow
160-80							Blue
80-160							Yellow
rigidi	0.25	0.25	0.288675	0.288675	Yes	No	Red
s100	0.25	0.25	0.288675	0.288675	Yes	No	Yellow
s130	0.4225	0.325	0.375278	0.288675	Yes	No	Yellow
s160	0.64	0.4	0.46188	0.288675	Yes	No	Cyan
s80	0.16	0.2	0.23094	0.288675	Yes	No	Gray8Dark
s90	0.225	0.2025	0.288675	0.259808	Yes	No	Red

Table: Frame Section Properties 01 - General, Part 4 of 6

Table: Frame Section Properties 01 - General, Part 4 of 6

SectionName	TotalWt	TotalMass	FromFile	AMod	A2Mod	A3Mod	JMod
	KN	KN-s2/m					
100-160	184.573	18.82					
160-100	195.62	19.95					
160-80	62.767	6.4					
80-160	62.767	6.4					
rigidi	45.416	4.63	No	1.	3.	3.	1.
s100	0.	0.	No	1.	1.	1.	1.
s130	0.	0.	No	1.	1.	1.	1.
s160	0.	0.	No	1.	1.	1.	1.
s80	92.084	9.39	No	1.	1.	1.	1.
s90	138.387	14.11	No	1.	1.	1.	1.

Table: Frame Section Properties 01 - General, Part 5 of 6

Table: Frame Section Properties 01 - General, Part 5 of 6

SectionName	I2Mod	I3Mod	MMod	WMod	GUID
100-160					
160-100					
160-80					
80-160					
rigidi	30.	30.	1.	1.	
s100	1.	1.	1.	1.	
s130	1.	1.	1.	1.	
s160	1.	1.	1.	1.	
s80	1.	1.	1.	1.	
s90	1.	1.	1.	1.	

Table: Frame Section Properties 01 - General, Part 6 of 6

Table: Frame Section Properties 01 - General, Part 6 of 6

SectionName	Notes
100-160	Added 15/06/2018 12:21:39
160-100	Added 06/06/2018 18:26:03
160-80	Added 18/10/2021 10:28:41
80-160	Added 18/10/2021 10:28:14
rigidi	Added 06/06/2018 18:29:27
s100	Added 06/06/2018 18:22:28
s130	Added 06/06/2018 18:24:54
s160	Added 18/10/2021 14:41:50
s80	Added 06/06/2018 18:23:35
s90	Added 06/06/2018 18:24:42

Table: Frame Spring Assignments

Table: Frame Spring Assignments

Frame	Type	Stiffness KN/m/m	SimpleType	Dir1Type	Dir
3	Simple	6171.	Compression Only	Object Axes	-2
4	Simple	6171.	Compression Only	Object Axes	-2
7	Simple	6171.	Compression Only	Object Axes	-2
8	Simple	6171.	Compression Only	Object Axes	-2
9	Simple	6171.	Compression Only	Object Axes	-2
10	Simple	6171.	Compression Only	Object Axes	-2
11	Simple	6171.	Compression Only	Object Axes	-2
12	Simple	6171.	Compression Only	Object Axes	-2
13	Simple	6171.	Compression Only	Object Axes	-2
14	Simple	6171.	Compression Only	Object Axes	-2
15	Simple	6171.	Compression Only	Object Axes	-2
16	Simple	6171.	Compression Only	Object Axes	-2
17	Simple	6171.	Compression Only	Object Axes	-2
18	Simple	6171.	Compression Only	Object Axes	-2
21	Simple	18239.	Compression Only	Object Axes	-2
26	Simple	8205.	Compression Only	Object Axes	-2
27	Simple	8205.	Compression Only	Object Axes	-2
28	Simple	8205.	Compression Only	Object Axes	-2
29	Simple	8205.	Compression Only	Object Axes	-2
30	Simple	8205.	Compression Only	Object Axes	-2
31	Simple	8205.	Compression Only	Object Axes	-2
32	Simple	8205.	Compression Only	Object Axes	-2
33	Simple	8205.	Compression Only	Object Axes	-2
34	Simple	8205.	Compression Only	Object Axes	-2
35	Simple	8205.	Compression Only	Object Axes	-2
36	Simple	18239.	Compression Only	Object Axes	-2
41	Simple	7618.	Compression Only	Object Axes	-2
42	Simple	7618.	Compression Only	Object Axes	-2
43	Simple	7618.	Compression Only	Object Axes	-2
44	Simple	7618.	Compression Only	Object Axes	-2

Table: Joint Coordinates, Part 1 of 2

Table: Joint Coordinates, Part 1 of 2

Joint	CoordSys	CoordType	XorR	Y	Z	SpecialJt	GlobalX
			m	m	m		m
8	GLOBAL	Cartesian	-3.00912	0.	1.4263	No	-3.00912
9	GLOBAL	Cartesian	-2.52471	0.	1.25835	No	-2.52471
10	GLOBAL	Cartesian	-2.03102	0.	1.12008	No	-2.03102
11	GLOBAL	Cartesian	-1.52984	0.	1.012	No	-1.52984
12	GLOBAL	Cartesian	-1.02303	0.	0.93452	No	-1.02303
13	GLOBAL	Cartesian	-0.51246	0.	0.88791	No	-0.51246
14	GLOBAL	Cartesian	4.422E-10	0.	0.87236	No	4.422E-10
15	GLOBAL	Cartesian	0.51246	0.	0.88791	No	0.51246
16	GLOBAL	Cartesian	1.02303	0.	0.93452	No	1.02303
17	GLOBAL	Cartesian	1.52984	0.	1.012	No	1.52984
18	GLOBAL	Cartesian	2.03102	0.	1.12008	No	2.03102
19	GLOBAL	Cartesian	2.52471	0.	1.25835	No	2.52471
20	GLOBAL	Cartesian	3.00912	0.	1.4263	No	3.00912
22	GLOBAL	Cartesian	-3.97283	0.	1.4263	No	-3.97283
24	GLOBAL	Cartesian	3.97283	0.	1.4263	No	3.97283
26	GLOBAL	Cartesian	-2.2	0.	8.38937	No	-2.2
27	GLOBAL	Cartesian	-1.78964	0.	8.59846	No	-1.78964
28	GLOBAL	Cartesian	-1.35967	0.	8.76351	No	-1.35967
29	GLOBAL	Cartesian	-0.91481	0.	8.88271	No	-0.91481
30	GLOBAL	Cartesian	-0.45993	0.	8.95475	No	-0.45993
31	GLOBAL	Cartesian	-2.009E-10	0.	8.97886	No	-2.009E-10
32	GLOBAL	Cartesian	0.45993	0.	8.95475	No	0.45993
33	GLOBAL	Cartesian	0.91481	0.	8.88271	No	0.91481
34	GLOBAL	Cartesian	1.35967	0.	8.76351	No	1.35967
35	GLOBAL	Cartesian	1.78964	0.	8.59846	No	1.78964
36	GLOBAL	Cartesian	2.2	0.	8.38937	No	2.2
39	GLOBAL	Cartesian	3.97283	0.	7.27715	No	3.97283
40	GLOBAL	Cartesian	-3.97283	0.	7.27715	No	-3.97283
41	GLOBAL	Cartesian	3.97283	0.	4.43673	No	3.97283
42	GLOBAL	Cartesian	-3.97283	0.	4.43673	No	-3.97283

Table: Joint Coordinates, Part 2 of 2

Table: Joint Coordinates, Part 2 of 2

Joint	GlobalY	GlobalZ	GUID
	m	m	
8	0.	1.4263	d05998e5-b4b7-403a-be7d-8d723a0974fb
9	0.	1.25835	aba66953-3a38-464e-962c-33c71932638b
10	0.	1.12008	3c32dc7c-d30b-4204-9749-76ca3ccc188d
11	0.	1.012	775f706a-850e-43c4-8319-24d05b1f5cae
12	0.	0.93452	75a5dddd-e8e3-4203-83d4-96e3fcc24bc8
13	0.	0.88791	4d761e82-3047-43d9-9a4e-977056a772e1
14	0.	0.87236	918e6494-e36d-4782-93de-acb604305a10
15	0.	0.88791	203961fe-94b3-4c45-9d3c-cd004d2d6ee5

Table: Joint Coordinates, Part 2 of 2

Joint	GlobalY	GlobalZ	GUID
	m	m	
16	0.	0.93452	a3f109ec-6009-4400-8f65-88dfead0b8a5
17	0.	1.012	bb507f29-25ef-40c4-a347-44572b8d1b13
18	0.	1.12008	4ac45268-acd5-4dff-a40f-e7f900b0e7a7
19	0.	1.25835	8a203662-9fc8-45b2-8f56-5ebbaabfa1b0
20	0.	1.4263	458295dd-7dd4-436a-bb70-c93a1e92c348
22	0.	1.4263	eca749a7-7964-43bb-a619-bb1368b32aea
24	0.	1.4263	c970da74-5407-4906-b51e-8eea4ca159f2
26	0.	8.38937	f4b7d9aa-ba9c-4154-bab0-70112a78e547
27	0.	8.59846	1e377589-4131-4701-9feb-14ca29034205
28	0.	8.76351	68f10084-c9e5-48b0-a1fc-16b38930e730
29	0.	8.88271	c7557d45-b20e-4038-bf67-6976cfe28e46
30	0.	8.95475	25995ed2-cc50-43f8-a278-43625f4ac822
31	0.	8.97886	6298a6f6-0ff2-41f3-8154-e828cae4e1d0
32	0.	8.95475	c45d4eae-af44-4d7c-9cc6-d719a22695df
33	0.	8.88271	be2e33e3-7c69-4d90-b4b4-61815f39f438
34	0.	8.76351	36a7b248-8148-4a62-aed5-94038b34103d
35	0.	8.59846	72601d29-5e62-481b-92ab-b9b5f7ba4d90
36	0.	8.38937	fab76569-72f7-45b9-a465-0b27d0e5e307
39	0.	7.27715	5614e039-8ae9-4ef4-ae2d-61f7a0a1a852
40	0.	7.27715	f0cd7d9f-4ef3-4e34-9745-47d31cbd88a8
41	0.	4.43673	d4dee00f-044b-440d-8328-c1185267e425
42	0.	4.43673	fa05261e-f27f-4977-ab01-6ce60f28b5d4

Table: Load Case Definitions, Part 1 of 3

Table: Load Case Definitions, Part 1 of 3

Case	Type	InitialCond	ModalCase	BaseCase	MassSource	DesTypeOpt	DesignType
DEAD	LinStatic	Zero				Prog Det	Other
MODAL	LinModal	Zero				Prog Det	Other
P.P. peso proprio	LinStatic	Zero				Prog Det	Dead
P.cop perm cop	LinStatic	Zero				Prog Det	Dead
SP.sx spinta terra perm	LinStatic	Zero				Prog Det	Dead

Table: Load Case Definitions, Part 1 of 3

Case	Type	InitialCond	ModalCase	BaseCase	MassSource	DesTypeOpt	DesignType
SP.dx spinta terra perm	LinStatic	Zero				Prog Det	Dead
Q1 variabile	LinStatic	Zero				Prog Det	Dead
SQ1.sx spinta var	LinStatic	Zero				Prog Det	Dead
SQ1.dx spinta var	LinStatic	Zero				Prog Det	Dead
Ds.h sisma orizz	LinStatic	Zero				Prog Det	Dead
Ds.v sisma vert	LinStatic	Zero				Prog Det	Dead
I h(inerzia orizz)	LinStatic	Zero				Prog Det	Dead
I v(inerzia vert)	LinStatic	Zero				Prog Det	Dead
SLU 1-NL	NonStatic	Zero				Prog Det	Dead
SLU 2-NL	NonStatic	Zero				Prog Det	Dead
SLU 3-NL	NonStatic	Zero				Prog Det	Dead
SLU 4-NL	NonStatic	Zero				Prog Det	Dead
SLU 5-NL	NonStatic	Zero				Prog Det	Dead
SLU 6-NL	NonStatic	Zero				Prog Det	Dead
SLU 7-NL	NonStatic	Zero				Prog Det	Dead
SLE-C-NL	NonStatic	Zero				Prog Det	Dead
SLE-F-1-NL	NonStatic	Zero				Prog Det	Dead
SLE-F-2-NL	NonStatic	Zero				Prog Det	Dead
SLE-F-3-NL	NonStatic	Zero				Prog Det	Dead
SLE-QP-NL	NonStatic	Zero				Prog Det	Dead
SLV1-NL	NonStatic	Zero				Prog Det	Dead
SLV2-NL	NonStatic	Zero				Prog Det	Dead
SLV3-NL	NonStatic	Zero				Prog Det	Dead
SLV4-NL	NonStatic	Zero				Prog Det	Dead
SLV5-NL	NonStatic	Zero				Prog Det	Dead
SLV6-NL	NonStatic	Zero				Prog Det	Dead
SLV7-NL	NonStatic	Zero				Prog Det	Dead
SLV8-NL	NonStatic	Zero				Prog Det	Dead
SLV9-NL	NonStatic	Zero				Prog Det	Dead
SLV10-NL	NonStatic	Zero				Prog Det	Dead
SLV11-NL	NonStatic	Zero				Prog Det	Dead
SLV12-NL	NonStatic	Zero				Prog Det	Dead
SLV13-NL	NonStatic	Zero				Prog Det	Dead
SLV14-NL	NonStatic	Zero				Prog Det	Dead
SLV15-NL	NonStatic	Zero				Prog Det	Dead
SLV16-NL	NonStatic	Zero				Prog Det	Dead
test	NonStatic	Zero				Prog Det	Dead

Table: Load Case Definitions, Part 2 of 3

Table: Load Case Definitions, Part 2 of 3

Case	DesActOpt	DesignAct	AutoType	RunCase	CaseStatus	GUID
DEAD	Prog Det	Other	None	No	Not Run	61e075fa-4615-445d-9bf1-3e829e5e2485
MODAL	Prog Det	Other	None	No	Not Run	169aa1e4-0664-40fb-8855-4706eb8f3c51

Table: Load Case Definitions, Part 2 of 3

Case	DesActOpt	DesignAct	AutoType	RunCase	CaseStatus	GUID
P.P. peso proprio	Prog Det	Non-Composite	None	Yes	Finished	ee662754-90b8-49c6-8bb1-31c3d450ce6d
P.cop perm cop	Prog Det	Non-Composite	None	Yes	Finished	4ca4802f-7d22-401c-bec8-5a71fd16ca02
SP.sx spinta terra perm	Prog Det	Non-Composite	None	Yes	Finished	a6fcd498-9286-4e5c-bcdd-e89e45b009ab
SP.dx spinta terra perm	Prog Det	Non-Composite	None	Yes	Finished	e7cf1275-0213-4a95-8e5f-6bc4e5b7f6a4
Q1 variabile	Prog Det	Non-Composite	None	Yes	Finished	7e385fbf-2871-4327-b398-860146a51825
SQ1.sx spinta var	Prog Det	Non-Composite	None	Yes	Finished	02a3ee45-bbf1-4478-ad57-5df475832dce
SQ1.dx spinta var	Prog Det	Non-Composite	None	Yes	Finished	a96933c9-3b38-4e3b-8c2e-18238e6e6f96
Ds.h sisma orizz	Prog Det	Non-Composite	None	Yes	Finished	adc396f0-42f0-40dd-bf0b-39dfa31ce1e7
Ds.v sisma vert	Prog Det	Non-Composite	None	Yes	Finished	8a23f11e-5ab9-462b-a2c0-b945f95c7326
I h(inerzia orizz)	Prog Det	Non-Composite	None	Yes	Finished	d1e6111c-4ec9-4657-a743-7ca9894eef10
I v(inerzia vert)	Prog Det	Non-Composite	None	Yes	Finished	c71d2618-de49-4919-b327-315224097630
SLU 1-NL	Prog Det	Non-Composite	None	Yes	Finished	5a421cdc-648f-4ed5-9c9b-aec0630eee47
SLU 2-NL	Prog Det	Non-Composite	None	Yes	Finished	ee382d09-3494-4501-b11e-a9c3ad70180b
SLU 3-NL	Prog Det	Non-Composite	None	Yes	Finished	1b926024-d042-4fd6-a83f-3dc6fe8fe067
SLU 4-NL	Prog Det	Non-Composite	None	Yes	Finished	a8be7cfa-661c-497c-a846-b97e51797c65
SLU 5-NL	Prog Det	Non-Composite	None	Yes	Finished	cd67d73f-296b-4108-9a0e-3f7e8c3dec4b
SLU 6-NL	Prog Det	Non-Composite	None	Yes	Finished	c90dc255-3047-45f4-bc63-5a24e28a5c3d
SLU 7-NL	Prog Det	Non-Composite	None	Yes	Finished	ae1791a1-6fb8-4af5-8f43-00e732268a86
SLE-C-NL	Prog Det	Non-Composite	None	Yes	Finished	3d22d300-b409-4d0f-b3c4-e26197704b81
SLE-F-1-NL	Prog Det	Non-Composite	None	Yes	Finished	a47f43ea-28bf-47af-8885-5ddb8f878970
SLE-F-2-NL	Prog Det	Non-Composite	None	Yes	Finished	883f8464-ac3e-4f87-b48c-8f98be932b73
SLE-F-3-NL	Prog Det	Non-Composite	None	Yes	Finished	755c38c6-5223-4701-b9d7-2521cde48ac6
SLE-QP-NL	Prog Det	Non-Composite	None	Yes	Finished	7a549ed0-a062-4ce5-845b-f20db8b056a5
SLV1-NL	Prog Det	Non-Composite	None	Yes	Finished	b35369ad-c742-4630-90b6-cd109f2bb2b3
SLV2-NL	Prog Det	Non-Composite	None	Yes	Finished	addb3ada-3f23-4ff3-bc75-3eb8cf8f9dab
SLV3-NL	Prog Det	Non-Composite	None	Yes	Finished	fc978327-38dd-4e34-ac87-46aa32faacfb
SLV4-NL	Prog Det	Non-Composite	None	Yes	Finished	a06dc44a-e850-4860-9d04-e425da3fe449
SLV5-NL	Prog Det	Non-Composite	None	Yes	Finished	c9ba7be1-75cf-4e6e-837e-0c62193b8e0a
SLV6-NL	Prog Det	Non-Composite	None	Yes	Finished	0b9a594d-8eb4-4752-b316-74ac999bfbb1
SLV7-NL	Prog Det	Non-Composite	None	Yes	Finished	18bfe53a-9772-4e9f-853e-cdf63f75f6c3

Table: Load Case Definitions, Part 2 of 3

Case	DesActOpt	DesignAct	AutoType	RunCase	CaseStatus	GUID
SLV8-NL	Prog Det	Non-Composite	None	Yes	Finished	ff4eb152-0d39-476b-85c0-78e0bb6deb37
SLV9-NL	Prog Det	Non-Composite	None	Yes	Finished	61853fd9-9f53-4539-9e12-37d96b0348e2
SLV10-NL	Prog Det	Non-Composite	None	Yes	Finished	8d63bece-bfaa-498f-9246-de6ac48e1782
SLV11-NL	Prog Det	Non-Composite	None	Yes	Finished	91b7936f-f842-4407-816e-1750d5b7cf99
SLV12-NL	Prog Det	Non-Composite	None	Yes	Finished	f4ce2189-7bae-472f-a42d-8f564c83cf04
SLV13-NL	Prog Det	Non-Composite	None	Yes	Finished	b5f90414-e2e6-4b6b-8b5e-c51770b2e927
SLV14-NL	Prog Det	Non-Composite	None	Yes	Finished	5ea00cbb-409d-420e-bd9a-03c6a7b41208
SLV15-NL	Prog Det	Non-Composite	None	Yes	Finished	22e36208-ec2f-4308-b4aa-934a18deed32
SLV16-NL	Prog Det	Non-Composite	None	Yes	Finished	ee2dd0a1-6d79-4342-b949-e03ede794f59
test	Prog Det	Non-Composite	None	Yes	Finished	a4c6a3d1-0b85-49fa-ac6e-66dd84967e0a

Table: Load Case Definitions, Part 3 of 3

Table: Load Case Definitions, Part 3 of 3

Case	Notes
DEAD	
MODAL	
P.P. peso proprio	
P.cop perm cop	
SP.sx spinta terra perm	
SP.dx spinta terra perm	
Q1 variabile	
SQ1.sx spinta var	
SQ1.dx spinta var	
Ds.h sisma orizz	
Ds.v sisma vert	
I h(inerzia orizz)	
I v(inerzia vert)	
SLU 1-NL	
SLU 2-NL	
SLU 3-NL	
SLU 4-NL	
SLU 5-NL	
SLU 6-NL	
SLU 7-NL	
SLE-C-NL	

Table: Load Case Definitions, Part 3 of 3

Case	Notes
SLE-F-1-NL	
SLE-F-2-NL	
SLE-F-3-NL	
SLE-QP-NL	
SLV1-NL	
SLV2-NL	
SLV3-NL	
SLV4-NL	
SLV5-NL	
SLV6-NL	
SLV7-NL	
SLV8-NL	
SLV9-NL	
SLV10-NL	
SLV11-NL	
SLV12-NL	
SLV13-NL	
SLV14-NL	
SLV15-NL	
SLV16-NL	
test	

Table: Load Pattern Definitions

Table: Load Pattern Definitions

LoadPat	DesignType	SelfWtMult	AutoLoad	GUID	Notes
P.P. peso proprio	Dead	1.		cce0a344-cd98-4959-97bd-11baf6e416f8	
P.cop perm cop	Dead	0.		b3dbea9f-1ecf-4bb4-951c-dc2f0f21522a	
SP.sx spinta terra perm	Dead	0.		0514b3ca-5495-48e5-a89b-573cc79f6314	
SP.dx spinta terra perm	Dead	0.		893526e6-a168-413a-bec3-1162e96d6ece	
Q1 variabile	Dead	0.		778a3705-f0b2-4dd8-9b6f-97d4781c6407	
SQ1.sx spinta var	Dead	0.		f66a5558-2083-43a9-a6a6-562465c38826	
SQ1.dx spinta var	Dead	0.		faba00b2-6037-407c-bbfd-b7383f1f203d	
Ds.h sisma orizz	Dead	0.		8059203b-9e17-4804-83a2-9fee48c5ed20	
Ds.v sisma vert	Dead	0.		41d782ce-d5d5-42bf-ac59-47a7571bae36	
I h inerzia orizz	Dead	0.		5e9bcdff-a47b-4e48-b51c-b6034379d0eb	
I v inerzia vert	Dead	0.		af4e61e3-a058-440b-847d-59f69a226986	

Table: Material Properties 01 - General, Part 1 of 2

Table: Material Properties 01 - General, Part 1 of 2

Material	Type	Grade	SymType	TempDependd	Color	GUID
4000Psi	Concrete		Isotropic	No	Green	
A416Gr270	Tendon		Uniaxial	No	Green	
A615Gr60	Rebar		Uniaxial	No	Yellow	
A992Fy50	Steel		Isotropic	No	Blue	
B450C	Rebar		Uniaxial	No	Green	
C25/30	Concrete		Isotropic	No	Gray8Dark	
C28/35	Concrete		Isotropic	No	Magenta	
C30/37	Concrete	C30/37	Isotropic	No	Magenta	6bcf3f5c-ca9c-4e44-b91b-256a974ef7c9

Table: Material Properties 01 - General, Part 2 of 2

Table: Material Properties 01 - General, Part 2 of 2

Material	Notes
4000Psi	Customary f'c 4000 psi 19/12/2017 12:28:55
A416Gr270	ASTM A416 Grade 270 06/06/2018 18:36:44
A615Gr60	ASTM A615 Grade 60 19/12/2017 13:07:49
A992Fy50	ASTM A992 Grade 50 06/06/2018 18:36:44
B450C	Italy NTC2008 B450C added 20/12/2017 12:14:54
C25/30	Italy UNI EN 206-1:2006 e UNI 11104:2004 C25/30 added 06/06/2018 18:24:25
C28/35	Italy UNI EN 206-1:2006 e UNI 11104:2004 C28/35 added 20/12/2017 10:59:52
C30/37	Europe EN 1992-1-1 per EN 206-1 C30/37 added 05/10/2021 09:31:44

Table: Program Control, Part 1 of 2

Table: Program Control, Part 1 of 2

ProgramName	Version	ProgLevel	LicenseNum	LicenseOS	LicenseSC	LicenseHT	CurrUnits
SAP2000	23.3.1	Advanced	2008*1LTSE39D6WF3JHP	No	No	No	KN, m, C

Table: Program Control, Part 2 of 2

Table: Program Control, Part 2 of 2

SteelCode	ConcCode	AlumCode	ColdCode	RegenHinge
AISC 360-10	Italian NTC 2008	AA 2015	AISI-ASD96	Yes