ALLEGATI

TIRRENO POWER
PIANO DI MONITORAGGIO E CONTROLLO LDAR
CENTRALE TERMOELETTRICA “TORREVALDALIGA SUD”

CAMPAGNA 2022 DI MISURAZIONE E RIDUZIONE DELLE EMISSIONI FUGGITIVE

ORION
WWW.ORION-SRL.IT

ORION S.r.l.

A: Via A. Volta, 25/b - 35030 Veggiano (PD) - Italy
P: +39 049 9006.911 - **F:** +39 049 9006939
E: info@orion-srl.it - **W:** www.orion-srl.it

SOMMARIO

1 SCHEDE DI CALIBRAZIONE STRUMENTAZIONE IMPIEGATA……
2 SCHEDE DI RILEVAZIONE EMISSIONI PER VALORI MAGGIORI O UGUALI ALLA SOGLIA DI ATTENZIONE……
3 SCHEDE DI RILEVAZIONE EMISSIONI PER VALORI MAGGIORI O UGUALI ALLA SOGLIA DI PERDITA……
4 ALLEGATI TABULARI……
5 ALLEGATI GRAFICI……
6 SEGNALAZIONE DELLE SORGENTI DI EMISSIONE FUORI SOGLIA……

ORION S.r.l.

A: Via A. Volta, 25/b - 35030 Veggiano (PD) - Italy
P: +39 049 9006.911 - **F:** +39 049 9006939
E: info@orion-srl.it - **W:** www.orion-srl.it

1 SCHEDE DI CALIBRAZIONE STRUMENTAZIONE IMPIEGATA

ORION S.r.l.
Via A. Volta, 25/B - 35030 Veggiano (PD)-Italy
Tel. +39 049 9006911 - Fax +39 049 9006939
info@orion-srl.it - www.orion-srl.it

ORION
A MULTILEVEL TECHNOLOGY COMPANY

RAPPORTO DI TARATURA

N° Rapporto: RT.2020_00122/01

SPECIFICA DEL MISURATORE

Descrizione : Analizzatore di idrocarburi totali FID/PID
Costruttore: Thermo
N° di serie 20200904450

Modello : ☑ TVA2020 ☐ TVA1000B
Rivelatore: ☑ F.I.D. ☐ P.I.D.

PARAMETRI OPERATIVI

Parametro:	Unità di misura:	Valore letto:
Pressione cartuccia idrogeno	psi	1400
Pressione gas di trasporto	psi	13
Composto di riferimento:	-	Metano
Fattore di risposta	*RF* < 10	1

IDENTIFICAZIONE

Commessa N: 211000892 Richiedente: **TIRRENO POWER**

Motivo: Controllo e manutenzione ordinaria

Frequenza taratura : ☑ Giornaliera ☐ Programmata ☐ Richiesta ESE

Stato Analizzatore : ☑ In Servizio (Misurazioni) ☐ Fuori Servizio (Manutenzione)

Prossima taratura :

GAS DI TARATURA

Gas campione:	Conc. ppm	Certificato gas campione N°	Scadenza garanzia di stabilità	Stato Bombola
Aria sintetica	COV <0,1	24318	14-set-23	60 bar
Metano	0.1000	568129	1-mar-23	90 bar
Metano	99.6	46941	21-feb-23	80 bar
Metano	9518	37132	18/02/2023	70 bar

Fornitore: Società Italiana Acetilene e Derivati

ORION S.r.l.
Via A. Volta, 25/B - 35030 Veggiano (PD)-Italy
Tel. +39 049 9006911 - Fax +39 049 9006939
info@orion-srl.it - www.orion-srl.it

ORION
A MULTILEVEL TECHNOLOGY COMPANY

TABELLA DI TARATURA PER LIVELLI MULTIPLI DI GAS CAMPIONE

Gas campione	Incertezza Stimata		Errore ammissibile	Controllo Positivo
Aria sintetica	-	incertezza estesa % aria di zero	-	
Metano	1,92	incertezza estesa % gas 1° livello		
Metano	2,05	incertezza estesa % gas 2° livello		
	0,31	errore relativo % della taratura 1° livello	≤ 10%	☑
	0,00	errore relativo % della taratura 2° livello	≤ 10%	☑
	2,83	Incertezza stimata u %		

TARATURA
Regolazione della misura

Gas campione	Counts/ppm FID	concentraz. gas campione	Valore misurato	Valore elettrico	Counts/ ppm	Errore Relativo	
Aria sintetica	<6000|	<0,1	0,0	4566	-	-	
Metano	| 160..320 |	0.1000	9556	2515456	262,8	#VALORE!	taratura 1° livello
Metano	| 160..320 |	99.6	99,8	30422	259,1	#VALORE!	taratura 2° livello

Esito della taratura:
Se Errore Relativo ≤ 10% = POSITIVO
Se Errore Relativo > 10% = NEGATIVO

☑ POSITIVO ☐ NEGATIVO

NOTE

Counts/ppm devono essere compresi tra: | 160..320 | con rivelatore FID e | 10..35 | con rivelatore PID
Incertezza stimata pari a un livello di confidenza del 68% (norma CEI 9)
Fattore di risposta applicato nelle misurazioni A = 1
L'analizzatore viene messo: in servizio per le misurazioni - fuori servizio per manutenzione
Taratura eseguita a due livelli di concentrazione

Il Tecnico | Data emissione

Nome Cognome: ANGELO GIANCIPPOLI | 21-giu-22

Firma:

ORION S.r.l.
Via A. Volta, 25/B - 35030 Veggiano (PD)-Italy
Tel. +39 049 9006911 - Fax +39 049 9006939
info@orion-srl.it - www.orion-srl.it

ORION
A MULTILEVEL TECHNOLOGY COMPANY

RAPPORTO DI TARATURA

N° Rapporto: RT.2020_00122/01

SPECIFICA DEL MISURATORE

Descrizione : Analizzatore di idrocarburi totali FID/PID
Costruttore: Thermo
N° di serie 20200904450

Modello : ☑ TVA2020 ☐ TVA1000B
Rivelatore: ☑ F.I.D. ☐ P.I.D.

PARAMETRI OPERATIVI

Parametro:	Unità di misura:	Valore letto:
Pressione cartuccia idrogeno	psi	1400
Pressione gas di trasporto	psi	13
Composto di riferimento:	-	Metano
Fattore di risposta	*RF* < 10	1

IDENTIFICAZIONE

Commessa N: 211000892 Richiedente: **TIRRENO POWER**

Motivo: Controllo e manutenzione ordinaria

Frequenza taratura : ☑ Giornaliera ☐ Programmata ☐ Richiesta ESE

Stato Analizzatore : ☑ In Servizio (Misurazioni) ☐ Fuori Servizio (Manutenzione)

Prossima taratura :

GAS DI TARATURA

Gas campione:	Conc. ppm	Certificato gas campione N°	Scadenza garanzia di stabilità	Stato Bombola
Aria sintetica	COV <0,1	24318	14-set-23	60 bar
Metano	0.1000	568129	1-mar-23	90 bar
Metano	99.6	46941	21-feb-23	80 bar
Metano	9518	37132	18/02/2023	70 bar

Fornitore: Società Italiana Acetilene e Derivati

ORION S.r.l.
Via A. Volta, 25/B - 35030 Veggiano (PD)-Italy
Tel. +39 049 9006911 - Fax +39 049 9006939
info@orion-srl.it - www.orion-srl.it

ORION
A MULTILEVEL TECHNOLOGY COMPANY

TABELLA DI TARATURA PER LIVELLI MULTIPLI DI GAS CAMPIONE

Gas campione	Incertezza Stimata		Errore ammissibile	Controllo Positivo
Aria sintetica	-	incertezza estesa % aria di zero	-	
Metano	1,92	incertezza estesa % gas 1° livello		
Metano	2,05	incertezza estesa % gas 2° livello		
	0,31	errore relativo % della taratura 1° livello	≤ 10%	☑
	0,00	errore relativo % della taratura 2° livello	≤ 10%	☑
	2,83	Incertezza stimata u %		

TARATURA
Regolazione della misura

Gas campione	Counts/ppm FID	concentraz. gas campione	Valore misurato	Valore elettrico	Counts/ ppm	Errore Relativo	
Aria sintetica	<6000|	<0,1	0,0	4566	-	-	
Metano	| 160..320 |	0.1000	9556	2515456	262,8	#VALORE!	taratura 1° livello
Metano	| 160..320 |	99.6	99,8	30422	259,1	#VALORE!	taratura 2° livello

Esito della taratura:
Se Errore Relativo ≤ 10% = POSITIVO
Se Errore Relativo > 10% = NEGATIVO

☑ POSITIVO ☐ NEGATIVO

NOTE

Counts/ppm devono essere compresi tra: | 160..320 | con rivelatore FID e | 10..35 | con rivelatore PID
Incertezza stimata pari a un livello di confidenza del 68% (norma CEI 9)
Fattore di risposta applicato nelle misurazioni A = 1
L'analizzatore viene messo: in servizio per le misurazioni - fuori servizio per manutenzione
Taratura eseguita a due livelli di concentrazione

Il Tecnico | Data emissione

Nome Cognome: ANGELO GIANCIPPOLI | 23-giu-23

Firma:

ORION S.r.l.
Via A. Volta, 25/B - 35030 Veggiano (PD)-Italy
Tel. +39 049 9006911 - Fax +39 049 9006939
info@orion-srl.it - www.orion-srl.it

ORION
A MULTILEVEL TECHNOLOGY COMPANY

RAPPORTO DI TARATURA

N° Rapporto: RT.2020_00122/01

SPECIFICA DEL MISURATORE

Descrizione : Analizzatore di idrocarburi totali FID/PID
Costruttore: Thermo
N° di serie 20200904450

Modello : ☑ TVA2020 ☐ TVA1000B
Rivelatore: ☑ F.I.D. ☐ P.I.D.

PARAMETRI OPERATIVI

Parametro:	Unità di misura:	Valore letto:
Pressione cartuccia idrogeno	psi	1400
Pressione gas di trasporto	psi	13
Composto di riferimento:	-	Metano
Fattore di risposta	*RF* < 10	1

IDENTIFICAZIONE

Commessa N: 211000892 Richiedente: **TIRRENO POWER**

Motivo: Controllo e manutenzione ordinaria

Frequenza taratura : ☑ Giornaliera ☐ Programmata ☐ Richiesta ESE

Stato Analizzatore : ☑ In Servizio (Misurazioni) ☐ Fuori Servizio (Manutenzione)

Prossima taratura :

GAS DI TARATURA

Gas campione:	Conc. ppm	Certificato gas campione N°	Scadenza garanzia di stabilità	Stato Bombola
Aria sintetica	COV <0,1	24318	14-set-23	60 bar
Metano	0.1000	568129	1-mar-23	90 bar
Metano	99.6	46941	21-feb-23	80 bar
Metano	9518	37132	18/02/2023	70 bar

Fornitore: Società Italiana Acetilene e Derivati

ORION S.r.l.
Via A. Volta, 25/B - 35030 Veggiano (PD)-Italy
Tel. +39 049 9006911 - Fax +39 049 9006939
info@orion-srl.it - www.orion-srl.it

ORION
A MULTILEVEL TECHNOLOGY COMPANY

TABELLA DI TARATURA PER LIVELLI MULTIPLI DI GAS CAMPIONE

Gas campione	Incertezza Stimata		Errore ammissibile	Controllo Positivo
Aria sintetica	-	incertezza estesa % aria di zero	-	
Metano	1,92	incertezza estesa % gas 1° livello		
Metano	2,05	incertezza estesa % gas 2° livello		
	0,31	errore relativo % della taratura 1° livello	≤ 10%	☑
	0,00	errore relativo % della taratura 2° livello	≤ 10%	☑
	2,83	Incertezza stimata u %		

TARATURA
Regolazione della misura

Gas campione	Counts/ppm FID	concentraz. gas campione	Valore misurato	Valore elettrico	Counts/ ppm	Errore Relativo	
Aria sintetica	<6000|	<0,1	0,0	4566	-	-	
Metano	| 160..320 |	0.1000	9556	2515456	262,8	#VALORE!	taratura 1° livello
Metano	| 160..320 |	99.6	99,8	30422	259,1	#VALORE!	taratura 2° livello

Esito della taratura:
Se Errore Relativo ≤ 10% = POSITIVO
Se Errore Relativo > 10% = NEGATIVO

☑ POSITIVO ☐ NEGATIVO

NOTE

Counts/ppm devono essere compresi tra: | 160..320 | con rivelatore FID e | 10..35 | con rivelatore PID
Incertezza stimata pari a un livello di confidenza del 68% (norma CEI 9)
Fattore di risposta applicato nelle misurazioni A = 1
L'analizzatore viene messo: in servizio per le misurazioni - fuori servizio per manutenzione
Taratura eseguita a due livelli di concentrazione

Il Tecnico | Data emissione

Nome Cognome: ANGELO GIANCIPPOLI | 23/0622

Firma:

ORION S.r.l.

A: Via A. Volta, 25/b - 35030 Veggiano (PD) - Italy
P: +39 049 9006.911 - F: +39 049 9006939
E: info@orion-srl.it - W: www.orion-srl.it

2 SCHEDE DI RILEVAZIONE EMISSIONI PER VALORI MAGGIORI O UGUALI ALLA SOGLIA DI ATTENZIONE

In questa sezione sono riportate tutte le Schede di rilevazione emissioni con concentrazione uguale o superiore al valore di Soglia di Attenzione - Leak Definition

Name	Description	Detection Equipment	Repair Def [ppmv]	Production Hours
CH4	Stream 01	TVA-FID	1.000	8.760

LEGGENDA:

SIGLA	STATO
C	COIBENTATO
NA	NON RAGGIUNGIBILE
NS	NON SICURO

Repair Number:

REPAIR ORDER

Drawing:	(01)_P12TV1722004.tpd	Description:	
Location:	TPW-01-VA-HV-19334 : 1005		
Class:	VALVOLA		
Sub Class:	VALVOLA MANUALE		
Asset Name:	**1005**	**Asset Tag:**	**1005**

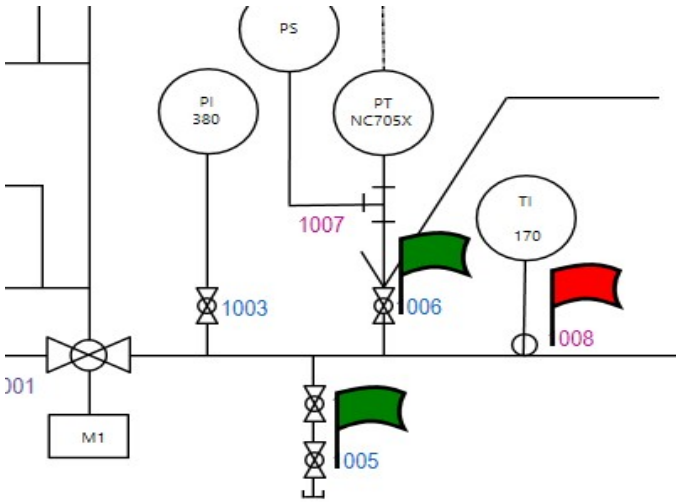

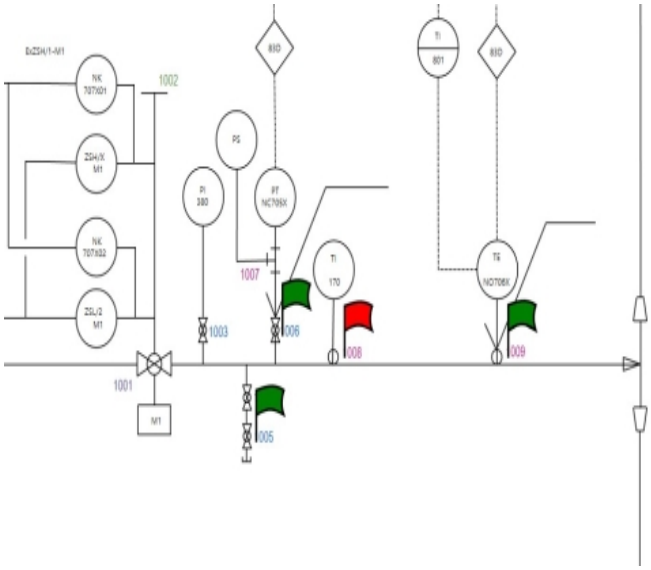

Measurement Data

Stream:	CH4	RF 500:	1	☑ Is Leak
Service:	G	RF 10000:	1	☐ Need Repair
Detect. Equipment:	TVA-FIDC / HGX-3	Leak Def.:	1000	
Calibration Medium:	METANO	Tag Def.:	100	
Calculation Method:	CORR	Repair Def.:	10000	

Source Name	PPM	Loss, kg/yr	Status	Date
1005-01-FL_IN-V	1300	15,23	Measured	2022-06-21
1005-02-FL_OUT-V	2	0,01	Measured	2022-06-21
1005-03-SV	3	0,01	Measured	2022-06-21
1005-04-BN	3	0,01	Measured	2022-06-21
1005-05-BF	4	0,01	Measured	2022-06-21

Maintenance Information

Flange Name	Flanges Qty	Flange Type	Dn	Pn	Gasket Type	InD	OuD	Bolts Qty	Bolt D	Bolt L	Torque, [N-m]	Bolt Material

Repair Number:

REPAIR ORDER

Drawing:	(01)_P12TV1722004.tpd	Description:	
Location:	TPW-01-VA-HV-19333 : 1006		
Class:	VALVOLA		
Sub Class:	VALVOLA MANUALE		
Asset Name:	**1006**	**Asset Tag:**	**1006**

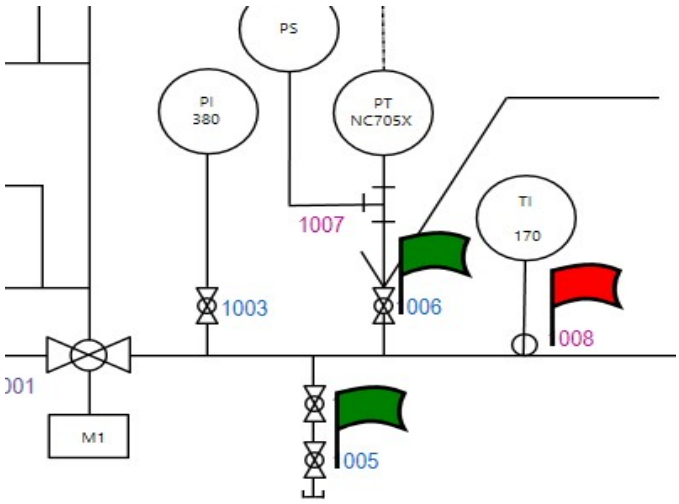

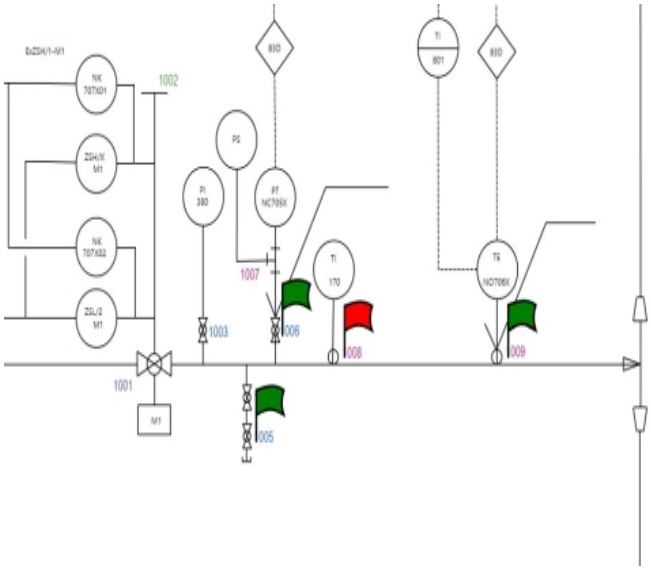

Measurement Data

Stream:	CH4	RF 500:	1	☑ Is Leak
Service:	G	RF 10000:	1	☐ Need Repair
Detect. Equipment:	TVA-FIDC / HGX-3	Leak Def.:	1000	
Calibration Medium:	METANO	Tag Def.:	100	
Calculation Method:	CORR	Repair Def.:	10000	

Source Name	PPM	Loss, kg/yr	Status	Date
1006-01-FL_IN-V	3000	31,92	Measured	2022-06-21
1006-02-FL_OUT-V	50	0,85	Measured	2022-06-21
1006-03-SV	370	2,86	Measured	2022-06-21

Maintenance Information

Flange Name	Flanges Qty	Flange Type	Dn	Pn	Gasket Type	InD	OuD	Bolts Qty	Bolt D	Bolt L	Torque, [N-m]	Bolt Material

Repair Number:

REPAIR ORDER

Drawing:	(01)_P12TV1722004.tpd	Description:	
Location:	TPW-01-CN-CN-03448 : 1009		
Class:	CONNETTORI		
Sub Class:	CONNETTORI		
Asset Name:	**1009**	**Asset Tag:**	**1009**

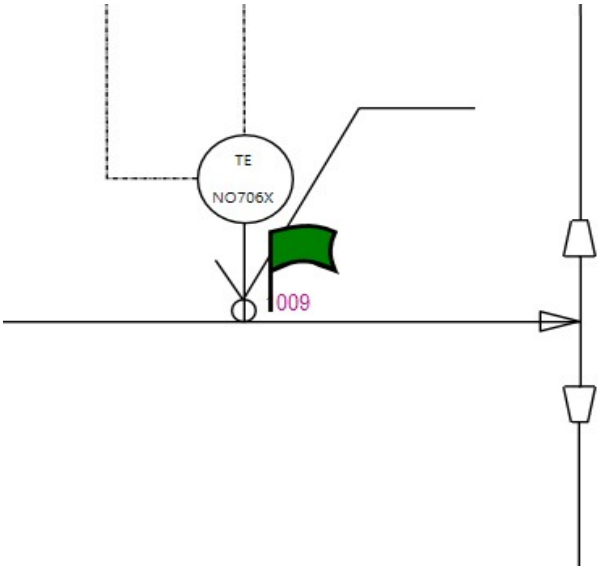

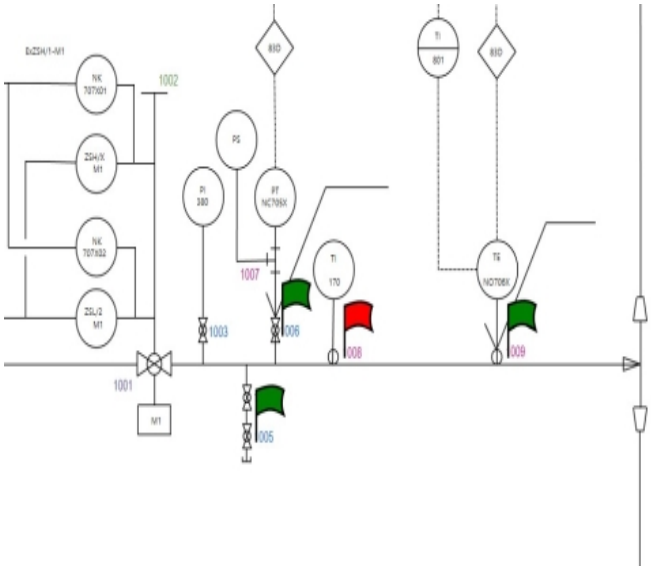

Measurement Data

Stream:	CH4	RF 500:	1	☑ Is Leak
Service:	G	RF 10000:	1	☐ Need Repair
Detect. Equipment:	TVA-FIDC / HGX-3	Leak Def.:	1000	
Calibration Medium:	METANO	Tag Def.:	100	
Calculation Method:	CORR	Repair Def.:	10000	

Source Name	PPM	Loss, kg/yr	Status	Date
1009-01-CN_IN	1100	13,14	Measured	2022-06-21
1009-02-CN_OUT1	7	0,01	Measured	2022-06-21
1009-03-CN_OUT2	3	0,01	Measured	2022-06-21

Maintenance Information

Flange Name	Flanges Qty	Flange Type	Dn	Pn	Gasket Type	InD	OuD	Bolts Qty	Bolt D	Bolt L	Torque, [N-m]	Bolt Material

Repair Number:

REPAIR ORDER

Drawing:	(01)_P12TV1722004.tpd	Description:	
Location:	TPW-01-VA-HV-19328 : 1025		
Class:	VALVOLA		
Sub Class:	VALVOLA MANUALE		
Asset Name:	**1025**	**Asset Tag:**	**1025**

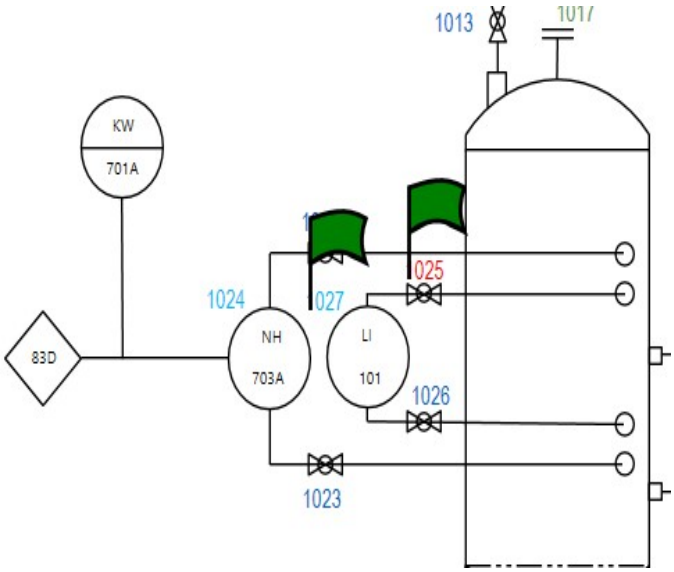

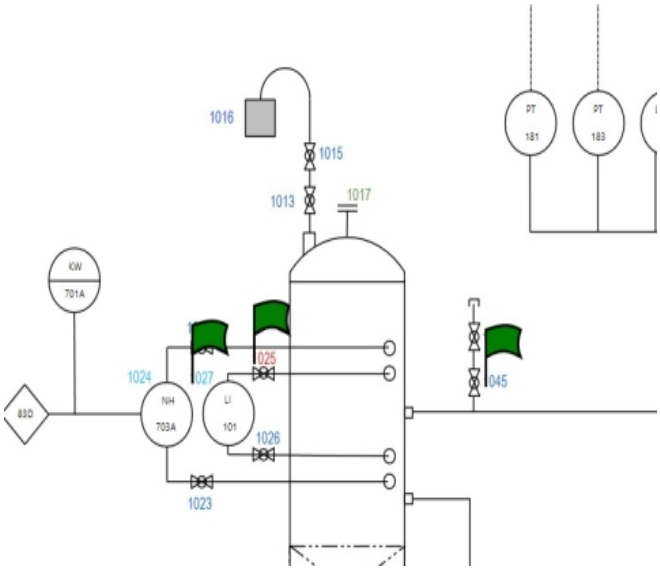

Measurement Data

Stream:	CH4	RF 500:	1	☑ Is Leak
Service:	G	RF 10000:	1	☐ Need Repair
Detect. Equipment:	TVA-FIDC / HGX-3	Leak Def.:	1000	
Calibration Medium:	METANO	Tag Def.:	100	
Calculation Method:	CORR	Repair Def.:	10000	

Source Name	PPM	Loss, kg/yr	Status	Date
1025-01-FL_IN-V	2	0,01	Measured	2022-06-21
1025-02-FL_OUT-V	60	1,00	Measured	2022-06-21
1025-03-SV	2000	12,48	Measured	2022-06-21
1025-04-BN	5	0,01	Measured	2022-06-21

Maintenance Information

Flange Name	Flanges Qty	Flange Type	Dn	Pn	Gasket Type	InD	OuD	Bolts Qty	Bolt D	Bolt L	Torque, [N-m]	Bolt Material

Repair Number:

REPAIR ORDER

Drawing:	(01)_P12TV1722004.tpd	Description:	
Location:	TPW-01-EQ-LI-00084 : 1027		
Class:	APPARECCHIATURE		
Sub Class:	LIVELLO		
Asset Name:	**1027**	**Asset Tag:**	**1027**

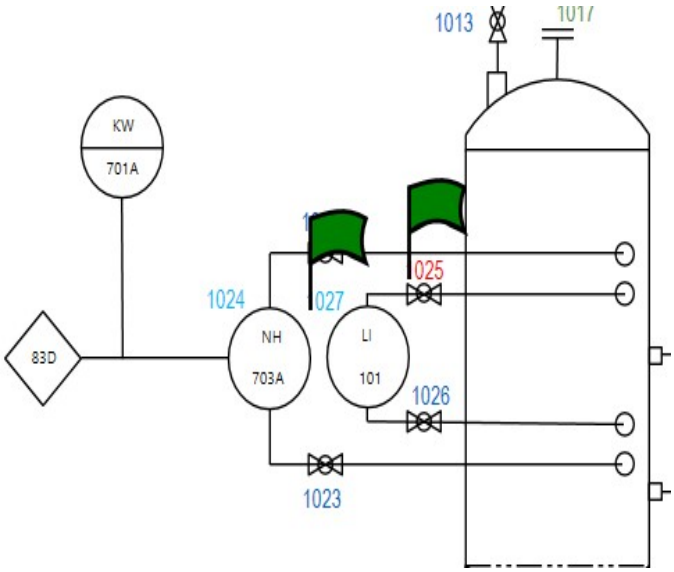

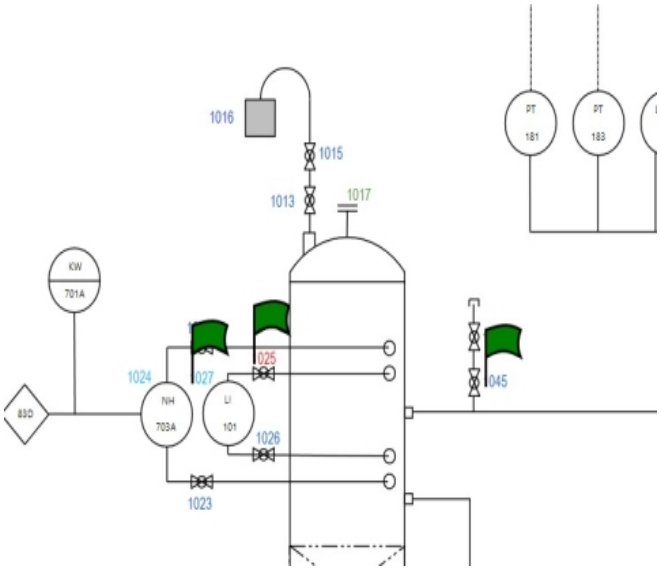

Measurement Data

Stream:	CH4	RF 500:	1	☑ Is Leak
Service:	G	RF 10000:	1	☐ Need Repair
Detect. Equipment:	TVA-FIDC / HGX-3	Leak Def.:	1000	
Calibration Medium:	METANO	Tag Def.:	100	
Calculation Method:	CORR	Repair Def.:	10000	

Source Name	PPM	Loss, kg/yr	Status	Date
1027-01-VA_IN-EQ	16	0,18	Measured	2022-06-21
1027-02-VA_OUT-EQ	100	0,91	Measured	2022-06-21
1027-03-EQ_SEAL	1600	18,30	Measured	2022-06-21
1027-04-EQ-PURGE	70	0,67	Measured	2022-06-21
1027-05-EQ-VENT	2	0,01	Measured	2022-06-21
1027-06-OTHERS-EQ	2	0,01	Measured	2022-06-21

Maintenance Information

Flange Name	Flanges Qty	Flange Type	Dn	Pn	Gasket Type	InD	OuD	Bolts Qty	Bolt D	Bolt L	Torque, [N-m]	Bolt Material

Repair Number:

REPAIR ORDER

Drawing:	(01)_P12TV1722004.tpd	Description:	
Location:	TPW-01-EQ-LI-00082 : 1036		
Class:	APPARECCHIATURE		
Sub Class:	LIVELLO		
Asset Name:	**1036**	**Asset Tag:**	**1036**

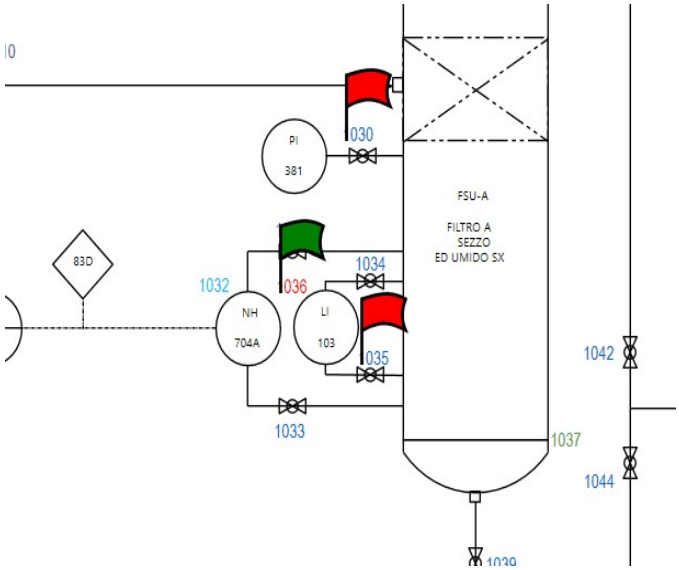

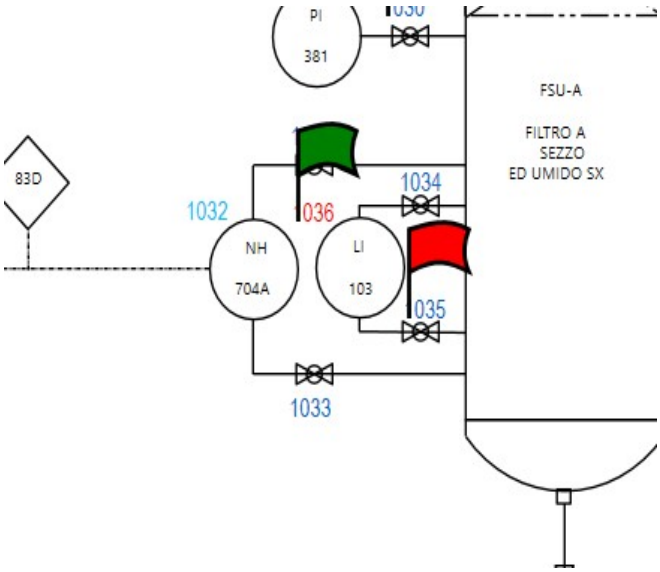

Measurement Data

Stream:	CH4	RF 500:	1	☑ Is Leak
Service:	G	RF 10000:	1	☐ Need Repair
Detect. Equipment:	TVA-FIDC / HGX-3	Leak Def.:	1000	
Calibration Medium:	METANO	Tag Def.:	100	
Calculation Method:	CORR	Repair Def.:	10000	

Source Name	PPM	Loss, kg/yr	Status	Date
1036-01-VA_IN-EQ	1000	6,81	Measured	2022-06-21
1036-02-VA_OUT-EQ	400	3,06	Measured	2022-06-21
1036-03-EQ_SEAL	2000	22,30	Measured	2022-06-21
1036-04-EQ-PURGE	30	0,32	Measured	2022-06-21

Maintenance Information

Flange Name	Flanges Qty	Flange Type	Dn	Pn	Gasket Type	InD	OuD	Bolts Qty	Bolt D	Bolt L	Torque, [N-m]	Bolt Material

Repair Number:

REPAIR ORDER

Drawing:	(01)_P12TV1722004.tpd	Description:	
Location:	TPW-01-VA-HV-19315 : 1045		
Class:	VALVOLA		
Sub Class:	VALVOLA MANUALE		
Asset Name:	**1045**	**Asset Tag:**	**1045**

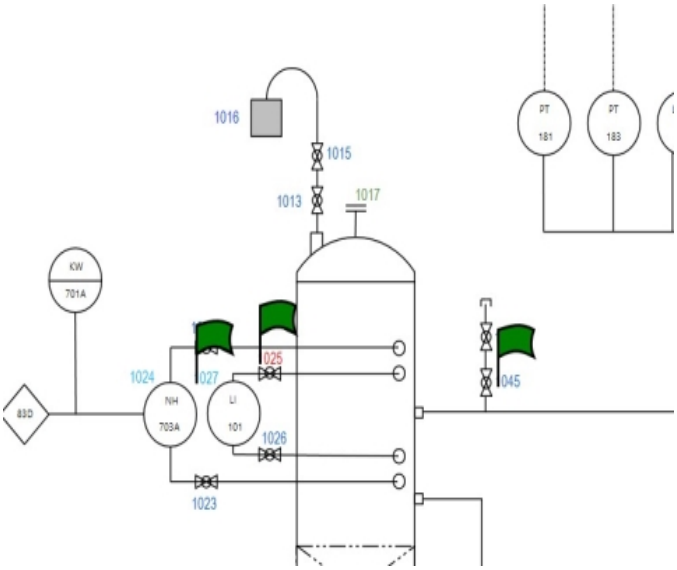

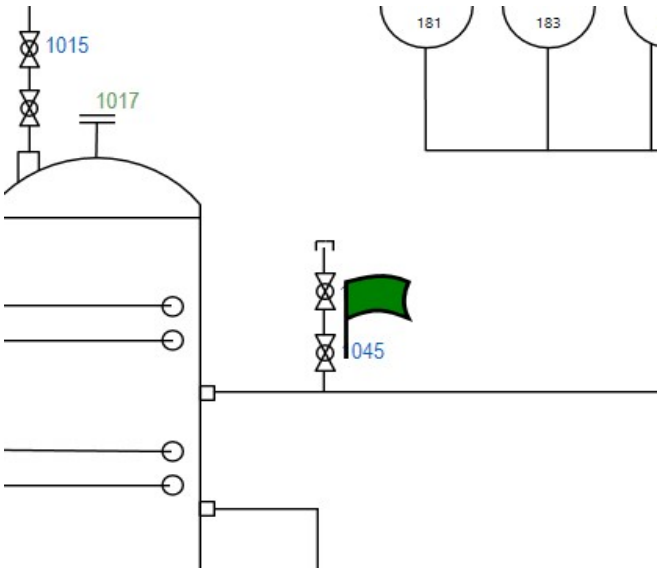

Measurement Data

Stream:	CH4	RF 500:	1	☑ Is Leak
Service:	G	RF 10000:	1	☐ Need Repair
Detect. Equipment:	TVA-FIDC / HGX-3	Leak Def.:	1000	
Calibration Medium:	METANO	Tag Def.:	100	
Calculation Method:	CORR	Repair Def.:	10000	

Source Name	PPM	Loss, kg/yr	Status	Date
1045-01-FL_IN-V	1000	12,07	Measured	2022-06-21
1045-02-FL_OUT-V	53	0,90	Measured	2022-06-21
1045-03-SV	62	0,60	Measured	2022-06-21
1045-04-BN	12	0,14	Measured	2022-06-21
1045-05-BF	1	0,01	Measured	2022-06-21

Maintenance Information

Flange Name	Flanges Qty	Flange Type	Dn	Pn	Gasket Type	InD	OuD	Bolts Qty	Bolt D	Bolt L	Torque, [N-m]	Bolt Material

Repair Number:

REPAIR ORDER

Drawing:	(01)_P12TV1722004.tpd	Description:	
Location:	TPW-01-EQ-LI-00081 : 1083		
Class:	APPARECCHIATURE		
Sub Class:	LIVELLO		
Asset Name:	**1083**	**Asset Tag:**	**1083**

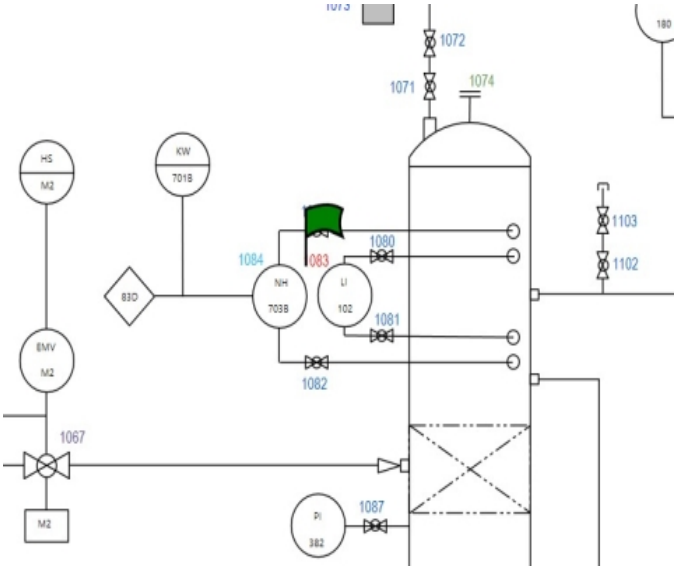

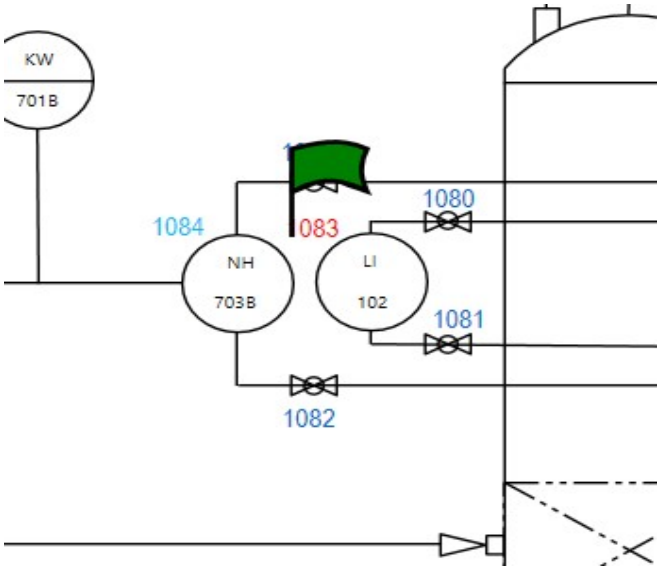

Measurement Data

Stream:	CH4	RF 500:	1	☑ Is Leak
Service:	G	RF 10000:	1	☐ Need Repair
Detect. Equipment:	TVA-FIDC / HGX-3	Leak Def.:	1000	
Calibration Medium:	METANO	Tag Def.:	100	
Calculation Method:	CORR	Repair Def.:	10000	

Source Name	PPM	Loss, kg/yr	Status	Date
1083-01-VA_IN-EQ	40	0,41	Measured	2022-06-21
1083-02-VA_OUT-EQ	10	0,12	Measured	2022-06-21
1083-03-EQ_SEAL	4000	41,17	Measured	2022-06-21

Maintenance Information

Flange Name	Flanges Qty	Flange Type	Dn	Pn	Gasket Type	InD	OuD	Bolts Qty	Bolt D	Bolt L	Torque, [N-m]	Bolt Material

Repair Number:

REPAIR ORDER

Drawing:	(01)_P12TV1722004.tpd	Description:	
Location:	TPW-01-VA-HV-19290 : 1096		
Class:	VALVOLA		
Sub Class:	VALVOLA MANUALE		
Asset Name:	**1096**	**Asset Tag:**	**1096**

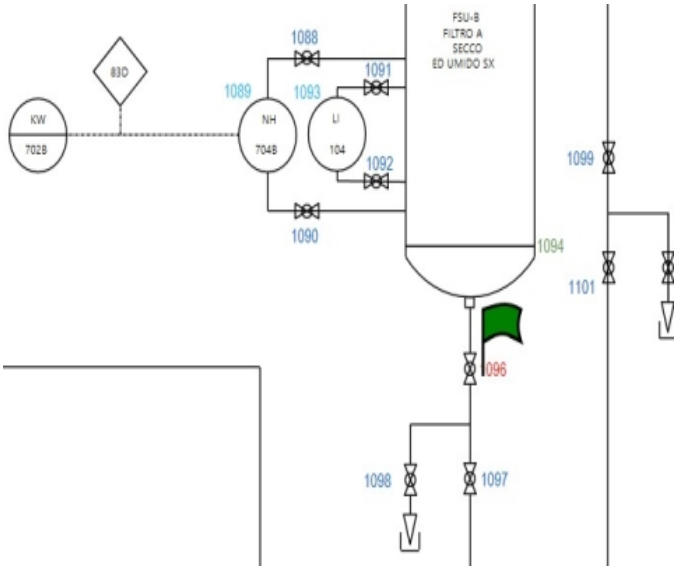

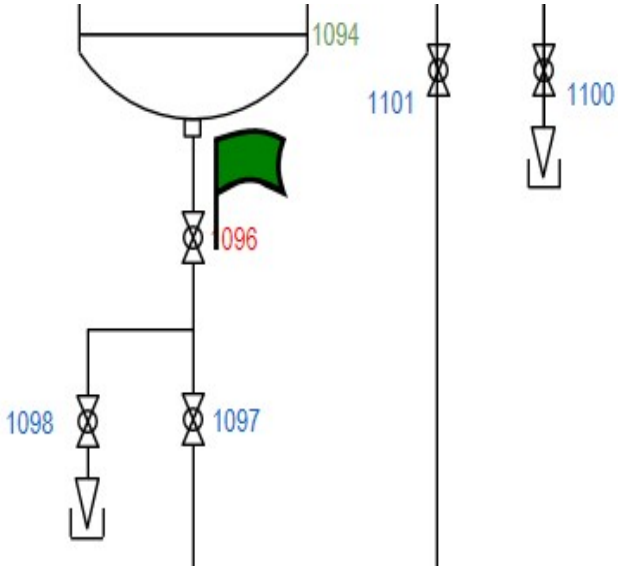

Measurement Data

Stream:	CH4	RF 500:	1	☑ Is Leak
Service:	G	RF 10000:	1	☐ Need Repair
Detect. Equipment:	TVA-FIDC / HGX-3	Leak Def.:	1000	
Calibration Medium:	METANO	Tag Def.:	100	
Calculation Method:	CORR	Repair Def.:	10000	

Source Name	PPM	Loss, kg/yr	Status	Date
1096-01-FL_IN-V	1200	14,19	Measured	2022-06-21
1096-02-FL_OUT-V	24	0,44	Measured	2022-06-21
1096-03-SV	21	0,23	Measured	2022-06-21
1096-04-BN	1	0,01	Measured	2022-06-21
1096-05-BF	1	0,01	Measured	2022-06-21

Maintenance Information

Flange Name	Flanges Qty	Flange Type	Dn	Pn	Gasket Type	InD	OuD	Bolts Qty	Bolt D	Bolt L	Torque, [N-m]	Bolt Material

Repair Number:

REPAIR ORDER

Drawing:	(02)_P12TV1722104.tpd	Description:	
Location:	TPW-02-VA-HV-19441 : 1141		
Class:	VALVOLA		
Sub Class:	VALVOLA MANUALE		
Asset Name:	**1141**	**Asset Tag:**	**1141**

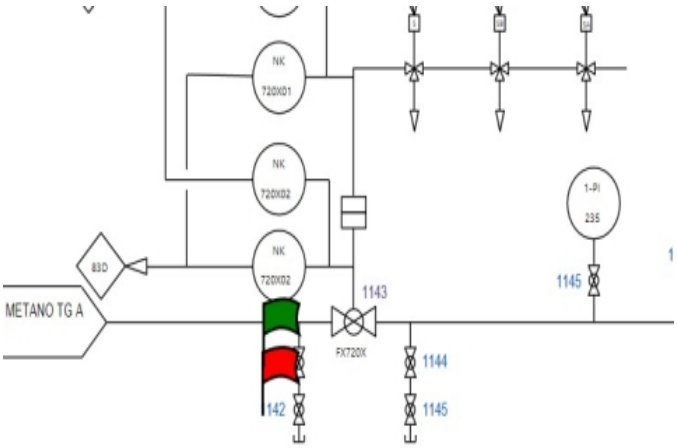

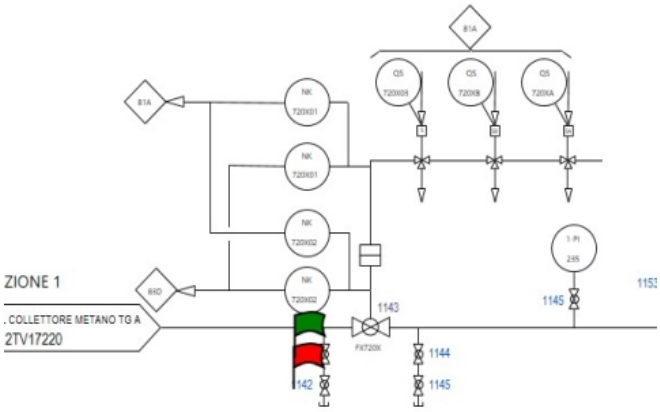

Measurement Data

Stream:	CH4	RF 500:	1
Service:	G	RF 10000:	1
Detect. Equipment:	TVA-FIDC / HGX-3	Leak Def.:	1000
Calibration Medium:	METANO	Tag Def.:	100
Calculation Method:	CORR	Repair Def.:	10000

☑ Is Leak
☐ Need Repair

Source Name	PPM	Loss, kg/yr	Status	Date
1141-01-FL_IN-V	1000	12,07	Measured	2022-06-21
1141-02-FL_OUT-V	1	0,01	Measured	2022-06-21
1141-03-SV	5	0,01	Measured	2022-06-21
1141-04-BN	2	0,01	Measured	2022-06-21
1141-05-BF	1	0,01	Measured	2022-06-21
1141-06-OTHERS-V	3	0,01	Measured	2022-06-21

Maintenance Information

Flange Name	Flanges Qty	Flange Type	Dn	Pn	Gasket Type	InD	OuD	Bolts Qty	Bolt D	Bolt L	Torque, [N-m]	Bolt Material

Repair Number:

REPAIR ORDER

Drawing:	(02)_P12TV1722104.tpd	Description:	
Location:	TPW-02-VA-PV-03106 : 1179		
Class:	VALVOLA		
Sub Class:	VALVOLA AUTOREGOLATRICE DI PRESSIONE		
Asset Name:	**1179**	**Asset Tag:**	**1179**

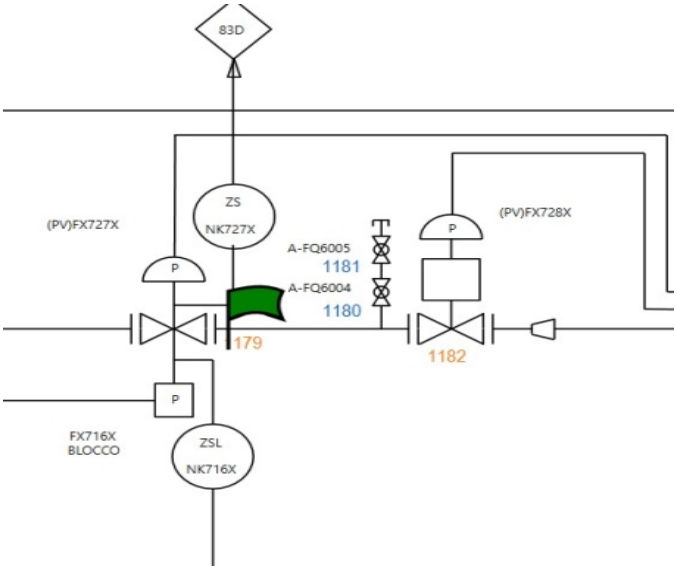

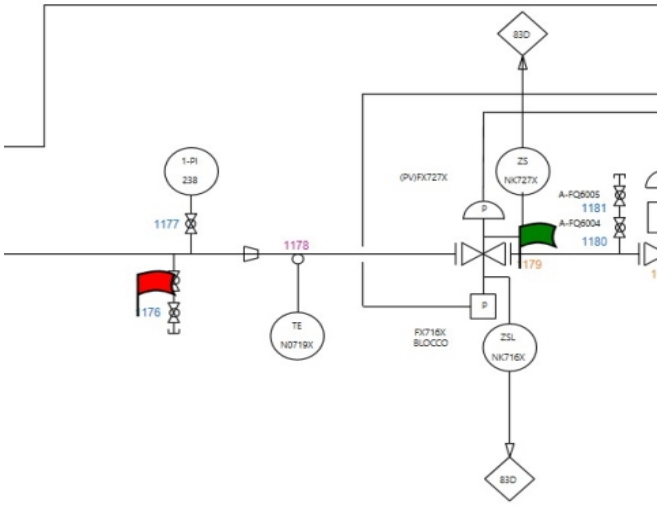

Measurement Data

Stream:	CH4	RF 500:	1	☑ Is Leak
Service:	G	RF 10000:	1	☐ Need Repair
Detect. Equipment:	TVA-FIDC / HGX-3	Leak Def.:	1000	
Calibration Medium:	METANO	Tag Def.:	100	
Calculation Method:	CORR	Repair Def.:	10000	

Source Name	PPM	Loss, kg/yr	Status	Date
1179-01-FL_IN-V	7	0,01	Measured	2022-06-21
1179-02-FL_OUT-V	6	0,01	Measured	2022-06-21
1179-03-SV	1700	10,83	Measured	2022-06-21
1179-04-BN	17	0,19	Measured	2022-06-21
1179-05-BF	400	5,37	Measured	2022-06-21
1179-06-OTHERS-V	6	0,01	Measured	2022-06-21

Maintenance Information

Flange Name	Flanges Qty	Flange Type	Dn	Pn	Gasket Type	InD	OuD	Bolts Qty	Bolt D	Bolt L	Torque, [N-m]	Bolt Material

Repair Number:

REPAIR ORDER

Drawing:	(02)_P12TV1722104.tpd	Description:	
Location:	TPW-02-CN-CN-03466 : 1244		
Class:	CONNETTORI		
Sub Class:	CONNETTORI		
Asset Name:	**1244**	**Asset Tag:**	**1244**

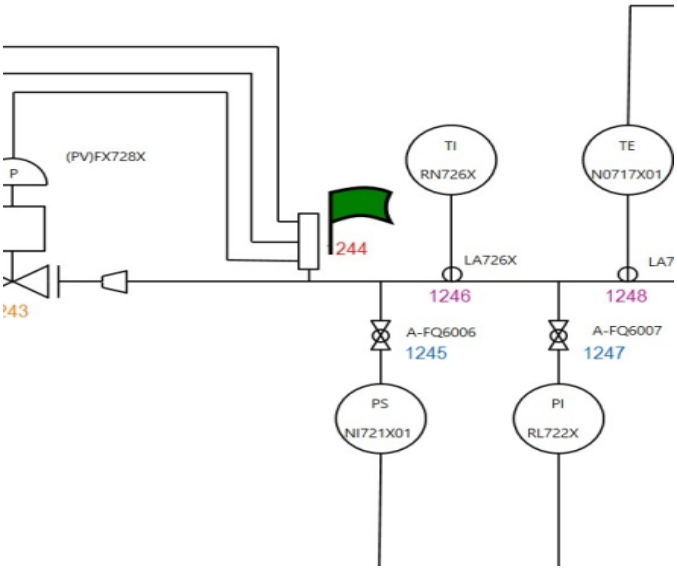

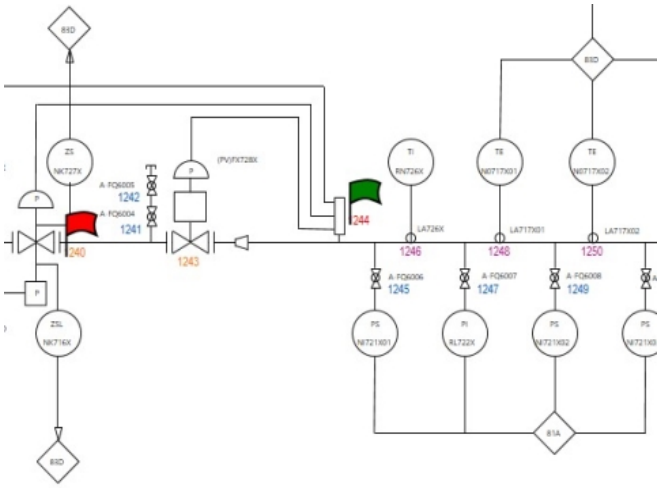

Measurement Data

Stream:	CH4	RF 500:	1	☑ Is Leak
Service:	G	RF 10000:	1	☐ Need Repair
Detect. Equipment:	TVA-FIDC / HGX-3	Leak Def.:	1000	
Calibration Medium:	METANO	Tag Def.:	100	
Calculation Method:	CORR	Repair Def.:	10000	

Source Name	PPM	Loss, kg/yr	Status	Date
1244-01-CN_IN	60	1,00	Measured	2022-06-22
1244-02-CN_OUT1	1500	17,28	Measured	2022-06-22
1244-03-CN_OUT2	70	1,15	Measured	2022-06-22
1244-04-OTHERS-C	200	2,91	Measured	2022-06-22

Maintenance Information

Flange Name	Flanges Qty	Flange Type	Dn	Pn	Gasket Type	InD	OuD	Bolts Qty	Bolt D	Bolt L	Torque, [N-m]	Bolt Material

Repair Number:

REPAIR ORDER

Drawing:	(02)_P12TV1722104.tpd	Description:	
Location:	TPW-02-VA-HV-19348 : 1299		
Class:	VALVOLA		
Sub Class:	VALVOLA MANUALE		
Asset Name:	**1299**	**Asset Tag:**	**1299**

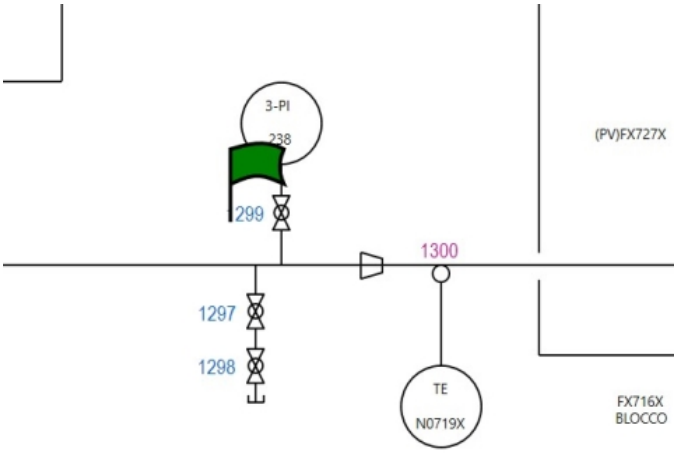

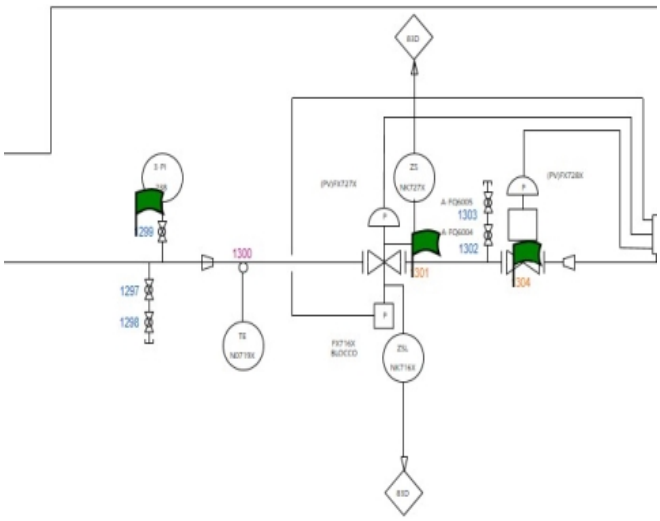

Measurement Data

Stream:	CH4	RF 500:	1	☑ Is Leak
Service:	G	RF 10000:	1	☐ Need Repair
Detect. Equipment:	TVA-FIDC / HGX-3	Leak Def.:	1000	
Calibration Medium:	METANO	Tag Def.:	100	
Calculation Method:	CORR	Repair Def.:	10000	

Source Name	PPM	Loss, kg/yr	Status	Date
1299-01-FL_IN-V	2	0,01	Measured	2022-06-22
1299-02-FL_OUT-V	1200	14,19	Measured	2022-06-22
1299-03-SV	2	0,01	Measured	2022-06-22
1299-04-BN	700	4,99	Measured	2022-06-22

Maintenance Information

Flange Name	Flanges Qty	Flange Type	Dn	Pn	Gasket Type	InD	OuD	Bolts Qty	Bolt D	Bolt L	Torque, [N-m]	Bolt Material

Repair Number:

REPAIR ORDER

Drawing:	(02)_P12TV1722104.tpd	Description:	
Location:	TPW-02-VA-PV-03102 : 1301		
Class:	VALVOLA		
Sub Class:	VALVOLA AUTOREGOLATRICE DI PRESSIONE		
Asset Name:	**1301**	**Asset Tag:**	**1301**

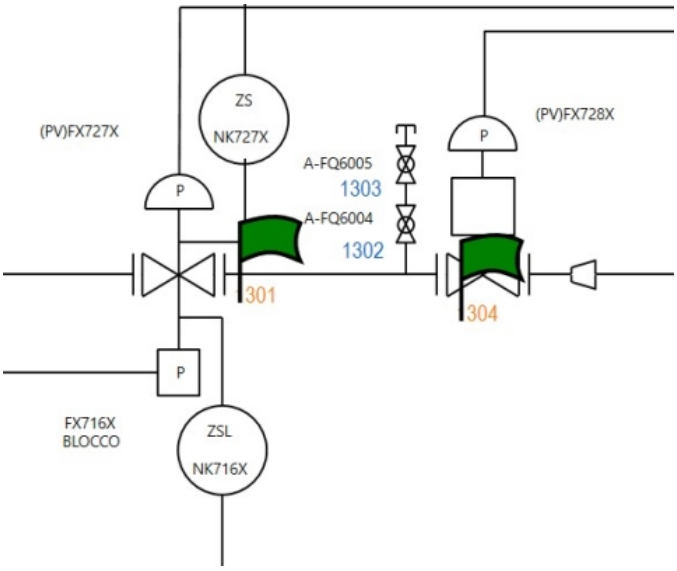

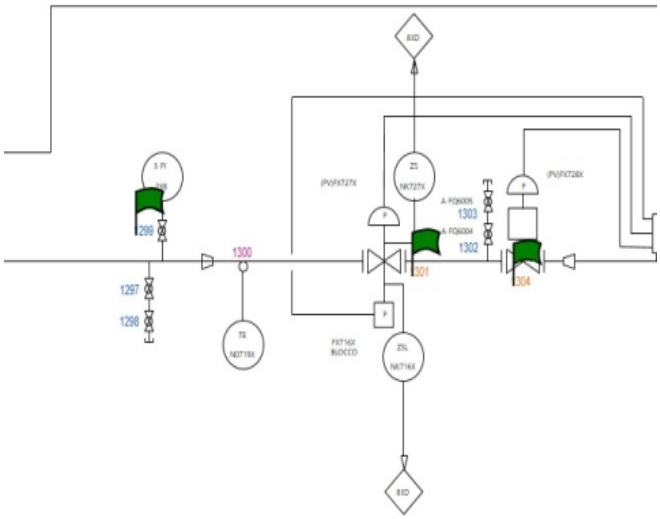

Measurement Data

Stream:	CH4	RF 500:	1	☑ Is Leak
Service:	G	RF 10000:	1	☐ Need Repair
Detect. Equipment:	TVA-FIDC / HGX-3	Leak Def.:	1000	
Calibration Medium:	METANO	Tag Def.:	100	
Calculation Method:	CORR	Repair Def.:	10000	

Source Name	PPM	Loss, kg/yr	Status	Date
1301-01-FL_IN-V	2	0,01	Measured	2022-06-22
1301-02-FL_OUT-V	1700	19,31	Measured	2022-06-22
1301-03-SV	7000	37,25	Measured	2022-06-22
1301-04-BN	20	0,22	Measured	2022-06-22
1301-05-BF	30	0,54	Measured	2022-06-22
1301-06-OTHERS-V	1	0,01	Measured	2022-06-22

Maintenance Information

Flange Name	Flanges Qty	Flange Type	Dn	Pn	Gasket Type	InD	OuD	Bolts Qty	Bolt D	Bolt L	Torque, [N-m]	Bolt Material

Repair Number:

REPAIR ORDER

Drawing:	(02)_P12TV1722104.tpd	Description:	
Location:	TPW-02-VA-PV-03101 : 1304		
Class:	VALVOLA		
Sub Class:	VALVOLA AUTOREGOLATRICE DI PRESSIONE		
Asset Name:	**1304**	**Asset Tag:**	**1304**

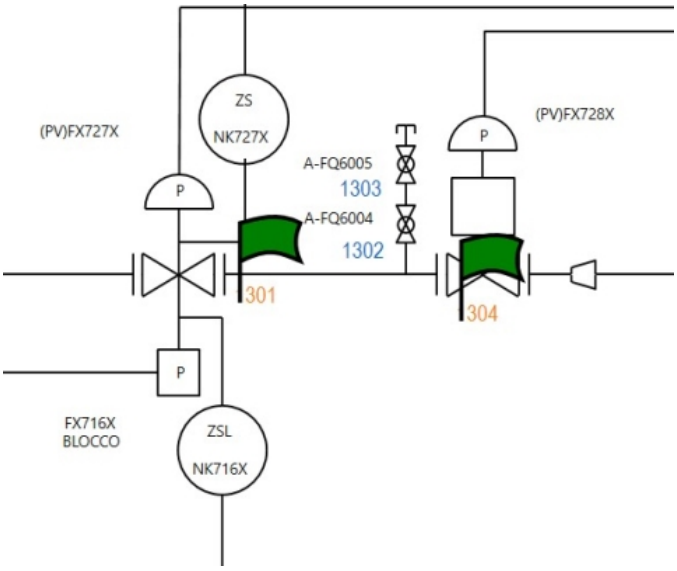

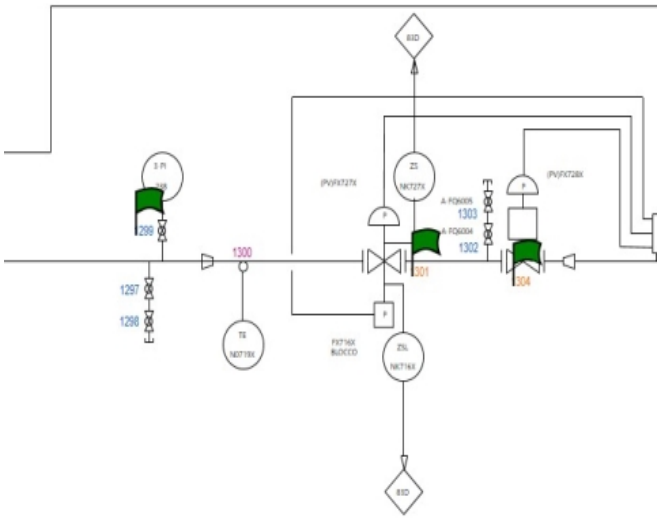

Measurement Data

Stream:	CH4	RF 500:	1	☑ Is Leak
Service:	G	RF 10000:	1	☐ Need Repair
Detect. Equipment:	TVA-FIDC / HGX-3	Leak Def.:	1000	
Calibration Medium:	METANO	Tag Def.:	100	
Calculation Method:	CORR	Repair Def.:	10000	

Source Name	PPM	Loss, kg/yr	Status	Date
1304-01-FL_IN-V	2	0,01	Measured	2022-06-22
1304-02-FL_OUT-V	7000	67,56	Measured	2022-06-22
1304-03-SV	40	0,41	Measured	2022-06-22

Maintenance Information

Flange Name	Flanges Qty	Flange Type	Dn	Pn	Gasket Type	InD	OuD	Bolts Qty	Bolt D	Bolt L	Torque, [N-m]	Bolt Material

Repair Number:

REPAIR ORDER

Drawing:	(02)_P12TV1722104.tpd	Description:	
Location:	TPW-02-VA-HV-19342 : 1312		
Class:	VALVOLA		
Sub Class:	VALVOLA MANUALE		
Asset Name:	**1312**	**Asset Tag:**	**1312**

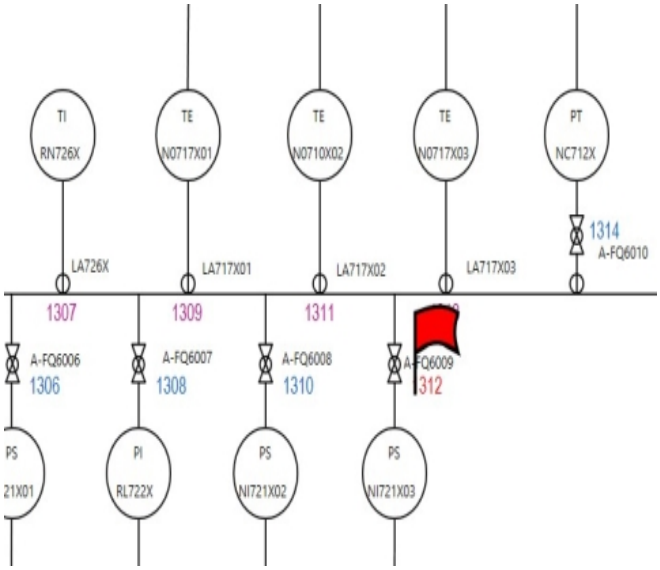

Measurement Data

Stream:	CH4	RF 500:	1	☑ Is Leak
Service:	G	RF 10000:	1	☑ Need Repair
Detect. Equipment:	TVA-FIDC / HGX-3	Leak Def.:	1000	
Calibration Medium:	METANO	Tag Def.:	100	
Calculation Method:	CORR	Repair Def.:	10000	

Source Name	PPM	Loss, kg/yr	Status	Date
1312-01-FL_IN-V	50000	1927,20	Measured	2022-06-22
1312-02-FL_OUT-V	250	3,54	Measured	2022-06-22
1312-03-SV	1300	8,57	Measured	2022-06-22

Maintenance Information

Flange Name	Flanges Qty	Flange Type	Dn	Pn	Gasket Type	InD	OuD	Bolts Qty	Bolt D	Bolt L	Torque, [N-m]	Bolt Material

Repair Number:

REPAIR ORDER

Drawing:	(03)_P12TV02476.tpd	Description:	
Location:	TPW-03-FL-FL-12269 : 1334		
Class:	FLANGE		
Sub Class:	FLANGE		
Asset Name:	**1334**	**Asset Tag:**	**1334**

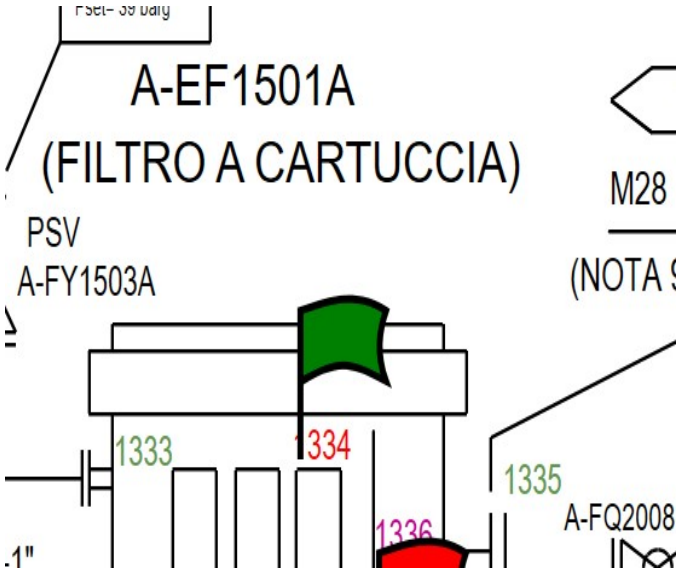

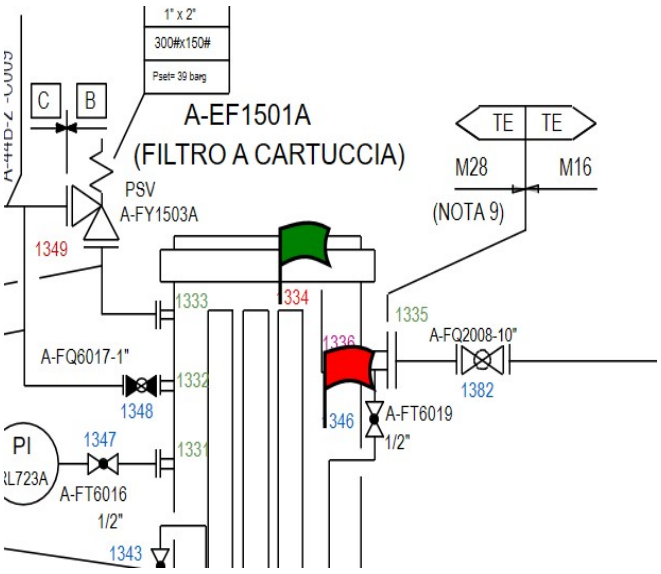

Measurement Data

Stream:	CH4	RF 500:	1	☑ Is Leak
Service:	G	RF 10000:	1	☐ Need Repair
Detect. Equipment:	TVA-FIDC / HGX-3	Leak Def.:	1000	
Calibration Medium:	METANO	Tag Def.:	100	
Calculation Method:	CORR	Repair Def.:	10000	

Source Name	PPM	Loss, kg/yr	Status	Date
1334-01-FL_IN	1500	17,28	Measured	2022-06-23
1334-02-FL_OUT	51	0,87	Measured	2022-06-23
1334-03-FL_SEAL	34	0,61	Measured	2022-06-23

Maintenance Information

Flange Name	Flanges Qty	Flange Type	Dn	Pn	Gasket Type	InD	OuD	Bolts Qty	Bolt D	Bolt L	Torque, [N-m]	Bolt Material

Repair Number:

REPAIR ORDER

Drawing:	(03)_P12TV02476.tpd	Description:	
Location:	TPW-03-VA-HV-19778 : 1362		
Class:	VALVOLA		
Sub Class:	VALVOLA MANUALE		
Asset Name:	**1362**	**Asset Tag:**	**1362**

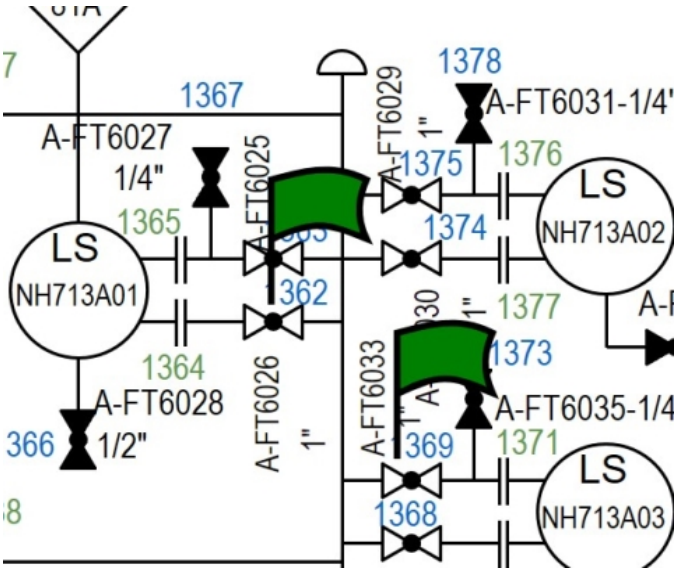

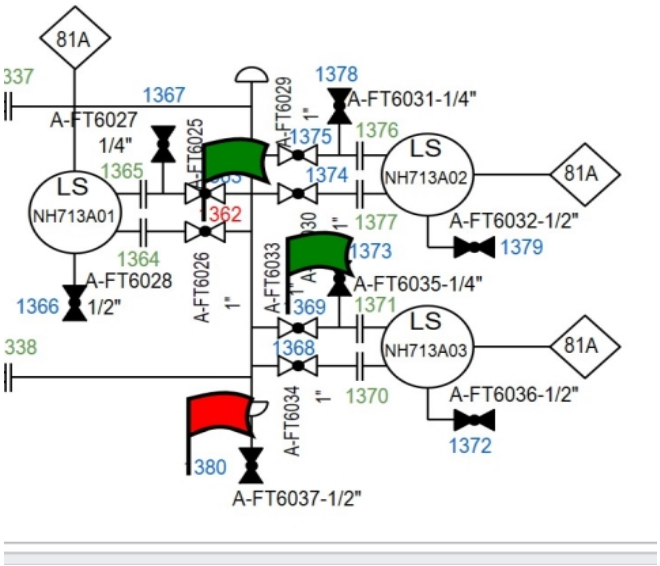

Measurement Data

Stream:	CH4	RF 500:	1	☑ Is Leak
Service:	G	RF 10000:	1	☐ Need Repair
Detect. Equipment:	TVA-FIDC / HGX-3	Leak Def.:	1000	
Calibration Medium:	METANO	Tag Def.:	100	
Calculation Method:	CORR	Repair Def.:	10000	

Source Name	PPM	Loss, kg/yr	Status	Date
1362-01-FL_IN-V	44	0,76	Measured	2022-06-23
1362-02-FL_OUT-V	1500	17,28	Measured	2022-06-23
1362-03-SV	22	0,24	Measured	2022-06-23
1362-04-BN	2	0,01	Measured	2022-06-23
1362-05-BF	3	0,01	Measured	2022-06-23

Maintenance Information

Flange Name	Flanges Qty	Flange Type	Dn	Pn	Gasket Type	InD	OuD	Bolts Qty	Bolt D	Bolt L	Torque, [N-m]	Bolt Material

Repair Number:

REPAIR ORDER

Drawing:	(03)_P12TV02476.tpd	Description:	
Location:	TPW-03-VA-HV-19773 : 1369		
Class:	VALVOLA		
Sub Class:	VALVOLA MANUALE		
Asset Name:	**1369**	**Asset Tag:**	**1369**

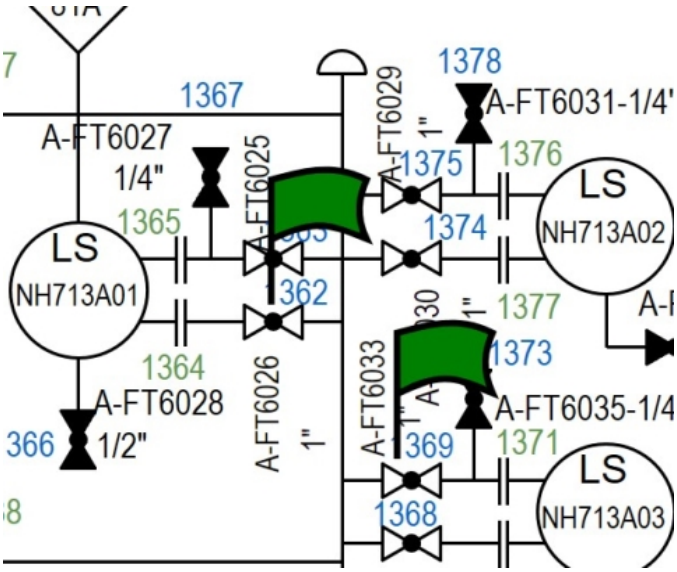

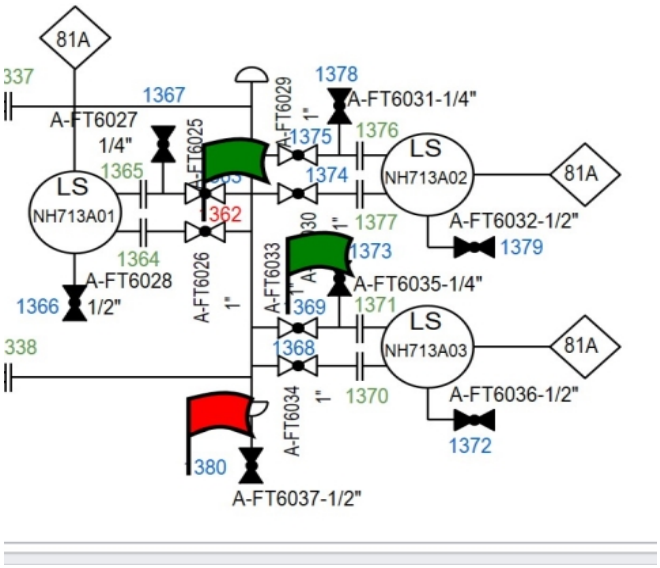

Measurement Data

Stream:	CH4	RF 500:	1	☑ Is Leak
Service:	G	RF 10000:	1	☐ Need Repair
Detect. Equipment:	TVA-FIDC / HGX-3	Leak Def.:	1000	
Calibration Medium:	METANO	Tag Def.:	100	
Calculation Method:	CORR	Repair Def.:	10000	

Source Name	PPM	Loss, kg/yr	Status	Date
1369-01-FL_IN-V	20	0,38	Measured	2022-06-23
1369-02-FL_OUT-V	2400	26,20	Measured	2022-06-23
1369-03-SV	2	0,01	Measured	2022-06-23
1369-04-BN	2	0,01	Measured	2022-06-23
1369-05-BF	4	0,01	Measured	2022-06-23

Maintenance Information

Flange Name	Flanges Qty	Flange Type	Dn	Pn	Gasket Type	InD	OuD	Bolts Qty	Bolt D	Bolt L	Torque, [N-m]	Bolt Material

Repair Number:

REPAIR ORDER

Drawing:	(03)_P12TV02476.tpd	Description:	
Location:	TPW-03-CN-CN-03503 : 1398		
Class:	CONNETTORI		
Sub Class:	CONNETTORI		
Asset Name:	**1398**	**Asset Tag:**	**1398**

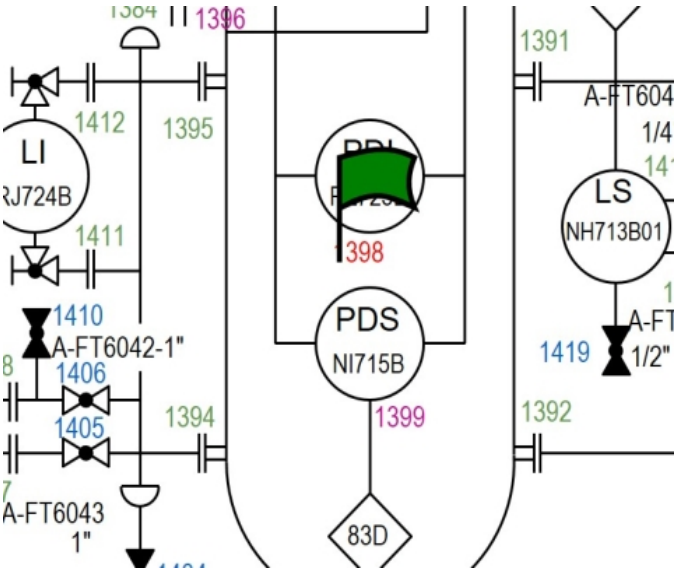

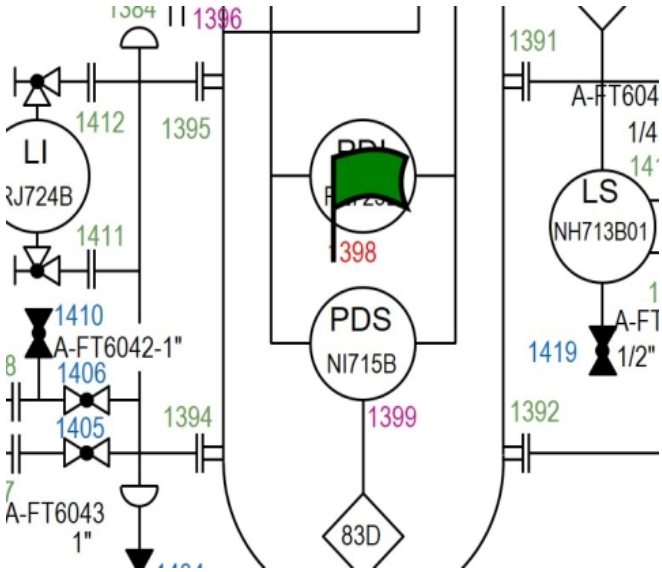

Measurement Data

Stream:	CH4	RF 500:	1	☑ Is Leak
Service:	G	RF 10000:	1	☐ Need Repair
Detect. Equipment:	TVA-FIDC / HGX-3	Leak Def.:	1000	
Calibration Medium:	METANO	Tag Def.:	100	
Calculation Method:	CORR	Repair Def.:	10000	

Source Name	PPM	Loss, kg/yr	Status	Date
1398-01-CN_IN	1400	16,26	Measured	2022-06-23
1398-02-CN_OUT1	2500	27,16	Measured	2022-06-23
1398-03-CN_OUT2	5000	50,16	Measured	2022-06-23
1398-04-OTHERS-C	560	7,23	Measured	2022-06-23

Maintenance Information

Flange Name	Flanges Qty	Flange Type	Dn	Pn	Gasket Type	InD	OuD	Bolts Qty	Bolt D	Bolt L	Torque, [N-m]	Bolt Material

Repair Number:

REPAIR ORDER

Drawing:	(03)_P12TV02476.tpd	Description:	
Location:	TPW-03-VA-HV-19755 : 1409		
Class:	VALVOLA		
Sub Class:	VALVOLA MANUALE		
Asset Name:	**1409**	**Asset Tag:**	**1409**

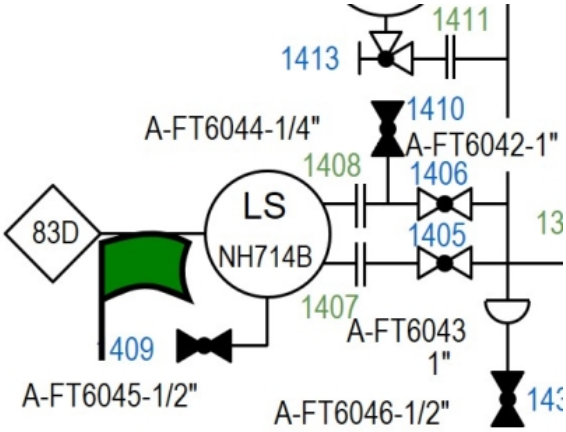

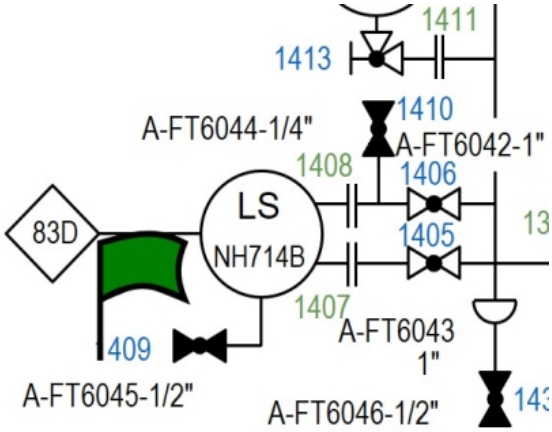

Measurement Data

Stream:	CH4	RF 500:	1	☑ Is Leak
Service:	G	RF 10000:	1	☐ Need Repair
Detect. Equipment:	TVA-FIDC / HGX-3	Leak Def.:	1000	
Calibration Medium:	METANO	Tag Def.:	100	
Calculation Method:	CORR	Repair Def.:	10000	

Source Name	PPM	Loss, kg/yr	Status	Date
1409-01-FL_IN-V	41	0,71	Measured	2022-06-23
1409-02-FL_OUT-V	33	0,59	Measured	2022-06-23
1409-03-SV	3000	17,78	Measured	2022-06-23
1409-04-BN	6	0,01	Measured	2022-06-23
1409-05-BF	3	0,01	Measured	2022-06-23

Maintenance Information

Flange Name	Flanges Qty	Flange Type	Dn	Pn	Gasket Type	InD	OuD	Bolts Qty	Bolt D	Bolt L	Torque, [N-m]	Bolt Material

Repair Number:

REPAIR ORDER

Drawing:	(03)_P12TV02476.tpd	Description:	
Location:	TPW-03-VA-HV-19745 : 1425		
Class:	VALVOLA		
Sub Class:	VALVOLA MANUALE		
Asset Name:	**1425**	**Asset Tag:**	**1425**

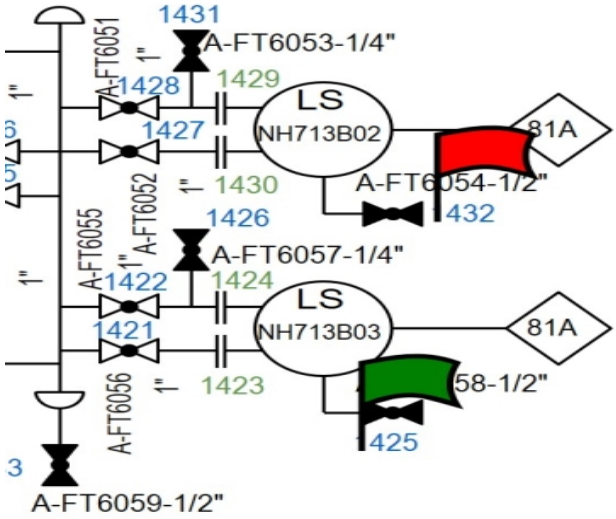

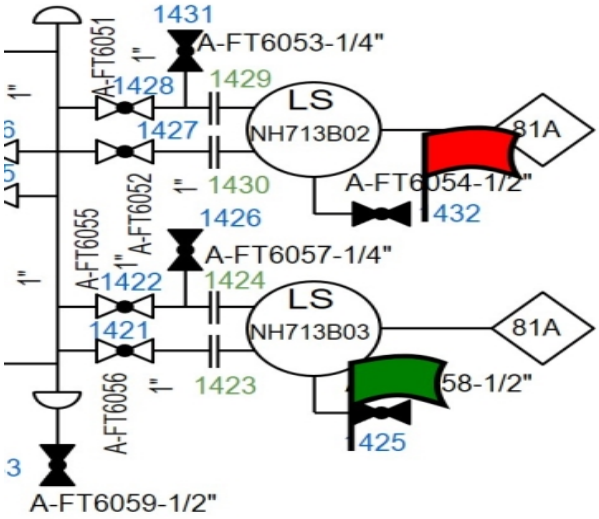

Measurement Data

Stream:	CH4	RF 500:	1	☑ Is Leak
Service:	G	RF 10000:	1	☐ Need Repair
Detect. Equipment:	TVA-FIDC / HGX-3	Leak Def.:	1000	
Calibration Medium:	METANO	Tag Def.:	100	
Calculation Method:	CORR	Repair Def.:	10000	

Source Name	PPM	Loss, kg/yr	Status	Date
1425-01-FL_IN-V	27	0,49	Measured	2022-06-23
1425-02-FL_OUT-V	1700	19,31	Measured	2022-06-23
1425-03-SV	20	0,22	Measured	2022-06-23
1425-04-BN	4	0,01	Measured	2022-06-23
1425-05-BF	1	0,01	Measured	2022-06-23

Maintenance Information

Flange Name	Flanges Qty	Flange Type	Dn	Pn	Gasket Type	InD	OuD	Bolts Qty	Bolt D	Bolt L	Torque, [N-m]	Bolt Material

Repair Number:

REPAIR ORDER

Drawing:	(03)_P12TV02476.tpd	Description:	
Location:	TPW-03-FL-FL-12226 : 1443		
Class:	FLANGE		
Sub Class:	FLANGE		
Asset Name:	**1443**	**Asset Tag:**	**1443**

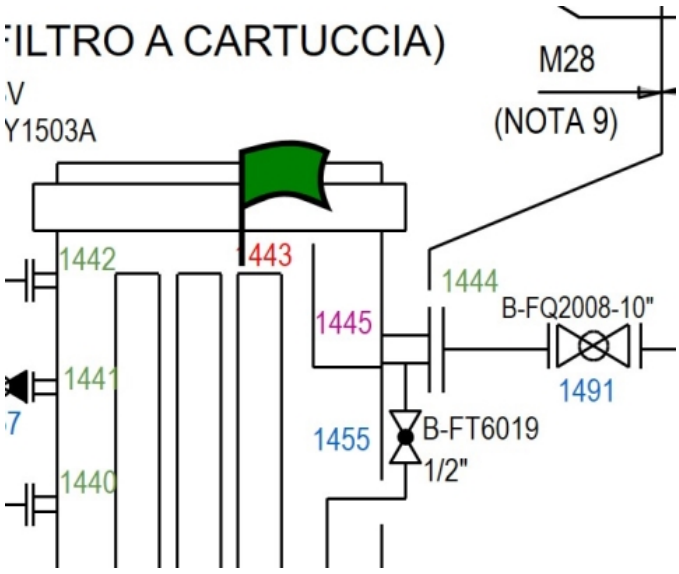

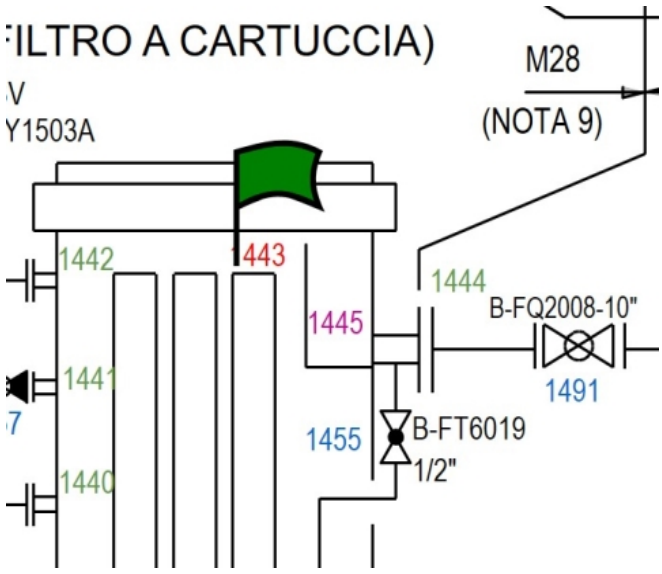

Measurement Data

Stream:	CH4	RF 500:	1	☑ Is Leak
Service:	G	RF 10000:	1	☐ Need Repair
Detect. Equipment:	TVA-FIDC / HGX-3	Leak Def.:	1000	
Calibration Medium:	METANO	Tag Def.:	100	
Calculation Method:	CORR	Repair Def.:	10000	

Source Name	PPM	Loss, kg/yr	Status	Date
1443-01-FL_IN	24	0,44	Measured	2022-06-22
1443-02-FL_OUT	21	0,40	Measured	2022-06-22
1443-03-FL_SEAL	1200	14,19	Measured	2022-06-22

Maintenance Information

Flange Name	Flanges Qty	Flange Type	Dn	Pn	Gasket Type	InD	OuD	Bolts Qty	Bolt D	Bolt L	Torque, [N-m]	Bolt Material

Repair Number:

REPAIR ORDER

Drawing:	(03)_P12TV02476.tpd	Description:	
Location:	TPW-03-VA-HV-19733 : 1456		
Class:	VALVOLA		
Sub Class:	VALVOLA MANUALE		
Asset Name:	**1456**	**Asset Tag:**	**1456**

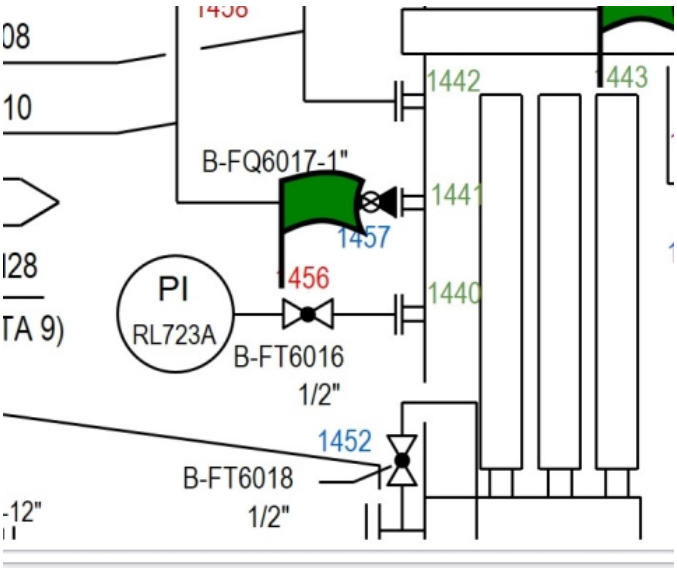

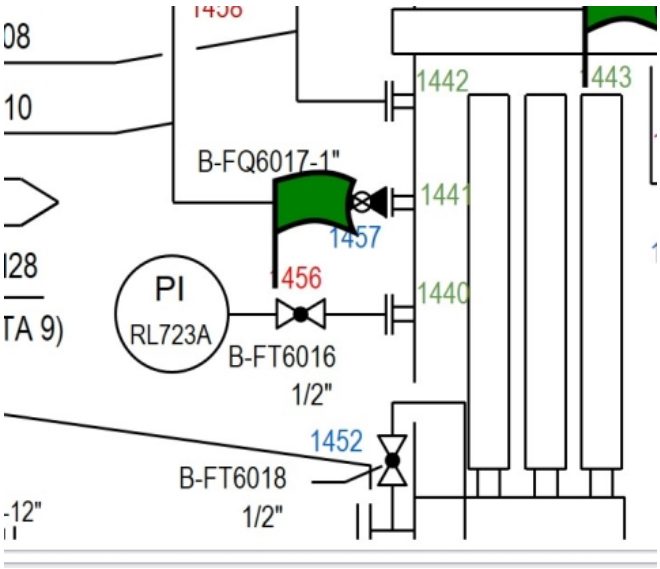

Measurement Data

Stream:	CH4	RF 500:	1	☑ Is Leak
Service:	G	RF 10000:	1	☐ Need Repair
Detect. Equipment:	TVA-FIDC / HGX-3	Leak Def.:	1000	
Calibration Medium:	METANO	Tag Def.:	100	
Calculation Method:	CORR	Repair Def.:	10000	

Source Name	PPM	Loss, kg/yr	Status	Date
1456-01-FL_IN-V	2700	29,08	Measured	2022-06-22
1456-02-FL_OUT-V	5	0,01	Measured	2022-06-22
1456-03-SV	6	0,01	Measured	2022-06-22
1456-04-BN	7	0,01	Measured	2022-06-22
1456-05-BF	5	0,01	Measured	2022-06-22

Maintenance Information

Flange Name	Flanges Qty	Flange Type	Dn	Pn	Gasket Type	InD	OuD	Bolts Qty	Bolt D	Bolt L	Torque, [N-m]	Bolt Material

Repair Number:

REPAIR ORDER

Drawing:	(03)_P12TV02476.tpd	Description:	
Location:	TPW-03-VA-HV-19722 : 1472		
Class:	VALVOLA		
Sub Class:	VALVOLA MANUALE		
Asset Name:	**1472**	**Asset Tag:**	**1472**

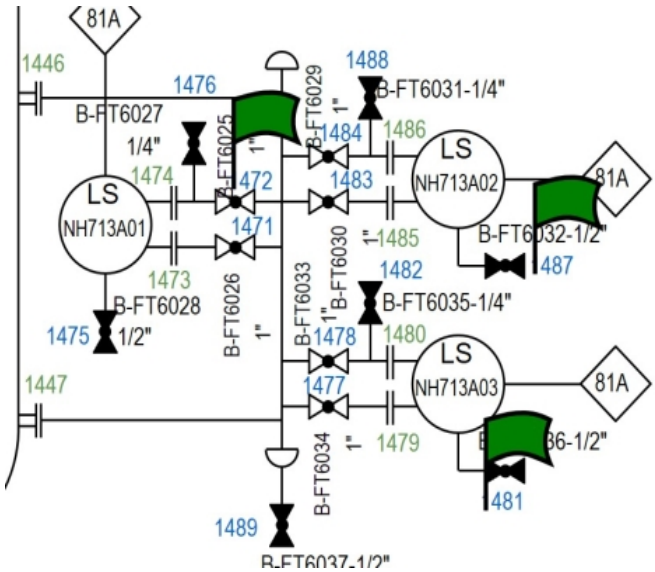

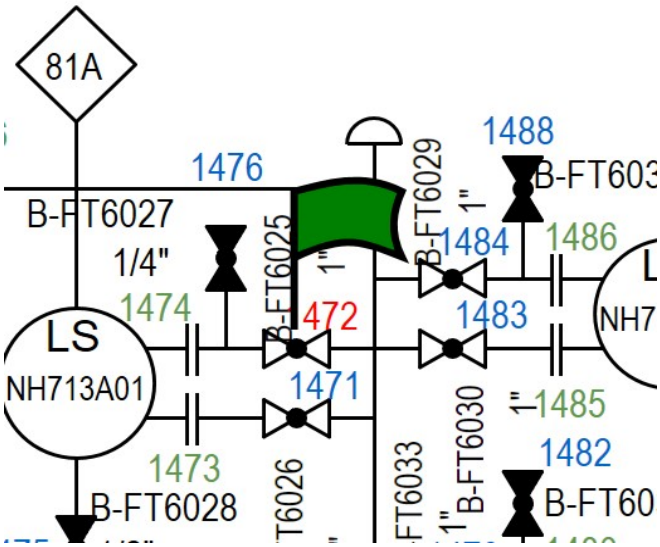

Measurement Data

Stream:	CH4	RF 500:	1	☑ Is Leak
Service:	G	RF 10000:	1	☐ Need Repair
Detect. Equipment:	TVA-FIDC / HGX-3	Leak Def.:	1000	
Calibration Medium:	METANO	Tag Def.:	100	
Calculation Method:	CORR	Repair Def.:	10000	

Source Name	PPM	Loss, kg/yr	Status	Date
1472-01-FL_IN-V	16	0,31	Measured	2022-06-22
1472-02-FL_OUT-V	1300	15,23	Measured	2022-06-22
1472-03-SV	11	0,13	Measured	2022-06-22
1472-04-BN	5	0,01	Measured	2022-06-22
1472-05-BF	7	0,01	Measured	2022-06-22

Maintenance Information

Flange Name	Flanges Qty	Flange Type	Dn	Pn	Gasket Type	InD	OuD	Bolts Qty	Bolt D	Bolt L	Torque, [N-m]	Bolt Material

Repair Number:

REPAIR ORDER

Drawing:	(03)_P12TV02476.tpd	Description:	
Location:	TPW-03-VA-HV-19717 : 1481		
Class:	VALVOLA		
Sub Class:	VALVOLA MANUALE		
Asset Name:	**1481**	**Asset Tag:**	**1481**

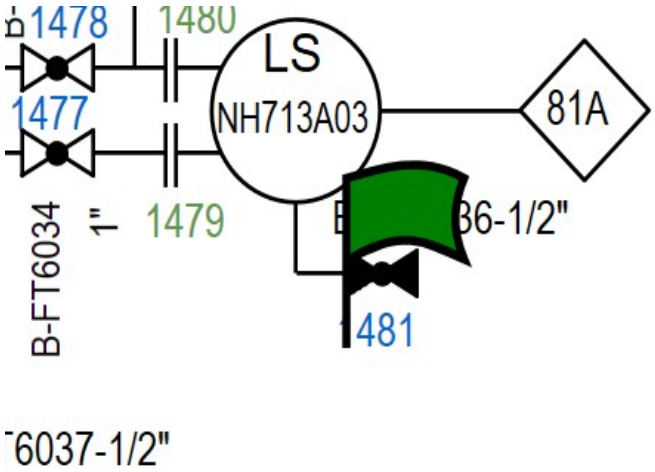

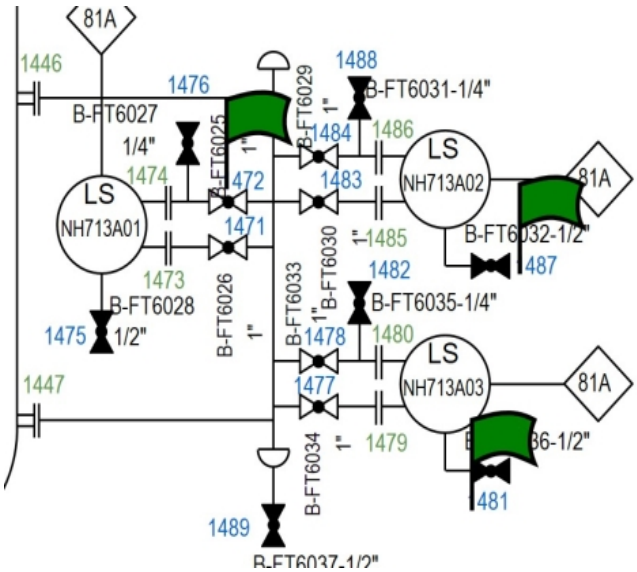

Measurement Data

Stream:	CH4	RF 500:	1
Service:	G	RF 10000:	1
Detect. Equipment:	TVA-FIDC / HGX-3	Leak Def.:	1000
Calibration Medium:	METANO	Tag Def.:	100
Calculation Method:	CORR	Repair Def.:	10000

☑ Is Leak
☐ Need Repair

Source Name	PPM	Loss, kg/yr	Status	Date
1481-01-FL_IN-V	1300	15,23	Measured	2022-06-22
1481-02-FL_OUT-V	100	1,57	Measured	2022-06-22
1481-03-SV	30	0,32	Measured	2022-06-22
1481-04-BN	6	0,01	Measured	2022-06-22
1481-05-BF	6	0,01	Measured	2022-06-22

Maintenance Information

Flange Name	Flanges Qty	Flange Type	Dn	Pn	Gasket Type	InD	OuD	Bolts Qty	Bolt D	Bolt L	Torque, [N-m]	Bolt Material

Repair Number:

REPAIR ORDER

Drawing:	(03)_P12TV02476.tpd	Description:	
Location:	TPW-03-VA-HV-19713 : 1487		
Class:	VALVOLA		
Sub Class:	VALVOLA MANUALE		
Asset Name:	**1487**	**Asset Tag:**	**1487**

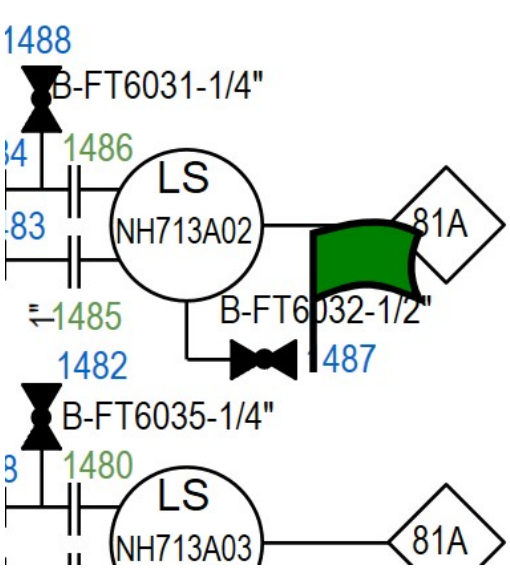

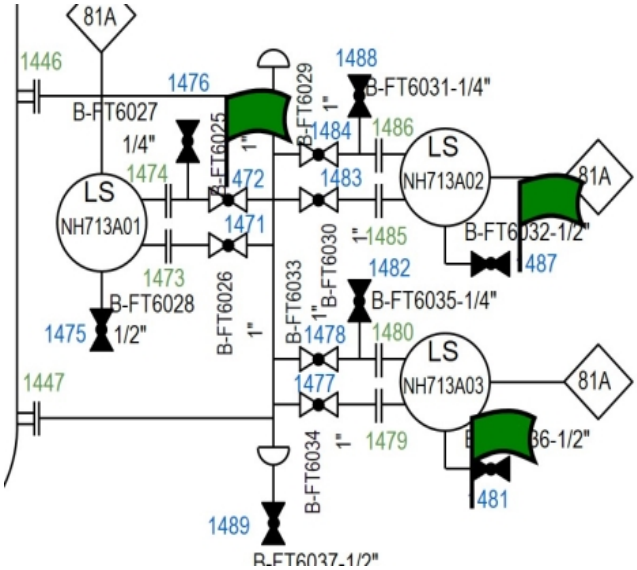

Measurement Data

Stream:	CH4	RF 500:	1
Service:	G	RF 10000:	1
Detect. Equipment:	TVA-FIDC / HGX-3	Leak Def.:	1000
Calibration Medium:	METANO	Tag Def.:	100
Calculation Method:	CORR	Repair Def.:	10000

☑ Is Leak
☐ Need Repair

Source Name	PPM	Loss, kg/yr	Status	Date
1487-01-FL_IN-V	300	4,16	Measured	2022-06-22
1487-02-FL_OUT-V	1200	14,19	Measured	2022-06-22
1487-03-SV	80	0,75	Measured	2022-06-22
1487-04-BN	3	0,01	Measured	2022-06-22
1487-05-BF	4	0,01	Measured	2022-06-22

Maintenance Information

Flange Name	Flanges Qty	Flange Type	Dn	Pn	Gasket Type	InD	OuD	Bolts Qty	Bolt D	Bolt L	Torque, [N-m]	Bolt Material

Repair Number:

REPAIR ORDER

Drawing:	(03)_P12TV02476.tpd	Description:	
Location:	TPW-03-FL-FL-12205 : 1497		
Class:	FLANGE		
Sub Class:	FLANGE		
Asset Name:	**1497**	**Asset Tag:**	**1497**

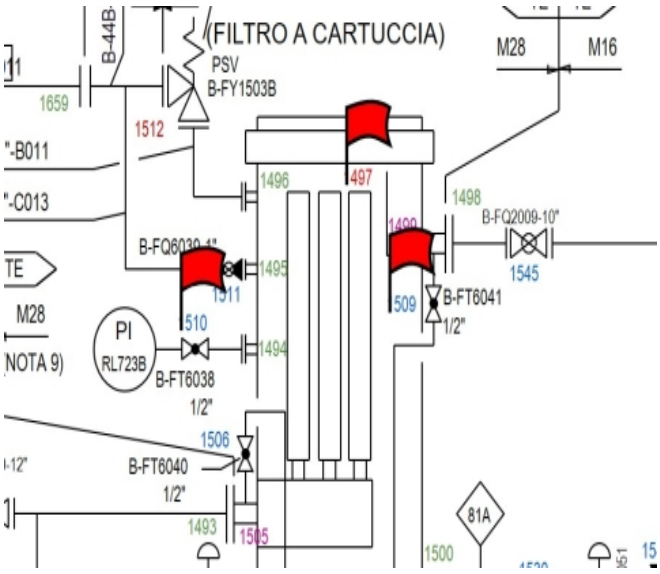

Measurement Data

Stream:	CH4	RF 500:	1	☑ Is Leak
Service:	G	RF 10000:	1	☑ Need Repair
Detect. Equipment:	TVA-FIDC / HGX-3	Leak Def.:	1000	
Calibration Medium:	METANO	Tag Def.:	100	
Calculation Method:	CORR	Repair Def.:	10000	

Source Name	PPM	Loss, kg/yr	Status	Date
1497-01-FL_IN	11000	100,79	Measured	2022-06-22
1497-02-FL_OUT	6700	65,00	Measured	2022-06-22
1497-03-FL_SEAL	350	4,77	Measured	2022-06-22

Maintenance Information

Flange Name	Flanges Qty	Flange Type	Dn	Pn	Gasket Type	InD	OuD	Bolts Qty	Bolt D	Bolt L	Torque, [N-m]	Bolt Material

Repair Number:

REPAIR ORDER

Drawing:	(03)_P12TV02476.tpd	Description:	
Location:	TPW-03-CN-CN-03495 : 1507		
Class:	CONNETTORI		
Sub Class:	CONNETTORI		
Asset Name:	**1507**	**Asset Tag:**	**1507**

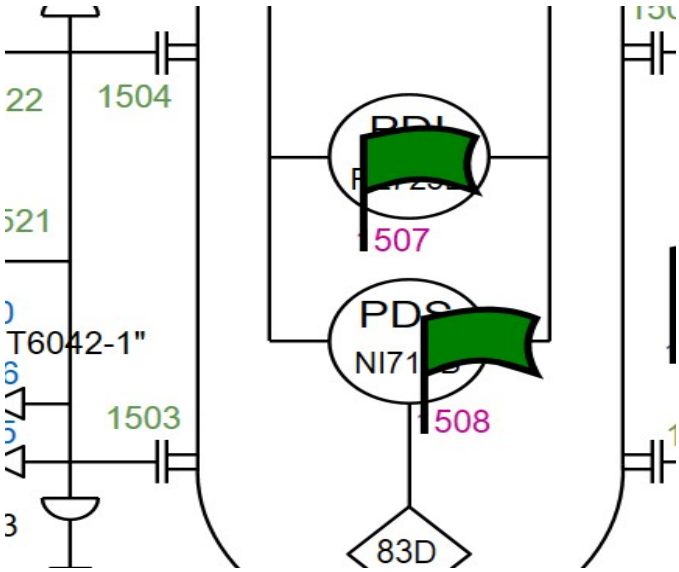

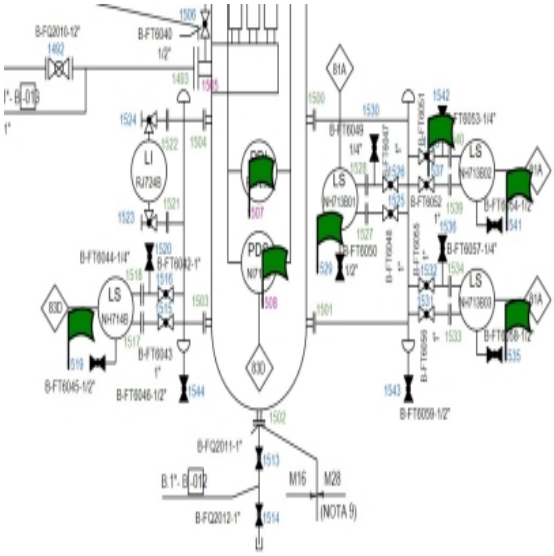

Measurement Data

Stream:	CH4	RF 500:	1	☑ Is Leak
Service:	G	RF 10000:	1	☐ Need Repair
Detect. Equipment:	TVA-FIDC / HGX-3	Leak Def.:	1000	
Calibration Medium:	METANO	Tag Def.:	100	
Calculation Method:	CORR	Repair Def.:	10000	

Source Name	PPM	Loss, kg/yr	Status	Date
1507-01-CN_IN	1400	16,26	Measured	2022-06-22
1507-02-CN_OUT1	100	1,57	Measured	2022-06-22
1507-03-CN_OUT2	6000	58,95	Measured	2022-06-22
1507-04-OTHERS-C	80	1,29	Measured	2022-06-22

Maintenance Information

Flange Name	Flanges Qty	Flange Type	Dn	Pn	Gasket Type	InD	OuD	Bolts Qty	Bolt D	Bolt L	Torque, [N-m]	Bolt Material

Repair Number:

REPAIR ORDER

Drawing:	(03)_P12TV02476.tpd	Description:	
Location:	TPW-03-CN-CN-03494 : 1508		
Class:	CONNETTORI		
Sub Class:	CONNETTORI		
Asset Name:	**1508**	**Asset Tag:**	**1508**

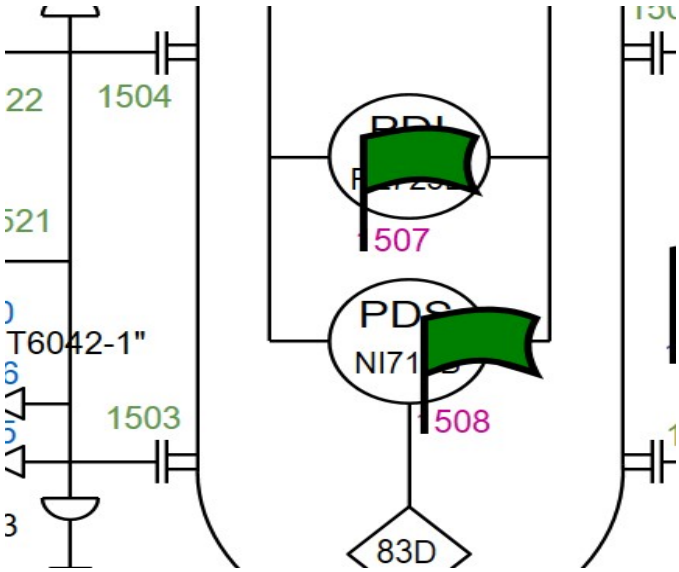

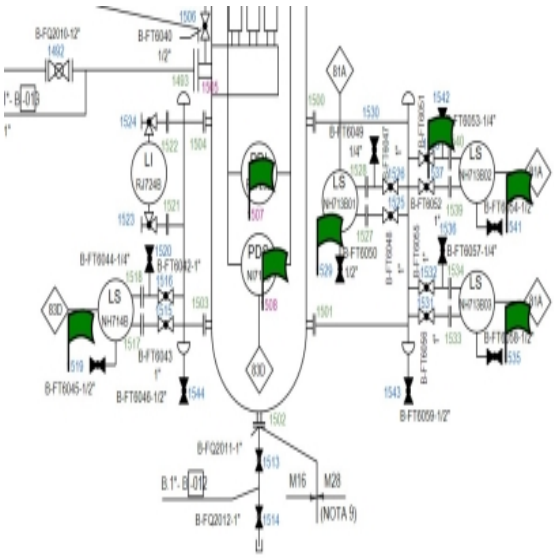

Measurement Data

Stream:	CH4	RF 500:	1
Service:	G	RF 10000:	1
Detect. Equipment:	TVA-FIDC / HGX-3	Leak Def.:	1000
Calibration Medium:	METANO	Tag Def.:	100
Calculation Method:	CORR	Repair Def.:	10000

☑ Is Leak
☐ Need Repair

Source Name	PPM	Loss, kg/yr	Status	Date
1508-01-CN_IN	1400	16,26	Measured	2022-06-22
1508-02-CN_OUT1	80	1,29	Measured	2022-06-22
1508-03-CN_OUT2	60	1,00	Measured	2022-06-22
1508-04-OTHERS-C	110	1,71	Measured	2022-06-22

Maintenance Information

Flange Name	Flanges Qty	Flange Type	Dn	Pn	Gasket Type	InD	OuD	Bolts Qty	Bolt D	Bolt L	Torque, [N-m]	Bolt Material

Repair Number:

REPAIR ORDER

Drawing:	(03)_P12TV02476.tpd	Description:	
Location:	TPW-03-VA-HV-19699 : 1519		
Class:	VALVOLA		
Sub Class:	VALVOLA MANUALE		
Asset Name:	**1519**	**Asset Tag:**	**1519**

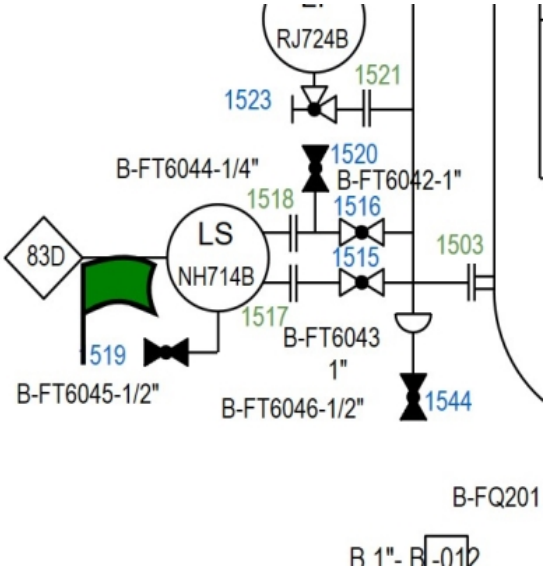

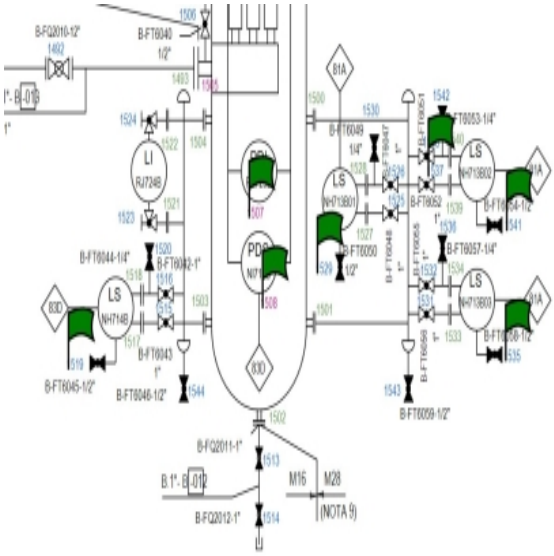

Measurement Data

Stream:	CH4	RF 500:	1	☑ Is Leak
Service:	G	RF 10000:	1	☐ Need Repair
Detect. Equipment:	TVA-FIDC / HGX-3	Leak Def.:	1000	
Calibration Medium:	METANO	Tag Def.:	100	
Calculation Method:	CORR	Repair Def.:	10000	

Source Name	PPM	Loss, kg/yr	Status	Date
1519-01-FL_IN-V	1200	14,19	Measured	2022-06-22
1519-02-FL_OUT-V	600	7,68	Measured	2022-06-22
1519-03-SV	116	1,04	Measured	2022-06-22
1519-04-BN	5	0,01	Measured	2022-06-22
1519-05-BF	7	0,01	Measured	2022-06-22

Maintenance Information

Flange Name	Flanges Qty	Flange Type	Dn	Pn	Gasket Type	InD	OuD	Bolts Qty	Bolt D	Bolt L	Torque, [N-m]	Bolt Material

Repair Number:

REPAIR ORDER

Drawing:	(03)_P12TV02476.tpd	Description:	
Location:	TPW-03-VA-HV-19693 : 1529		
Class:	VALVOLA		
Sub Class:	VALVOLA MANUALE		
Asset Name:	**1529**	**Asset Tag:**	**1529**

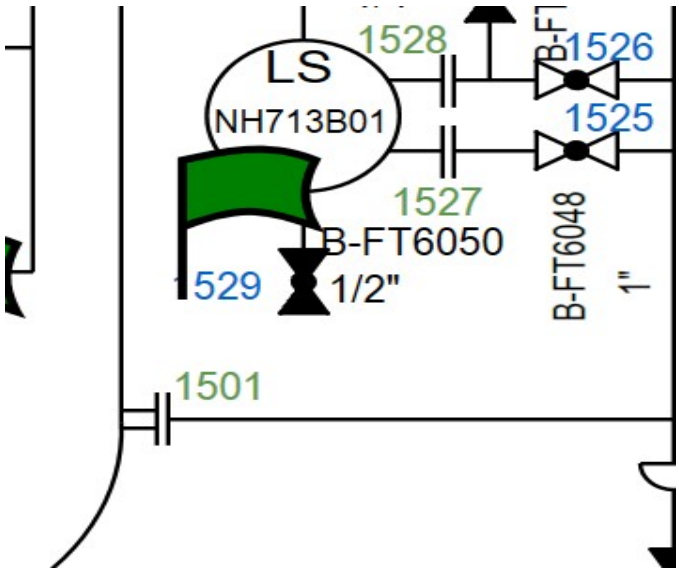

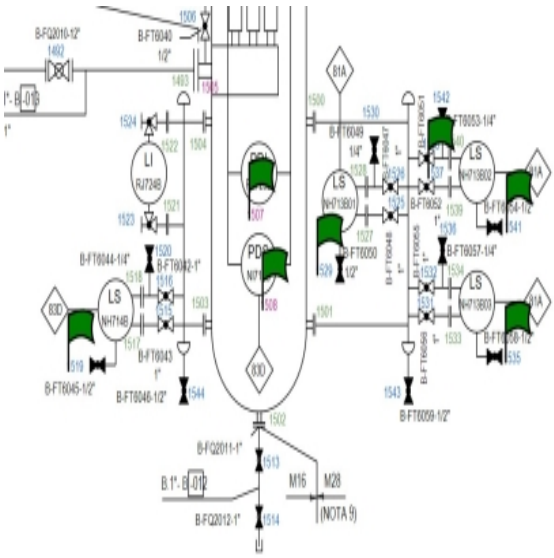

Measurement Data

Stream:	CH4	RF 500:	1	☑ Is Leak
Service:	G	RF 10000:	1	☐ Need Repair
Detect. Equipment:	TVA-FIDC / HGX-3	Leak Def.:	1000	
Calibration Medium:	METANO	Tag Def.:	100	
Calculation Method:	CORR	Repair Def.:	10000	

Source Name	PPM	Loss, kg/yr	Status	Date
1529-01-FL_IN-V	15	0,29	Measured	2022-06-22
1529-02-FL_OUT-V	23	0,43	Measured	2022-06-22
1529-03-SV	7000	37,25	Measured	2022-06-22
1529-04-BN	7	0,01	Measured	2022-06-22
1529-05-BF	1	0,01	Measured	2022-06-22

Maintenance Information

Flange Name	Flanges Qty	Flange Type	Dn	Pn	Gasket Type	InD	OuD	Bolts Qty	Bolt D	Bolt L	Torque, [N-m]	Bolt Material

Repair Number:

REPAIR ORDER

Drawing:	(03)_P12TV02476.tpd	Description:	
Location:	TPW-03-VA-HV-19689 : 1535		
Class:	VALVOLA		
Sub Class:	VALVOLA MANUALE		
Asset Name:	**1535**	**Asset Tag:**	**1535**

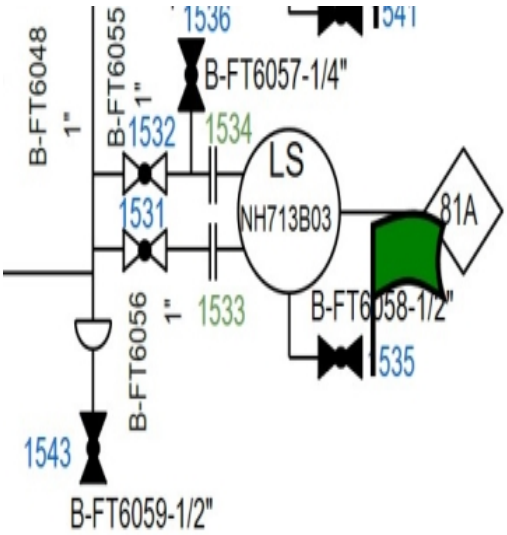

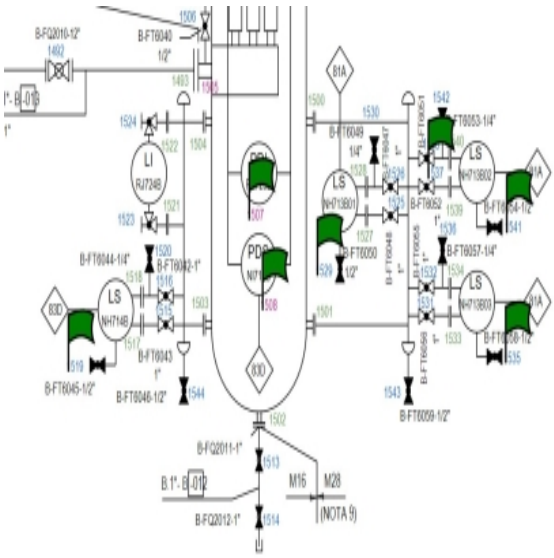

Measurement Data

Stream:	CH4	RF 500:	1	☑ Is Leak
Service:	G	RF 10000:	1	☐ Need Repair
Detect. Equipment:	TVA-FIDC / HGX-3	Leak Def.:	1000	
Calibration Medium:	METANO	Tag Def.:	100	
Calculation Method:	CORR	Repair Def.:	10000	

Source Name	PPM	Loss, kg/yr	Status	Date
1535-01-FL_IN-V	2300	25,23	Measured	2022-06-22
1535-02-FL_OUT-V	2	0,01	Measured	2022-06-22
1535-03-SV	35	0,37	Measured	2022-06-22
1535-04-BN	1	0,01	Measured	2022-06-22
1535-05-BF	4	0,01	Measured	2022-06-22

Maintenance Information

Flange Name	Flanges Qty	Flange Type	Dn	Pn	Gasket Type	InD	OuD	Bolts Qty	Bolt D	Bolt L	Torque, [N-m]	Bolt Material

Repair Number:

REPAIR ORDER

Drawing:	(03)_P12TV02476.tpd	Description:	
Location:	TPW-03-VA-HV-19687 : 1537		
Class:	VALVOLA		
Sub Class:	VALVOLA MANUALE		
Asset Name:	**1537**	**Asset Tag:**	**1537**

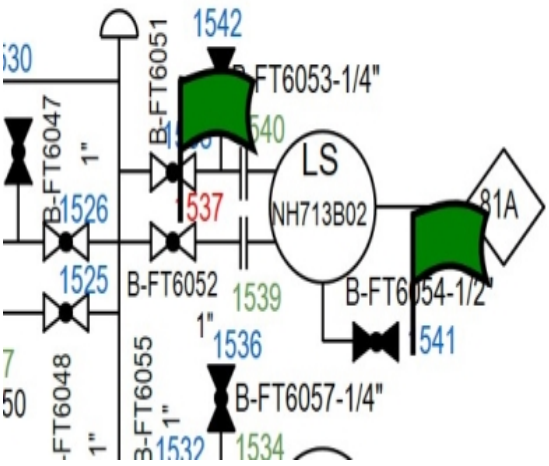

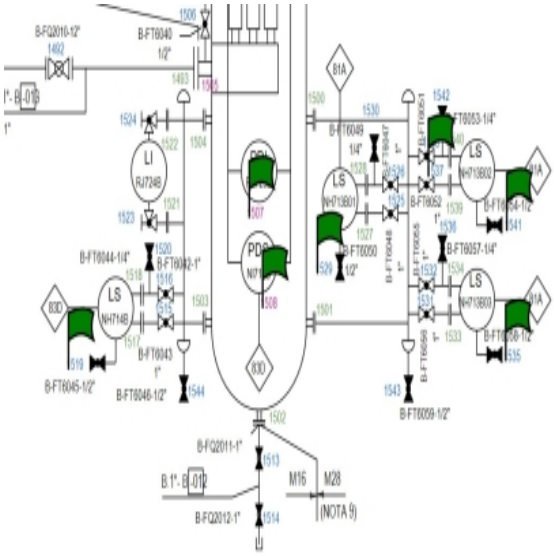

Measurement Data

Stream:	CH4	RF 500:	1	☑ Is Leak
Service:	G	RF 10000:	1	☐ Need Repair
Detect. Equipment:	TVA-FIDC / HGX-3	Leak Def.:	1000	
Calibration Medium:	METANO	Tag Def.:	100	
Calculation Method:	CORR	Repair Def.:	10000	

Source Name	PPM	Loss, kg/yr	Status	Date
1537-01-FL_IN-V	70	1,15	Measured	2022-06-22
1537-02-FL_OUT-V	3300	34,73	Measured	2022-06-22
1537-03-SV	6	0,01	Measured	2022-06-22
1537-04-BN	6	0,01	Measured	2022-06-22
1537-05-BF	1	0,01	Measured	2022-06-22

Maintenance Information

Flange Name	Flanges Qty	Flange Type	Dn	Pn	Gasket Type	InD	OuD	Bolts Qty	Bolt D	Bolt L	Torque, [N-m]	Bolt Material

Repair Number:

REPAIR ORDER

Drawing:	(03)_P12TV02476.tpd	Description:	
Location:	TPW-03-VA-HV-19685 : 1541		
Class:	VALVOLA		
Sub Class:	VALVOLA MANUALE		
Asset Name:	**1541**	**Asset Tag:**	**1541**

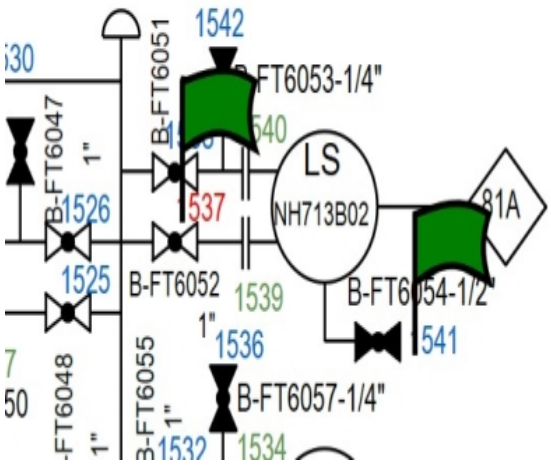

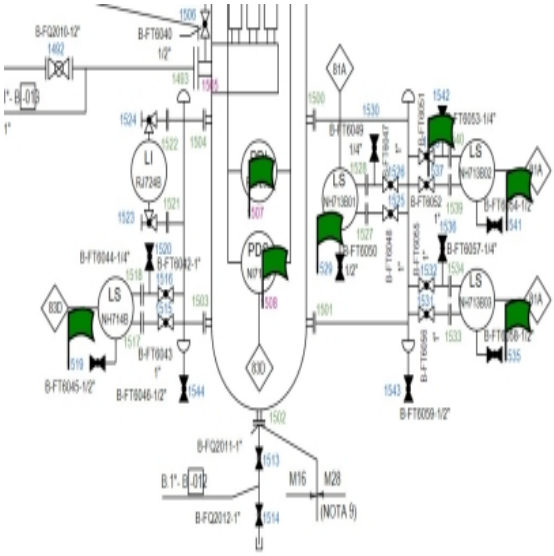

Measurement Data

Stream:	CH4	RF 500:	1	☑ Is Leak
Service:	G	RF 10000:	1	☐ Need Repair
Detect. Equipment:	TVA-FIDC / HGX-3	Leak Def.:	1000	
Calibration Medium:	METANO	Tag Def.:	100	
Calculation Method:	CORR	Repair Def.:	10000	

Source Name	PPM	Loss, kg/yr	Status	Date
1541-01-FL_IN-V	2500	27,16	Measured	2022-06-22
1541-02-FL_OUT-V	5	0,01	Measured	2022-06-22
1541-03-SV	4	0,01	Measured	2022-06-22
1541-04-BN	3	0,01	Measured	2022-06-22
1541-05-BF	4	0,01	Measured	2022-06-22

Maintenance Information

Flange Name	Flanges Qty	Flange Type	Dn	Pn	Gasket Type	InD	OuD	Bolts Qty	Bolt D	Bolt L	Torque, [N-m]	Bolt Material

Repair Number:

REPAIR ORDER

Drawing:	(03)_P12TV02476.tpd	Description:	
Location:	TPW-03-FL-FL-12162 : 1607		
Class:	FLANGE		
Sub Class:	FLANGE		
Asset Name:	**1607**	**Asset Tag:**	**1607**

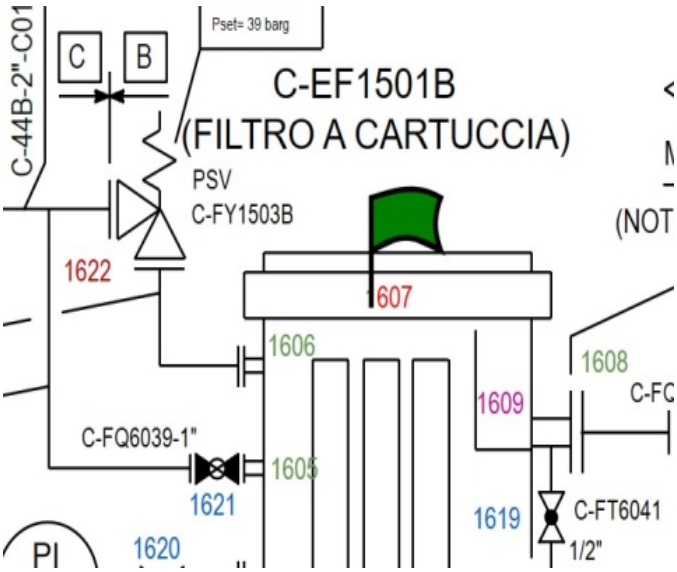

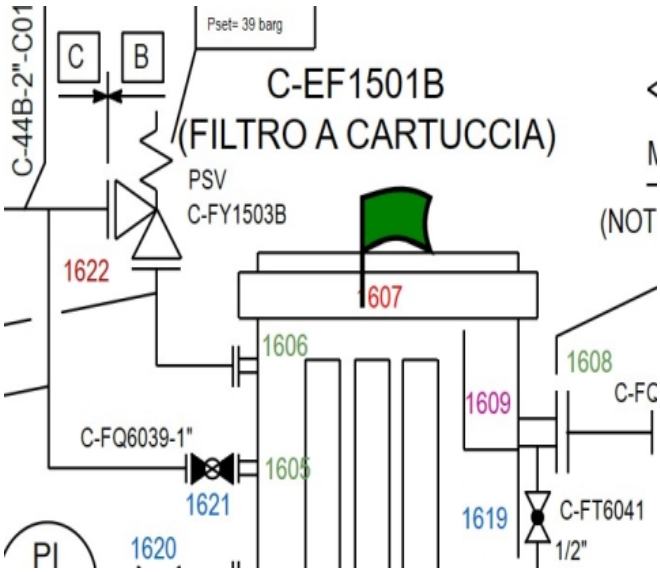

Measurement Data

Stream:	CH4	RF 500:	1	☑ Is Leak
Service:	G	RF 10000:	1	☐ Need Repair
Detect. Equipment:	TVA-FIDC / HGX-3	Leak Def.:	1000	
Calibration Medium:	METANO	Tag Def.:	100	
Calculation Method:	CORR	Repair Def.:	10000	

Source Name	PPM	Loss, kg/yr	Status	Date
1607-01-FL_IN	5000	50,16	Measured	2022-06-22
1607-02-FL_OUT	25	0,46	Measured	2022-06-22
1607-03-FL_SEAL	31	0,56	Measured	2022-06-22

Maintenance Information

Flange Name	Flanges Qty	Flange Type	Dn	Pn	Gasket Type	InD	OuD	Bolts Qty	Bolt D	Bolt L	Torque, [N-m]	Bolt Material

Repair Number:

REPAIR ORDER

Drawing:	(03)_P12TV02476.tpd	Description:	
Location:	TPW-03-FL-FL-12159 : 1611		
Class:	FLANGE		
Sub Class:	FLANGE		
Asset Name:	**1611**	**Asset Tag:**	**1611**

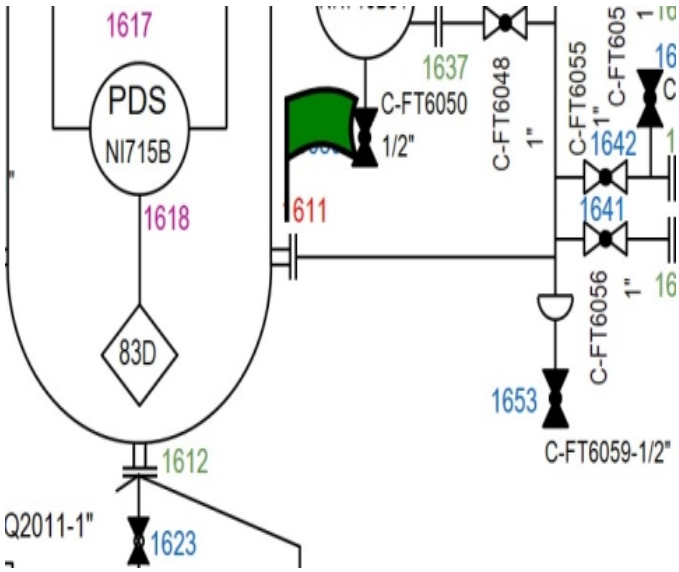

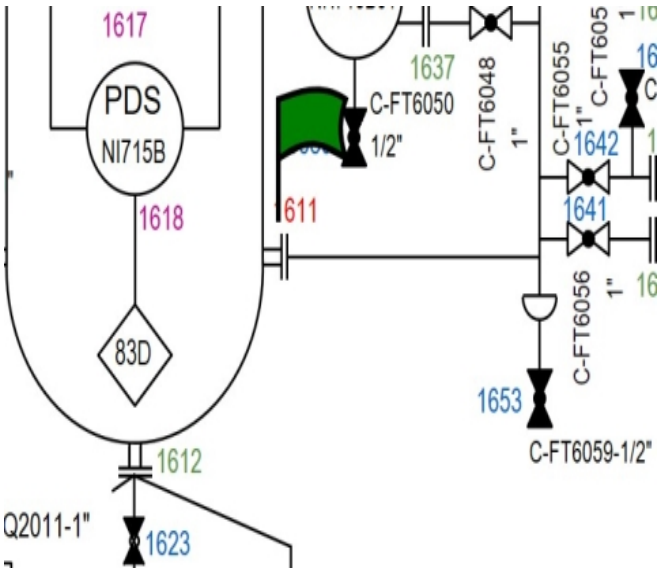

Measurement Data

Stream:	CH4	RF 500:	1	☑ Is Leak
Service:	G	RF 10000:	1	☐ Need Repair
Detect. Equipment:	TVA-FIDC / HGX-3	Leak Def.:	1000	
Calibration Medium:	METANO	Tag Def.:	100	
Calculation Method:	CORR	Repair Def.:	10000	

Source Name	PPM	Loss, kg/yr	Status	Date
1611-01-FL_IN	1300	15,23	Measured	2022-06-22
1611-02-FL_OUT	22	0,41	Measured	2022-06-22
1611-03-FL_SEAL	2	0,01	Measured	2022-06-22

Maintenance Information

Flange Name	Flanges Qty	Flange Type	Dn	Pn	Gasket Type	InD	OuD	Bolts Qty	Bolt D	Bolt L	Torque, [N-m]	Bolt Material

Repair Number:

REPAIR ORDER

Drawing:	(03)_P12TV02476.tpd	Description:	
Location:	TPW-03-FL-FL-12156 : 1614		
Class:	FLANGE		
Sub Class:	FLANGE		
Asset Name:	**1614**	**Asset Tag:**	**1614**

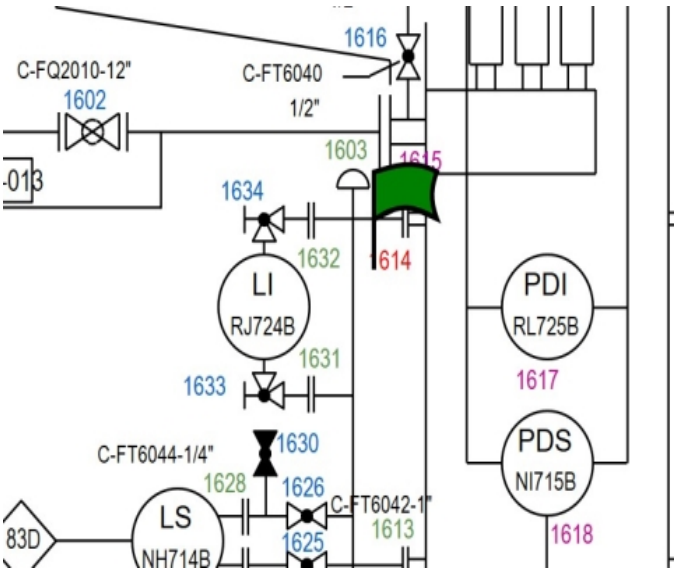

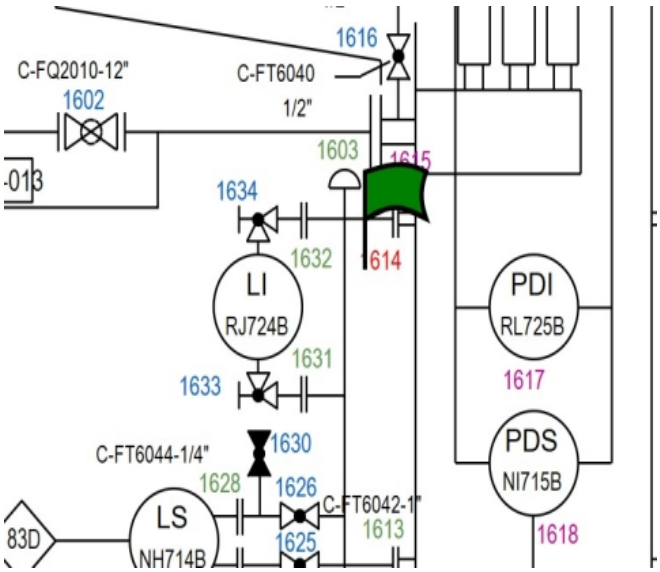

Measurement Data

Stream:	CH4	RF 500:	1	☑ Is Leak
Service:	G	RF 10000:	1	☐ Need Repair
Detect. Equipment:	TVA-FIDC / HGX-3	Leak Def.:	1000	
Calibration Medium:	METANO	Tag Def.:	100	
Calculation Method:	CORR	Repair Def.:	10000	

Source Name	PPM	Loss, kg/yr	Status	Date
1614-01-FL_IN	1200	14,19	Measured	2022-06-22
1614-02-FL_OUT	10	0,21	Measured	2022-06-22
1614-03-FL_SEAL	3	0,01	Measured	2022-06-22

Maintenance Information

Flange Name	Flanges Qty	Flange Type	Dn	Pn	Gasket Type	InD	OuD	Bolts Qty	Bolt D	Bolt L	Torque, [N-m]	Bolt Material

Repair Number:

REPAIR ORDER

Drawing:	(03)_P12TV02476.tpd	Description:	
Location:	TPW-03-VA-HV-19619 : 1668		
Class:	VALVOLA		
Sub Class:	VALVOLA MANUALE		
Asset Name:	**1668**	**Asset Tag:**	**1668**

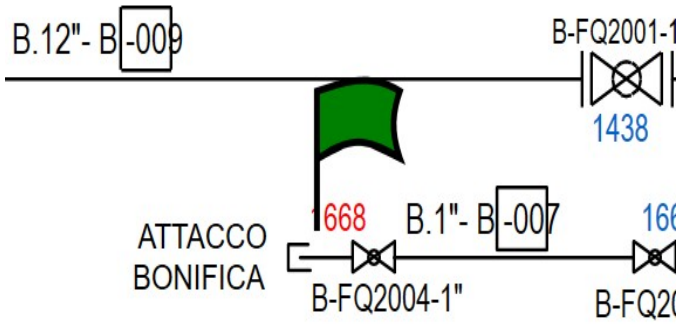

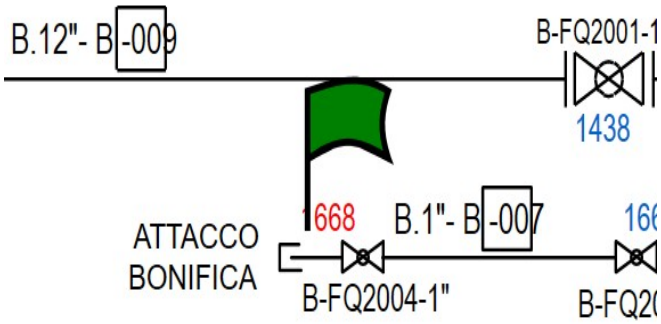

Measurement Data

Stream:	CH4	RF 500:	1	☑ Is Leak
Service:	G	RF 10000:	1	☐ Need Repair
Detect. Equipment:	TVA-FIDC / HGX-3	Leak Def.:	1000	
Calibration Medium:	METANO	Tag Def.:	100	
Calculation Method:	CORR	Repair Def.:	10000	

Source Name	PPM	Loss, kg/yr	Status	Date
1668-01-FL_IN-V	1200	14,19	Measured	2022-06-23
1668-02-FL_OUT-V	11	0,22	Measured	2022-06-23
1668-03-SV	14	0,16	Measured	2022-06-23
1668-04-BN	4	0,01	Measured	2022-06-23
1668-05-BF	5	0,01	Measured	2022-06-23

Maintenance Information

Flange Name	Flanges Qty	Flange Type	Dn	Pn	Gasket Type	InD	OuD	Bolts Qty	Bolt D	Bolt L	Torque, [N-m]	Bolt Material

Repair Number:

REPAIR ORDER

Drawing:	(03)_P12TV02476.tpd	Description:	
Location:	TPW-03-CN-CN-03482 : 1681		
Class:	CONNETTORI		
Sub Class:	CONNETTORI		
Asset Name:	**1681**	**Asset Tag:**	**1681**

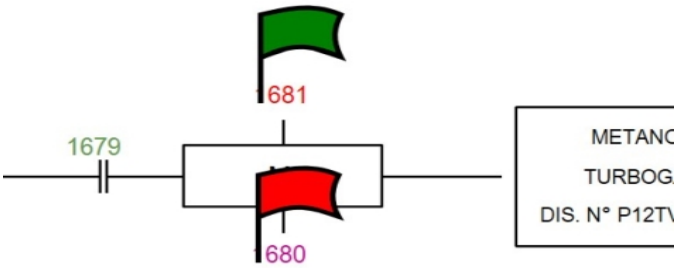

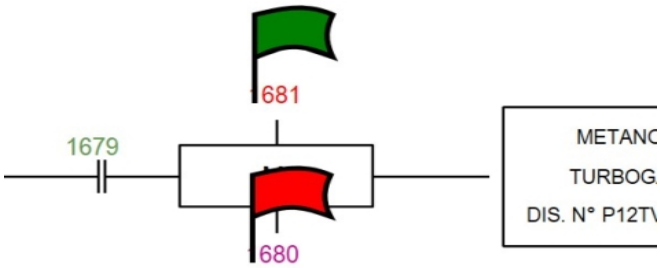

Measurement Data

Stream:	CH4	RF 500:	1	☑ Is Leak
Service:	G	RF 10000:	1	☐ Need Repair
Detect. Equipment:	TVA-FIDC / HGX-3	Leak Def.:	1000	
Calibration Medium:	METANO	Tag Def.:	100	
Calculation Method:	CORR	Repair Def.:	10000	

Source Name	PPM	Loss, kg/yr	Status	Date
1681-01-CN_IN	11	0,22	Measured	2022-06-23
1681-02-CN_OUT1	7	0,01	Measured	2022-06-23
1681-03-CN_OUT2	2300	25,23	Measured	2022-06-23
1681-04-OTHERS-C	6	0,01	Measured	2022-06-23

Maintenance Information

Flange Name	Flanges Qty	Flange Type	Dn	Pn	Gasket Type	InD	OuD	Bolts Qty	Bolt D	Bolt L	Torque, [N-m]	Bolt Material

ORION S.r.l.

A: Via A. Volta, 25/b - 35030 Veggiano (PD) - Italy
P: +39 049 9006.911 - F: +39 049 9006939
E: info@orion-srl.it - W: www.orion-srl.it

3 SCHEDE DI RILEVAZIONE EMISSIONI PER VALORI MAGGIORI O UGUALI ALLA SOGLIA DI PERDITA

In questa sezione sono riportate tutte le Schede di rilevazione emissioni con concentrazione uguale o superiore al valore di Soglia di Perdita – Repair Definition

Name	Description	Detection Equipment	Repair Def [ppmv]	Production Hours
CH4	Stream 01	TVA-FID	10.000	8.760

LEGGENDA:

SIGLA	STATO
C	COIBENTATO
NA	NON RAGGIUNGIBILE
NS	NON SICURO

Repair Number:

REPAIR ORDER

Drawing:	(01)_P12TV1722004.tpd	Description:	
Location:	TPW-01-CN-CN-03449 : 1008		
Class:	CONNETTORI		
Sub Class:	CONNETTORI		
Asset Name:	**1008**	**Asset Tag:**	**1008**

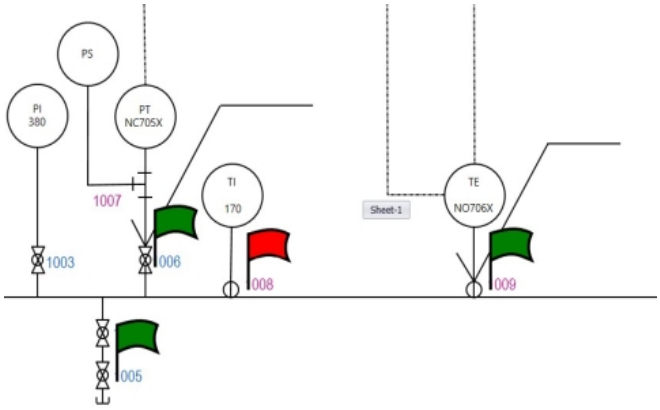

Measurement Data

Stream:	CH4	RF 500:	1	☑ Is Leak
Service:	G	RF 10000:	1	☑ Need Repair
Detect. Equipment:	TVA-FIDC / HGX-3	Leak Def.:	1000	
Calibration Medium:	METANO	Tag Def.:	100	
Calculation Method:	CORR	Repair Def.:	10000	

Source Name	PPM	Loss, kg/yr	Status	Date
1008-01-CN_IN	7	0.01	Measured	2022-06-21
1008-02-CN_OUT1	22000	186.14	Measured	2022-06-21
1008-03-CN_OUT2	5	0.01	Measured	2022-06-21

Maintenance Information

Flange Name	Flanges Qty	Flange Type	Dn	Pn	Gasket Type	InD	OuD	Bolts Qty	Bolt D	Bolt L	Torque, [N-m]	Bolt Material

Repair Number:

REPAIR ORDER

Drawing:	(01)_P12TV1722004.tpd	Description:	
Location:	TPW-01-VA-HV-19326 : 1030		
Class:	VALVOLA		
Sub Class:	VALVOLA MANUALE		
Asset Name:	**1030**	**Asset Tag:**	**1030**

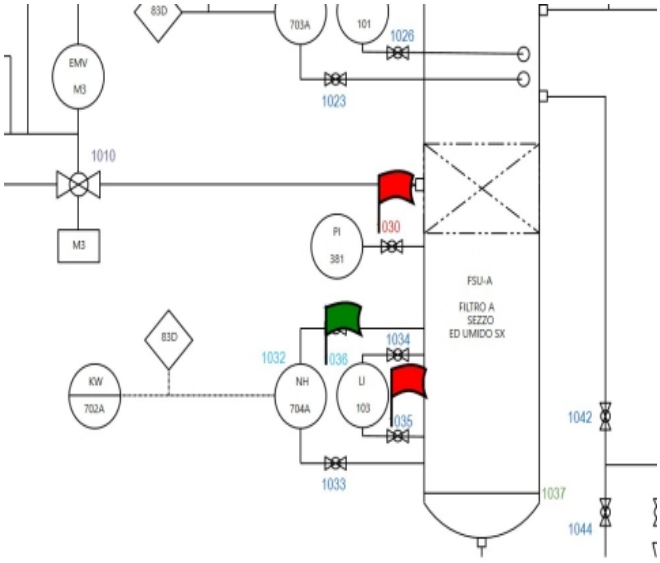

Measurement Data

Stream:	CH4	RF 500:	1	☑ Is Leak
Service:	G	RF 10000:	1	☑ Need Repair
Detect. Equipment:	TVA-FIDC / HGX-3	Leak Def.:	1000	
Calibration Medium:	METANO	Tag Def.:	100	
Calculation Method:	CORR	Repair Def.:	10000	

Source Name	PPM	Loss, kg/yr	Status	Date
1030-01-FL_IN-V	3	0.01	Measured	2022-06-21
1030-02-FL_OUT-V	6	0.01	Measured	2022-06-21
1030-03-SV	11000	55.27	Measured	2022-06-21

Maintenance Information

Flange Name	Flanges Qty	Flange Type	Dn	Pn	Gasket Type	InD	OuD	Bolts Qty	Bolt D	Bolt L	Torque, [N-m]	Bolt Material

Repair Number:

REPAIR ORDER

Drawing:	(01)_P12TV1722004.tpd	Description:	
Location:	TPW-01-VA-HV-19322 : 1035		
Class:	VALVOLA		
Sub Class:	VALVOLA MANUALE		
Asset Name:	**1035**	**Asset Tag:**	**1035**

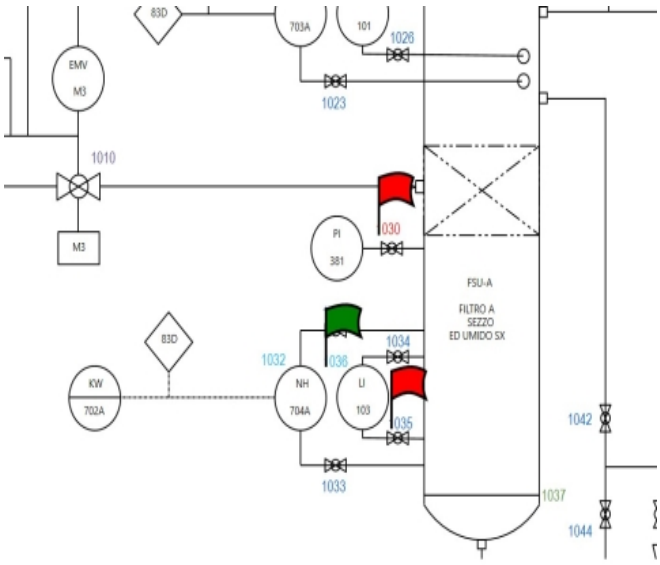

Measurement Data

Stream:	CH4	RF 500:	1	☑ Is Leak
Service:	G	RF 10000:	1	☑ Need Repair
Detect. Equipment:	TVA-FIDC / HGX-3	Leak Def.:	1000	
Calibration Medium:	METANO	Tag Def.:	100	
Calculation Method:	CORR	Repair Def.:	10000	

Source Name	PPM	Loss, kg/yr	Status	Date
1035-01-FL_IN-V	10000	92.64	Measured	2022-06-21
1035-02-FL_OUT-V	16	0.31	Measured	2022-06-21
1035-03-SV	9	0.02	Measured	2022-06-21

Maintenance Information

Flange Name	Flanges Qty	Flange Type	Dn	Pn	Gasket Type	InD	OuD	Bolts Qty	Bolt D	Bolt L	Torque, [N-m]	Bolt Material

Repair Number:

REPAIR ORDER

Drawing:	(02)_P12TV1722104.tpd	Description:	
Location:	TPW-02-VA-HV-19440 : 1142		
Class:	VALVOLA		
Sub Class:	VALVOLA MANUALE		
Asset Name:	**1142**	**Asset Tag:**	**1142**

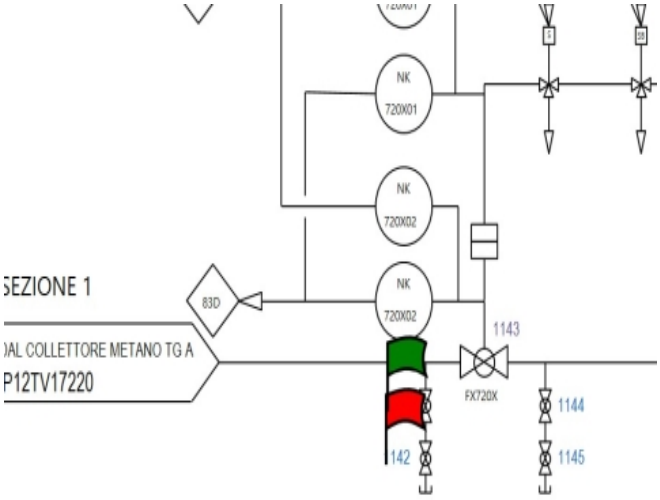

Measurement Data

Stream:	CH4	RF 500:	1	☑ Is Leak
Service:	G	RF 10000:	1	☑ Need Repair
Detect. Equipment:	TVA-FIDC / HGX-3	Leak Def.:	1000	
Calibration Medium:	METANO	Tag Def.:	100	
Calculation Method:	CORR	Repair Def.:	10000	

Source Name	PPM	Loss, kg/yr	Status	Date
1142-01-FL_IN-V	10000	92.64	Measured	2022-06-21
1142-02-FL_OUT-V	40	0.70	Measured	2022-06-21
1142-03-SV	800	5.61	Measured	2022-06-21

Maintenance Information

Flange Name	Flanges Qty	Flange Type	Dn	Pn	Gasket Type	InD	OuD	Bolts Qty	Bolt D	Bolt L	Torque, [N-m]	Bolt Material

Repair Number:

REPAIR ORDER

Drawing:	(02)_P12TV1722104.tpd	Description:	
Location:	TPW-02-VA-HV-19432 : 1157		
Class:	VALVOLA		
Sub Class:	VALVOLA MANUALE		
Asset Name:	**1157**	**Asset Tag:**	**1157**

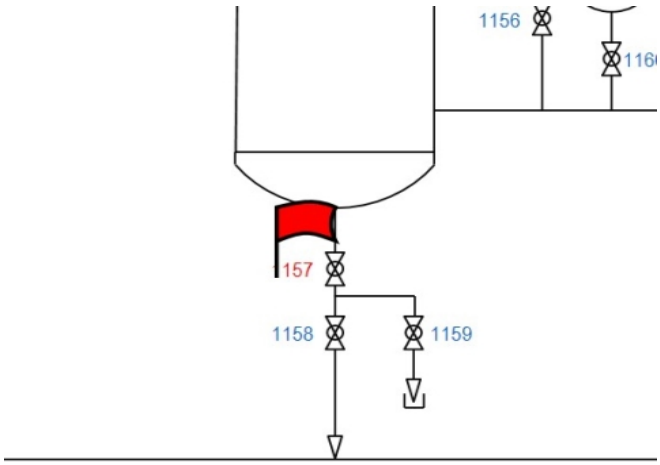

Measurement Data

Stream:	CH4	RF 500:	1	☑ Is Leak
Service:	G	RF 10000:	1	☑ Need Repair
Detect. Equipment:	TVA-FIDC / HGX-3	Leak Def.:	1000	
Calibration Medium:	METANO	Tag Def.:	100	
Calculation Method:	CORR	Repair Def.:	10000	

Source Name	PPM	Loss, kg/yr	Status	Date
1157-01-FL_IN-V	6	0.01	Measured	2022-06-21
1157-02-FL_OUT-V	4	0.01	Measured	2022-06-21
1157-03-SV	10000	50.86	Measured	2022-06-21
1157-04-BN	1	0.01	Measured	2022-06-21
1157-05-BF	1	0.01	Measured	2022-06-21

Maintenance Information

Flange Name	Flanges Qty	Flange Type	Dn	Pn	Gasket Type	InD	OuD	Bolts Qty	Bolt D	Bolt L	Torque, [N-m]	Bolt Material

Repair Number:

REPAIR ORDER

Drawing:	(02)_P12TV1722104.tpd	Description:	
Location:	TPW-02-VA-HV-19419 : 1176		
Class:	VALVOLA		
Sub Class:	VALVOLA MANUALE		
Asset Name:	**1176**	**Asset Tag:**	**1176**

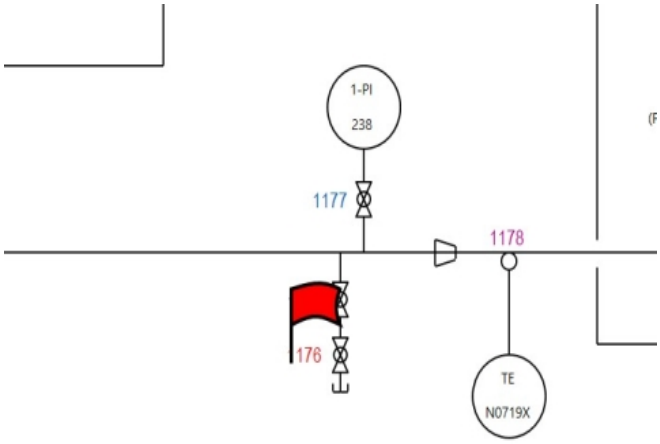

Measurement Data

Stream:	CH4	RF 500:	1	☑ Is Leak
Service:	G	RF 10000:	1	☑ Need Repair
Detect. Equipment:	TVA-FIDC / HGX-3	Leak Def.:	1000	
Calibration Medium:	METANO	Tag Def.:	100	
Calculation Method:	CORR	Repair Def.:	10000	

Source Name	PPM	Loss, kg/yr	Status	Date
1176-01-FL_IN-V	5	0.01	Measured	2022-06-21
1176-02-FL_OUT-V	10000	92.64	Measured	2022-06-21
1176-03-SV	2	0.01	Measured	2022-06-21
1176-04-BN	1	0.01	Measured	2022-06-21
1176-05-BF	1	0.01	Measured	2022-06-21

Maintenance Information

Flange Name	Flanges Qty	Flange Type	Dn	Pn	Gasket Type	InD	OuD	Bolts Qty	Bolt D	Bolt L	Torque, [N-m]	Bolt Material

Repair Number:

REPAIR ORDER

Drawing:	(02)_P12TV1722104.tpd	Description:	
Location:	TPW-02-EQ-MI-00220 : 1215		
Class:	APPARECCHIATURE		
Sub Class:	MISURATORE		
Asset Name:	**1215**	**Asset Tag:**	**1215**

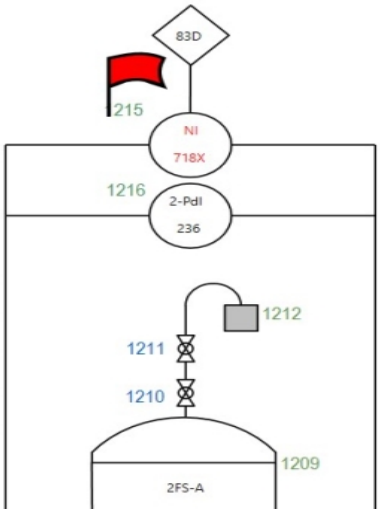

Measurement Data

Stream:	CH4	RF 500:	1	☑ Is Leak
Service:	G	RF 10000:	1	☑ Need Repair
Detect. Equipment:	TVA-FIDC / HGX-3	Leak Def.:	1000	
Calibration Medium:	METANO	Tag Def.:	100	
Calculation Method:	CORR	Repair Def.:	10000	

Source Name	PPM	Loss, kg/yr	Status	Date
1215-01-VA_IN-EQ	4	0.01	Measured	2022-06-22
1215-02-VA_OUT-EQ	17	0.19	Measured	2022-06-22
1215-03-EQ_BYPASS	3	0.01	Measured	2022-06-22
1215-04-EQ-PURGE	1	0.01	Measured	2022-06-22
1215-05-EQ-VENT	2	0.01	Measured	2022-06-22
1215-06-OTHERS-EQ	50000	1927.20	Measured	2022-06-22

Maintenance Information

Flange Name	Flanges Qty	Flange Type	Dn	Pn	Gasket Type	InD	OuD	Bolts Qty	Bolt D	Bolt L	Torque, [N-m]	Bolt Material

Repair Number:

REPAIR ORDER

Drawing:	(02)_P12TV1722104.tpd	Description:	
Location:	TPW-02-VA-HV-19384 : 1237		
Class:	VALVOLA		
Sub Class:	VALVOLA MANUALE		
Asset Name:	**1237**	**Asset Tag:**	**1237**

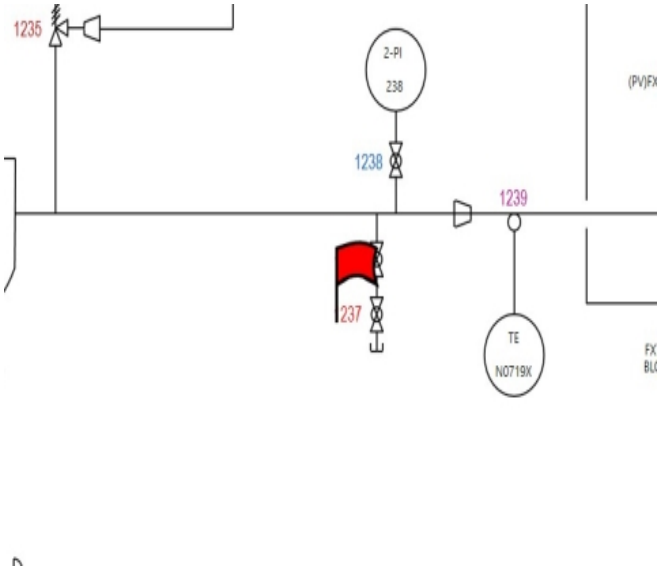

Measurement Data

Stream:	CH4	RF 500:	1	☑ Is Leak
Service:	G	RF 10000:	1	☑ Need Repair
Detect. Equipment:	TVA-FIDC / HGX-3	Leak Def.:	1000	
Calibration Medium:	METANO	Tag Def.:	100	
Calculation Method:	CORR	Repair Def.:	10000	

Source Name	PPM	Loss, kg/yr	Status	Date
1237-01-FL_IN-V	2	0.01	Measured	2022-06-22
1237-02-FL_OUT-V	50000	1927.20	Measured	2022-06-22

Maintenance Information

Flange Name	Flanges Qty	Flange Type	Dn	Pn	Gasket Type	InD	OuD	Bolts Qty	Bolt D	Bolt L	Torque, [N-m]	Bolt Material

Repair Number:

REPAIR ORDER

Drawing:	(02)_P12TV1722104.tpd	Description:	
Location:	TPW-02-VA-PV-03104 : 1240		
Class:	VALVOLA		
Sub Class:	VALVOLA AUTOREGOLATRICE DI PRESSIONE		
Asset Name:	**1240**	**Asset Tag:**	**1240**

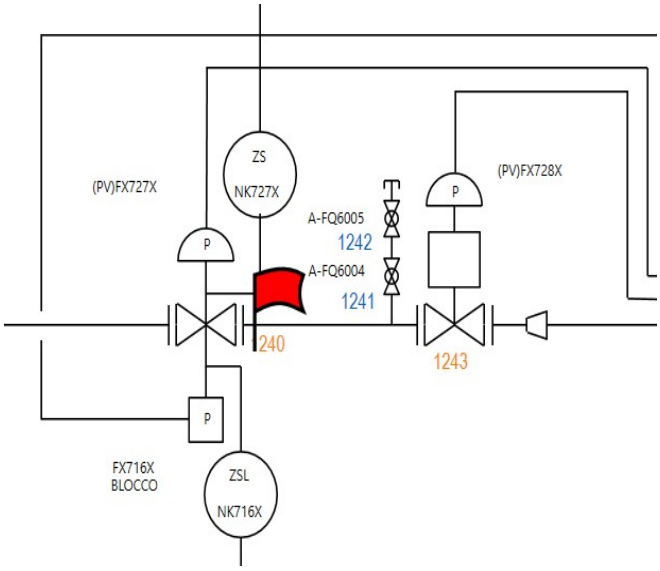

Measurement Data

Stream:	CH4	RF 500:	1	☑ Is Leak
Service:	G	RF 10000:	1	☑ Need Repair
Detect. Equipment:	TVA-FIDC / HGX-3	Leak Def.:	1000	
Calibration Medium:	METANO	Tag Def.:	100	
Calculation Method:	CORR	Repair Def.:	10000	

Source Name	PPM	Loss, kg/yr	Status	Date
1240-01-FL_IN-V	2	0.01	Measured	2022-06-22
1240-02-FL_OUT-V	2	0.01	Measured	2022-06-22
1240-03-SV	50	0.50	Measured	2022-06-22
1240-04-BN	200	1.67	Measured	2022-06-22
1240-05-BF	50	0.85	Measured	2022-06-22
1240-06-OTHERS-V	10000	92.64	Measured	2022-06-22

Maintenance Information

Flange Name	Flanges Qty	Flange Type	Dn	Pn	Gasket Type	InD	OuD	Bolts Qty	Bolt D	Bolt L	Torque, [N-m]	Bolt Material

Repair Number:

REPAIR ORDER

Drawing:	(02)_P12TV1722104.tpd	Description:	
Location:	TPW-02-VA-HV-19370 : 1264		
Class:	VALVOLA		
Sub Class:	VALVOLA MANUALE		
Asset Name:	**1264**	**Asset Tag:**	**1264**

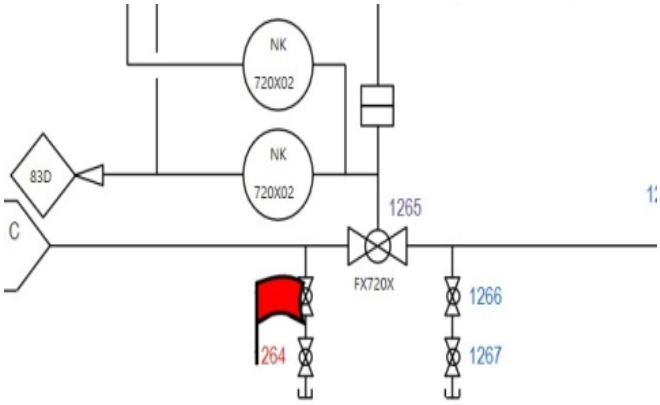

Measurement Data

Stream:	CH4	RF 500:	1	☑ Is Leak
Service:	G	RF 10000:	1	☑ Need Repair
Detect. Equipment:	TVA-FIDC / HGX-3	Leak Def.:	1000	
Calibration Medium:	METANO	Tag Def.:	100	
Calculation Method:	CORR	Repair Def.:	10000	

Source Name	PPM	Loss, kg/yr	Status	Date
1264-01-FL_IN-V	10000	92.64	Measured	2022-06-22
1264-02-FL_OUT-V	150	2.25	Measured	2022-06-22
1264-03-SV	2	0.01	Measured	2022-06-22

Maintenance Information

Flange Name	Flanges Qty	Flange Type	Dn	Pn	Gasket Type	InD	OuD	Bolts Qty	Bolt D	Bolt L	Torque, [N-m]	Bolt Material

Repair Number:

REPAIR ORDER

Drawing:	(02)_P12TV1722104.tpd	Description:	
Location:	TPW-02-VA-HV-19342 : 1312		
Class:	VALVOLA		
Sub Class:	VALVOLA MANUALE		
Asset Name:	**1312**	**Asset Tag:**	**1312**

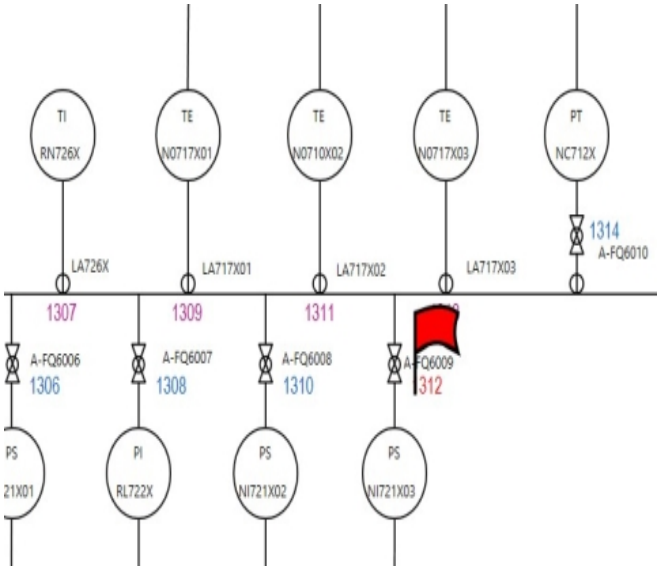

Measurement Data

Stream:	CH4	RF 500:	1	☑ Is Leak
Service:	G	RF 10000:	1	☑ Need Repair
Detect. Equipment:	TVA-FIDC / HGX-3	Leak Def.:	1000	
Calibration Medium:	METANO	Tag Def.:	100	
Calculation Method:	CORR	Repair Def.:	10000	

Source Name	PPM	Loss, kg/yr	Status	Date
1312-01-FL_IN-V	50000	1927.20	Measured	2022-06-22
1312-02-FL_OUT-V	250	3.54	Measured	2022-06-22
1312-03-SV	1300	8.57	Measured	2022-06-22

Maintenance Information

Flange Name	Flanges Qty	Flange Type	Dn	Pn	Gasket Type	InD	OuD	Bolts Qty	Bolt D	Bolt L	Torque, [N-m]	Bolt Material

Repair Number:

REPAIR ORDER

Drawing:	(03)_P12TV02476.tpd	Description:	
Location:	TPW-03-VA-HV-19789 : 1346		
Class:	VALVOLA		
Sub Class:	VALVOLA MANUALE		
Asset Name:	**1346**	**Asset Tag:**	**1346**

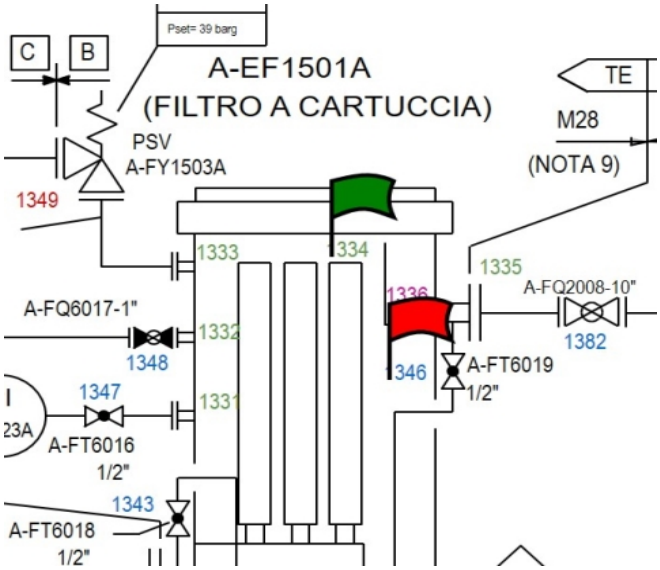

Measurement Data

Stream:	CH4	RF 500:	1	☑ Is Leak
Service:	G	RF 10000:	1	☑ Need Repair
Detect. Equipment:	TVA-FIDC / HGX-3	Leak Def.:	1000	
Calibration Medium:	METANO	Tag Def.:	100	
Calculation Method:	CORR	Repair Def.:	10000	

Source Name	PPM	Loss, kg/yr	Status	Date
1346-01-FL_IN-V	170	2.52	Measured	2022-06-23
1346-02-FL_OUT-V	120	1.85	Measured	2022-06-23
1346-03-SV	30000	132.70	Measured	2022-06-23
1346-04-BN	2	0.01	Measured	2022-06-23
1346-05-BF	1	0.01	Measured	2022-06-23

Maintenance Information

Flange Name	Flanges Qty	Flange Type	Dn	Pn	Gasket Type	InD	OuD	Bolts Qty	Bolt D	Bolt L	Torque, [N-m]	Bolt Material

Repair Number:

REPAIR ORDER

Drawing:	(03)_P12TV02476.tpd	Description:	
Location:	TPW-03-VA-HV-19766 : 1380		
Class:	VALVOLA		
Sub Class:	VALVOLA MANUALE		
Asset Name:	**1380**	**Asset Tag:**	**1380**

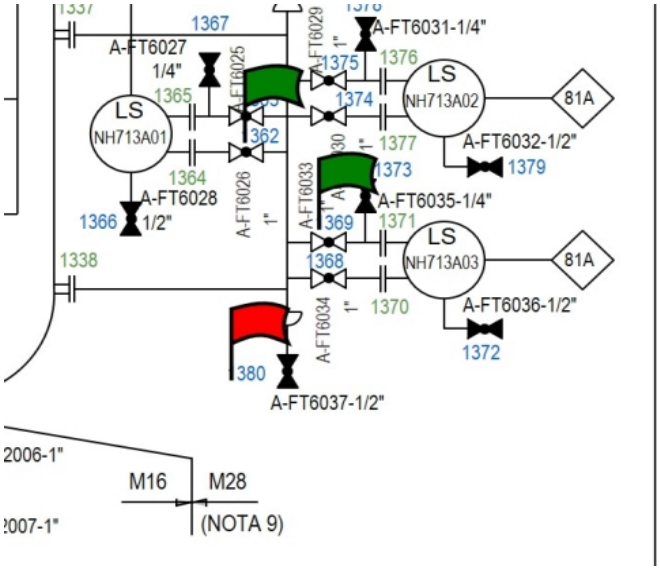

Measurement Data

Stream:	CH4	RF 500:	1	☑ Is Leak
Service:	G	RF 10000:	1	☑ Need Repair
Detect. Equipment:	TVA-FIDC / HGX-3	Leak Def.:	1000	
Calibration Medium:	METANO	Tag Def.:	100	
Calculation Method:	CORR	Repair Def.:	10000	

Source Name	PPM	Loss, kg/yr	Status	Date
1380-01-FL_IN-V	31	0.56	Measured	2022-06-23
1380-02-FL_OUT-V	25	0.46	Measured	2022-06-23
1380-03-SV	20000	93.14	Measured	2022-06-23
1380-04-BN	2	0.01	Measured	2022-06-23
1380-05-BF	6	0.01	Measured	2022-06-23

Maintenance Information

Flange Name	Flanges Qty	Flange Type	Dn	Pn	Gasket Type	InD	OuD	Bolts Qty	Bolt D	Bolt L	Torque, [N-m]	Bolt Material

Repair Number:

REPAIR ORDER

Drawing:	(03)_P12TV02476.tpd	Description:	
Location:	TPW-03-VA-HV-19740 : 1432		
Class:	VALVOLA		
Sub Class:	VALVOLA MANUALE		
Asset Name:	**1432**	**Asset Tag:**	**1432**

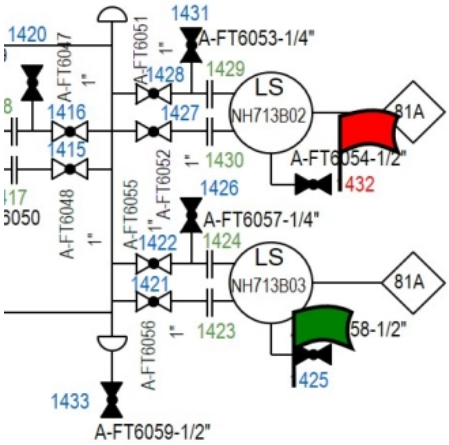

Measurement Data

Stream:	CH4	RF 500:	1	☑ Is Leak
Service:	G	RF 10000:	1	☑ Need Repair
Detect. Equipment:	TVA-FIDC / HGX-3	Leak Def.:	1000	
Calibration Medium:	METANO	Tag Def.:	100	
Calculation Method:	CORR	Repair Def.:	10000	

Source Name	PPM	Loss, kg/yr	Status	Date
1432-01-FL_IN-V	700	8.80	Measured	2022-06-23
1432-02-FL_OUT-V	11000	100.79	Measured	2022-06-23
1432-03-SV	140	1.22	Measured	2022-06-23
1432-04-BN	4	0.01	Measured	2022-06-23
1432-05-BF	2	0.01	Measured	2022-06-23

Maintenance Information

Flange Name	Flanges Qty	Flange Type	Dn	Pn	Gasket Type	InD	OuD	Bolts Qty	Bolt D	Bolt L	Torque, [N-m]	Bolt Material

Repair Number:

REPAIR ORDER

Drawing:	(03)_P12TV02476.tpd	Description:	
Location:	TPW-03-VA-HV-19728 : 1462		
Class:	VALVOLA		
Sub Class:	VALVOLA MANUALE		
Asset Name:	**1462**	**Asset Tag:**	**1462**

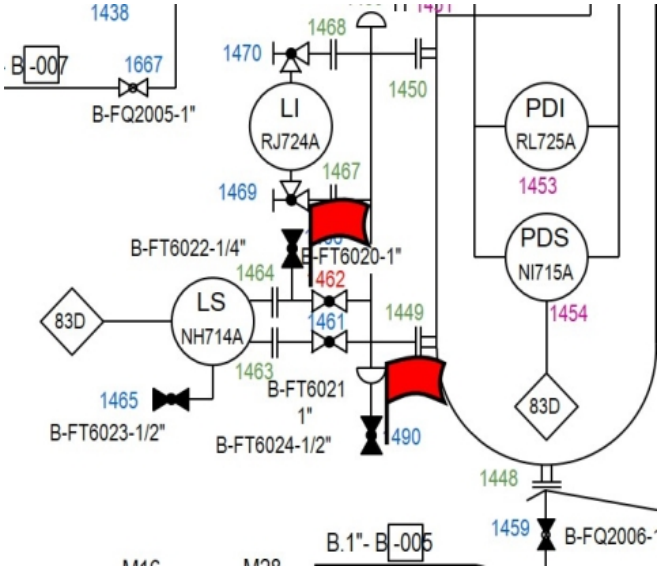

Measurement Data

Stream:	CH4	RF 500:	1	☑ Is Leak
Service:	G	RF 10000:	1	☑ Need Repair
Detect. Equipment:	TVA-FIDC / HGX-3	Leak Def.:	1000	
Calibration Medium:	METANO	Tag Def.:	100	
Calculation Method:	CORR	Repair Def.:	10000	

Source Name	PPM	Loss, kg/yr	Status	Date
1462-01-FL_IN-V	20	0.38	Measured	2022-06-22
1462-02-FL_OUT-V	15	0.29	Measured	2022-06-22
1462-03-SV	50000	963.60	Measured	2022-06-22
1462-04-BN	7	0.01	Measured	2022-06-22
1462-05-BF	2	0.01	Measured	2022-06-22

Maintenance Information

Flange Name	Flanges Qty	Flange Type	Dn	Pn	Gasket Type	InD	OuD	Bolts Qty	Bolt D	Bolt L	Torque, [N-m]	Bolt Material

Repair Number:

REPAIR ORDER

Drawing:	(03)_P12TV02476.tpd	Description:	
Location:	TPW-03-VA-HV-19710 : 1490		
Class:	VALVOLA		
Sub Class:	VALVOLA MANUALE		
Asset Name:	**1490**	**Asset Tag:**	**1490**

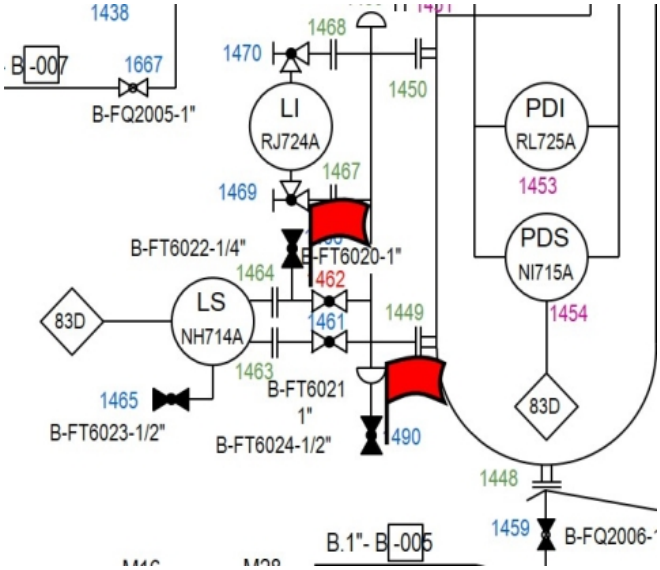

Measurement Data

Stream:	CH4	RF 500:	1	☑ Is Leak
Service:	G	RF 10000:	1	☑ Need Repair
Detect. Equipment:	TVA-FIDC / HGX-3	Leak Def.:	1000	
Calibration Medium:	METANO	Tag Def.:	100	
Calculation Method:	CORR	Repair Def.:	10000	

Source Name	PPM	Loss, kg/yr	Status	Date
1490-01-FL_IN-V	50	0.85	Measured	2022-06-22
1490-02-FL_OUT-V	21	0.40	Measured	2022-06-22
1490-03-SV	11000	55.27	Measured	2022-06-22
1490-04-BN	2	0.01	Measured	2022-06-22
1490-05-BF	7	0.01	Measured	2022-06-22

Maintenance Information

Flange Name	Flanges Qty	Flange Type	Dn	Pn	Gasket Type	InD	OuD	Bolts Qty	Bolt D	Bolt L	Torque, [N-m]	Bolt Material

Repair Number:

REPAIR ORDER

Drawing:	(03)_P12TV02476.tpd	Description:	
Location:	TPW-03-FL-FL-12205 : 1497		
Class:	FLANGE		
Sub Class:	FLANGE		
Asset Name:	**1497**	**Asset Tag:**	**1497**

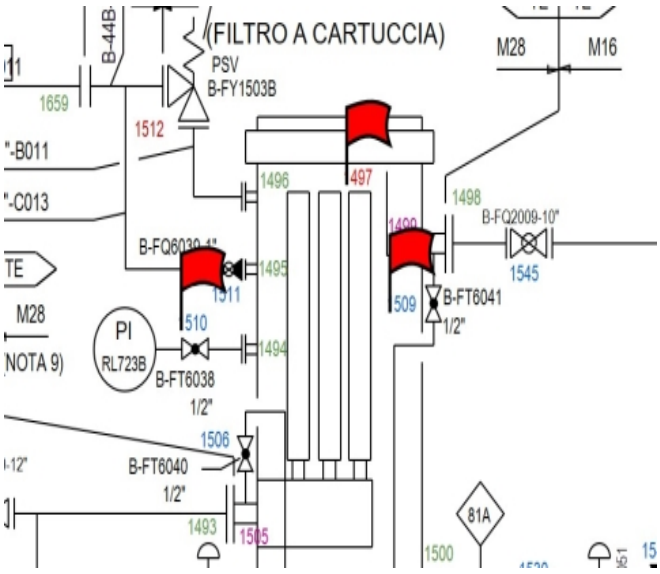

Measurement Data

Stream:	CH4	RF 500:	1	☑ Is Leak
Service:	G	RF 10000:	1	☑ Need Repair
Detect. Equipment:	TVA-FIDC / HGX-3	Leak Def.:	1000	
Calibration Medium:	METANO	Tag Def.:	100	
Calculation Method:	CORR	Repair Def.:	10000	

Source Name	PPM	Loss, kg/yr	Status	Date
1497-01-FL_IN	11000	100.79	Measured	2022-06-22
1497-02-FL_OUT	6700	65.00	Measured	2022-06-22
1497-03-FL_SEAL	350	4.77	Measured	2022-06-22

Maintenance Information

Flange Name	Flanges Qty	Flange Type	Dn	Pn	Gasket Type	InD	OuD	Bolts Qty	Bolt D	Bolt L	Torque, [N-m]	Bolt Material

Repair Number:

REPAIR ORDER

Drawing:	(03)_P12TV02476.tpd	Description:	
Location:	TPW-03-VA-HV-19706 : 1509		
Class:	VALVOLA		
Sub Class:	VALVOLA MANUALE		
Asset Name:	**1509**	**Asset Tag:**	**1509**

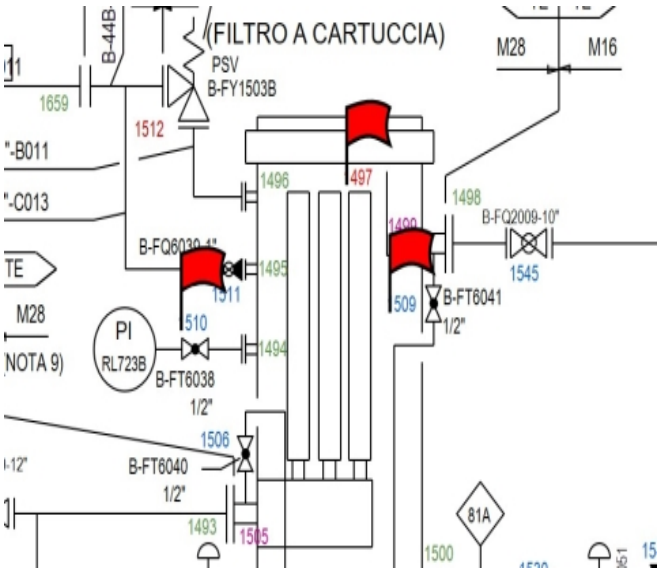

Measurement Data

Stream:	CH4	RF 500:	1	☑ Is Leak
Service:	G	RF 10000:	1	☑ Need Repair
Detect. Equipment:	TVA-FIDC / HGX-3	Leak Def.:	1000	
Calibration Medium:	METANO	Tag Def.:	100	
Calculation Method:	CORR	Repair Def.:	10000	

Source Name	PPM	Loss, kg/yr	Status	Date
1509-01-FL_IN-V	900	11.00	Measured	2022-06-22
1509-02-FL_OUT-V	27	0.49	Measured	2022-06-22
1509-03-SV	11000	55.27	Measured	2022-06-22
1509-04-BN	3	0.01	Measured	2022-06-22
1509-05-BF	7	0.01	Measured	2022-06-22

Maintenance Information

Flange Name	Flanges Qty	Flange Type	Dn	Pn	Gasket Type	InD	OuD	Bolts Qty	Bolt D	Bolt L	Torque, [N-m]	Bolt Material

Repair Number:

REPAIR ORDER

Drawing:	(03)_P12TV02476.tpd	Description:	
Location:	TPW-03-VA-HV-19705 : 1510		
Class:	VALVOLA		
Sub Class:	VALVOLA MANUALE		
Asset Name:	**1510**	**Asset Tag:**	**1510**

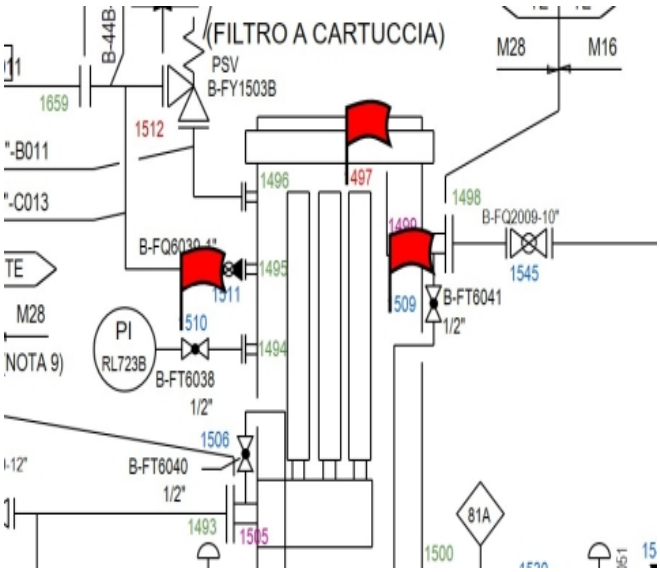

Measurement Data

Stream:	CH4	RF 500:	1	☑ Is Leak
Service:	G	RF 10000:	1	☑ Need Repair
Detect. Equipment:	TVA-FIDC / HGX-3	Leak Def.:	1000	
Calibration Medium:	METANO	Tag Def.:	100	
Calculation Method:	CORR	Repair Def.:	10000	

Source Name	PPM	Loss, kg/yr	Status	Date
1510-01-FL_IN-V	7	0.01	Measured	2022-06-22
1510-02-FL_OUT-V	5	0.01	Measured	2022-06-22
1510-03-SV	50000	963.60	Measured	2022-06-22
1510-04-BN	4	0.01	Measured	2022-06-22
1510-05-BF	6	0.01	Measured	2022-06-22

Maintenance Information

Flange Name	Flanges Qty	Flange Type	Dn	Pn	Gasket Type	InD	OuD	Bolts Qty	Bolt D	Bolt L	Torque, [N-m]	Bolt Material

Repair Number:

REPAIR ORDER

Drawing:	(03)_P12TV02476.tpd	Description:	
Location:	TPW-03-FL-FL-12183 : 1553		
Class:	FLANGE		
Sub Class:	FLANGE		
Asset Name:	**1553**	**Asset Tag:**	**1553**

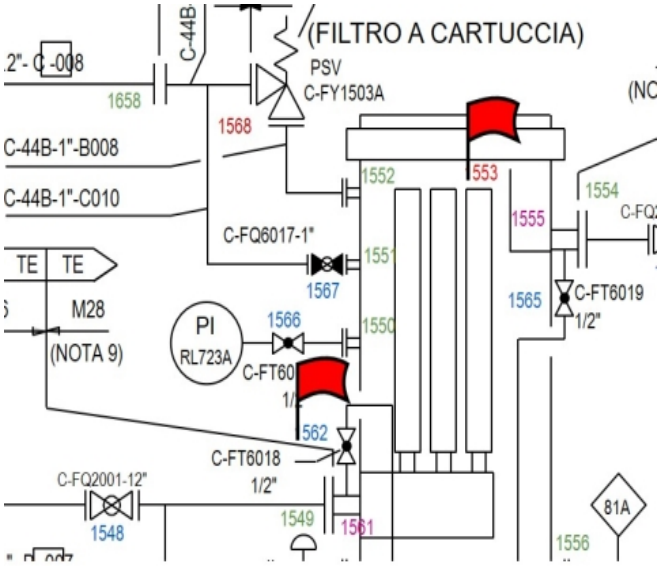

Measurement Data

Stream:	CH4	RF 500:	1	☑ Is Leak
Service:	G	RF 10000:	1	☑ Need Repair
Detect. Equipment:	TVA-FIDC / HGX-3	Leak Def.:	1000	
Calibration Medium:	METANO	Tag Def.:	100	
Calculation Method:	CORR	Repair Def.:	10000	

Source Name	PPM	Loss, kg/yr	Status	Date
1553-01-FL_IN	11000	100.79	Measured	2022-06-22
1553-02-FL_OUT	31	0.56	Measured	2022-06-22
1553-03-FL_SEAL	22	0.41	Measured	2022-06-22

Maintenance Information

Flange Name	Flanges Qty	Flange Type	Dn	Pn	Gasket Type	InD	OuD	Bolts Qty	Bolt D	Bolt L	Torque, [N-m]	Bolt Material

Repair Number:

REPAIR ORDER

Drawing:	(03)_P12TV02476.tpd	Description:	
Location:	TPW-03-VA-HV-19679 : 1562		
Class:	VALVOLA		
Sub Class:	VALVOLA MANUALE		
Asset Name:	**1562**	**Asset Tag:**	**1562**

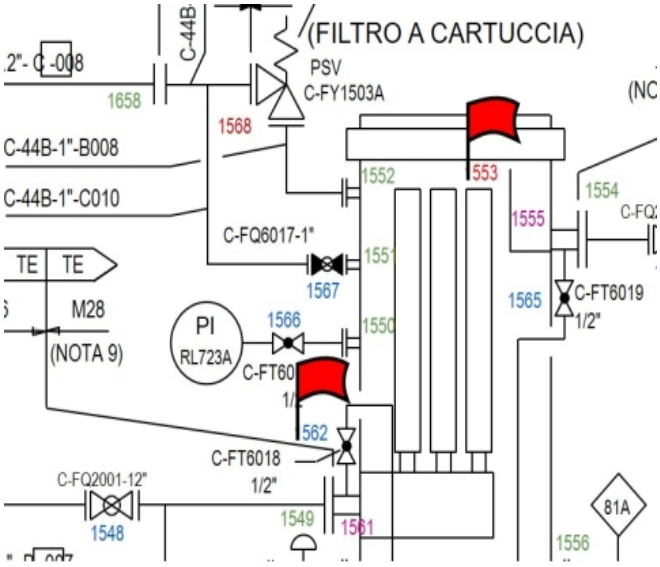

Measurement Data

Stream:	CH4	RF 500:	1	☑ Is Leak
Service:	G	RF 10000:	1	☑ Need Repair
Detect. Equipment:	TVA-FIDC / HGX-3	Leak Def.:	1000	
Calibration Medium:	METANO	Tag Def.:	100	
Calculation Method:	CORR	Repair Def.:	10000	

Source Name	PPM	Loss, kg/yr	Status	Date
1562-01-FL_IN-V	15	0.29	Measured	2022-06-22
1562-02-FL_OUT-V	13	0.26	Measured	2022-06-22
1562-03-SV	12000	59.63	Measured	2022-06-22
1562-04-BN	18	0.20	Measured	2022-06-22
1562-05-BF	2	0.01	Measured	2022-06-22

Maintenance Information

Flange Name	Flanges Qty	Flange Type	Dn	Pn	Gasket Type	InD	OuD	Bolts Qty	Bolt D	Bolt L	Torque, [N-m]	Bolt Material

Repair Number:

REPAIR ORDER

Drawing:	(03)_P12TV02476.tpd	Description:	
Location:	TPW-03-VA-HV-19638 : 1636		
Class:	VALVOLA		
Sub Class:	VALVOLA MANUALE		
Asset Name:	**1636**	**Asset Tag:**	**1636**

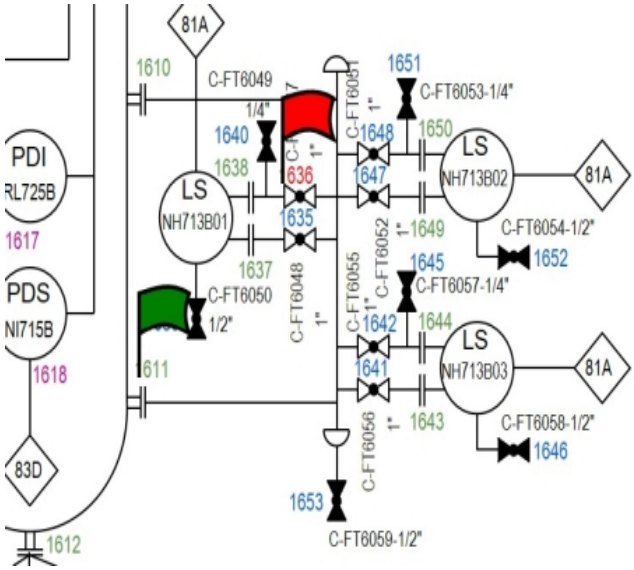

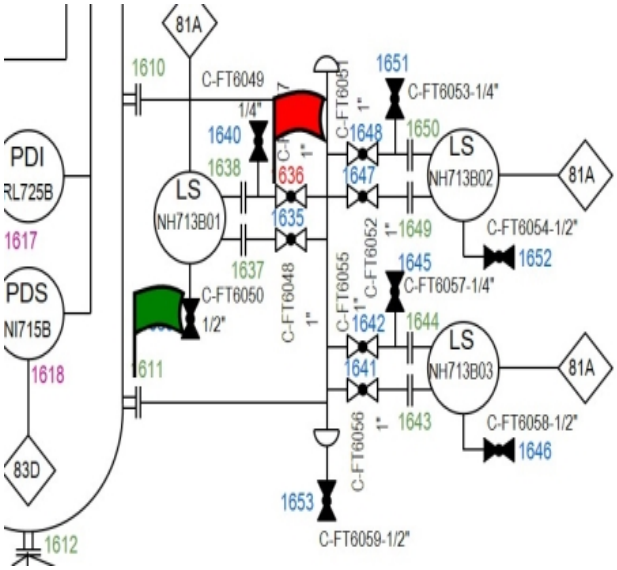

Measurement Data

Stream:	CH4	RF 500:	1	☑ Is Leak
Service:	G	RF 10000:	1	☑ Need Repair
Detect. Equipment:	TVA-FIDC / HGX-3	Leak Def.:	1000	
Calibration Medium:	METANO	Tag Def.:	100	
Calculation Method:	CORR	Repair Def.:	10000	

Source Name	PPM	Loss, kg/yr	Status	Date
1636-01-FL_IN-V	11000	100.79	Measured	2022-06-22
1636-02-FL_OUT-V	30	0.54	Measured	2022-06-22
1636-03-SV	31	0.33	Measured	2022-06-22
1636-04-BN	5	0.01	Measured	2022-06-22
1636-05-BF	2	0.01	Measured	2022-06-22

Maintenance Information

Flange Name	Flanges Qty	Flange Type	Dn	Pn	Gasket Type	InD	OuD	Bolts Qty	Bolt D	Bolt L	Torque, [N-m]	Bolt Material

Repair Number:

REPAIR ORDER

Drawing:	(03)_P12TV02476.tpd	Description:	
Location:	TPW-03-CN-CN-03485 : 1677		
Class:	CONNETTORI		
Sub Class:	CONNETTORI		
Asset Name:	**1677**	**Asset Tag:**	**1677**

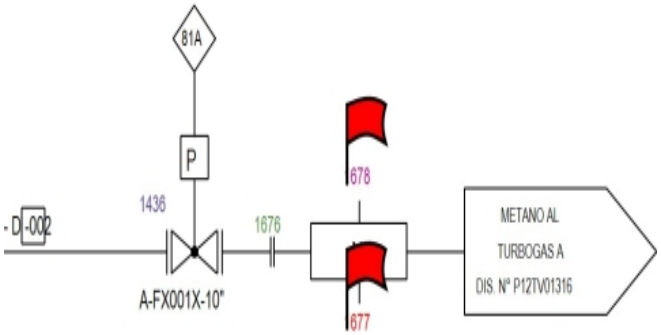

Measurement Data

Stream:	CH4	RF 500:	1	☑ Is Leak
Service:	G	RF 10000:	1	☑ Need Repair
Detect. Equipment:	TVA-FIDC / HGX-3	Leak Def.:	1000	
Calibration Medium:	METANO	Tag Def.:	100	
Calculation Method:	CORR	Repair Def.:	10000	

Source Name	PPM	Loss, kg/yr	Status	Date
1677-01-CN_IN	12	0.24	Measured	2022-06-23
1677-02-CN_OUT1	13	0.26	Measured	2022-06-23
1677-03-CN_OUT2	50000	1927.20	Measured	2022-06-23
1677-04-OTHERS-C	18	0.34	Measured	2022-06-23

Maintenance Information

Flange Name	Flanges Qty	Flange Type	Dn	Pn	Gasket Type	InD	OuD	Bolts Qty	Bolt D	Bolt L	Torque, [N-m]	Bolt Material

Repair Number:

REPAIR ORDER

Drawing:	(03)_P12TV02476.tpd	Description:	
Location:	TPW-03-CN-CN-03484 : 1678		
Class:	CONNETTORI		
Sub Class:	CONNETTORI		
Asset Name:	**1678**	**Asset Tag:**	**1678**

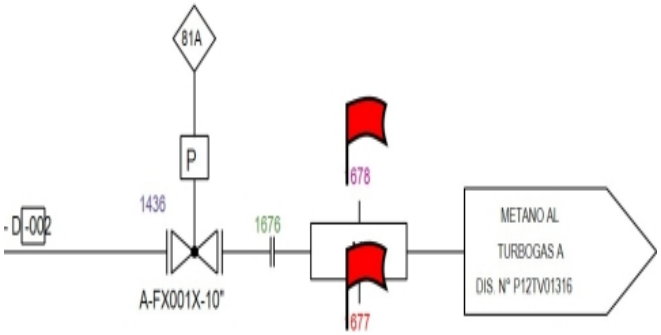

Measurement Data

Stream:	CH4	RF 500:	1	☑ Is Leak
Service:	G	RF 10000:	1	☑ Need Repair
Detect. Equipment:	TVA-FIDC / HGX-3	Leak Def.:	1000	
Calibration Medium:	METANO	Tag Def.:	100	
Calculation Method:	CORR	Repair Def.:	10000	

Source Name	PPM	Loss, kg/yr	Status	Date
1678-01-CN_IN	21	0.40	Measured	2022-06-23
1678-02-CN_OUT1	9	0.03	Measured	2022-06-23
1678-03-CN_OUT2	11000	100.79	Measured	2022-06-23
1678-04-OTHERS-C	15	0.29	Measured	2022-06-23

Maintenance Information

Flange Name	Flanges Qty	Flange Type	Dn	Pn	Gasket Type	InD	OuD	Bolts Qty	Bolt D	Bolt L	Torque, [N-m]	Bolt Material

Repair Number:

REPAIR ORDER

Drawing:	(03)_P12TV02476.tpd	Description:	
Location:	TPW-03-CN-CN-03483 : 1680		
Class:	CONNETTORI		
Sub Class:	CONNETTORI		
Asset Name:	**1680**	**Asset Tag:**	**1680**

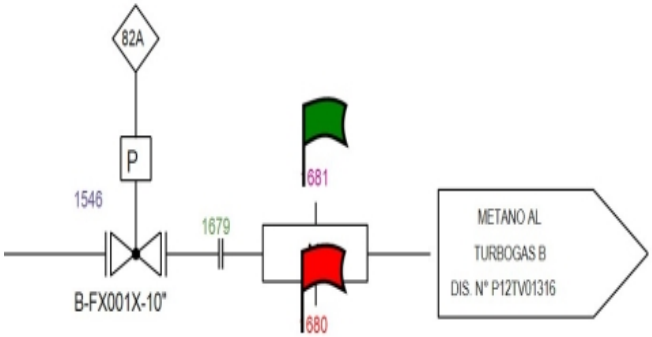

Measurement Data

Stream:	CH4	RF 500:	1	☑ Is Leak
Service:	G	RF 10000:	1	☑ Need Repair
Detect. Equipment:	TVA-FIDC / HGX-3	Leak Def.:	1000	
Calibration Medium:	METANO	Tag Def.:	100	
Calculation Method:	CORR	Repair Def.:	10000	

Source Name	PPM	Loss, kg/yr	Status	Date
1680-01-CN_IN	23	0.43	Measured	2022-06-23
1680-02-CN_OUT1	10	0.21	Measured	2022-06-23
1680-03-CN_OUT2	12000	108.86	Measured	2022-06-23
1680-04-OTHERS-C	9	0.03	Measured	2022-06-23

Maintenance Information

Flange Name	Flanges Qty	Flange Type	Dn	Pn	Gasket Type	InD	OuD	Bolts Qty	Bolt D	Bolt L	Torque, [N-m]	Bolt Material

ORION S.r.l.

A: Via A. Volta, 25/b - 35030 Veggiano (PD) - Italy
P: +39 049 9006.911 - **F:** +39 049 9006939
E: info@orion-srl.it - **W:** www.orion-srl.it

4 ALLEGATI TABULARI

- **Tab.1: Totale Punti Emittenti/Classe e Punto di Emissione Componenti**

La tabella seguente riporta il quantitativo di Punti suddivisi per Classe e per tipologia.
Si evince da tale tabella che la colonna denominata " N° Totale di Punti con emissione Superiore alla soglia di Attenzione" raggruppa entrambe soglie, sia quella di Attenzione sia quella di Perdita.

- **Tab.2: Kg/anno Punti Emittenti/Classe e Punti di Misura Componenti**

La tabella seguente riporta il quantitativo di Punti suddivisi per Classe e per tipologia, la quantità di emissione espressa in Kg/anno dei punti non raggiungibili e il Totale di emissione.

- **Tab.3: Kg/anno Punti Emittenti/ Classe e Punti di Misura Componenti**

La tabella seguente riporta il quantitativo di Punti suddivisi per Classe e per tipologia, la quantità di emissione espressa in Kg/anno dei punti non raggiungibili, il Totale di emissione, e la suddivisione con numero sorgenti e quantità emissione per entrambe le due soglie.

Emissioni fuggitive:
Totale Punti Emittenti/Classe e Punto di Emissionie Componenti

Calculation method : Correlation Socmi

Progetto: **TIRRENO POWER_TORREVALDALIGA_ Campagna 2022**

		N° Totale Punti	N° Totale Punti Non Raggiungibili	N° Totale Punti Coibentati	N° Totale Punti Non Sicuri	0 - 8 ppm	9 - 99 ppm	100 - 499 ppm	500 - 9999 ppm	10000 - 49999 ppm	> 49999 ppm	N° Totale di Punti con emissione Superiore alla Soglia di Attenzione
APPARECCHIATURE - Source 1 - VALVOLA IN		**17**				**13**	**3**		**1**			**1**
CH4	G	17				13	3		1			1
APPARECCHIATURE - Source 2 - VALVOLA OUT		**17**				**13**	**2**	**2**				
CH4	G	17				13	2	2				
APPARECCHIATURE - Source 3 - BYPASS		**7**				**6**	**1**					
CH4	G	7				6	1					
APPARECCHIATURE - Source 3 - CORPO		**10**				**7**			**3**			**3**
CH4	G	10				7			3			3
APPARECCHIATURE - Source 4 - SPURGO		**16**				**13**	**3**					
CH4	G	16				13	3					
APPARECCHIATURE - Source 5 - SFIATO		**15**				**14**	**1**					
CH4	G	15				14	1					
APPARECCHIATURE - Source 6 - ALTRO		**15**				**13**		**1**			**1**	**1**
CH4	G	15				13		1			1	1
CONNETTORE - Source 1 - CONNETTORE IN		**68**		**4**		**37**	**15**	**7**	**5**			**4**
CH4	G	68		4		37	15	7	5		1	4
CONNETTORE - Source 2 - CONNETTORE OUT 1		**65**				**44**	**15**	**3**	**2**	**1**		**3**
CH4	G	65				44	15	3	2	1	1	3
CONNETTORE - Source 3 - CONNETTORE OUT 2		**65**				**48**	**8**	**3**	**3**	**2**	**1**	**6**
CH4	G	65				48	8	3	3	2	2	6
CONNETTORE - Source 4 - ALTRO CONNETTORE		**22**				**8**	**8**	**4**	**2**			
CH4	G	22				8	8	4	2		2	
FINE LINEA - Source 1 - FINE LINEA		**4**				**4**						
CH4	G	4				4					2	
FLANGIA - Source 1 - FLANGIA IN		**180**	**7**	**13**		**92**	**44**	**15**	**7**	**2**		**6**
CH4	G	180	7	13		92	44	15	7	2	2	6
FLANGIA - Source 2 - FLANGIA OUT		**159**				**137**	**21**		**1**			**1**
CH4	G	159				137	21		1		2	1
FLANGIA - Source 3 - CORPO FLANGIA		**159**				**142**	**15**	**1**	**1**			**1**
CH4	G	159				142	15	1	1		2	1
VALVOLA - Source 1 - FLANGIA IN		**372**		**2**		**225**	**95**	**28**	**17**	**4**	**1**	**16**
CH4	G	372		2		225	95	28	17	4	3	16
VALVOLA - Source 2 - FLANGIA OUT		**372**				**250**	**82**	**25**	**12**	**2**	**1**	**12**
CH4	G	372				250	82	25	12	2	4	12
VALVOLA - Source 3 - PREMISTOPPA		**371**		**2**		**290**	**48**	**12**	**10**	**7**	**2**	**15**
CH4	G	371		2		290	48	12	10	7	6	15
VALVOLA - Source 4 - GUARNIZIONE A CAPPELLO		**350**	**4**	**2**		**331**	**10**	**1**	**2**			
CH4	G	350	4	2		331	10	1	2		6	
VALVOLA - Source 5 - FLANGIA A FONDELLO		**331**				**326**	**4**	**1**				
CH4	G	331				326	4	1			6	
VALVOLA - Source 6 - ALTRO		**28**				**24**	**3**			**1**		**1**
CH4	G	28				24	3			1	6	1
	Totali:	**2643**	**11**	**23**		**2.037**	**378**	**103**	**66**	**19**	**6**	**70**

Emissioni fuggitive:
Kg/anno Punti di Emisisone / Classe e Punti di Misura Componenti
con Suddivisione Soglie e Relative Perdite
Calculation method : Correlation Socmi

Progetto: **TIRRENO POWER_TORREVALDALIGA_Campagna 2022**

		Totale Punti	Kg/anno Punti Non Raggiungibili	Kg/anno Punti Coibentati	Kg/anno Punti Non Sicuri	EMISSIONI IN KG/ANNO 0 - 8 ppm	9 - 99 ppm	100 - 499 ppm	500 - 9999 ppm	10000 - 49999 ppm	> 49999 ppm	Kg/anno Totali Sorgenti
APPARECCHIATURE - Source 1 - VALVOLA IN		**17**	**0,00**	**0,00**	**0,00**	**0,08**	**1,00**	**0,00**	**6,81**	**0,00**	**0,0**	**7,89**
CH4	G	17	0,00	0,00	0,00	0,08	1,00	0,00	6,81	0,00	0,0	7,89
APPARECCHIATURE - Source 2 - VALVOLA OUT		**17**	**0,00**	**0,00**	**0,00**	**0,08**	**0,32**	**3,97**	**0,00**	**0,00**	**0,0**	**4,37**
CH4	G	17	0,00	0,00	0,00	0,08	0,32	3,97	0,00	0,00	0,0	4,37
APPARECCHIATURE - Source 3 - BYPASS		**7**	**0,00**	**0,00**	**0,00**	**0,03**	**0,22**	**0,00**	**0,00**	**0,00**	**0,0**	**0,26**
CH4	G	7	0,00	0,00	0,00	0,03	0,22	0,00	0,00	0,00	0,0	0,26
APPARECCHIATURE - Source 3 - CORPO		**10**	**0,00**	**0,00**	**0,00**	**0,04**	**0,00**	**0,00**	**81,77**	**0,00**	**0,0**	**81,81**
CH4	G	10	0,00	0,00	0,00	0,04	0,00	0,00	81,77	0,00	0,0	81,81
APPARECCHIATURE - Source 4 - SPURGO		**16**	**0,00**	**0,00**	**0,00**	**0,08**	**1,11**	**0,00**	**0,00**	**0,00**	**0,0**	**1,19**
CH4	G	16	0,00	0,00	0,00	0,08	1,11	0,00	0,00	0,00	0,0	1,19
APPARECCHIATURE - Source 5 - SFIATO		**15**	**0,00**	**0,00**	**0,00**	**0,08**	**0,75**	**0,00**	**0,00**	**0,00**	**0,0**	**0,83**
CH4	G	15	0,00	0,00	0,00	0,08	0,75	0,00	0,00	0,00	0,0	0,83
APPARECCHIATURE - Source 6 - ALTRO		**15**	**0,00**	**0,00**	**0,00**	**0,07**	**0,00**	**2,91**	**0,00**	**0,00**	**1.927,2**	**1.930,17**
CH4	G	15	0,00	0,00	0,00	0,07	0,00	2,91	0,00	0,00	1.927,2	1.930,17
CONNETTORE - Source 1 - CONNETTORE IN		**68**	**0,00**	**64,12**	**0,00**	**0,20**	**9,83**	**16,65**	**72,91**	**0,00**	**0,0**	**163,72**
CH4	G	68	0,00	64,12	0,00	0,20	9,83	16,65	72,91	0,00	0,0	163,72
CONNETTORE - Source 2 - CONNETTORE OUT 1		**65**	**0,00**	**0,00**	**0,00**	**0,24**	**6,87**	**6,73**	**44,45**	**186,14**	**0,0**	**244,43**
CH4	G	65	0,00	0,00	0,00	0,24	6,87	6,73	44,45	186,14	0,0	244,43
CONNETTORE - Source 3 - CONNETTORE OUT 2		**65**	**0,00**	**0,00**	**0,00**	**0,26**	**5,69**	**6,53**	**134,34**	**209,66**	**1.927,2**	**2.283,67**
CH4	G	65	0,00	0,00	0,00	0,26	5,69	6,53	134,34	209,66	1.927,2	2.283,67
CONNETTORE - Source 4 - ALTRO CONNETTORE		**22**	**0,00**	**0,00**	**0,00**	**0,04**	**4,18**	**9,18**	**13,76**	**0,00**	**0,0**	**27,17**
CH4	G	22	0,00	0,00	0,00	0,04	4,18	9,18	13,76	0,00	0,0	27,17
FINE LINEA - Source 1 - FINE LINEA		**4**	**0,00**	**0,00**	**0,00**	**0,02**	**0,00**	**0,00**	**0,00**	**0,00**	**0,0**	**0,02**
CH4	G	4	0,00	0,00	0,00	0,02	0,00	0,00	0,00	0,00	0,0	0,02
FLANGIA - Source 1 - FLANGIA IN		**180**	**112,22**	**208,40**	**0,00**	**0,49**	**32,60**	**42,14**	**117,18**	**201,59**	**0,0**	**714,62**
CH4	G	180	112,22	208,40	0,00	0,49	32,60	42,14	117,18	201,59	0,0	714,62
FLANGIA - Source 2 - FLANGIA OUT		**159**	**0,00**	**0,00**	**0,00**	**0,73**	**7,21**	**0,00**	**65,00**	**0,00**	**0,0**	**72,93**
CH4	G	159	0,00	0,00	0,00	0,73	7,21	0,00	65,00	0,00	0,0	72,93
FLANGIA - Source 3 - CORPO FLANGIA		**159**	**0,00**	**0,00**	**0,00**	**0,76**	**5,73**	**4,77**	**14,19**	**0,00**	**0,0**	**25,44**
CH4	G	159	0,00	0,00	0,00	0,76	5,73	4,77	14,19	0,00	0,0	25,44
VALVOLA - Source 1 - FLANGIA IN		**372**	**0,00**	**32,06**	**0,00**	**1,20**	**50,69**	**77,66**	**264,40**	**378,72**	**1.927,2**	**2.731,93**
CH4	G	372	0,00	32,06	0,00	1,20	50,69	77,66	264,40	378,72	1.927,2	2.731,93
VALVOLA - Source 2 - FLANGIA OUT		**372**	**0,00**	**0,00**	**0,00**	**1,34**	**49,28**	**63,59**	**253,94**	**193,44**	**1.927,2**	**2.488,78**
CH4	G	372	0,00	0,00	0,00	1,34	49,28	63,59	253,94	193,44	1.927,2	2.488,78
VALVOLA - Source 3 - PREMISTOPPA		**371**	**0,00**	**104,59**	**0,00**	**1,68**	**15,49**	**19,96**	**145,33**	**502,14**	**1.927,2**	**2.716,40**
CH4	G	371	0,00	104,59	0,00	1,68	15,49	19,96	145,33	502,14	1.927,2	2.716,40
VALVOLA - Source 4 - GUARNIZIONE A CAPPELLO		**350**	**209,19**	**104,59**	**0,00**	**1,91**	**3,41**	**1,67**	**9,98**	**0,00**	**0,0**	**330,76**
CH4	G	350	209,19	104,59	0,00	1,91	3,41	1,67	9,98	0,00	0,0	330,76
VALVOLA - Source 5 - FLANGIA A FONDELLO		**331**	**0,00**	**0,00**	**0,00**	**1,74**	**2,12**	**5,37**	**0,00**	**0,00**	**0,0**	**9,22**
CH4	G	331	0,00	0,00	0,00	1,74	2,12	5,37	0,00	0,00	0,0	9,22
VALVOLA - Source 6 - ALTRO		**28**	**0,00**	**0,00**	**0,00**	**0,13**	**0,66**	**0,00**	**0,00**	**92,64**	**0,0**	**93,43**
CH4	G	28	0,00	0,00	0,00	0,13	0,66	0,00	0,00	92,64	0,0	93,43
	Totali:	**2643**	**321**	**514**		**11**	**197**	**261**	**1.224**	**1.764**	**9.636**	**13.929**

Emissioni fuggitive:
Kg/anno Punti di Emisisone / Classe e Punti di Misura Componenti
con Suddivisione Soglie e Relative Perdite
Calculation method : Correlation Socmi

Progetto: **TIRRENO POWER_TORREVALDALIGA_Campagna 2022**

EMISSIONI IN KG/ANNO

		Totale Punti	Kg/anno Punti Non Raggiungibili	Kg/anno Punti Coibentati	Kg/anno Punti Non Sicuri	0 - 8 ppm	9 - 99 ppm	100 - 499 ppm	500 - 9999 ppm	10000 - 49999 ppm	> 49999 ppm	Kg/anno Totali Sorgenti	> Soglia Attenzione		> Soglia Perdita	
													Quantità	Kg/Anno	Quantità	Kg/Anno
APPARECCHIATURE - Source 1 - VALVOLA IN		**17**	**0,00**	**0,00**	**0,00**	**0,08**	**1,00**	**0,00**	**6,81**	**0,00**	**0,0**	**7,89**	**1**	**6,81**	**0**	**0,00**
CH4	G	17	0,00	0,00	0,00	0,08	1,00	0,00	6,81	0,00	0,0	7,89	1	6,81	0	0,00
APPARECCHIATURE - Source 2 - VALVOLA OUT		**17**	**0,00**	**0,00**	**0,00**	**0,08**	**0,32**	**3,97**	**0,00**	**0,00**	**0,0**	**4,37**	**0**	**0,00**	**0**	**0,00**
CH4	G	17	0,00	0,00	0,00	0,08	0,32	3,97	0,00	0,00	0,0	4,37	0	0,00	0	0,00
APPARECCHIATURE - Source 3 - BYPASS		**7**	**0,00**	**0,00**	**0,00**	**0,03**	**0,22**	**0,00**	**0,00**	**0,00**	**0,0**	**0,26**	**0**	**0,00**	**0**	**0,00**
CH4	G	7	0,00	0,00	0,00	0,03	0,22	0,00	0,00	0,00	0,0	0,26	0	0,00	0	0,00
APPARECCHIATURE - Source 3 - CORPO		**10**	**0,00**	**0,00**	**0,00**	**0,04**	**0,00**	**0,00**	**81,77**	**0,00**	**0,0**	**81,81**	**3**	**81,77**	**0**	**0,00**
CH4	G	10	0,00	0,00	0,00	0,04	0,00	0,00	81,77	0,00	0,0	81,81	3	81,77	0	0,00
APPARECCHIATURE - Source 4 - SPURGO		**16**	**0,00**	**0,00**	**0,00**	**0,08**	**1,11**	**0,00**	**0,00**	**0,00**	**0,0**	**1,19**	**0**	**0,00**	**0**	**0,00**
CH4	G	16	0,00	0,00	0,00	0,08	1,11	0,00	0,00	0,00	0,0	1,19	0	0,00	0	0,00
APPARECCHIATURE - Source 5 - SFIATO		**15**	**0,00**	**0,00**	**0,00**	**0,08**	**0,75**	**0,00**	**0,00**	**0,00**	**0,0**	**0,83**	**0**	**0,00**	**0**	**0,00**
CH4	G	15	0,00	0,00	0,00	0,08	0,75	0,00	0,00	0,00	0,0	0,83	0	0,00	0	0,00
APPARECCHIATURE - Source 6 - ALTRO		**15**	**0,00**	**0,00**	**0,00**	**0,07**	**0,00**	**2,91**	**0,00**	**0,00**	**1.927,2**	**1.930,17**	**1**	**1.927,20**	**1**	**1.927,20**
CH4	G	15	0,00	0,00	0,00	0,07	0,00	2,91	0,00	0,00	1.927,2	1.930,17	1	1.927,20	1	1.927,20
CONNETTORE - Source 1 - CONNETTORE IN		**68**	**0,00**	**64,12**	**0,00**	**0,20**	**9,83**	**16,65**	**72,91**	**0,00**	**0,0**	**163,72**	**4**	**61,92**	**0**	**0,00**
CH4	G	68	0,00	64,12	0,00	0,20	9,83	16,65	72,91	0,00	0,0	163,72	4	61,92	0	0,00
CONNETTORE - Source 2 - CONNETTORE OUT 1		**65**	**0,00**	**0,00**	**0,00**	**0,24**	**6,87**	**6,73**	**44,45**	**186,14**	**0,0**	**244,43**	**3**	**230,59**	**1**	**186,14**
CH4	G	65	0,00	0,00	0,00	0,24	6,87	6,73	44,45	186,14	0,0	244,43	3	230,59	1	186,14
CONNETTORE - Source 3 - CONNETTORE OUT 2		**65**	**0,00**	**0,00**	**0,00**	**0,26**	**5,69**	**6,53**	**134,34**	**209,66**	**1.927,2**	**2.283,67**	**6**	**2.271,20**	**3**	**2.136,86**
CH4	G	65	0,00	0,00	0,00	0,26	5,69	6,53	134,34	209,66	1.927,2	2.283,67	6	2.271,20	3	2.136,86
CONNETTORE - Source 4 - ALTRO CONNETTORE		**22**	**0,00**	**0,00**	**0,00**	**0,04**	**4,18**	**9,18**	**13,76**	**0,00**	**0,0**	**27,17**	**0**	**0,00**	**0**	**0,00**
CH4	G	22	0,00	0,00	0,00	0,04	4,18	9,18	13,76	0,00	0,0	27,17	0	0,00	0	0,00
FINE LINEA - Source 1 - FINE LINEA		**4**	**0,00**	**0,00**	**0,00**	**0,02**	**0,00**	**0,00**	**0,00**	**0,00**	**0,0**	**0,02**	**0**	**0,00**	**0**	**0,00**
CH4	G	4	0,00	0,00	0,00	0,02	0,00	0,00	0,00	0,00	0,0	0,02	0	0,00	0	0,00
FLANGIA - Source 1 - FLANGIA IN		**180**	**112,22**	**208,40**	**0,00**	**0,49**	**32,60**	**42,14**	**117,18**	**201,59**	**0,0**	**714,62**	**6**	**298,45**	**2**	**201,59**
CH4	G	180	112,22	208,40	0,00	0,49	32,60	42,14	117,18	201,59	0,0	714,62	6	298,45	2	201,59
FLANGIA - Source 2 - FLANGIA OUT		**159**	**0,00**	**0,00**	**0,00**	**0,73**	**7,21**	**0,00**	**65,00**	**0,00**	**0,0**	**72,93**	**1**	**65,00**	**0**	**0,00**
CH4	G	159	0,00	0,00	0,00	0,73	7,21	0,00	65,00	0,00	0,0	72,93	1	65,00	0	0,00
FLANGIA - Source 3 - CORPO FLANGIA		**159**	**0,00**	**0,00**	**0,00**	**0,76**	**5,73**	**4,77**	**14,19**	**0,00**	**0,0**	**25,44**	**1**	**14,19**	**0**	**0,00**
CH4	G	159	0,00	0,00	0,00	0,76	5,73	4,77	14,19	0,00	0,0	25,44	1	14,19	0	0,00
VALVOLA - Source 1 - FLANGIA IN		**372**	**0,00**	**32,06**	**0,00**	**1,20**	**50,69**	**77,66**	**264,40**	**378,72**	**1.927,2**	**2.731,93**	**16**	**2.516,47**	**5**	**2.305,92**
CH4	G	372	0,00	32,06	0,00	1,20	50,69	77,66	264,40	378,72	1.927,2	2.731,93	16	2.516,47	5	2.305,92
VALVOLA - Source 2 - FLANGIA OUT		**372**	**0,00**	**0,00**	**0,00**	**1,34**	**49,28**	**63,59**	**253,94**	**193,44**	**1.927,2**	**2.488,78**	**12**	**2.348,63**	**3**	**2.120,64**
CH4	G	372	0,00	0,00	0,00	1,34	49,28	63,59	253,94	193,44	1.927,2	2.488,78	12	2.348,63	3	2.120,64
VALVOLA - Source 3 - PREMISTOPPA		**371**	**0,00**	**104,59**	**0,00**	**1,68**	**15,49**	**19,96**	**145,33**	**502,14**	**1.927,2**	**2.716,40**	**15**	**2.553,48**	**9**	**2.429,34**
CH4	G	371	0,00	104,59	0,00	1,68	15,49	19,96	145,33	502,14	1.927,2	2.716,40	15	2.553,48	9	2.429,34
VALVOLA - Source 4 - GUARNIZIONE A CAPPELLO		**350**	**209,19**	**104,59**	**0,00**	**1,91**	**3,41**	**1,67**	**9,98**	**0,00**	**0,0**	**330,76**	**0**	**0,00**	**0**	**0,00**
CH4	G	350	209,19	104,59	0,00	1,91	3,41	1,67	9,98	0,00	0,0	330,76	0	0,00	0	0,00
VALVOLA - Source 5 - FLANGIA A FONDELLO		**331**	**0,00**	**0,00**	**0,00**	**1,74**	**2,12**	**5,37**	**0,00**	**0,00**	**0,0**	**9,22**	**0**	**0,00**	**0**	**0,00**
CH4	G	331	0,00	0,00	0,00	1,74	2,12	5,37	0,00	0,00	0,0	9,22	0	0,00	0	0,00
VALVOLA - Source 6 - ALTRO		**28**	**0,00**	**0,00**	**0,00**	**0,13**	**0,66**	**0,00**	**0,00**	**92,64**	**0,0**	**93,43**	**1**	**92,64**	**1**	**92,64**
CH4	G	28	0,00	0,00	0,00	0,13	0,66	0,00	0,00	92,64	0,0	93,43	1	92,64	1	92,64
	Totali:	**2.643**	**321**	**514**		**11**	**197**	**261**	**1.224**	**1.764**	**9.636**	**13.929**	**70**	**12.468**	**25**	**11.400**

5 ALLEGATI GRAFICI

- **Grafico Nr. 1**

Il grafico rappresenta la quantità delle sorgenti emittenti singola classe tipologica dei componenti d'impianto.

- **Grafico Nr. 2**

Il grafico rappresenta la perdita in Kg/anno per singola classe tipologica dei componenti d'impianto.

- **Grafico Nr. 3**

Il grafico rappresenta la perdita in Kg/anno per singola classe tipologica dei componenti d'impianto, con il relativo numero di punti che concorrono alla relativa portata.

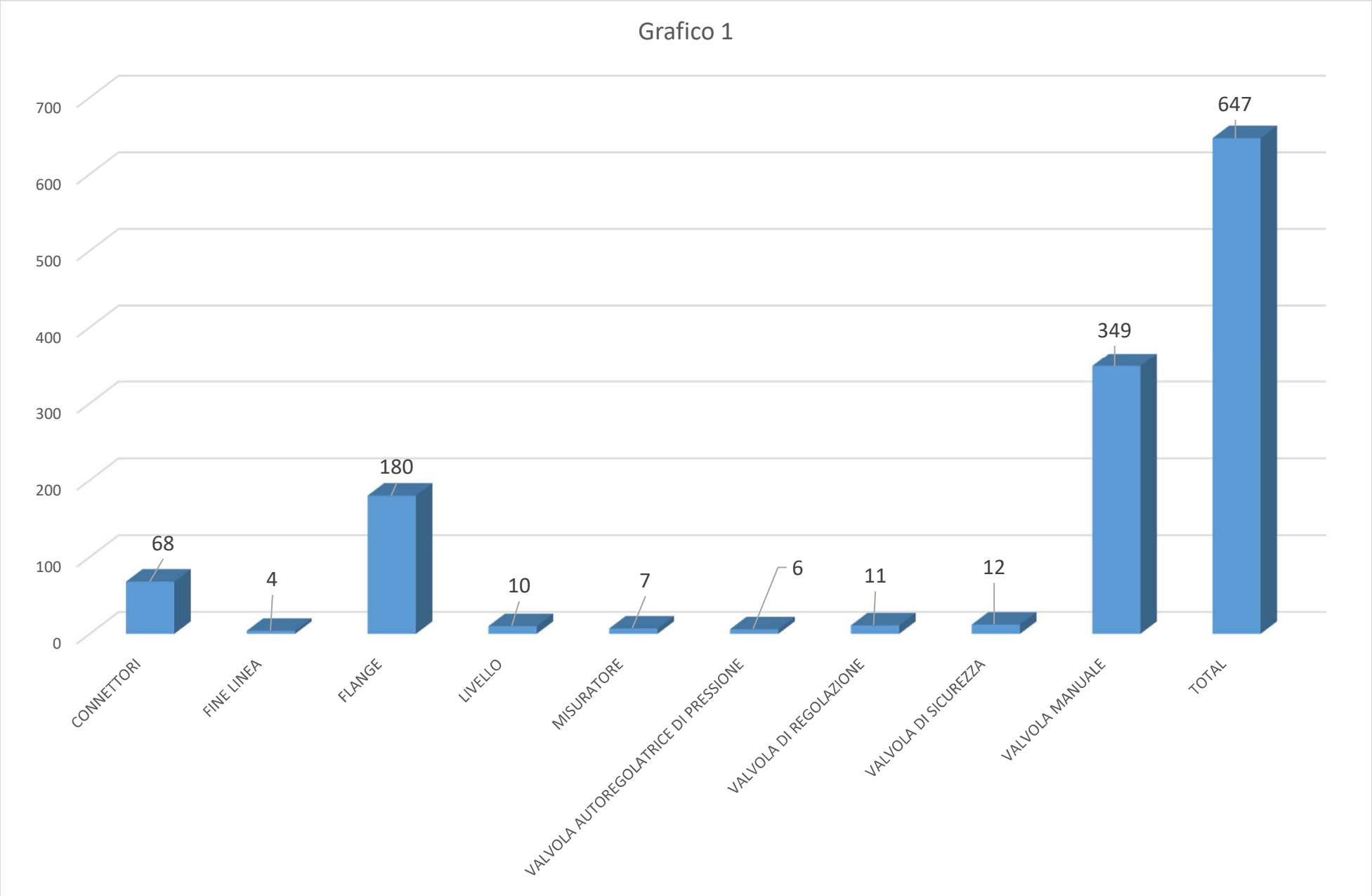
Grafico 1
700
600
500
400
300
200
100
0
68
4
180
10
7
6
11
12
349
647
CONNETTORI
FINE LINEA
FLANGE
LIVELLO
MISURATORE
VALVOLA AUTOREGOLATRICE DI PRESSIONE
VALVOLA DI REGOLAZIONE
VALVOLA DI SICUREZZA
VALVOLA MANUALE
TOTAL

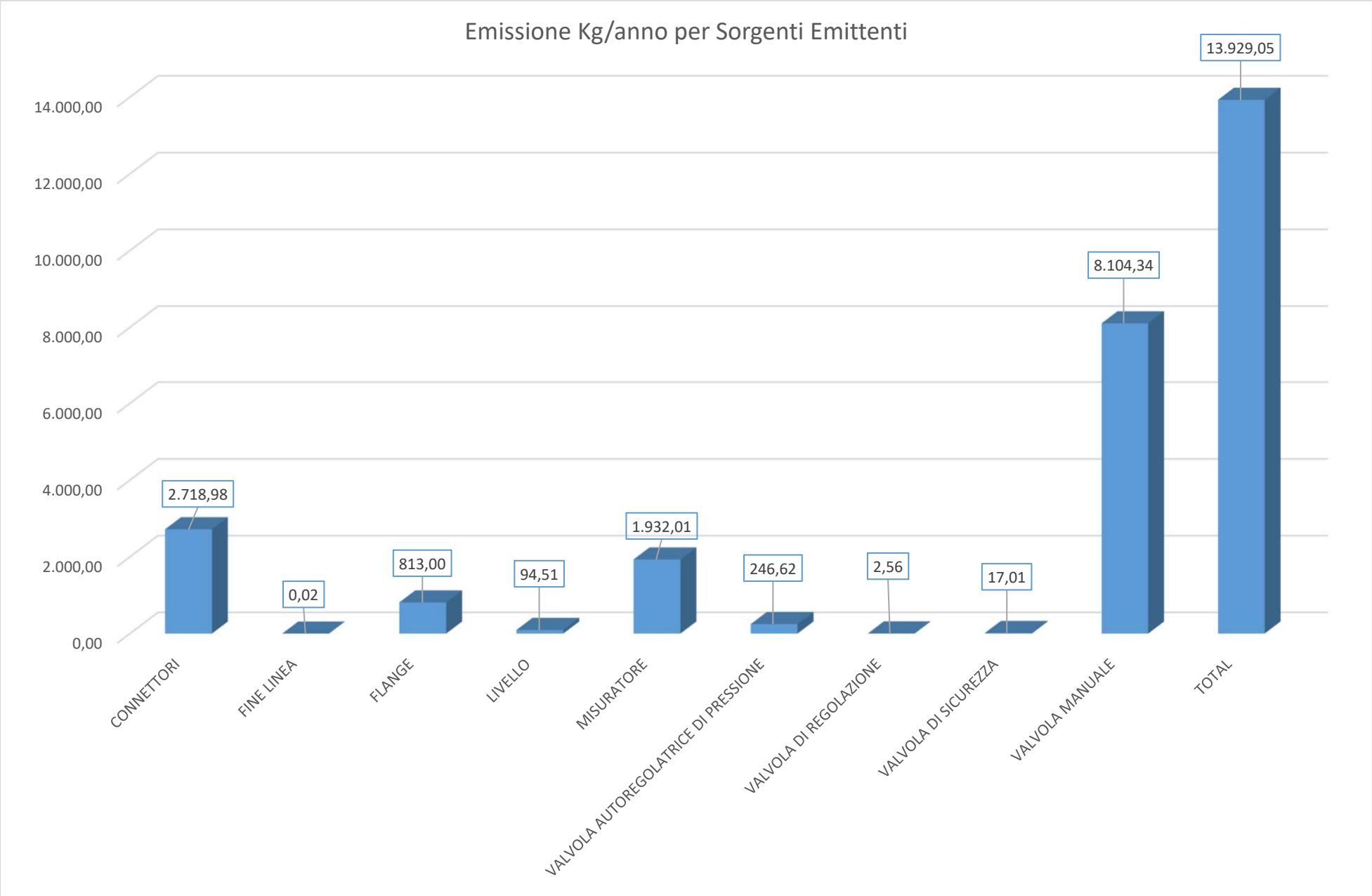
Emissione Kg/anno per Sorgenti Emittenti
14.000,00
12.000,00
10.000,00
8.000,00
6.000,00
4.000,00
2.000,00
0,00
2.718,98
0,02
813,00
94,51
1.932,01
246,62
2,56
17,01
8.104,34
13.929,05
CONNETTORI
FINE LINEA
FLANGE
LIVELLO
MISURATORE
VALVOLA AUTOREGOLATRICE DI PRESSIONE
VALVOLA DI REGOLAZIONE
VALVOLA DI SICUREZZA
VALVOLA MANUALE
TOTAL

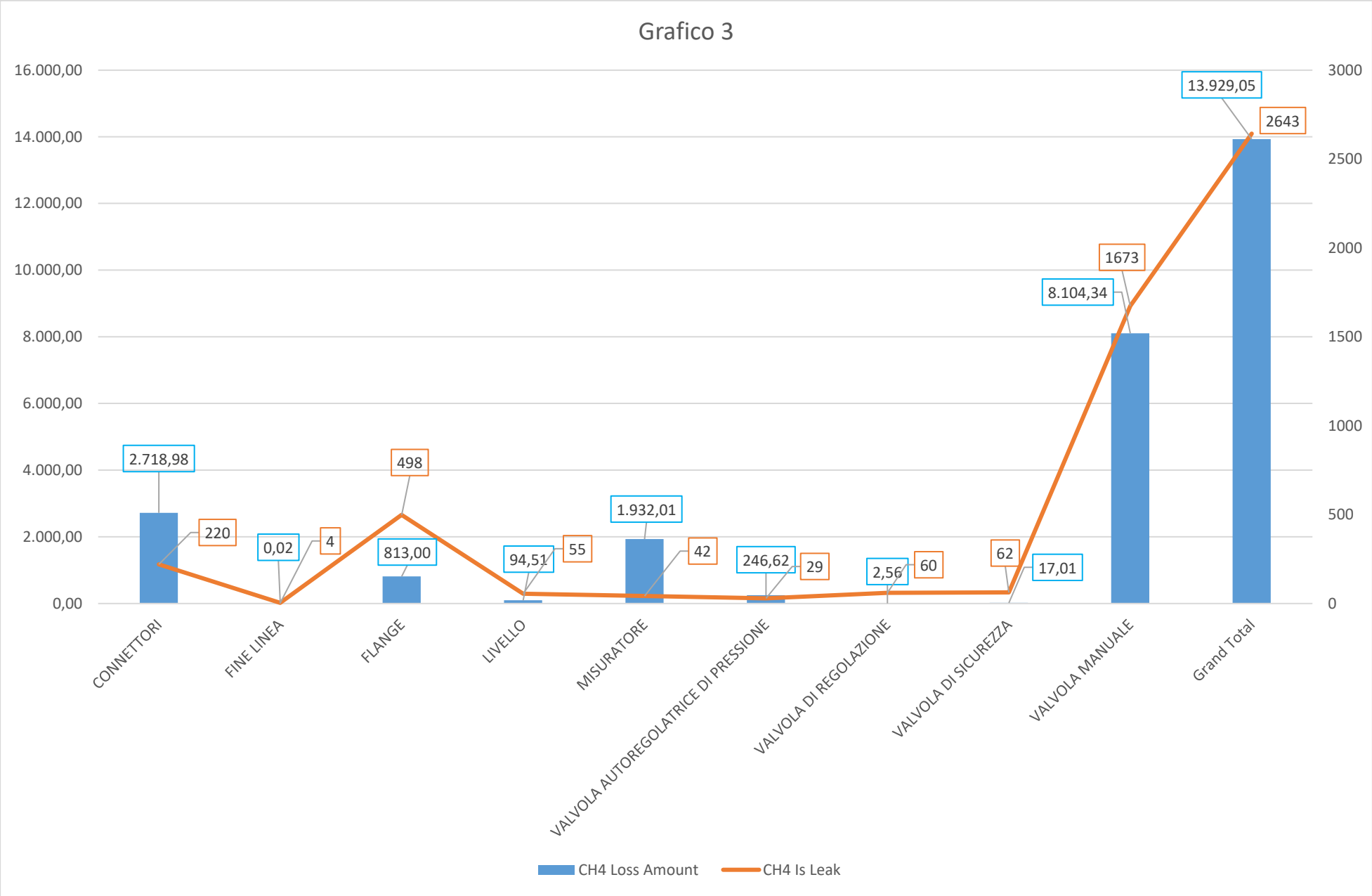
Grafico 3
16.000,00
14.000,00
12.000,00
10.000,00
8.000,00
6.000,00
4.000,00
2.000,00
0,00
3000
2500
2000
1500
1000
500
0
2.718,98
220
0,02
4
498
813,00
94,51
55
1.932,01
42
246,62
29
2,56
60
62
17,01
8.104,34
1673
13.929,05
2643
CONNETTORI
FINE LINEA
FLANGE
LIVELLO
MISURATORE
VALVOLA AUTOREGOLATRICE DI PRESSIONE
VALVOLA DI REGOLAZIONE
VALVOLA DI SICUREZZA
VALVOLA MANUALE
Grand Total
CH4 Loss Amount
CH4 Is Leak

6 SEGNALAZIONE DELLE SORGENTI DI EMISSIONE FUORI SOGLIA

ORION S.r.l.

A: Via A. Volta, 25/b - 35030 Veggiano (PD) - Italy
P: +39 049 9006.911 - F: +39 049 9006939
E: info@orion-srl.it - W: www.orion-srl.it

Spett.le Tirreno Power Spa
CENTRALE TORREVALDALIGA SUD

c.a. Giorgia Del Piano

Fabio Pascucci

Francesco Paoletti

Oggetto: Segnalazioni sorgenti emittenti fuori soglia

Si comunica che durante i rilevamenti dei giorni 20, 21, 22, 23 Giugno 2022 delle emissioni fuggitive si sono individuati i seguenti componenti con emissioni superiori alla soglia di 10.000 ppmV di metano e precisamente:

Data rilevamento:21/06/2022

1) Dalla Flangia in della Valvola manuale di sezionamento inferiore dell'indicatore di livello LI103
Sezione: 01: SISTEMA METANO FILTRAZIONE E MISURA
(01)_P12TV1722004_1_1_2357.tpd
N° Identificativo 1035
Rilevamento: 10.000 ppmV

Data rilevamento:21/06/2022

2) Dal premistoppa della Valvola manuale di sezionamento dell'indicatore di pressione PI381
Sezione: 01 : SISTEMA METANO FILTRAZIONE E MISURA
(01)_P12TV1722004_1_1_2357.tpd
N° Identificativo: 1030
Rilevamento: 11.000 ppmV

Data rilevamento: 21/06/2022

3) Dalla Flangia in della Valvola manuale di sezionamento dello stacco per bonifica
Sezione: 02 : SISTEMA METANO FILTRAZIONE E RIDUZIONE TG
(2)_P12TV1722104.tpd
N° Identificativo: 1142
Rilevamento: 10.000 ppmV

Data rilevamento: 21/06/2022

4) Dal premistoppa della Valvola manuale di sezionamento della linea di drenaggio a monte del dreno
Sezione: 02: SISTEMA METANO FILTRAZIONE E RIDUZIONE TG
(2)_P12TV1722104.tpd
N° Identificativo: 1157
Rilevamento: 10.000 ppmV

Data rilevamento:21/06/2022

5) Dal tappo della Valvola manuale di sezionamento dello stacco per bonifica
Sezione: 02 : SISTEMA METANO FILTRAZIONE E RIDUZIONE TG
(2)_P12TV1722104.tpd
N° Identificativo: 1176
Rilevamento: 10.000 ppmV

Data rilevamento:22/06/2022

6) Dal raccordo del Trasmettitore di pressione differenziale NI 718X
Sezione: 02 : SISTEMA METANO FILTRAZIONE E RIDUZIONE TG
(2)_P12TV1722104.tpd
N° Identificativo: 1215
Rilevamento: >50.000 ppmV

Data rilevamento:22/06/2022

7) Dal tappo della Valvola manuale di sezionamento dello stacco per bonifica
Sezione: 02 : SISTEMA METANO FILTRAZIONE E RIDUZIONE TG
(2)_P12TV1722104.tpd
N° Identificativo: 1237
Rilevamento: >50.000 ppmV

Data rilevamento:22/06/2022

8) Dallo sfiato della Valvola monitor autoregolatrice di pressione (PV) FX727X
Sezione: 02 : SISTEMA METANO FILTRAZIONE E RIDUZIONE TG
(2)_P12TV1722104.tpd
N° Identificativo: 1240
Rilevamento: 10.000 ppmV

Data rilevamento:22/06/2022

9) Dalla flangia in della Valvola manuale di sezionamento dello stacco per bonifica
Sezione: 02 : SISTEMA METANO FILTRAZIONE E RIDUZIONE TG
(2)_P12TV1722104.tpd
N° Identificativo: 1264
Rilevamento: 10.000 ppmV

Data rilevamento:22/06/2022

10) Dalla flangia in della Valvola manuale di sezionamento dell'indicatore di pressione allarmato PS NI721X03
Sezione: 02 : SISTEMA METANO FILTRAZIONE E RIDUZIONE TG
(2)_P12TV1722104.tpd
N° Identificativo: 1312
Rilevamento: >50.000 ppmV

Data rilevamento:22/06/2022

11) Dal premistoppa della Valvola manuale di sezionamento a monte dei misuratori di pressione differenziale PDI/PDS
Sezione: 03 : SISTEMA METANO LINEA ALIMENTAZIONE TG
(3)_P12TV02476.tpd
N° Identificativo: 1562
Rilevamento: 12.000 ppmV

Data rilevamento:22/06/2022

12) Dal boccaporto della Flangia di testa del filtro
Sezione: 03 : SISTEMA METANO LINEA ALIMENTAZIONE TG
(3)_P12TV02476.tpd
N° Identificativo: 1553
Rilevamento: 11.000 ppmV

Data rilevamento:22/06/2022

13) Dalla flangia in della Valvola manuale di sezionamento superiore del trasmettitore di livello LS NH713B0
Sezione: 03 : SISTEMA METANO LINEA ALIMENTAZIONE TG
(3)_P12TV02476.tpd
N° Identificativo: 1636
Rilevamento: 11.000 ppmV

Data rilevamento:22/06/2022

14) Dal premistoppa della Valvola manuale di sezionamento dello spurgo dell'asta misuratori di livello LI/LS
Sezione: 03 : SISTEMA METANO LINEA ALIMENTAZIONE TG
(3)_P12TV02476.tpd
N° Identificativo: 1490
Rilevamento: 11.000 ppmV

Data rilevamento:22/06/2022

15) Dal premistoppa della Valvola manuale di sezionamento superiore del trasmettitore di livello LS NH714A
Sezione: 03 : SISTEMA METANO LINEA ALIMENTAZIONE TG
(3)_P12TV02476.tpd
N° Identificativo: 1462
Rilevamento: >50.000 ppmV

Data rilevamento:22/06/2022

16) Dal premistoppa della Valvola manuale di sezionamento a valle dei misuratori di pressione differenziale PDI/PDS
Sezione: 03 : SISTEMA METANO LINEA ALIMENTAZIONE TG
(3)_P12TV02476.tpd
N° Identificativo: 1509
Rilevamento: 11.000 ppmV

Data rilevamento:22/06/2022

17) Dalla testa della Flangia di testa del filtro
Sezione: 03 : SISTEMA METANO LINEA ALIMENTAZIONE TG
(3)_P12TV02476.tpd
N° Identificativo: 1497
Rilevamento: 11.000 ppmV

Data rilevamento:22/06/2022

18) Dal premistoppa della Valvola manuale di sezionamento dell'indicatore di pressione PI RL723B
Sezione: 03 : SISTEMA METANO LINEA ALIMENTAZIONE TG
(3)_P12TV02476.tpd
N° Identificativo: 1510
Rilevamento: >50.000 ppmV

Data rilevamento:22/06/2022

19) Dal manifold
Sezione: 03 : SISTEMA METANO LINEA ALIMENTAZIONE TG
(3)_P12TV02476.tpd
N° Identificativo: 1680
Rilevamento: 12.000 ppmV

Data rilevamento:23/06/2022

20) Dal premistoppa della Valvola manuale di sezionamento dello spurgo dell'asta misuratori di livello LI/LS
Sezione: 03 : SISTEMA METANO LINEA ALIMENTAZIONE TG
(3)_P12TV02476.tpd
N° Identificativo: 1380
Rilevamento: 20.000 ppmV

Data rilevamento:23/06/2022

21) Dalla flangia out della Valvola manuale di sezionamento dello spurgo del trasmettitore di livello LS NH713B02
Sezione: 03 : SISTEMA METANO LINEA ALIMENTAZIONE TG
(3)_P12TV02476.tpd
N° Identificativo: 1432
Rilevamento: 11.000 ppmV

Data rilevamento:23/06/2022

22) Dal premistoppa della Valvola manuale di sezionamento dell'indicatore di pressione PI RL723A
Sezione: 03 : SISTEMA METANO LINEA ALIMENTAZIONE TG
(3)_P12TV02476.tpd
N° Identificativo: 1346
Rilevamento: 30.000 ppmV

ORION S.r.l.

A: Via A. Volta, 25/b - 35030 Veggiano (PD) - Italy
P: +39 049 9006.911 - F: +39 049 9006939
E: info@orion-srl.it - W: www.orion-srl.it

Data rilevamento:23/06/2022

23) Dal manifold
Sezione: 03 : SISTEMA METANO LINEA ALIMENTAZIONE TG
(3)_P12TV02476.tpd
N° Identificativo: 1677
Rilevamento: >50.000 ppmV

Data rilevamento:23/06/2022

24) Dal manifold
Sezione: 03 : SISTEMA METANO LINEA ALIMENTAZIONE TG
(3)_P12TV02476.tpd
N° Identificativo: 1678
Rilevamento: 11.000 ppmV

Data rilevamento:23/06/2022

25) Dallo stacco del Pozzetto termometrico indicatore di temperatura TI170
Sezione: 01 : SISTEMA METANO FILTRAZIONE E MISURA
(01)_P12TV1722004_1_1_2357.tpd
N° Identificativo: 1008
Rilevamento: 22.000 ppmV

Rimaniamo a Vostra completa disposizione per ulteriori informazioni.

Distinti saluti
ELISA ANSALDI

ORION S.r.l.

A: Via A. Volta, 25/b - 35030 Veggiano (PD) - Italy
P: +39 049 9006.911 - F: +39 049 9006939
E: info@orion-srl.it - W: www.orion-srl.it

Capitale Sociale	Euro 1.000.000i.v.
Registro Imprese	PD 02149470284
P. IVA e Cod.Fisc.	02149470284
R.E.A.	211706